Form No. 3369-108 Rev A

Road Certification and Light Kit

EU Groundsmaster® 360 Multi-Purpose Machine with Cab

Model No. 30516

Installation Instructions

Installation

Loose Parts

Use the chart below to verify that all parts have been shipped.

Procedure	Description	Qty.	Use
1	No parts required	–	Initial Preparation
2	No parts required	–	Floor plate access hole
3	Column bracket assembly Horn assembly Column bracket mount Carriage screw, 3/8 inch x 1 inch Flange nut, 3/8 inch Column cover Screw	1 1 1 2 2 1 2	Install the switch column assembly
4	Head light assembly R.H. Head light assembly L.H. Flange head screw, 3/8 x 1 inch Flange nut, 3/8 inch Headlight shield R.H. Headlight shield L.H. Screw, 1/4 x 5/8 inch	1 1 4 4 1 1 8	Install the head lights
5	Horn assembly Screw, 5/16 x 3/4 inch Flange head nut, 5/16 inch	1 1 1	Install the horn
6	Rear lamp assembly - L.H. Rear lamp assembly - R.H. Washer head screw, 3/8 x 3/4 inch	1 1 4	Install the rear lamps
7	Grommet Cable tie, 7–1/4 inch (184 mm) Cable tie, 14–1/2 inch (368 mm)	1 13 2	Connect the wire harness
8	No parts required	–	Final Procedures

Media and Additional Parts

Description	Qty.	Use
Installation instructions	1	Use to install kit
Parts catalog	1	Use to reference part numbers

© 2011—The Toro® Company
8111 Lyndale Avenue South
Bloomington, MN 55420

Register at www.Toro.com.

Original Instructions (EN)
Printed in the USA.
All Rights Reserved

1

Initial Preparation

No Parts Required

Procedure

1. Park the machine on a level surface, stop the engine, engage the parking brake and remove the key from the ignition switch.
2. Disconnect the negative (–) battery cable from the battery.

⚠ WARNING

Wear safety goggles and rubber gloves when working with batteries. Since the gases are explosive, keep open flames and electrical spark away from batteries. Do not smoke.

3. Press the steering column pedal down, pivot the steering tower forward as far as possible and then release the pedal
4. Move the seat latch, located on the left side of the seat, rearward to unlatch the seat and pull forward on the top of the seat until the seat latch catches supporting seat plate (Figure 1).

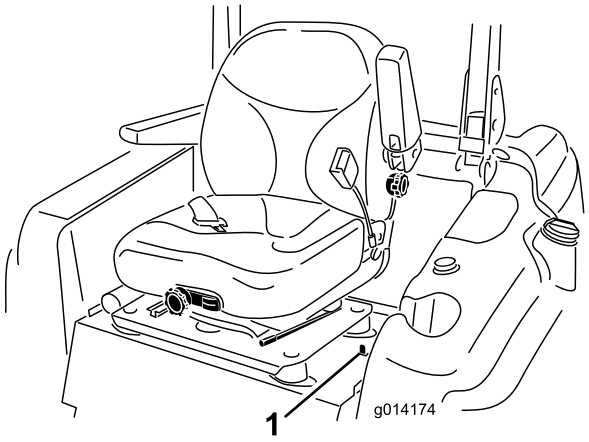

Figure 1

1. Seat latch

5. Raise and secure the hood as follows:
   - Release the hood latches.
   - Lift up on the hood until the prop rod can be positioned behind the frame tube (Figure 2).

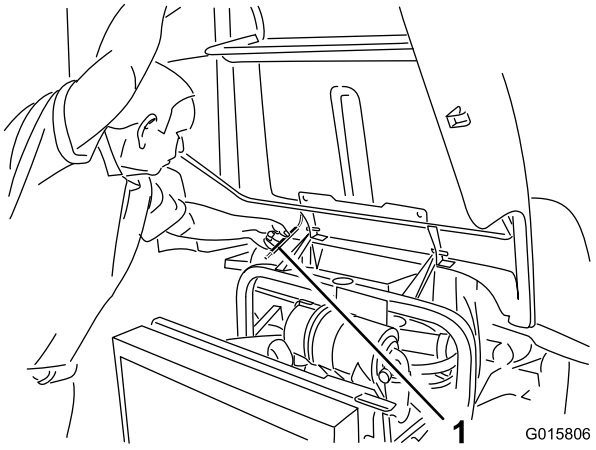

Figure 2

1. Prop rod

   - Lower the hood until the rod is in front of and resting against the frame tube.

2

Floor Plate Access Hole

No Parts Required

Procedure

1. Remove the knockout plug, located between the brake pedal and the steering column in the floor plate (Figure 3). If the floor plate does not have a knock out plug, proceed to the next step for drilling instructions.

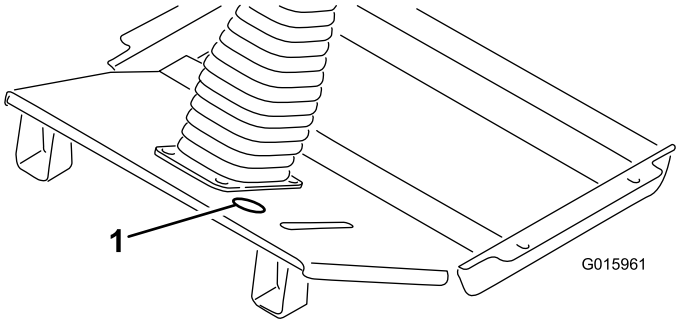

Figure 3

1. Knockout plug location

2. Using the dimensions in Figure 4, locate, mark and drill a 2 inch (51 mm) diameter hole in the floor plate.

   Note: When drilling through the floor plate, use caution not to hit the hydraulic line directly under the hole location.

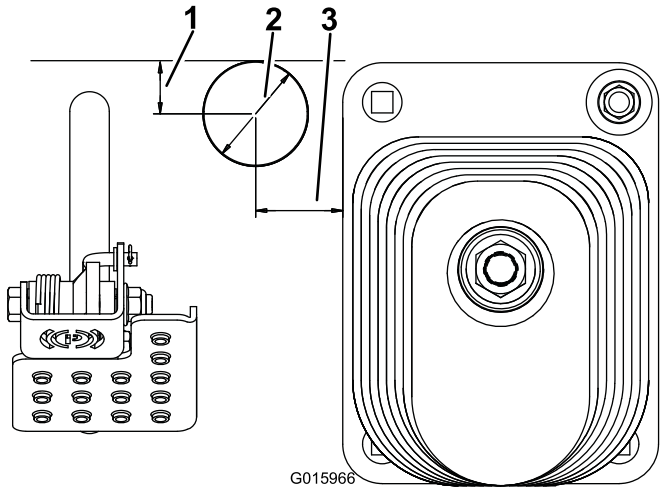

Figure 4

1. 1 inch (25 mm)
2. 2 inch diameter (51 mm)
3. 1–5/8 inches (41 mm)

3

Installing the Switch Column Assembly

Parts needed for this procedure:

1	Column bracket assembly
1	Horn assembly
1	Column bracket mount
2	Carriage screw, 3/8 inch x 1 inch
2	Flange nut, 3/8 inch
1	Column cover
2	Screw

Procedure

1. Mount the horn switch to the column bracket with the **rubber** horn button (Figure 5). Do not use the silver button included with the horn.
2. Mount the column bracket assembly to the rear of steering column with the column bracket mount, (2) 3/8 inch x 1 inch carriage screws and 3/8 inch flange nuts. Position the column bracket as high as possible on the steering column as shown in Figure 5. Make sure the column bracket does not interfere with the steering wheel.

   Note: Over tightening the carriage screws/flange nuts may distort the column bracket prohibiting the cover from being installed.

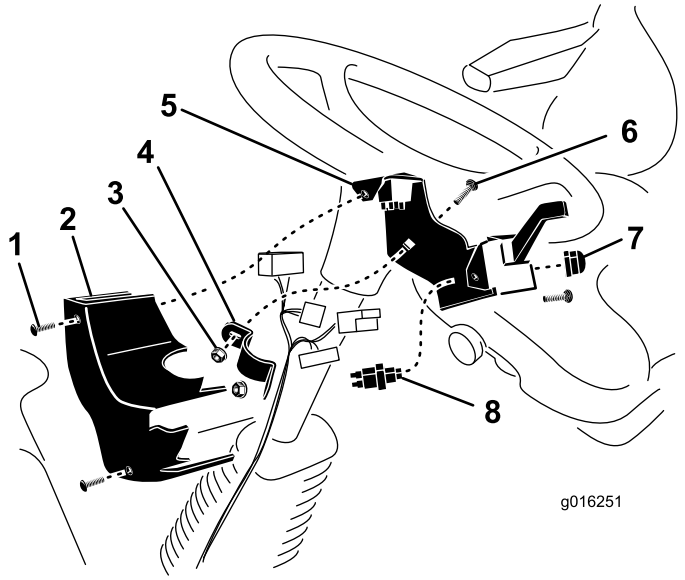

Figure 5

1. Screw (2)
2. Column cover
3. Flange nut
4. Column bracket mount
5. Column bracket assembly
6. Carriage screw
7. Horn button
8. Horn switch

3. After the wire harness is connected to the switches, mount the column cover to the column bracket (2) speed nuts with screws (Figure 5).

4

Installing the Head Lights

Parts needed for this procedure:

1	Head light assembly R.H.
1	Head light assembly L.H.
4	Flange head screw, 3/8 x 1 inch
4	Flange nut, 3/8 inch
1	Headlight shield R.H.
1	Headlight shield L.H.
8	Screw, 1/4 x 5/8 inch

Procedure

1. Mount the L.H. headlight assembly to the headlight bracket on the left front corner of the cab with (2) 3/8 x 1 inch flange head screws and 3/8 inch flange nuts (Figure 6).

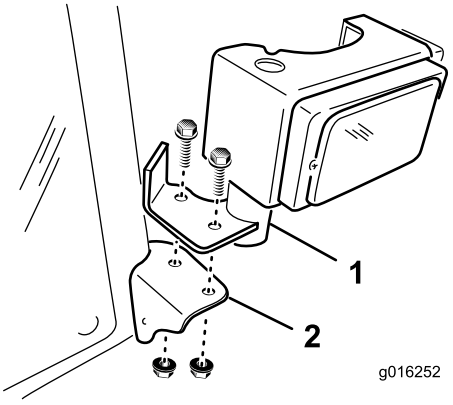

Figure 6

1. Headlight assembly
2. Headlight bracket

2. Repeat the procedure on the right side of the cab.

5

Installing the Horn

Parts needed for this procedure:

1	Horn assembly
1	Screw, 5/16 x 3/4 inch
1	Flange head nut, 5/16 inch

Procedure

1. Remove the (2) screws and washers securing the front cover to the front axle brackets (Figure 7). Remove the front cover.

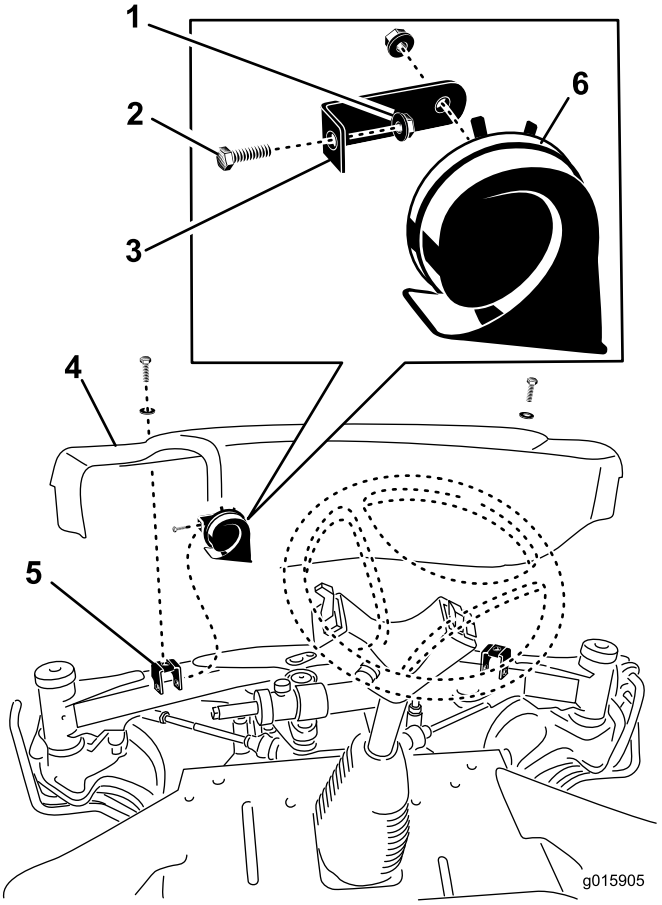

Figure 7

1. Flange head nut
2. Screw
3. Horn bracket
4. Front cover
5. Front axle bracket
6. Horn

2. Mount the horn bracket to the left cover mounting bracket with the 5/16 x 3/4 inch screw and 5/16 inch flange head nut (Figure 7).
3. Adjust the horn so the opening points down.
4. After the wire harness is connected to the horn, mount the front cover to the front axle with the (2) screws previously removed.

6

Installing the Rear Lamps

Parts needed for this procedure:

1	Rear lamp assembly - L.H.
1	Rear lamp assembly - R.H.
4	Washer head screw, 3/8 x 3/4 inch

Procedure

1. Using the mounting holes to the rear of the hood latches, secure a lamp assembly to each side of the rear frame with (2) 3/8 x 3/4 inch washer head screws (Figure 8). If the mounting holes are not in the rear frame, process to the next step

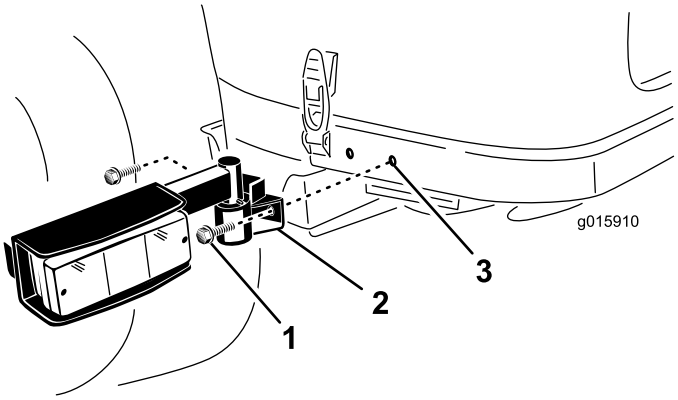

Figure 8

1. Washer head screw
2. Lamp assembly
3. Mounting hole

2. Using the dimensions shown in Figure 9, locate, mark and drill (2) .350 inch (9 mm) diameter holes in each side of the rear frame. Center the holes up and down on the frame.

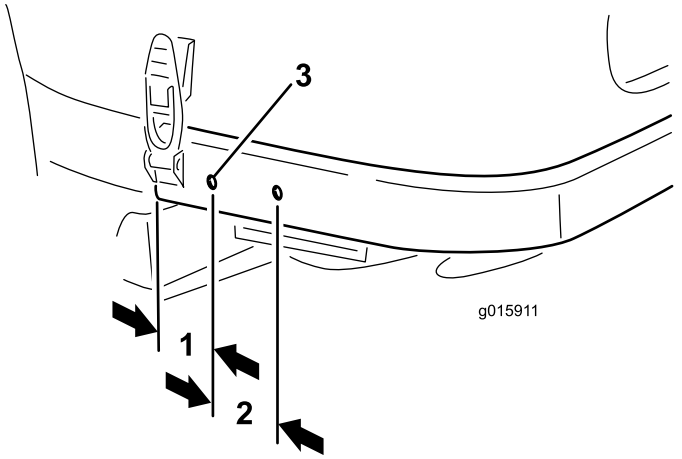

Figure 9

1. 2.25 inches (57 mm)
2. 2.55 inches (65 mm)
3. .350 inch diameter (9 mm)

7

Connecting the Wire Harness

Parts needed for this procedure:

1	Grommet
13	Cable tie, 7–1/4 inch (184 mm)
2	Cable tie, 14–1/2 inch (368 mm)

Procedure

Route, connect and secure the wire harness as follows:

- Route the end of the harness with the (5) connectors up the through the knockout hole in the floor plate (Figure 10).
- Route the harness connectors up the steering column and plug them into the appropriate connectors. Cable tie the harness to the steering column with cable ties.

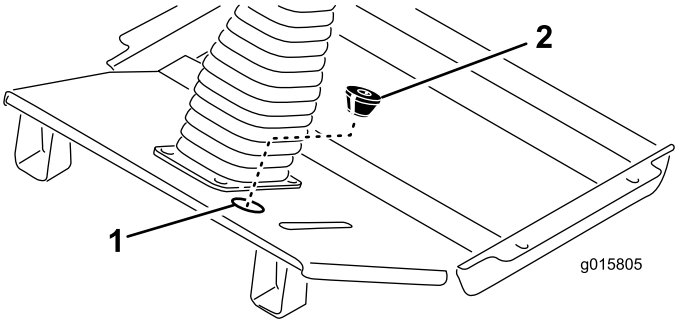

Figure 10

1. Knockout plug location
2. Grommet

- Cut a slit in the supplied grommet and cut out the bottom opening (Figure 10). With the cone end of the grommet facing down, wrap it around the harness and insert it into the knockout hole in the floor plate.
- Route the left and right head light harness connectors along the front of the platform to each head light (Figure 12).
- Plug the harness connectors into the head lights and the harness clips into the holes in the head light brackets.
- Cable tie the harness to the holes in the frame gussets.
- Mount a headlight shield to the back of each headlight with (2) 1/4 x 5/8 inch screws (Figure 11).

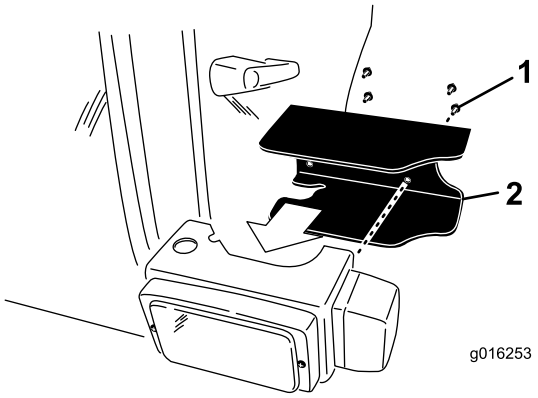

Figure 11

1. Mounting screws
2. Headlight shield

- Route the harness to horn and connect the two wires to the terminals (Figure 12).
- Following the existing harness, route the harness along the underside of the seat support bracket to the control panel on the right side of the machine.
- Remove the (2) screws securing the control panel to the tank cover.
- Raise the control panel and locate the wire harness connector labeled **Accessory** (Figure 12).
- Route the harness connector up to the accessory connector and plug it in.
- Install the control panel to the tank cover with the screws removed. Torque the screws to 25 in-lbs (2.8 N-m). **Do not over tighten the screws.**
- Route and connect the small harness ring terminal to the ground block (Figure 12).
- Route and connect the harness ring terminal to the positive (+) battery post (Figure 12).

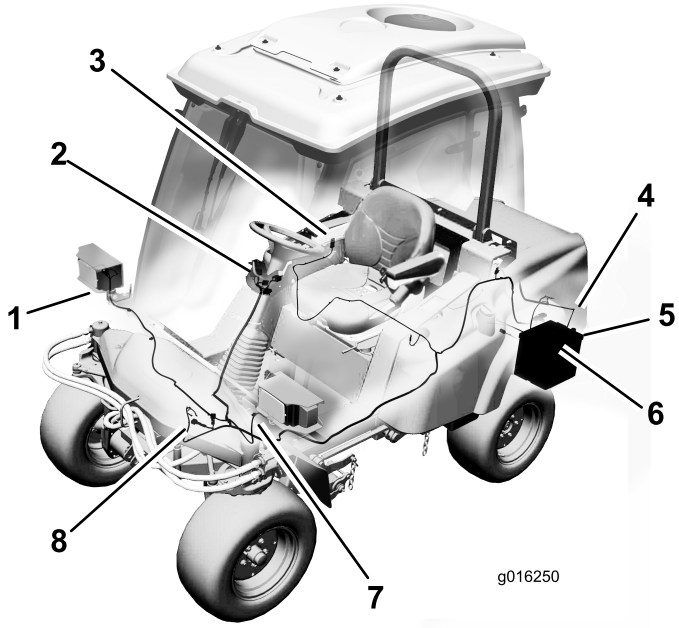

Figure 12

1. R.H. Headlight connection
2. Steering column connections
3. Accessory connection
4. Rear lamp connection (2)
5. Ground block connection
6. Battery connection
7. L.H. Headlight connection
8. Horn connection

- Route the harness along the existing harness and frame tube to the left rear lamp harness (Figure 12). Plug the harness connector into the lamp harness connector. Secure the harness to the existing harness and frame tube with cable ties.
- Route the harness along the existing harness and frame tube to the right rear lamp harness connector. Plug the harness connector into the lamp harness connector. Secure the harness to the existing harness and frame tube with cable ties.

Important: Make sure the harness is clear of all hot, sharp or moving components.

8

Final Procedures

No Parts Required

Procedure

1. Pull up on the seat latch release bar and lower the seat into the locked position.
2. Attach the negative battery cable to the battery post.
3. Raise the hood until the prop rod can be raised above the frame tube, then lower the hood. Secure the hood latches.

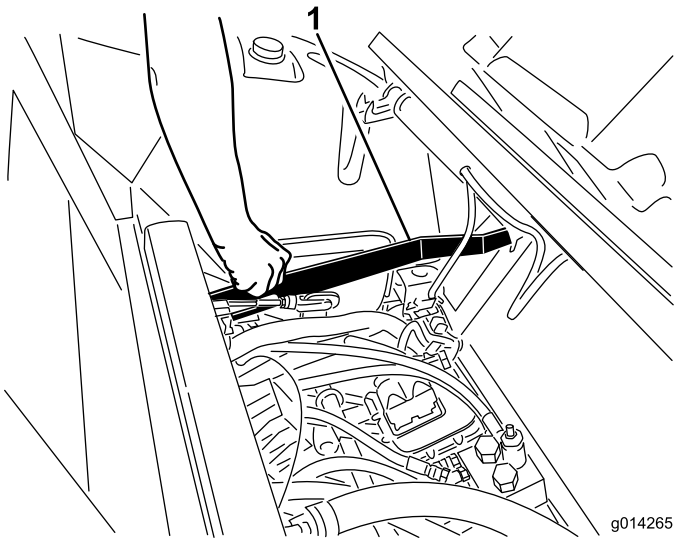

Figure 13

1. Seat latch release bar

Operation

The Road Light Kit consists of 2 front mounted head lamps, 2 combination warning/turn/tail lamps and a horn.

Light Switches

Press the front of the light switch (Figure 14) to activate the front dipped beam head lights and the rear position lights.

The rear of the switch (Figure 14) activates the optional work light.

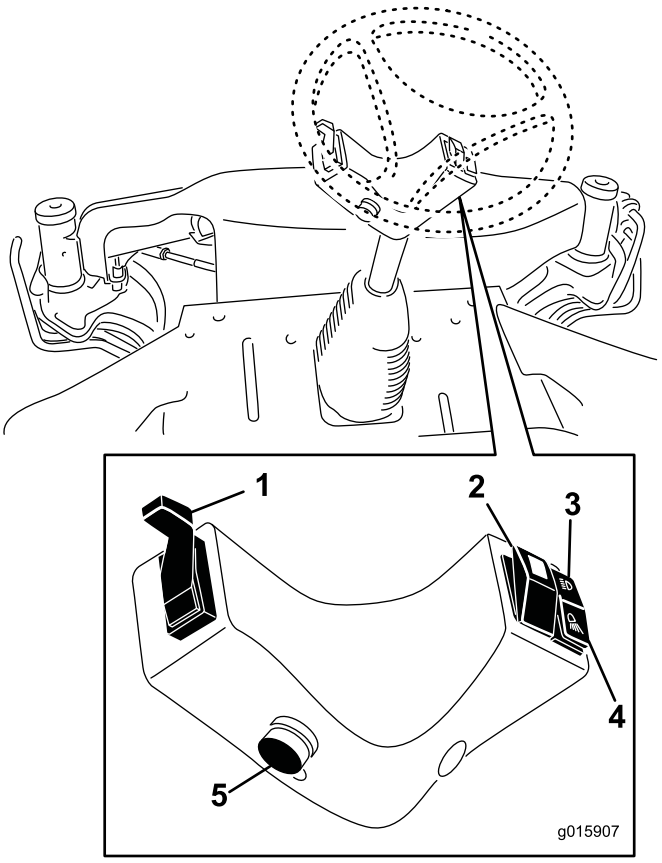

Figure 14

1. Turn signal arm
2. Activates hazard light
3. Activates front dipped beam head lights and the rear position lights.
4. Activates optional worklight
5. Horn button

Press the hazard light switch (Figure 14) to activate the front and rear flashing hazard lights.

Horn Button

Press the horn button to activate the horn (Figure 14) .

Turn Signal

Press down on the turn signal arm (Figure 14) to activate the left turn signal.

Press up on the turn signal arm (Figure 14) to activate the right turn signal.

Aiming the Headlights

Use the screws shown in Figure 15 to adjust the head lights per local standards.

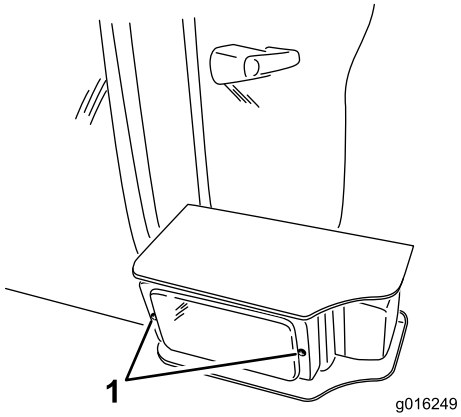

Figure 15

1. Headlight adjusting screws