Form No. 3367-185 Rev B

TORO®

Count on it.

Parts Catalog

Z Master® G3 Riding Mower

with 152cm TURBO FORCE® Side Discharge Mower

Model No. 74925TE—Serial No. 311000001 and Up

CE

Register at www.Toro.com.

Original Instructions (EN)

Ordering Replacement Parts

To order replacement parts, please supply the part number, the quantity, and the description of each part desired.

Understanding Reference Numbers

Each identified part in an illustration has a reference number. The reference number for a part also appears in the parts list, along with other information about the part.

This catalog uses two special reference number formats, one to indicate parts in a service assembly and another to indicate the quantity of a given part in an illustration.

Service Assembly Reference Numbers

Parts in service assemblies have reference numbers in the form a:b. The a represents the reference number of the entire service assembly and the b represents a sequential number unique to each part within the service assembly.

For example, a wheel assembly might be identified by reference number 6, the tire by 6:1, the valve by 6:2, and the wheel by 6:3. When you order the assembly identified by reference number 6, you receive all parts identified by reference numbers 6:1,6:2, and 6:3. However, you may also order any part individually. Reference numbers of this type appear in illustration and in parts lists.

Reference Numbers Indicating Quantity

In an illustration, if a reference number indicates more than one part, the reference number has the form nX y. The n represents the quantity of the part, the X is the multiplication symbol, and the y represents the reference number.

For example, in an illustration, the reference number 2X 37 means that two of the parts identified by reference number 37 are indicated.

List of Abbreviations

AR: as required

ASM: assembly

BBC: blade brake control

BHTF: button head thread forming

CARR: carriage

CCW: counter clockwise

CW: clockwise

DEG: degrees

DPA: Dual Point Adjustment

ECM: electronic control module

EXT: external

FH: flat head

GA: gauge

HD: heavy-duty

HF: hex flange

HH: hex head

HHF: hex head flange

HHFTF: hex head flange thread forming

HJ: hex jam

HLH: hex lag head

HOC: height-of-cut

HSBH: hex socket button head

HSFH: hex socket flat head

HSH: hex socket head

HWH: hex washer head

HWHTF: hex washer head thread forming

HYD: hydraulic

LH: left hand

LP: Liquid Propane

NI: nylon insert

NPTF: national pipe thread fine

PFH: phillips flat head

PPH: phillips pan head

PPHTF: phillips pan head thread forming

PRH: phillips round head

PTH: phillips truss head

PTO: power-take-off

RH: right hand

ROPS: roll-over protection system

RRB: rear roller brush

SFH: slotted fillister head

SHH: slotted hex head

SHWH: slotted hex washer head

SPH: slotted pan head

SQH: square head

SRH: slotted round head

STD: standard

TAP: self tapping

TTH: torx truss head

© 2011—The Toro® Company
8111 Lyndale Avenue South
Bloomington, MN 55420

Contact us at www.Toro.com.
Printed in the USA.
All Rights Reserved

Contents

Front Frame, Caster Wheel and Z Stand Assembly 4
Roll-Over Protection System Assembly No. 116-0232 6
Caster Wheel and Fork Assembly 7
Z Stand Assembly 8
Hydraulic Pump, Idler and Belt Assembly 9
Pump Ilder Assembly No. 116-1255 10
LH Hydro Assembly No. 116-1326 11
RH Hydro Assembly No. 116-1327 12
Rear Wheel and Park Brake Assembly 13
Brake Handle Assembly No. 116-1878 14
Fuel Tank Mounting Assembly 15
Fuel Tank Assembly No. 116-3979 16
Seat Mounting Assembly 17
Seat Assembly No. 116-0035 18
Motion Control Assembly 19
Fender, Console and Control Assembly 20
LH Console Assembly No. 115-7401 21
RH Console Assembly No. 115-7400 22
Electrical System Assembly 23
Deck Lift Assembly 24
Height-of-Cut Assembly No. 117-3842 26
Engine, Muffler and Clutch Assembly 27
Deck Assembly 28
Deck Decal Assembly No. 117-3800 30
Spindle Assembly No. 119-8560 31
Idler Assembly 32
Rubber Deflector Assembly No. 108-2792 33
Lever Assembly No. 107-1664 34
Attachments and Accessories 35

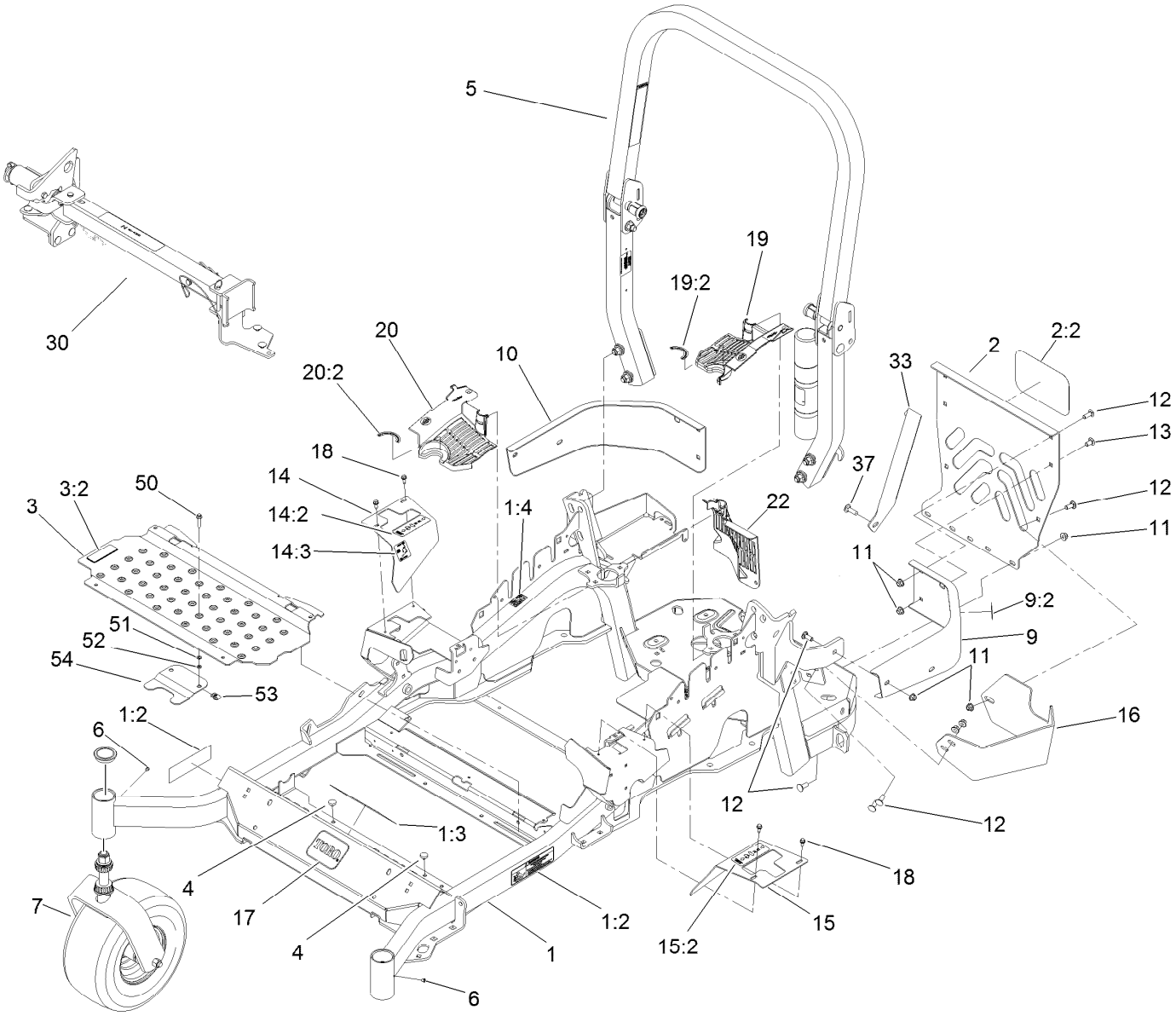

Front Frame, Caster Wheel and Z Stand Assembly

Ref.	Part Number	Qty.	Description
1	116-2159	1	Main Frame ASM
1:2	117-3888	1	Decal-Danger Slope W/ROPS
1:3	106-5517	2	Decal-Warning, Hot Surface
1:4	106-2655	2	Decal-Hazard, Pinched Finger
2	115-7410	1	Rear Guard ASM
2:2	67-7320	1	Decal
3	117-0915	1	Floorpan ASM
3:2	112-9028	1	Decal-Cover Missing
4	1-513658	2	Bumper
5	116-0232	1	ROPS ASM
6	1-811010	2	Plug
7		2	Caster Wheel ASM ●
9	117-3829	1	LH Rear Bumper ASM
9:2	106-5517	1	Decal-Warning, Hot Surface
10	116-0057-03	1	Bumper-RH
11	104-8301	11	Nut-Flange, NI
12	3231-22	7	Screw-CARR
13	3231-21	3	Screw-CARR
14	117-3832	1	RH Motion Control Cover ASM
14:2	99-8936	1	Decal-Control, Motion
14:3	114-4467	1	Decal-Parking Brake
15	117-3831	1	LH Motion Control Cover ASM
15:2	99-8936	1	Decal-Control, Motion
16	117-0908-03	1	Guard-Muffler
17	68-3640	1	Decal
18	32144-10	4	Screw-HWH
19	117-3838	1	LH Hydro Guard ASM
19:2	117-3811	1	Decal-Hydro Oil
20	117-3839	1	RH Hydro Guard ASM
20:2	117-3811	1	Decal-Hydro Oil
22	109-9058	1	Guard-Hydro, Rear RH
30		1	Z Stand ASM ●
33	117-0903-03	1	Strap
37	3231-25	1	Screw-CARR

● Not serviced separately

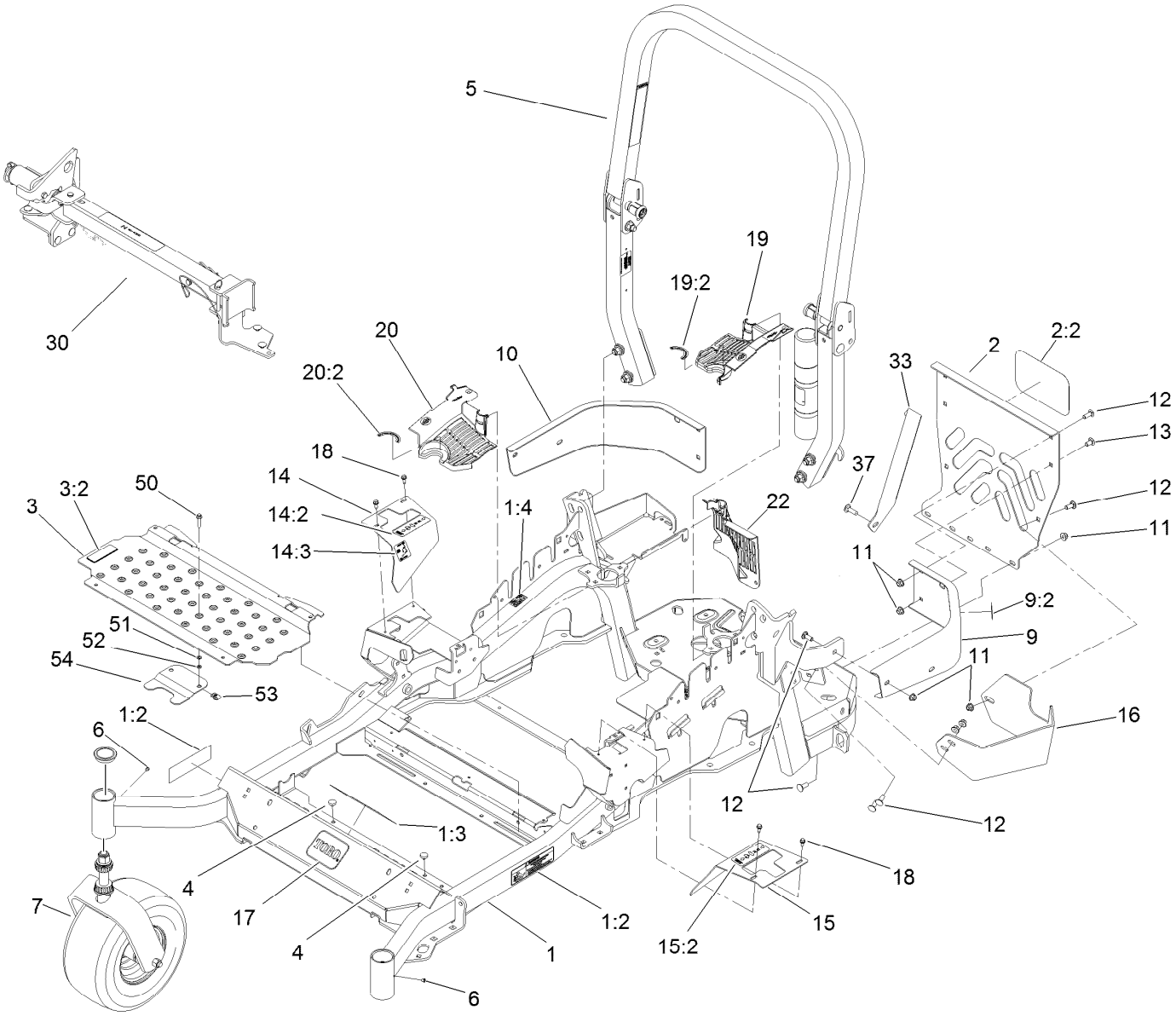

Front Frame, Caster Wheel and Z Stand Assembly (continued)

Ref.	Part Number	Qty.	Description
50	3234-21	2	Screw-HHF
51	3256-60	2	Washer-Flat
52	106-8737	2	Nut-Retainer
53	107069	2	Clip
54	119-0395-03	1	Adapter-Captive

● Not serviced separately

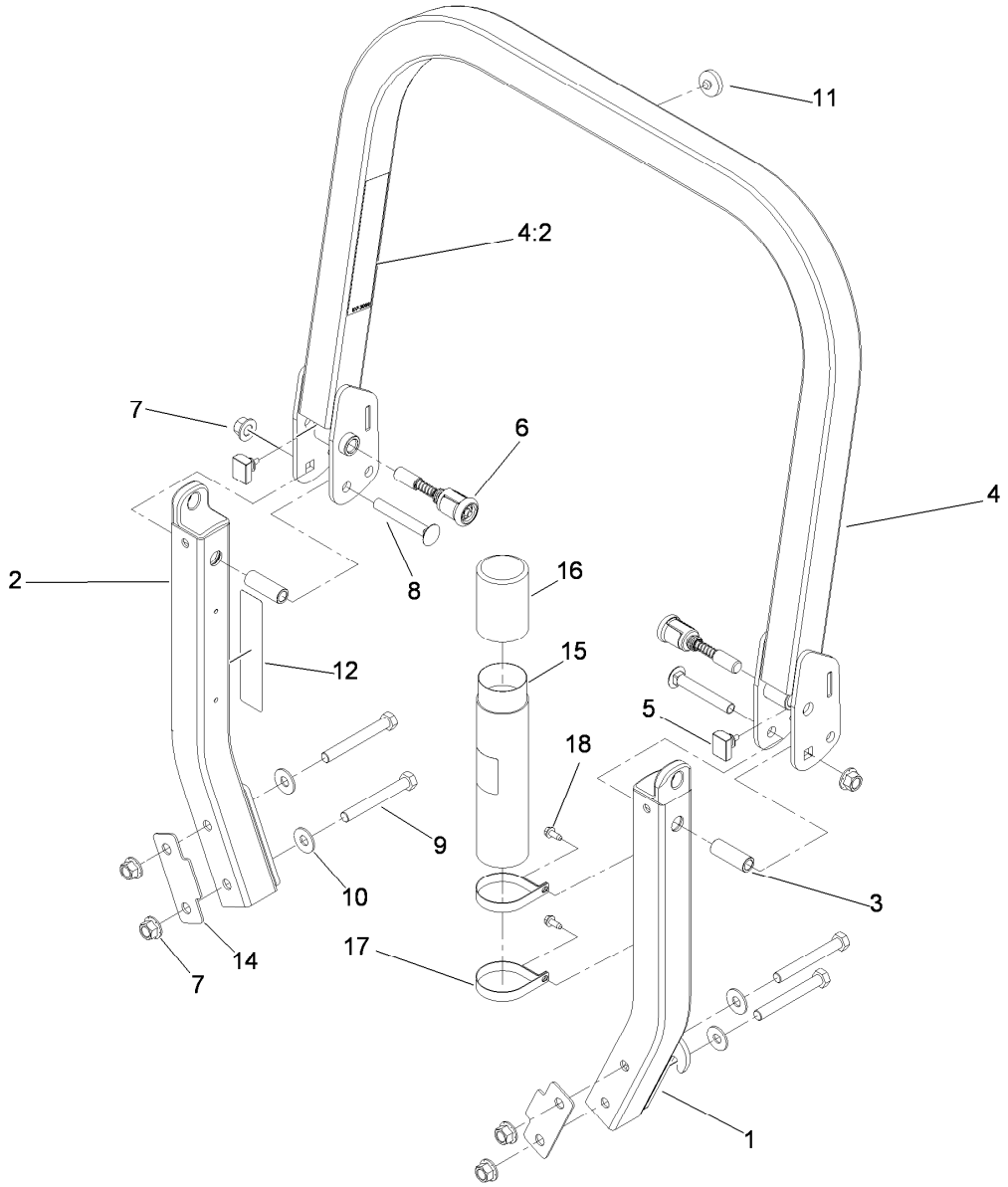

Roll-Over Protection System Assembly No. 116-0232

Ref.	Part Number	Qty.	Description
1		1	LH ROPS Leg ASM ●
2		1	RH ROPS Leg ASM ●
3	109-6653	2	Spacer
4		1	Upper ROPS ASM ●
4:2	107-3069	1	Decal-Warning, Folding ROPS
5	109-5337	2	Bumper-ROPS
6	116-0104	2	Spring Pin ASM
7	99-5107	6	Nut-Lock
8	3233-10	2	Screw-CARR
9	325-17	4	Screw-HH
10	109-9505	4	Washer-Spring
11	109-9233	1	Bumper-Push-In, Rubber
12	117-0346	1	Decal-Caution, Fuel Vent
14	116-0960	2	Spacer
15	104-7050	1	Tube-Manual
16	104-7048	1	Cap-Housing
17	107-1865	2	R-Clamp
18	32144-10	2	Screw-HWH

● Not serviced separately

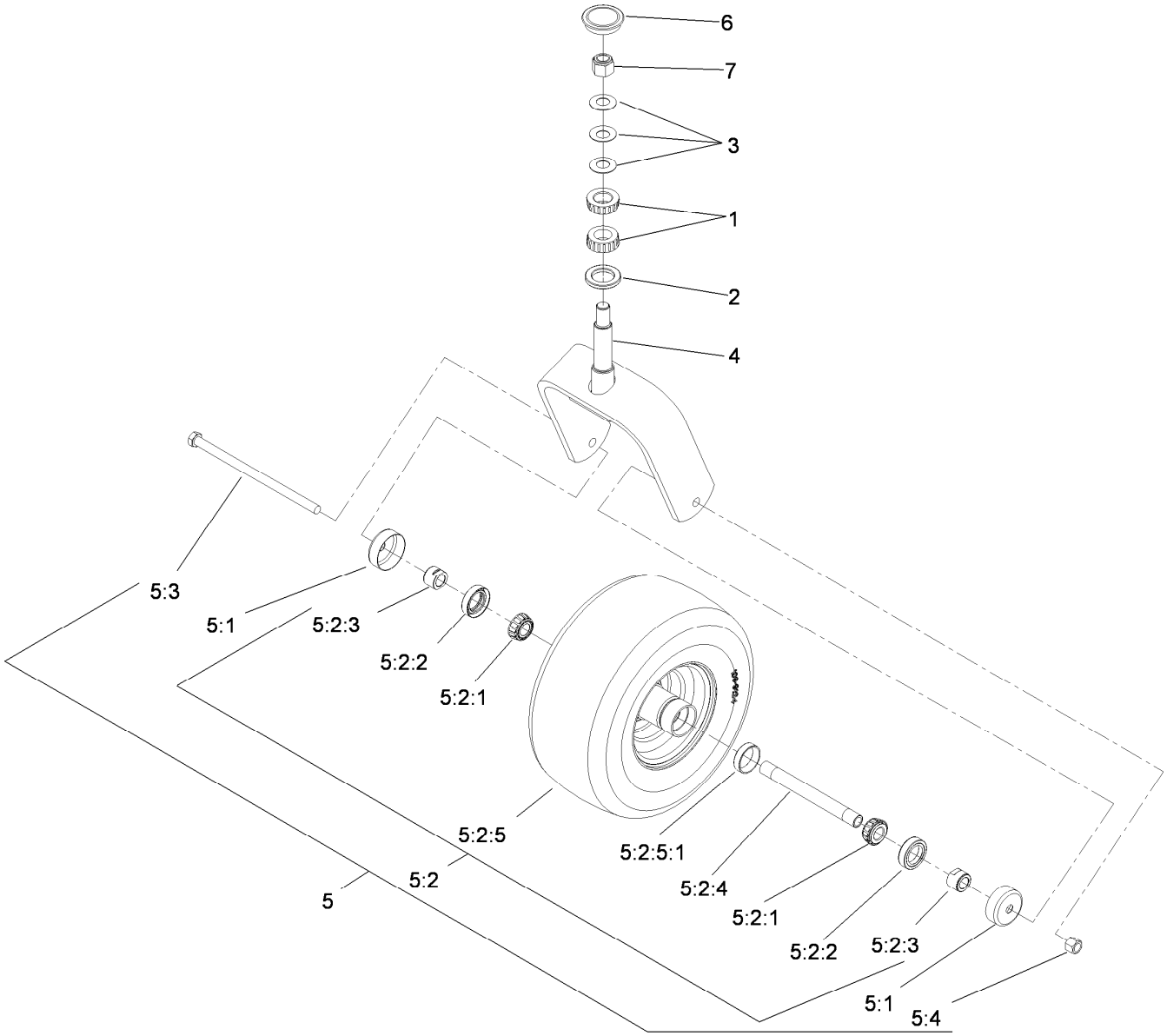

Caster Wheel and Fork Assembly

Ref.	Part Number	Qty.	Description
1	1-543509	2	Bearing-Roller, Tapered
2	1-543511	1	Seal-Grease
3	1-633508	3	Washer-Bellville
4	103-1474-01	1	Caster-Fork
5	109-9127	1	Wheel And Tire ASM
5:1	103-2768	2	Guard-Seal
5:2		1	Wheel And Tire ASM ●
5:2:1	1-633585	2	Bearing-Cone, Taper
5:2:2	103-0063	2	Seal-Caster

Ref.	Part Number	Qty.	Description
5:2:3	103-3051	2	Spacer-Nut
5:2:4	103-5156	1	Axle-Caster
5:2:5	109-9124	1	Wheel And Tire ASM
5:2:5:1	1-633584	1	Bearing-Cup
5:3	325-39	1	Screw-HH
5:4	3296-23	1	Nut-Lock, NI
6	103-4882	1	Cap-Grease
7	3296-51	1	Nut-Lock, NI

● Not serviced separately

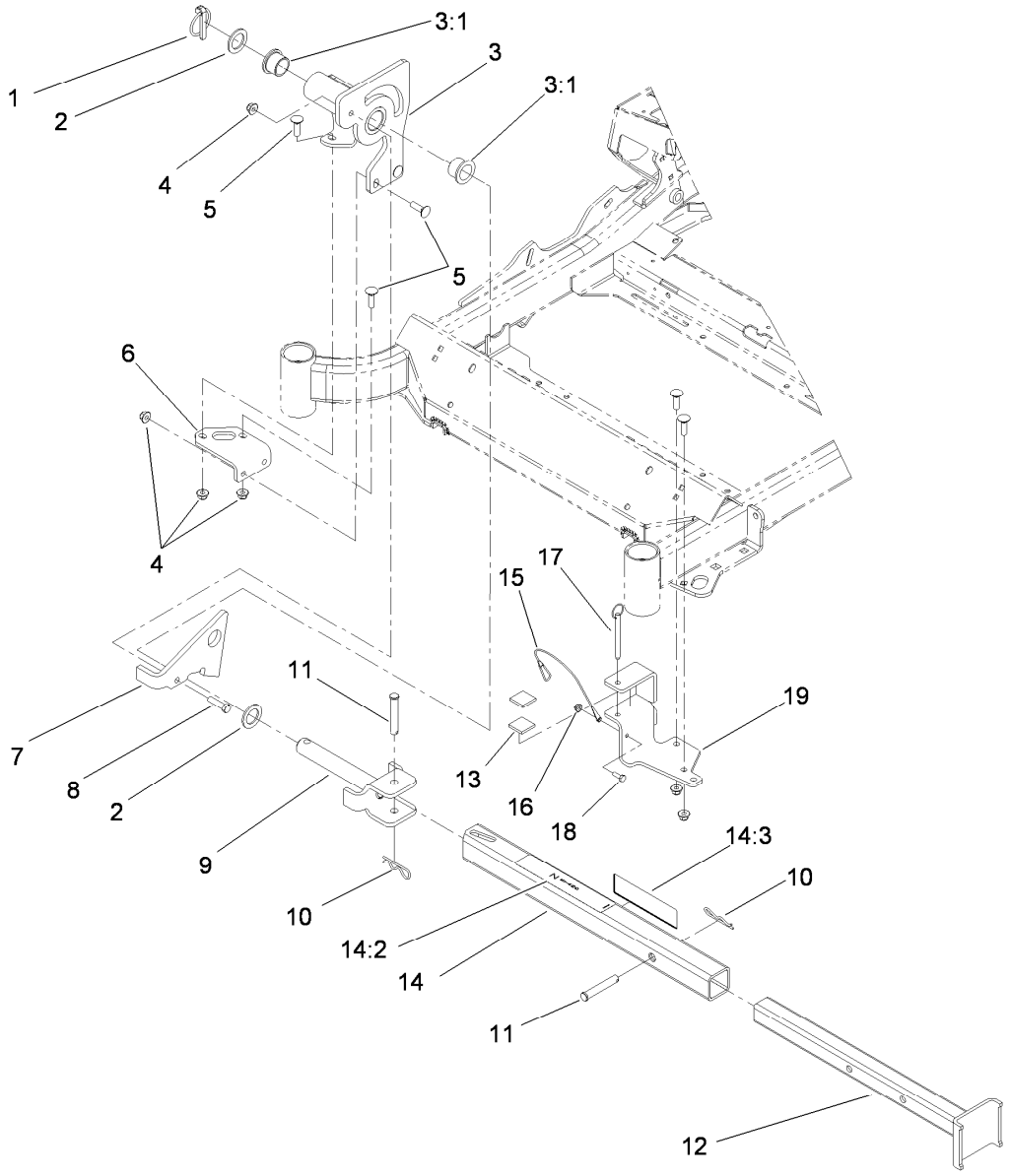

Z Stand Assembly

Ref.	Part Number	Qty.	Description
1	283-71	1	Pin-Lynch
2	3-6781	2	Washer-Thrust
3	115-3635	1	Z Stand Pivot ASM
3:1	94-1291	2	Bushing
4	104-8301	8	Nut-Flange, NI
5	3231-25	7	Screw-CARR
6	115-3619-01	1	Bracket-Pivot, Mount
7	100-9686-01	1	Bracket-Latch
8	323-8	1	Screw-HH
9	100-9692-01	1	Pivot Pin ASM
10	3290-355	2	Pin-Hair

Ref.	Part Number	Qty.	Description
11	283-55	2	Pin-Clevis
12	115-3631-01	1	Inner Tube ASM
13	115-3613	2	Cushion Rubber
14	115-3634	1	Outer Tube ASM
14:2	106-7464	1	Decal-Z Stand
14:3	107-3969	1	Decal-Warning
15	100-9385	1	Lanyard-Nylon
16	104-7201	1	Nut-HF
17	105-1647	1	Pin-Hitch, Cotterless
18	321-4	1	Screw-HH
19	115-3625-01	1	Z Stand Cradle ASM

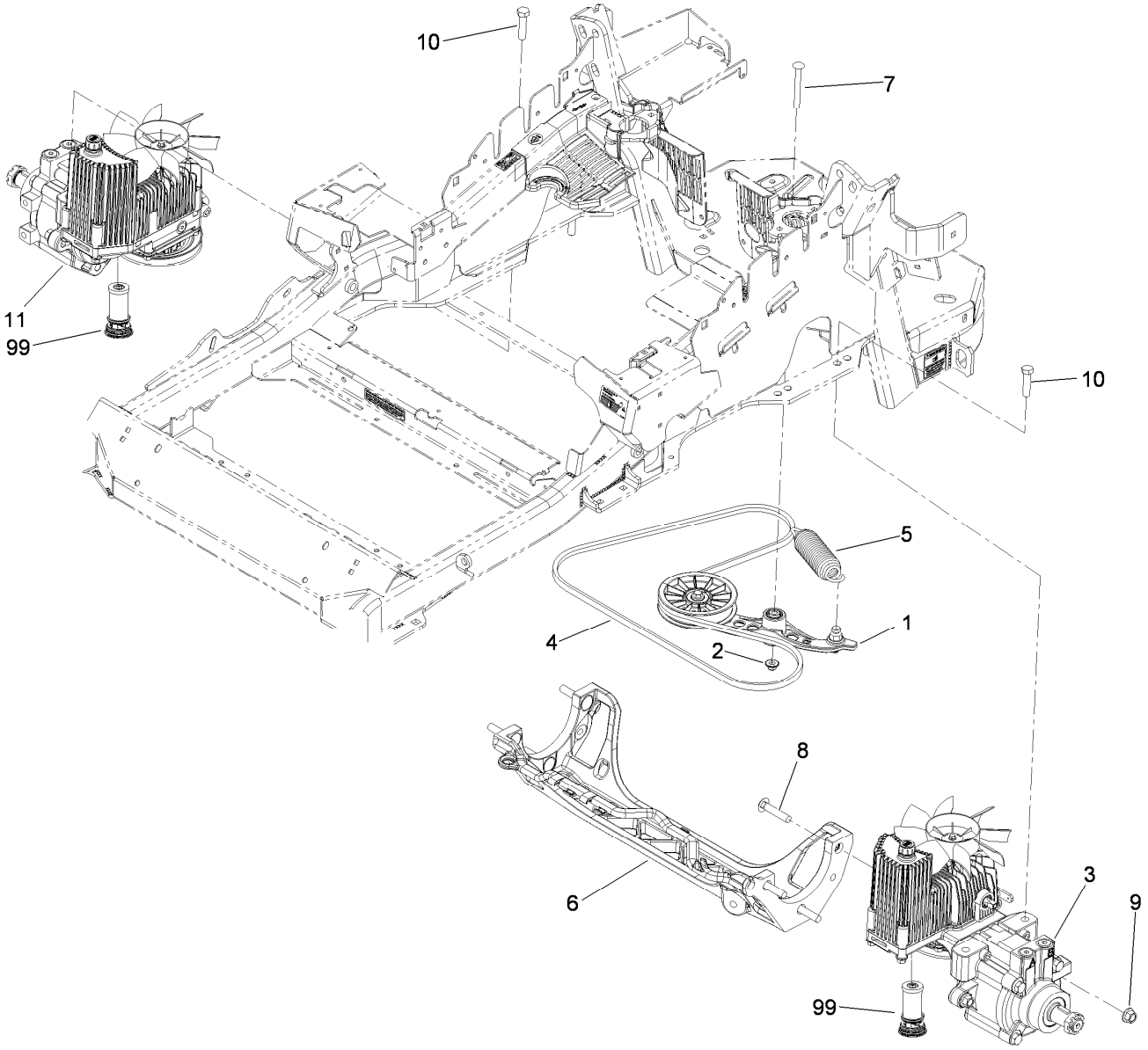

Hydraulic Pump, Idler and Belt Assembly

Ref.	*Part Number*	*Qty.*	*Description*
1	116-1255	1	Pump Idler ASM
2	109-6658	1	Nut-Flange, NI
3	116-1326	1	LH Hydro ASM (16Cc W/Shock)
4	109-3388	1	Belt
5	116-0133	1	Extension-Spring
6	109-9375	1	Cradle-Hydro
7	116-1502	1	Bolt-Shoulder, Carriage
8	3233-34	6	Screw-CARR
9	99-5107	6	Nut-Lock
10	325-8	4	Screw-HH
11	116-1327	1	RH Hydro ASM (16Cc W/Shock)
99	114-4713	1	Hypr-Oil 500 (Quart) ●
99	114-4714	1	Hypr-Oil 500 (Gallon) ●
99	114-4715	1	Hypr-Oil 500-5 (5 Gallon) ●
99	117-0390	1	Filter-Hydro

● Not illustrated

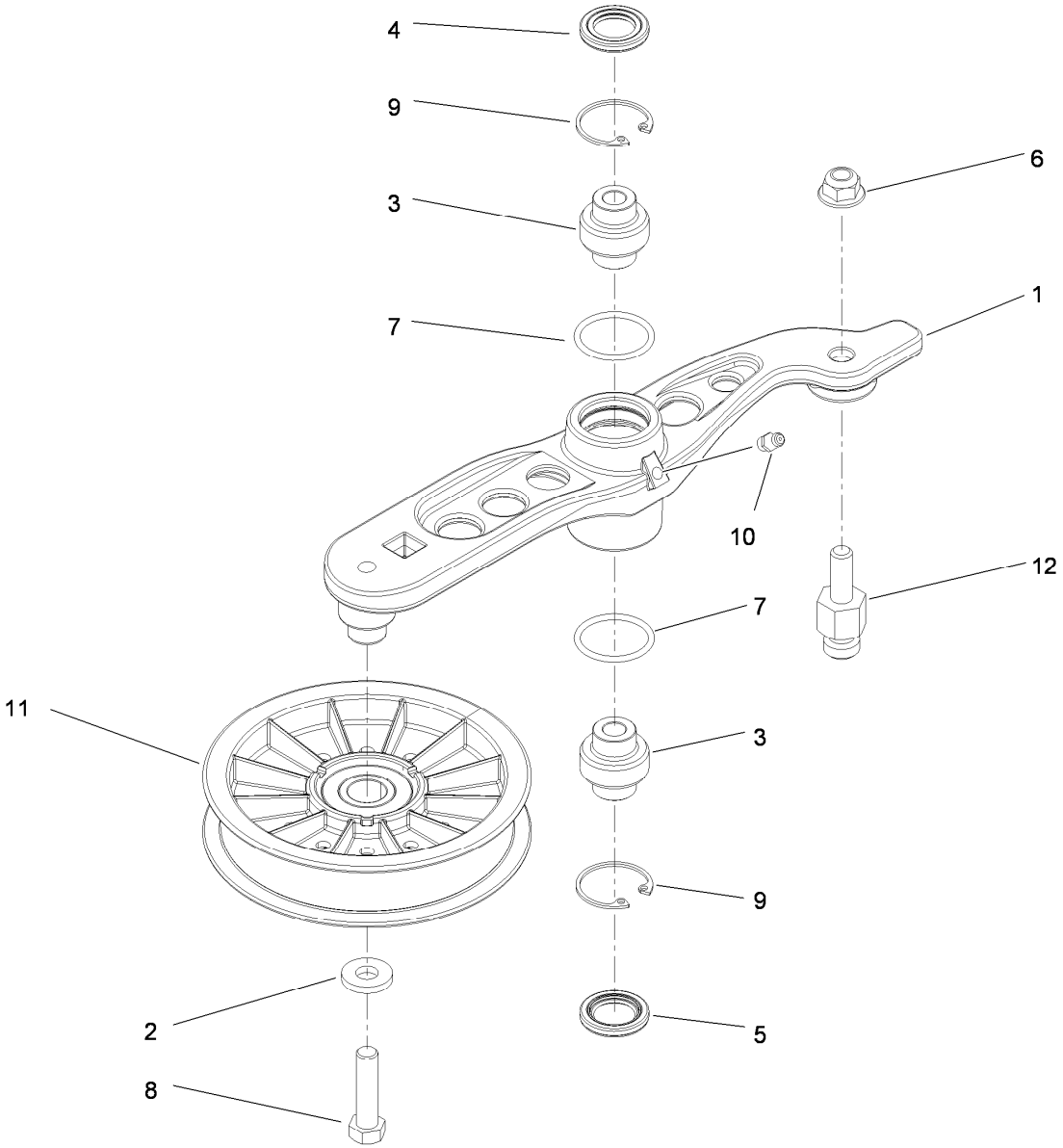

Pump Ilder Assembly No. 116-1255

Ref.	*Part Number*	*Qty.*	*Description*
1		1	Arm-Pump, Idler ●
2	43-0940	1	Spacer
3	103-3504	2	Bearing-Spherical
4	103-3505	1	Seal-Double Lip
5	103-3506	1	Seal-Single Lip
6	109-6658	1	Nut-Flange, NI
7	106-7159	2	O-Ring
8	323-8	1	Screw-HH
9	32120-10	2	Ring-Snap
10	302-19	1	Fitting-Grease
11	109-8076	1	Pulley-Idler
12	109-7399	1	Pin-Anchor, Spring

● Not serviced separately

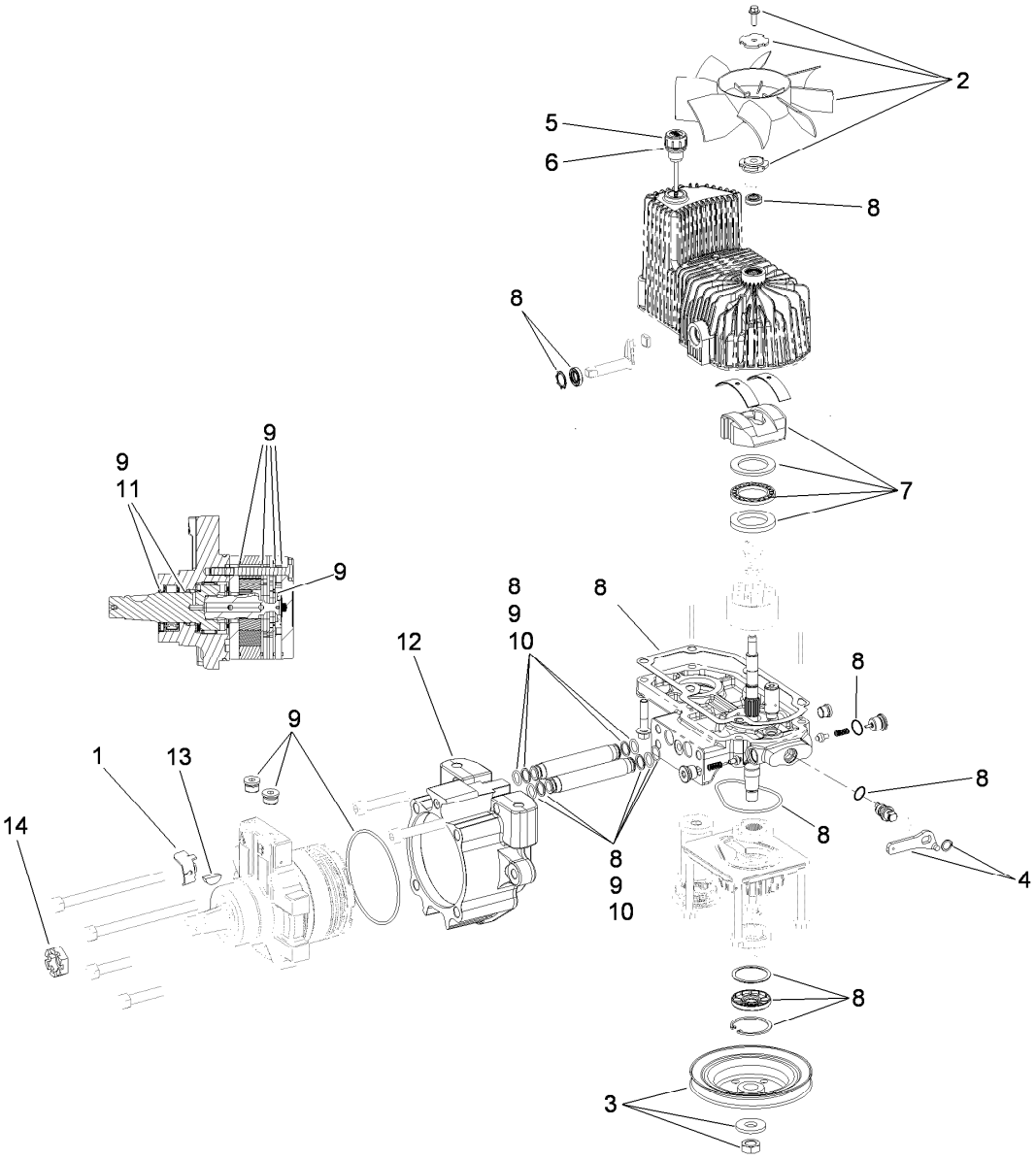

LH Hydro Assembly No. 116-1326

Ref.	Part Number	Qty.	Description
1	116-1758	1	Bracket-Anchor, Cable
2	116-0233	1	Fan Kit
3	116-0234	1	Pulley Kit
4	116-0235	1	Handle-Bypass Valve, Hydro
5	116-0236	1	Dipstick-Hydro W/Gasket
6	116-0237	1	Gasket-Dipstick, Hydro
7	116-1367	1	Swash Block Kit
8	116-1368	1	Pump Seal Kit
9	116-1369	1	Motor Seal Kit
10	116-1370	1	Tube Seal Kit
11	116-1371	1	Output Shaft Seal Kit
12	116-1372	1	Cup-Nose
13	3257-42	1	Key-Woodruff
14	1-809036	1	Nut-HH
99	116-1373	1	Flow Test Kit ●

● Not illustrated

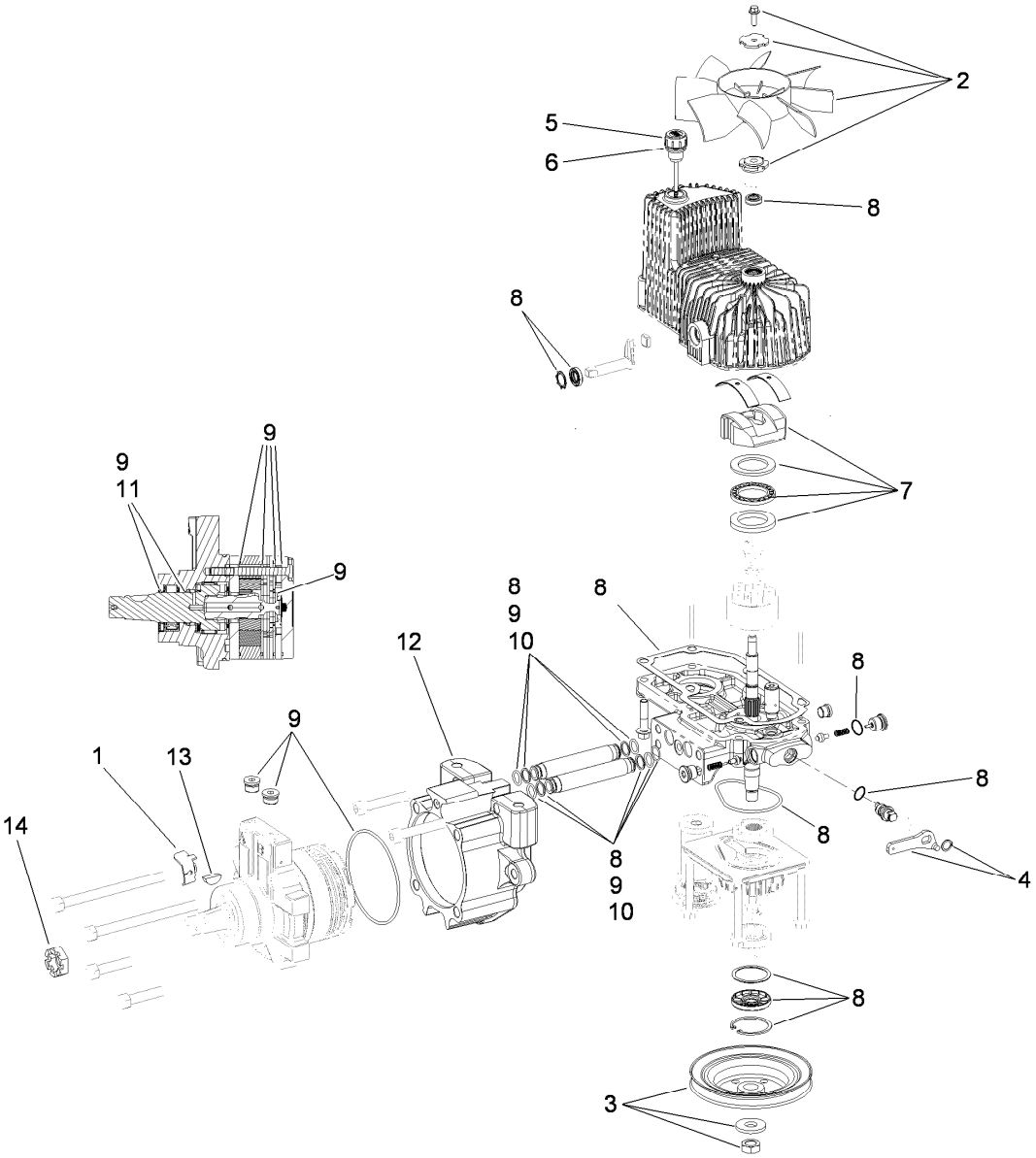

RH Hydro Assembly No. 116-1327

Ref.	Part Number	Qty.	Description
1	116-1758	1	Bracket-Anchor, Cable
2	116-0233	1	Fan Kit
3	116-0234	1	Pulley Kit
4	116-0235	1	Handle-Bypass Valve, Hydro
5	116-0236	1	Dipstick-Hydro W/Gasket
6	116-0237	1	Gasket-Dipstick, Hydro
7	116-1367	1	Swash Block Kit
8	116-1368	1	Pump Seal Kit
9	116-1369	1	Motor Seal Kit
10	116-1370	1	Tube Seal Kit
11	116-1371	1	Output Shaft Seal Kit
12	116-1372	1	Cup-Nose
13	3257-42	1	Key-Woodruff
14	1-809036	1	Nut-HH
99	116-1373	1	Flow Test Kit ●

● Not illustrated

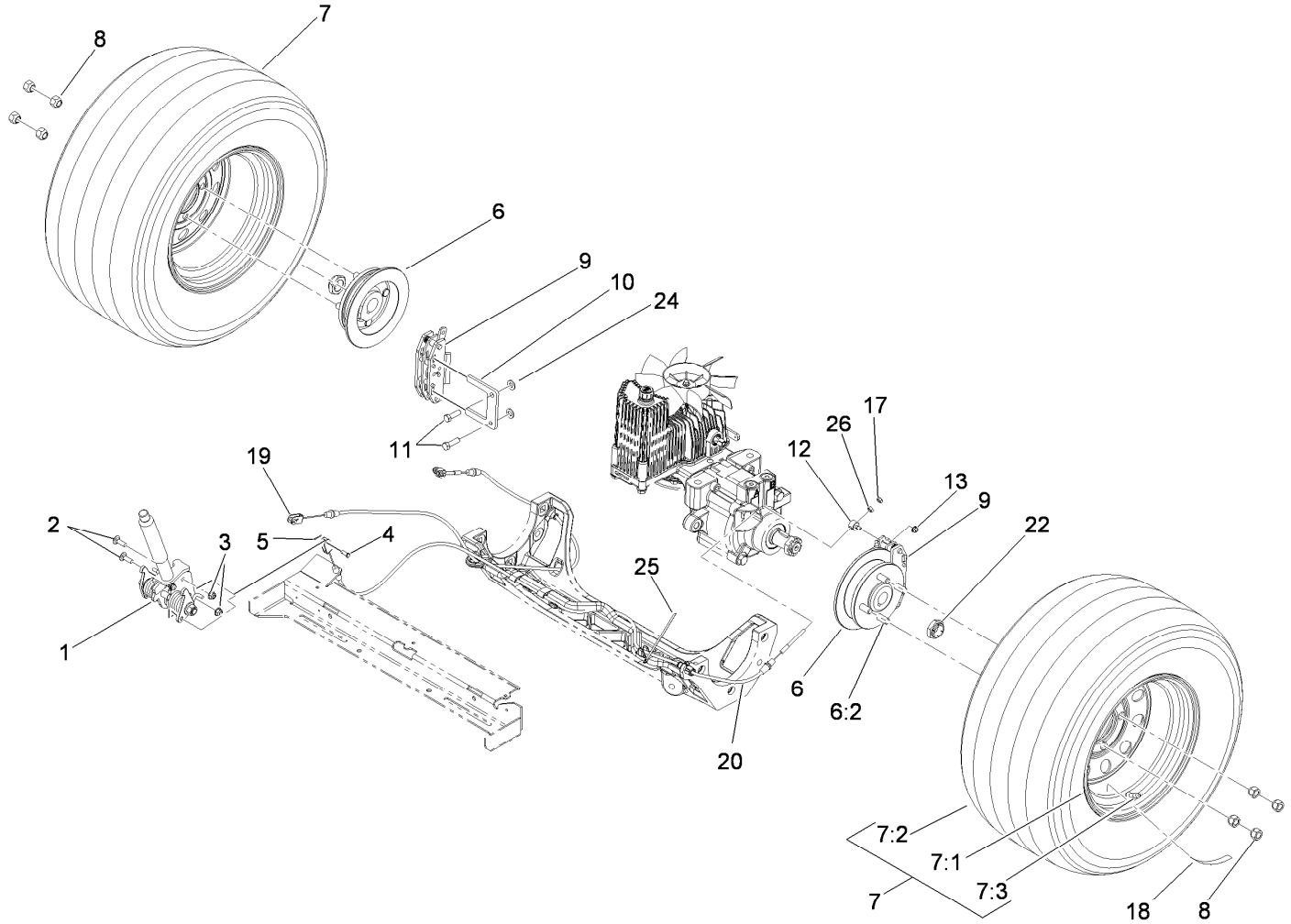

Rear Wheel and Park Brake Assembly

Ref.	Part Number	Qty.	Description
1	116-1878	1	Brake Handle ASM
2	3230-2	2	Bolt-CARR
3	104-8300	2	Nut-Flange, NI
4	60-1730	2	Pin-Clevis
5	3272-1	2	Pin-Cotter
6	116-1746	2	Wheel Hub ASM
6:2	116-1696	4	Stud-Wheel
7	109-3248	2	Wheel And Tire ASM
7:1	109-2871	1	Rim ASM
7:2	103-2744	1	Tire
7:3	232-27	1	Stem-Valve
8	242-50	8	Nut-Lug
9	109-2889	2	Caliper-Brake

Ref.	Part Number	Qty.	Description
10	109-0958	2	Plate-Mount, Brake
11	92-5727	4	Screw-Lock, Patch
12	112-8379	2	Swivel
13	104-7201	2	Nut-HF
17	3296-13	2	Nut-Lock, NI
18	117-3863	2	Decal-Wheel Hub, Ce
19	115-3584	1	Cable
20	115-3585	1	Cable
22	116-1399	2	Locknut
24	3256-24	4	Washer-Flat
25	116-0940	1	Tie-Cable
26	3219-1	2	Nut-Hex

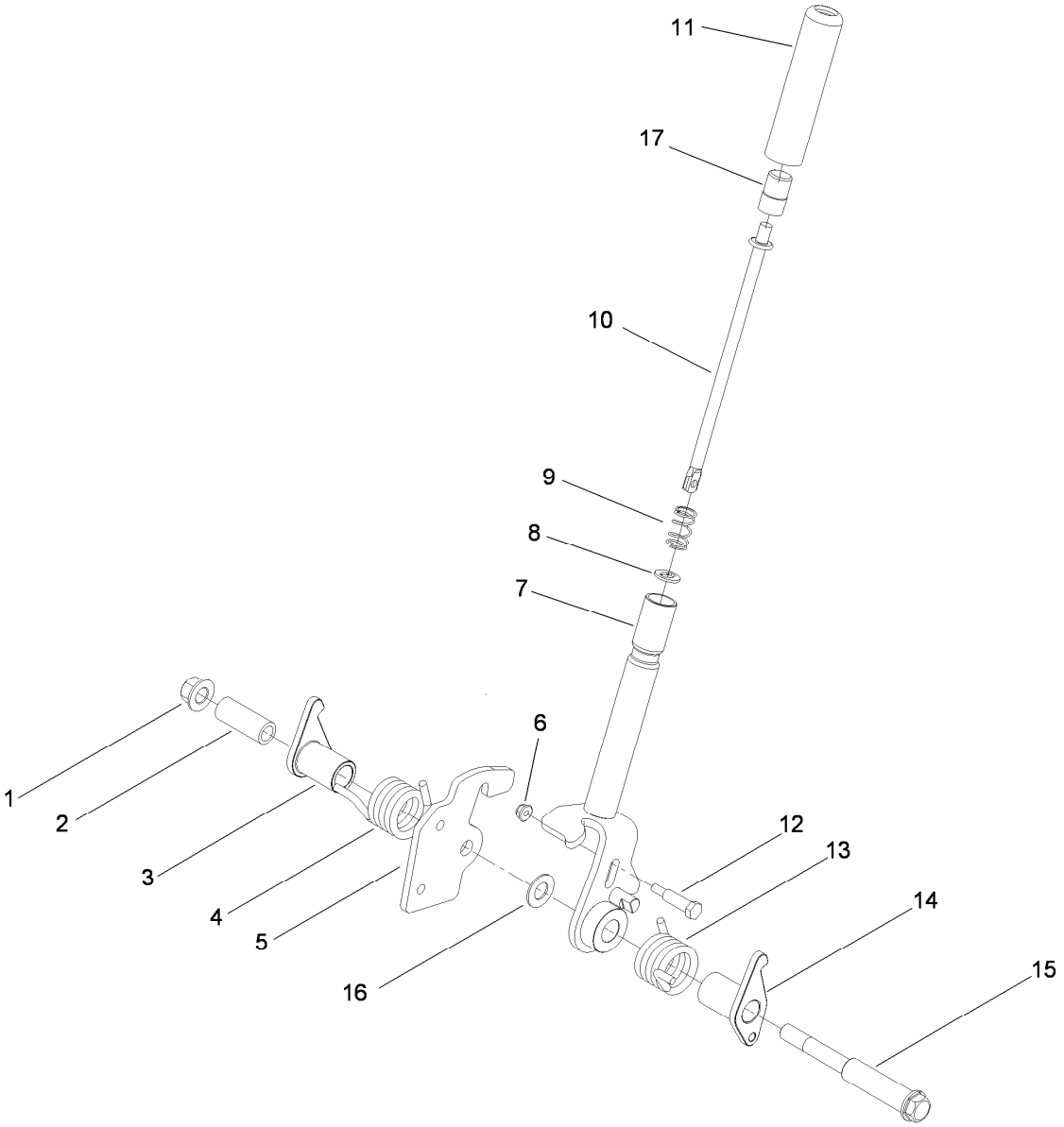

Brake Handle Assembly No. 116-1878

Ref.	Part Number	Qty.	Description
1	99-5107	1	Nut-Lock
2	117-0380	1	Spacer
3	115-3580	1	Arm-Brake, LH
4	117-0376	1	Spring-Torsion, RH
5	115-3574	1	Plate-Latch
6	104-7201	1	Nut-HF
7	116-1876-03	1	Brake Handle ASM
8	114-1207	1	Washer-Special
9	114-8187	1	Spring-Compression

Ref.	Part Number	Qty.	Description
10	115-3581	1	Rod-Release, Brake
11	115-3592	1	Grip
12	112-8387	1	Bolt-Shoulder
13	117-0375	1	Spring-Torsion, LH
14	115-3579	1	Arm-Brake, RH
15	117-0379	1	Bolt-Shoulder
16	3256-26	1	Washer-Flat
17	115-2750	1	Knob

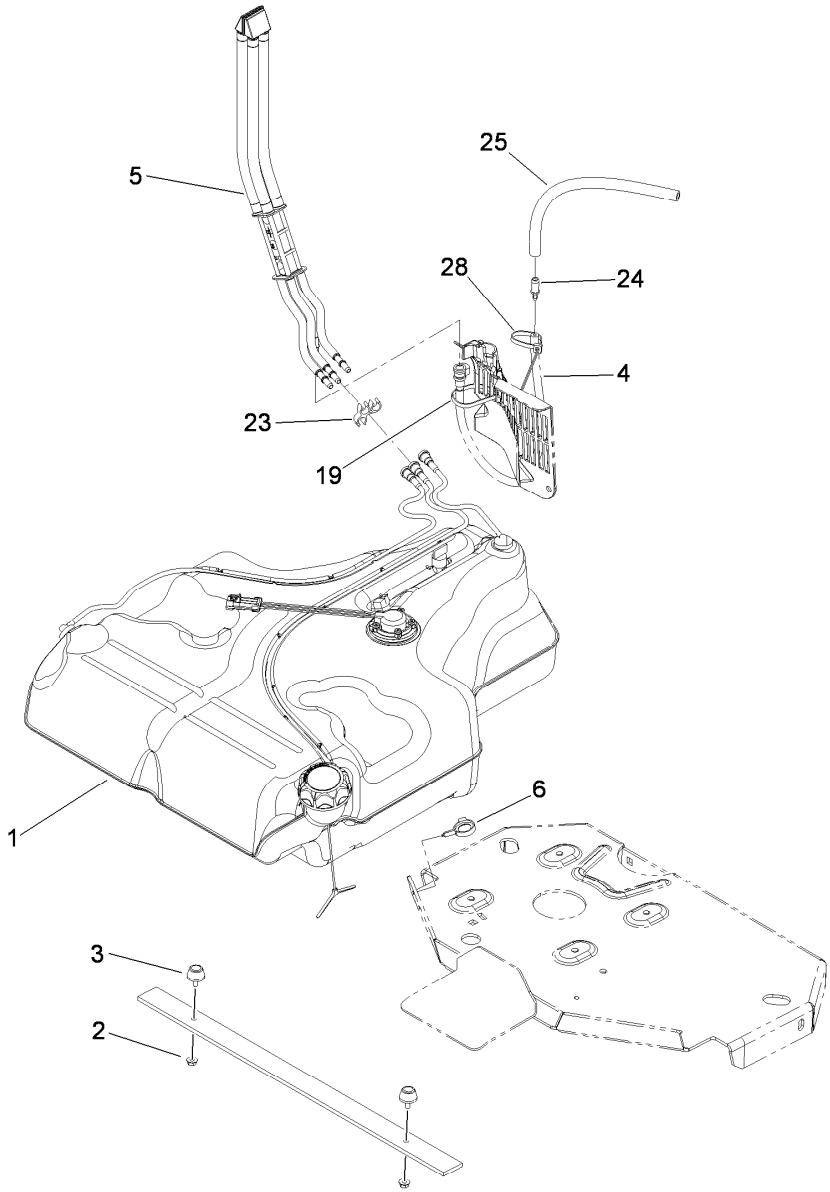

Fuel Tank Mounting Assembly

Ref.	*Part Number*	*Qty.*	*Description*
1	116-3979	1	Fuel Tank ASM
2	32128-33	2	Nut-HF
3	109-2365	2	Rubber Bumper ASM (W/Stud)
4	116-3977	1	Hose ASM
5	109-9491	1	Fuel Manifold Vent ASM
6	105-1853	1	Clamp-Hose
19	1-303335	1	Tie-Plastic
23	116-3370	1	Clip-Spacer
24	98-2952	1	Fitting-Straight
25	116-4344	1	Hose-Fuel
28	1-303335	1	Tie-Plastic

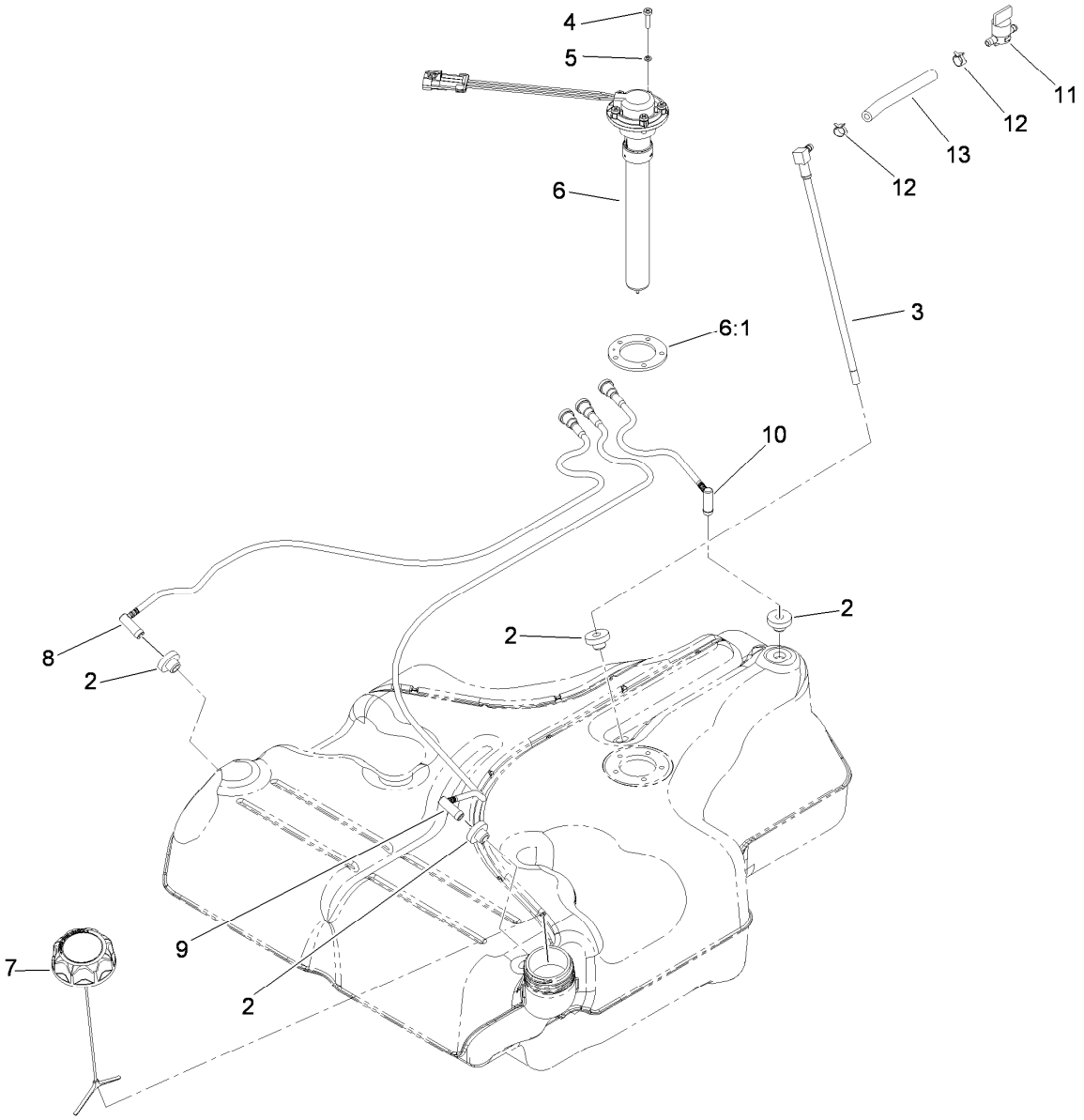

Fuel Tank Assembly No. 116-3979

Ref.	*Part Number*	*Qty.*	*Description*
2	46-6560	4	Bushing
3	109-9364	1	Fitting-Fuel (W/Line And Screen)
4	9107944	5	Screw-Pan 10-24 X 3/4
5	3253-17	5	Washer-Lock 3/16
6	116-0003	1	Sender-Fuel Level
6:1	109-9620	1	Gasket-Sender, Fuel
7	116-1704	1	Cap-Fuel, Ratcheting
8	109-9447	1	Tube-Vent, RH
9	109-9448	1	Tube-Vent, LH
10	109-9449	1	Tube-Vent, Rear
11	1-603770	1	Valve-Fuel
12	2412-98	2	Clamp-Hose
13	109-0650	1	Hose-Fuel

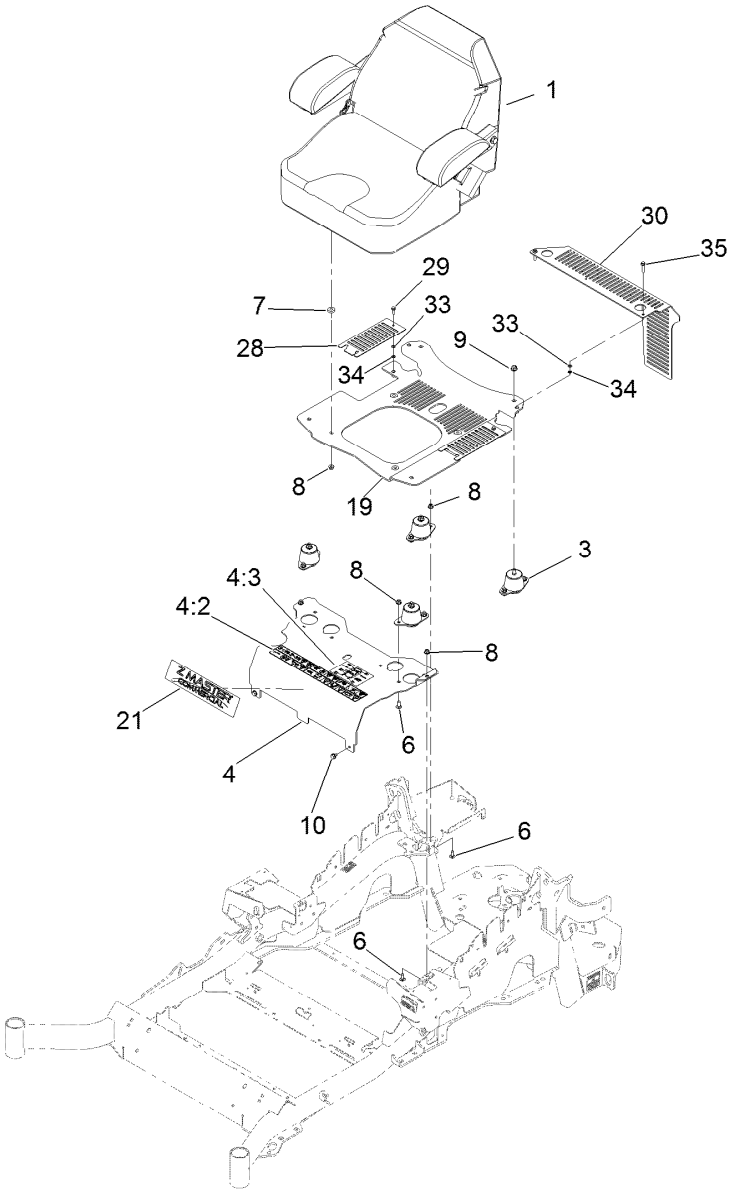

Seat Mounting Assembly

Ref.	Part Number	Qty.	Description
1	116-0035	1	Seat-Standard
3	109-9034	4	Isolator-Seat
4	116-2324	1	Mount-Seat
4:2	114-4468	1	Decal-Console
4:3	114-4465	1	Decal-Service Aid
6	3230-23	10	Screw-CARR
7	26-4840	4	Spacer-Pin, Mounting
8	104-8300	14	Nut-Flange, NI
9	104-8301	4	Nut-Flange, NI

Ref.	Part Number	Qty.	Description
10	9266934	2	Screw
19	117-0910	1	Seat Base ASM
21	114-5878	1	Decal-Dash
28	117-0901-03	2	Cover
29	32105-15	2	Screw
30	114-1548-03	1	Guard
33	3256-60	4	Washer-Flat
34	106-8737	4	Nut-Retainer
35	3234-21	2	Screw-HHF

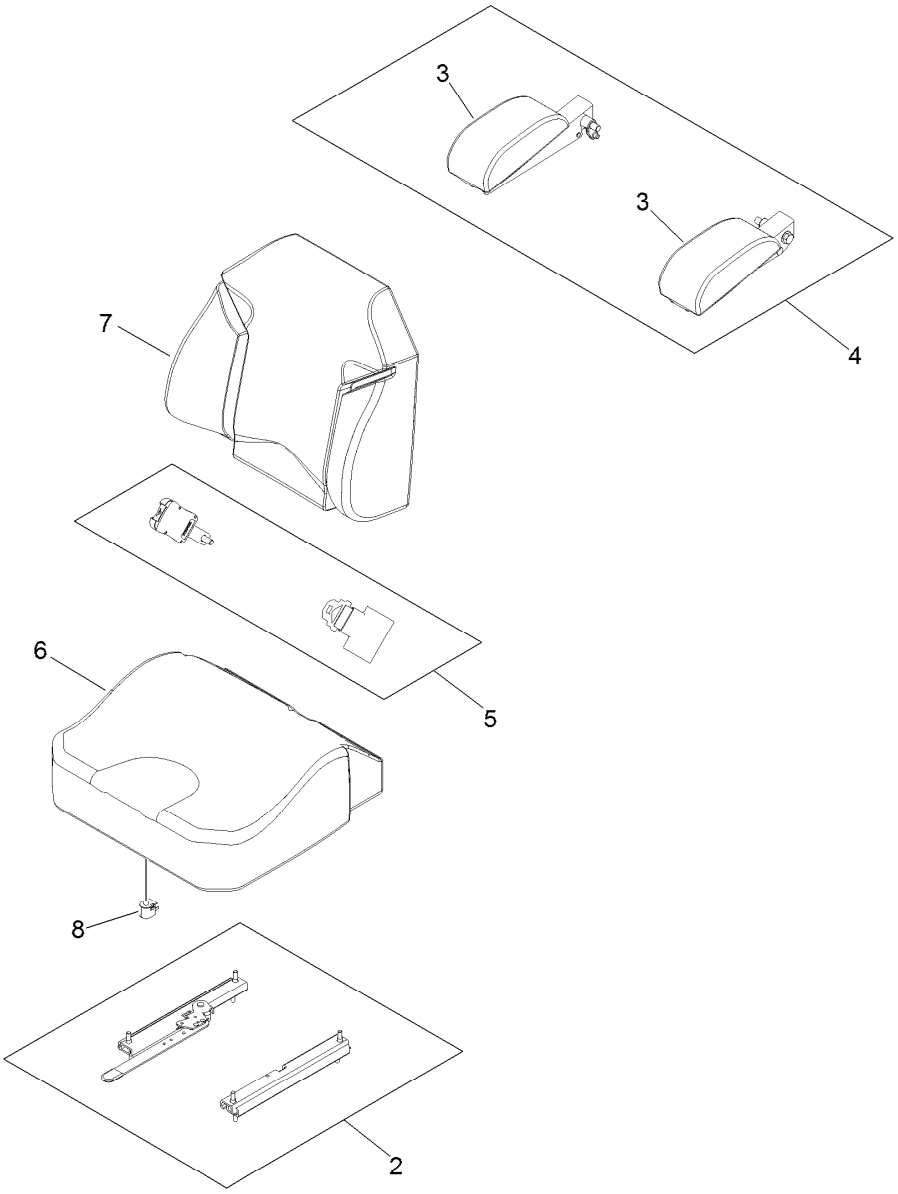

Seat Assembly No. 116-0035

Ref.	Part Number	Qty.	Description
2	109-9801	1	Seat Track Set
3	109-9802	1	Arm Rest Pad Set
4	109-9803	1	Arm Rest Set
5	109-9805	1	Seat Belt Kit
6	109-9806	1	Cover-Cushion
7	109-9808	1	Cover-Back
8	82-2190	1	Switch-Bail

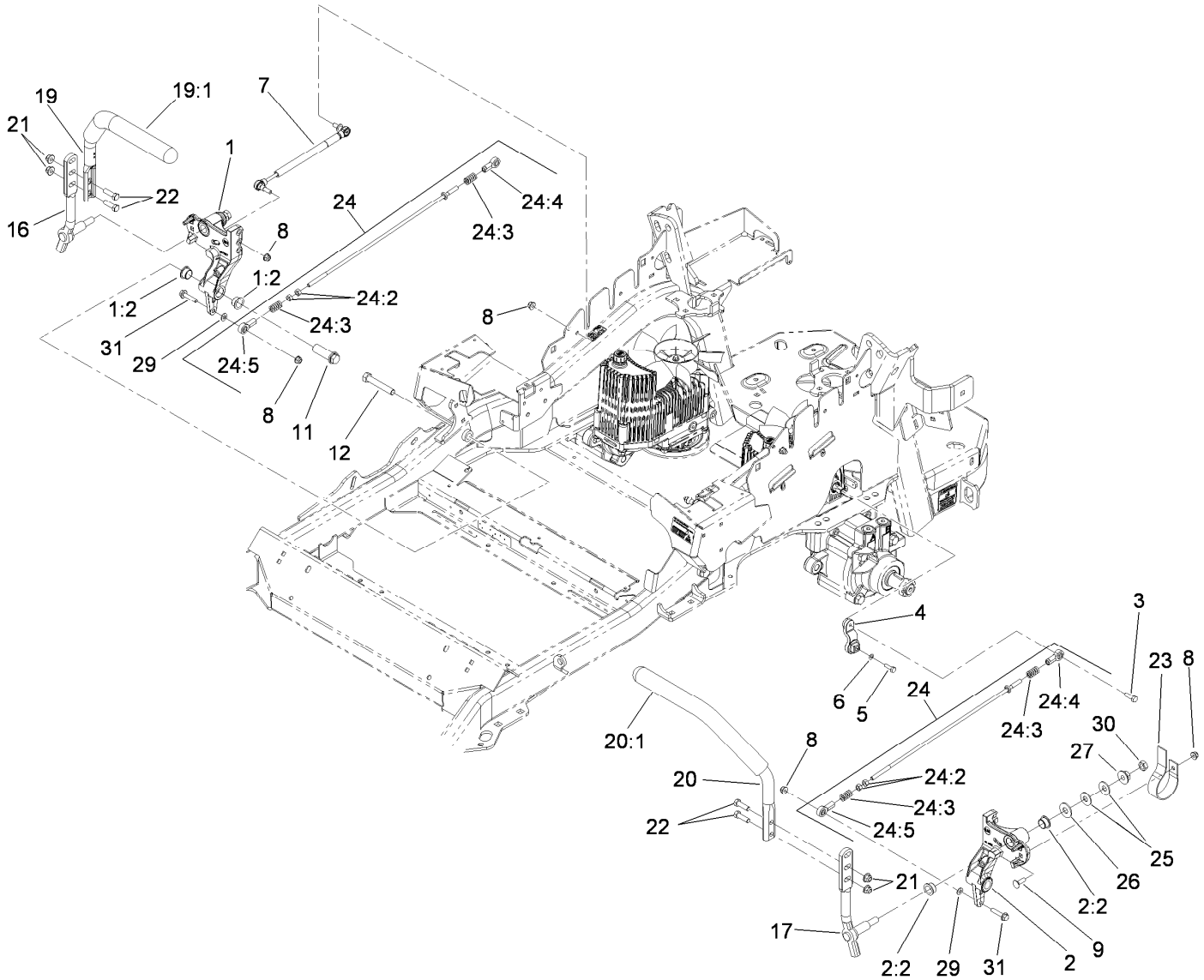

Motion Control Assembly

Ref.	Part Number	Qty.	Description
1	116-0880	1	RH Motion Control And Bushing ASM
1:2	109-8054	4	Bushing-Flange
2	116-0881	1	LH Motion Control And Bushing ASM
2:2	109-8054	4	Bushing-Flange
3	116-0648	2	Screw-Thread Locking
4	109-4581	2	Arm-Control, Pump
5	9080046	2	Screw-HH
6	1-303435	2	Washer-Spring
7	116-0027	2	Damper-Control, Motion
8	104-8300	8	Nut-Flange, NI
9	3230-2	2	Bolt-CARR
11	109-5891	2	Hub-Threaded
12	325-12	2	Screw-HH
16	116-0039	1	Lever-Control Motion, RH
17	116-0040	1	Lever-Control Motion, LH
19	109-6591	1	RH Steering Handle ASM

Ref.	Part Number	Qty.	Description
19:1	106-9987	1	Grip-Control, Motion
20	109-6592	1	LH Steering Handle ASM
20:1	106-9987	1	Grip-Control, Motion
21	104-8301	4	Nut-Flange, NI
22	323-7	4	Screw-HH
23	109-5575	2	Spring-Leaf
24	109-8106	2	Front Pump Linkage ASM
24:2	3219-2	2	Nut-Hex
24:3	1-323245	2	Spring-Compression
24:4	1-633152	1	Balljoint-LH
24:5	1-543017	1	Balljoint-RH
25	109-9505	4	Washer-Spring
26	3256-6	2	Washer-Flat
27	32128-56	2	Nut-HF
29	3256-23	2	Washer-Flat
30	3218-5	2	Nut-Jam
31	115-1794	2	Screw-HHF

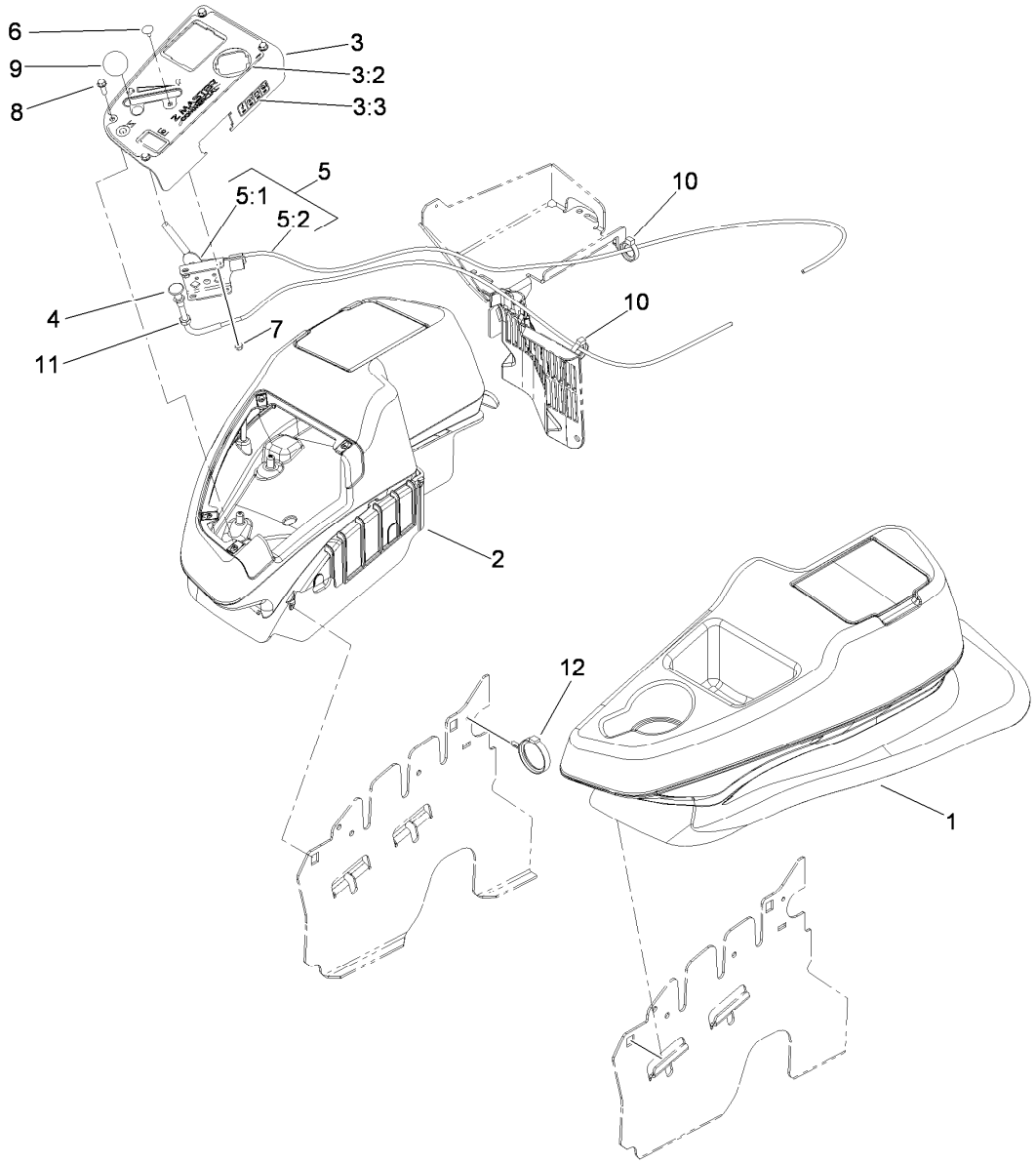

Fender, Console and Control Assembly

Ref.	Part Number	Qty.	Description
1	115-7401	1	LH Wide Fender/Console ASM
2	115-7400	1	RH Wide Fender/Console ASM
3	114-9836	1	Control Panel ASM
3:2	114-9834	1	Decal-Panel, Control
3:3	114-4466	1	Decal-Fuses
4	115-2753	1	Choke Control ASM
5	110-5727	1	Control-Throttle ASM

Ref.	Part Number	Qty.	Description
5:1	112-2334	1	Lever-Throttle
5:2	110-5728	1	Cable Throttle
6	1-807513	2	Bolt-CARR
7	3296-2	2	Nut-Lock, NI
8	32105-15	4	Screw
9	1-603175	1	Knob-Ball
10	105-1853	1	Clamp-Hose
11	3220-3	1	Nut-HJ
12	117-7817	1	Clamp-Harness

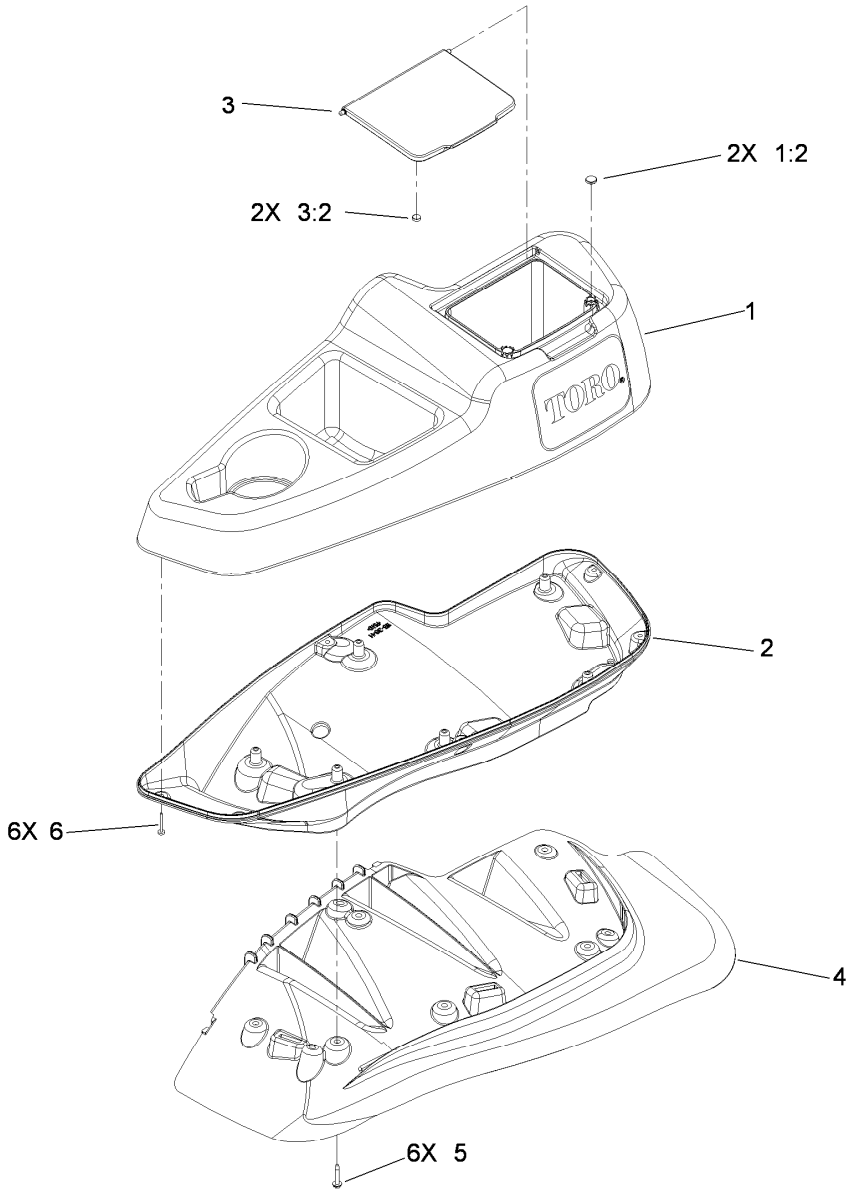

LH Console Assembly No. 115-7401

Ref.	*Part Number*	*Qty.*	*Description*
1	114-1539	1	LH Wide Console Top ASM
1:2	117-0883	2	Puck
2	115-3641	1	Console-Lower, LH Wide
3	114-1537	1	Wide Lid ASM
3:2	114-5896	2	Magnet
4	109-9085	1	Fender-Wide, LH
5	32144-89	6	Screw-Thread Forming
6	117-0347	6	Screw-Fillister Head

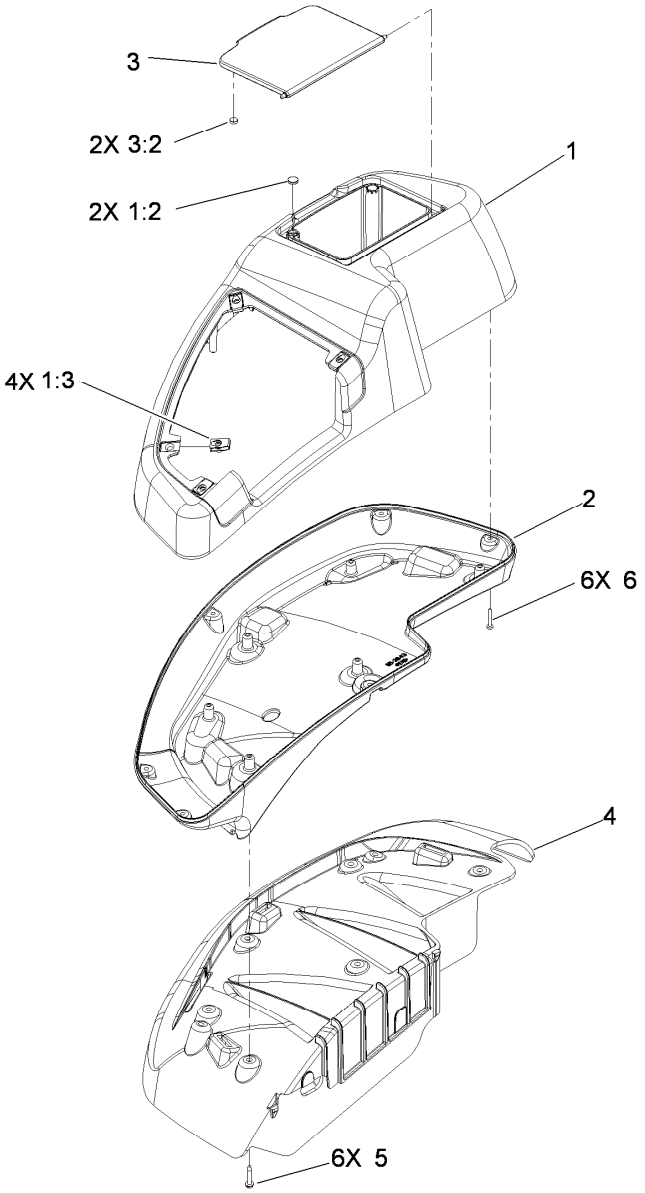

RH Console Assembly No. 115-7400

Ref.	*Part Number*	*Qty.*	*Description*
1	114-1538	1	RH Wide Top Console ASM
1:2	117-0883	2	Puck
1:3	107069	4	Clip
2	115-3643	1	Console-Lower, RH Wide
3	114-1537	1	Wide Lid ASM
3:2	114-5896	2	Magnet
4	109-9083	1	Fender-Wide, RH
5	32144-89	6	Screw-Thread Forming
6	117-0347	6	Screw-Fillister Head

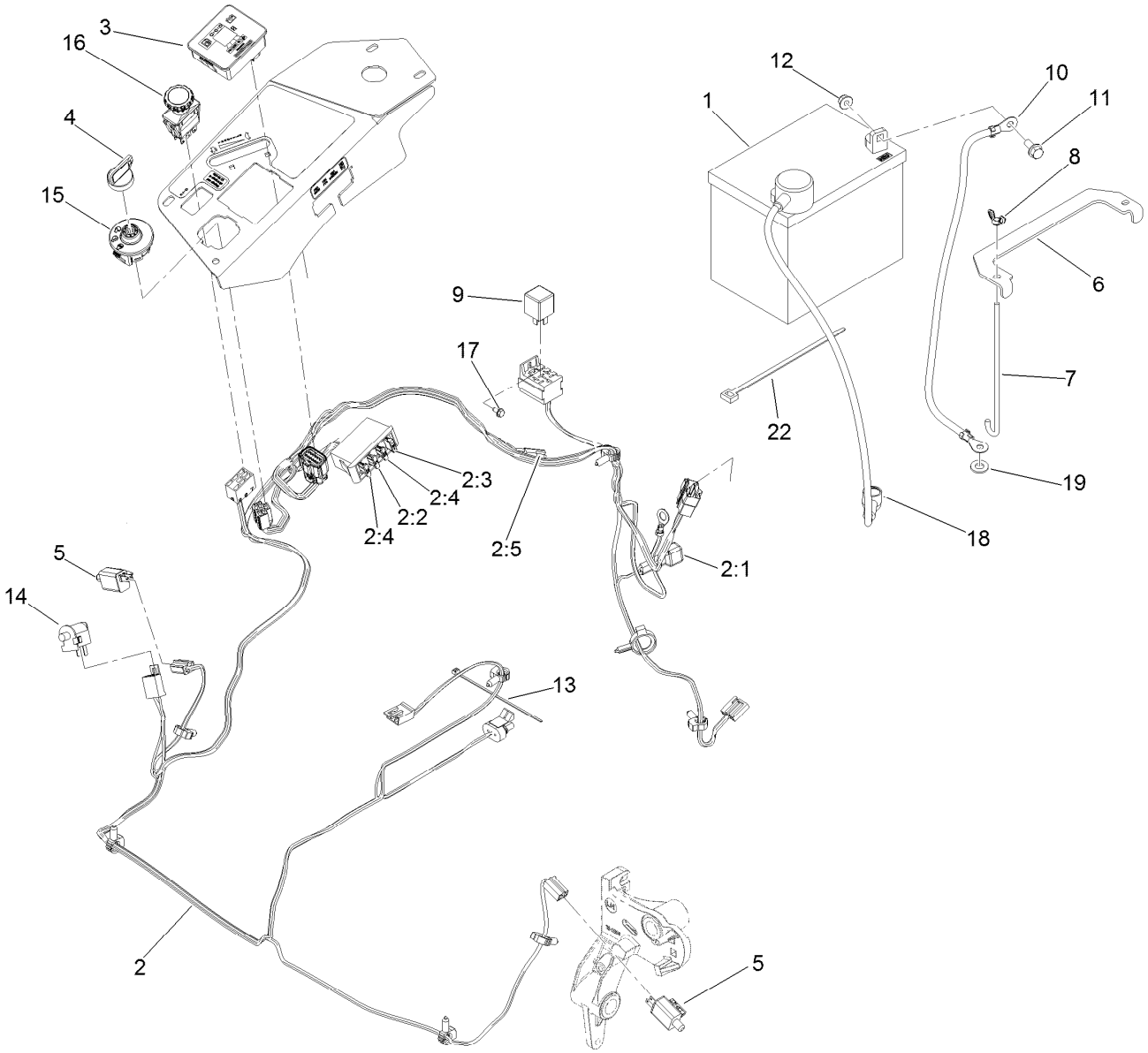

Electrical System Assembly

Ref.	Part Number	Qty.	Description
1	104-2491	1	Battery
2	115-2796	1	Harness-Wire, Main
2:1	103-3895	1	Diode-Tvs
2:2	218-578	1	Fuse-Blade, 10 Amp
2:3	109355	1	Fuse-Blade, 15 Amp
2:4	109102	2	Fuse-Blade, 25 Amp
2:5	116-0053	1	Cap-Plug
3	117-3882	1	Fuel/Hour Meter ASM
4	63-8360	1	Key-Ignition
5	110-6765	2	Switch-Single Pole No
6	116-0042-03	1	Strap-Tie Down, Battery
7	1-633651	2	Bolt-Holddown
8	1-543792	2	Wingnut

Ref.	Part Number	Qty.	Description
9	1-643275	1	Relay
10	114-1218	1	Cable-Battery, Negative
11	3234-5	2	Screw-HHF
12	104-8300	2	Nut-Flange, NI
13	1-303287	3	Tie-Cable
14	82-2190	1	Switch-Bail
15	117-2221	1	Switch-Ignition
16	116-0124	1	Switch-PTO, 10A
17	104-2065	1	Screw-HWH
18	115-3864	1	Cable-Battery, Positive
19	3256-24	1	Washer-Flat
22	1-303335	1	Tie-Plastic

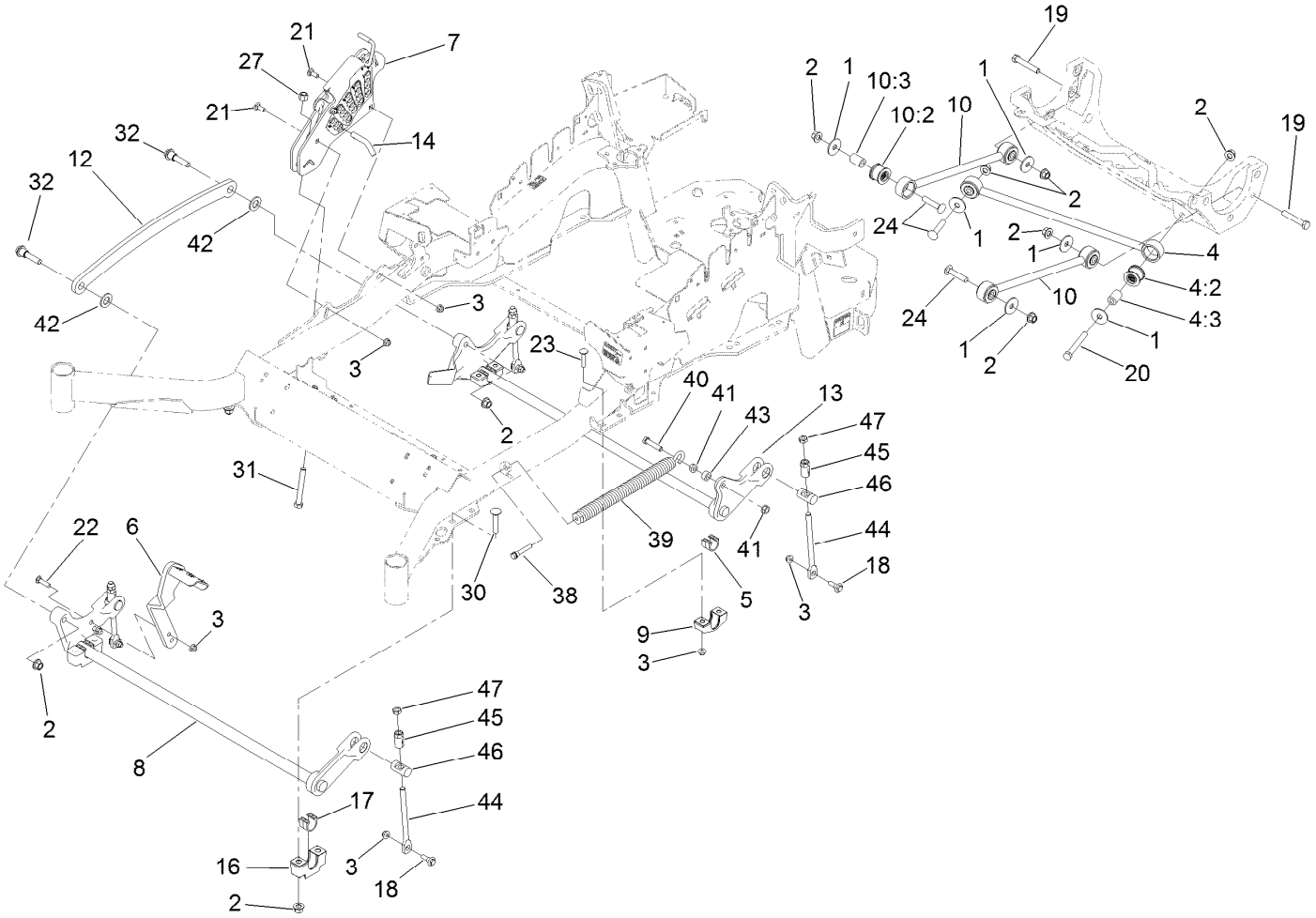

Deck Lift Assembly

Ref.	Part Number	Qty.	Description
1	86-1990	6	Washer
2	99-5107	12	Nut-Lock
3	104-8301	12	Nut-Flange, NI
4	109-5013	1	Panhard Rod ASM
4:2	109-5009	2	Bushing-Suspension, Rubber
4:3	109-5010	2	Spacer
5	109-7173	2	Bearing-Cross, Rear Shaft
6	116-1919-01	1	Lever-Foot
7	117-3842	1	Height-Of-Cut ASM
8	116-1771-03	1	Deck Lift-Front
9	116-0818-03	2	Support-Bearing, Cross Shaft Rear
10	109-7952	2	Deck Strut ASM
10:2	109-5009	2	Bushing-Suspension, Rubber
10:3	109-5010	2	Spacer
12	116-0797-03	1	Link-Lift, Deck
13	116-2645-03	1	Lift-Deck, Rear
14	109-8757	1	Pin-HOC

Ref.	Part Number	Qty.	Description
16	109-9409	2	Support-Cross Shaft, Bearing Front
17	109-9410	2	Bearing-Shaft Front, Cross
18	109-9840	4	Screw-Shoulder, HHF
19	325-12	2	Screw-HH
20	325-17	1	Screw-HH
21	3231-2	2	Screw-CARR
22	3231-4	2	Screw-CARR
23	3231-5	4	Screw-CARR
24	3233-34	3	Screw-CARR
27	3296-23	1	Nut-Lock, NI
30	116-1700	4	Bolt-CARR
31	116-0559	1	Bolt-TAP
32	116-2022	2	Screw-HHF, Shoulder
38	92-7674	1	Bolt-Shoulder
39	116-0000	1	Extension Spring ASM
40	109-9065	1	Screw-HH
41	32128-37	2	Nut-HF
42	3256-28	2	Washer-Flat
43	116-2695	1	Spacer
44	109-8007	4	Link-Adjuster, Deck Lift

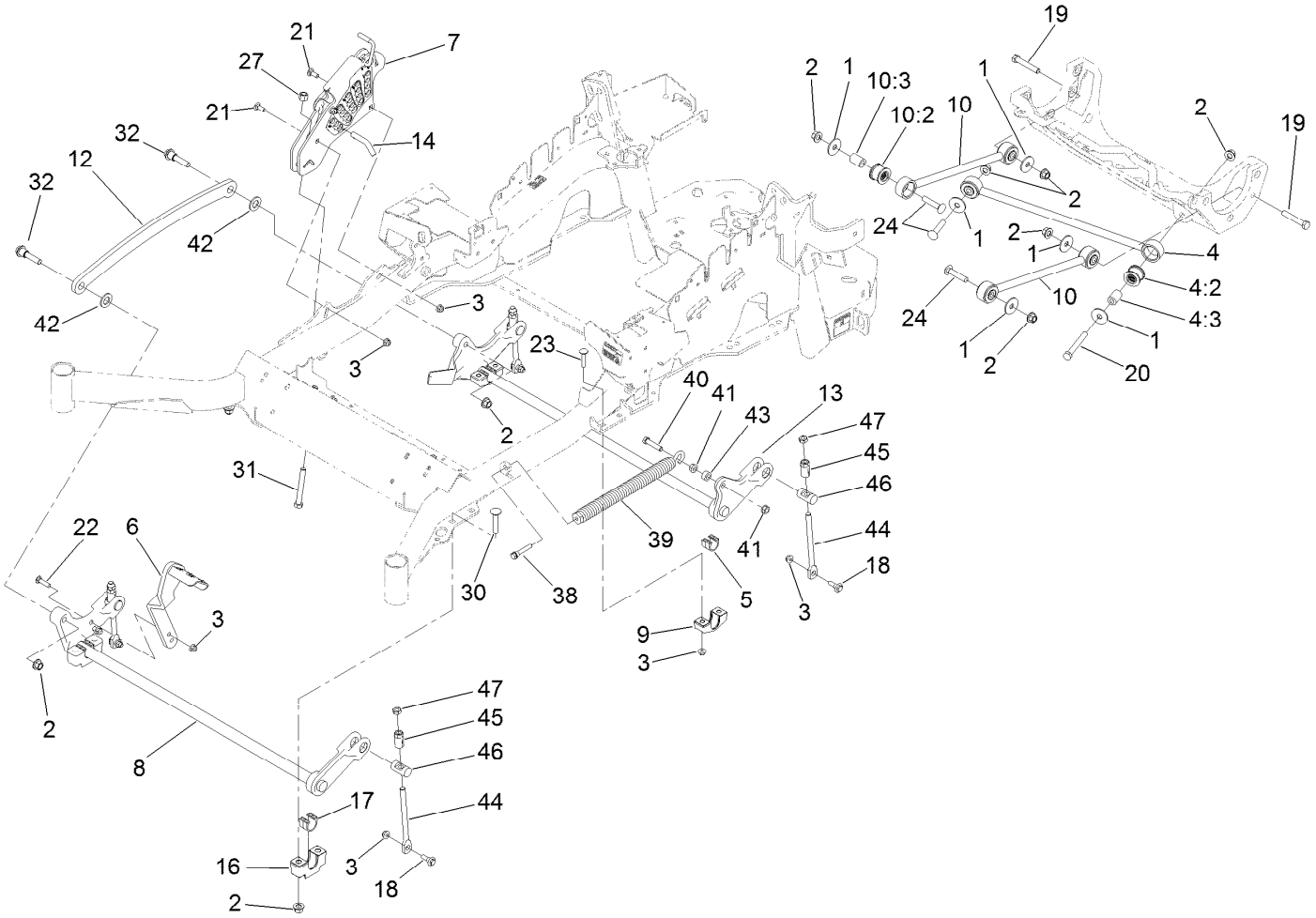

Deck Lift Assembly (continued)

Ref.	Part Number	Qty.	Description
45	109-7840	4	Adjuster-Lift, Deck
46	109-8353	4	Trunnion
47	3218-5	4	Nut-Jam

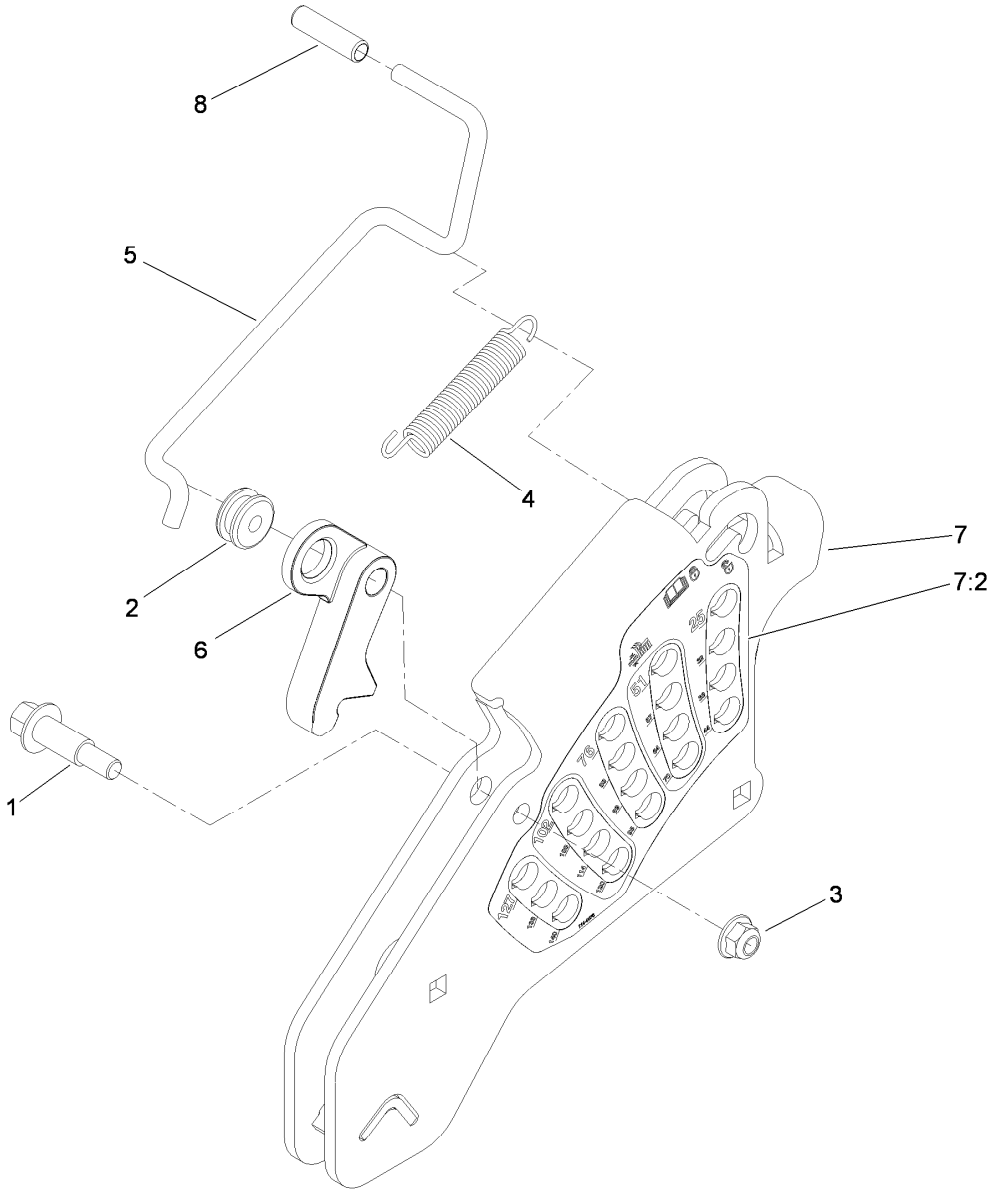

Height-of-Cut Assembly No. 117-3842

Ref.	*Part Number*	*Qty.*	*Description*
1	62-1330	1	Bolt-Shoulder
2	109-7130	1	Grommet
3	104-8301	1	Nut-Flange, NI
4	109-7124	1	Spring-Extension
5	109-7128	1	Rod-Lock, Transport
6	116-0118	1	Pawl-Transport, HOC
7	117-3837	1	Plate-Height Adjuster
7:2	114-4470	1	Decal-HOC
8	109-8250	1	Grip-Lever

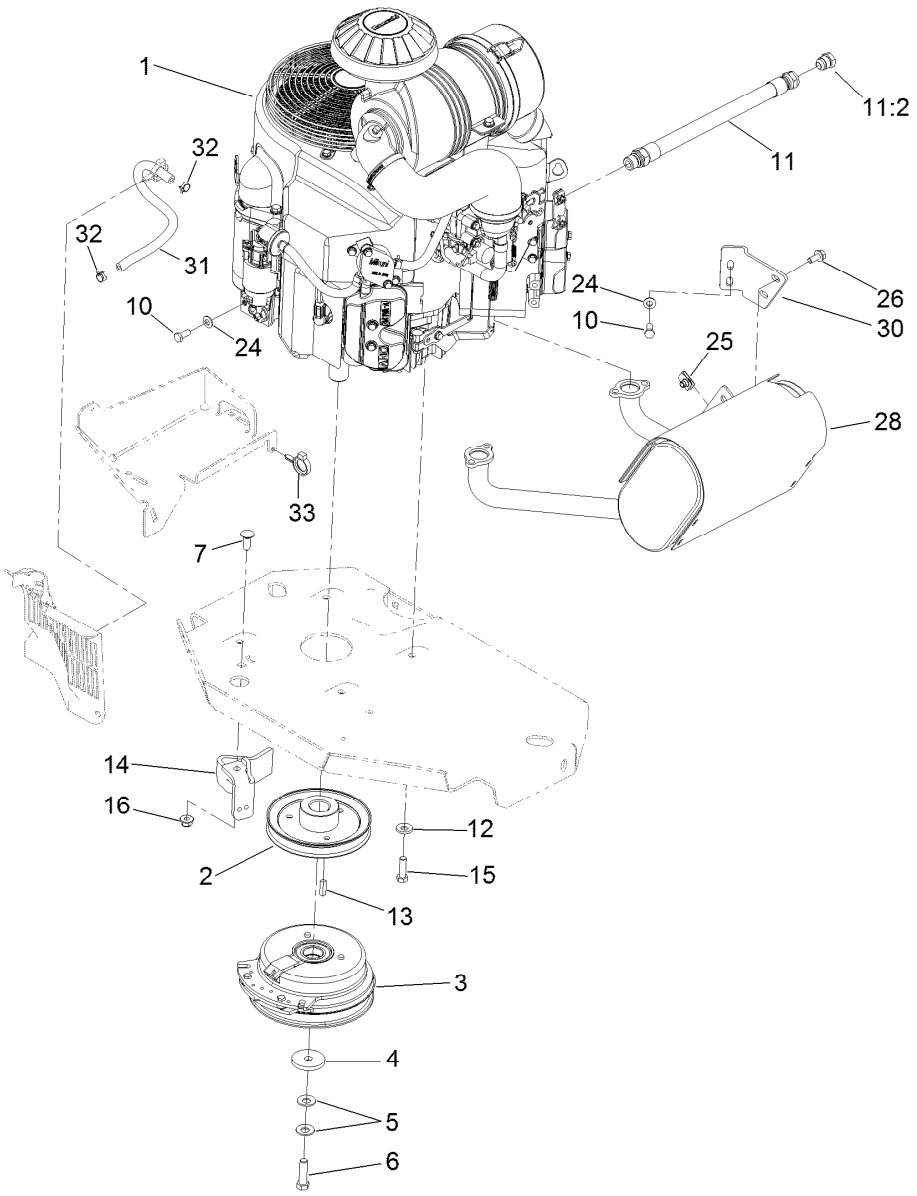

Engine, Muffler and Clutch Assembly

Ref.	Part Number	Qty.	Description
1		1	Engine-Kawasaki, Fx801V-S04-R ●■
2	109-9905	1	Sheave
3	116-1620	1	Clutch Kit
4	109-6919	1	Washer-Clutch
5	1-603610	2	Washer-Spring
6	109-9761	1	Screw-HH,W/Loctite
7	3231-22	1	Screw-CARR
10	33114-020	3	Screw-HH
11	109-4490	1	Oil Drain Hose ASM
11:2	109-1012	1	Plug
12	98-5975	4	Washer-Belleville

Ref.	Part Number	Qty.	Description
13	1-807259	1	Key
14	116-2612-01	1	Clutch-Anchor
15	323-7	4	Screw-HH
16	104-8301	1	Nut-Flange, NI
24	1-303334	3	Washer-Spring
25	94-2413	2	U-Nut
26	3234-5	2	Screw-HHF
28	116-1712	1	Muffler
30	116-0203	1	Bracket-Muffler
31	109-0296	1	Hose-Fuel
32	2412-98	2	Clamp
33	105-1853	1	Clamp-Hose

● Not serviced separately

■ Obtain parts from www.kawpowerepc.com

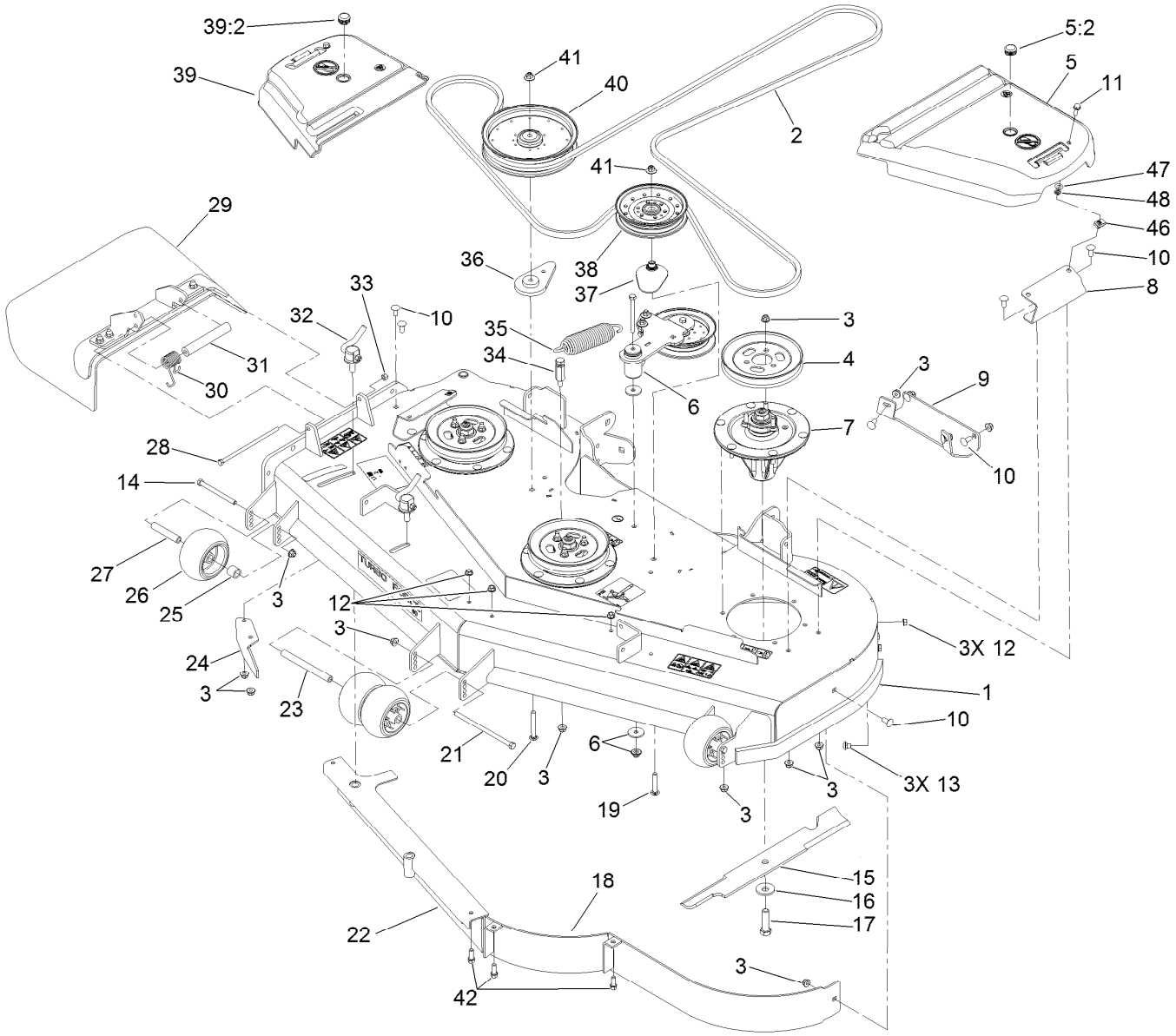

Deck Assembly

Ref.	Part Number	Qty.	Description
1	117-3800	1	Deck Decal ASM
2	114-5858	1	Belt-V
3	104-8301	42	Nut-Flange, NI
4	105-7734	3	Pulley
5	117-7816	1	LH Belt Cover ASM
5:2	117-3824	1	Plug-Plastic
6		1	Idler Arm ASM ●
7	119-8560	3	Spindle ASM
8	114-5882-01	2	Bracket-Cover, Belt
9	105-8792-01	1	Plate-Skid
10	3231-27	11	Screw-CARR
11	3234-29	2	Screw-HHF
12	3290-357	6	Nut-HHF, Whiz
13	108-5387	3	Screw-CARR
14	323-23	2	Screw-HH
15	105-7718-03	3	Blade-Hi Flow
16	103-0865	3	Washer-Blade Bolt, Heavy
17	51-4060	3	Screw-Blade
18	114-5842-01	1	Baffle ASM

Ref.	Part Number	Qty.	Description
19	3231-40	1	Bolt-CARR
20	3231-42	1	Screw-CARR
21	108-5388	1	Screw-HH
22	105-7669-01	1	Baffle ASM
23	98-5967	1	Spacer-Wheel
24	106-3216-01	1	Baffle-Discharge
25	98-7913	2	Tube-Spacer
26	1-603299	4	Roller-Scalp, Anti
27	98-7912	2	Tube-Spanner
28	322-50	1	Screw-HH
29	108-2792	1	Rubber Deflector ASM
30	108-4052	1	Spring-Torsion
31	105-4622	1	Spacer
32	107-1664	2	Lever ASM
33	3296-29	1	Nut-Lock, NI
34	114-5867	1	Anchor-Spring, Tall
35	116-0133	1	Extension-Spring
36	109-9416	1	Spacer-Idler
37	109-2872	1	Spacer-Pulley

● Not serviced separately

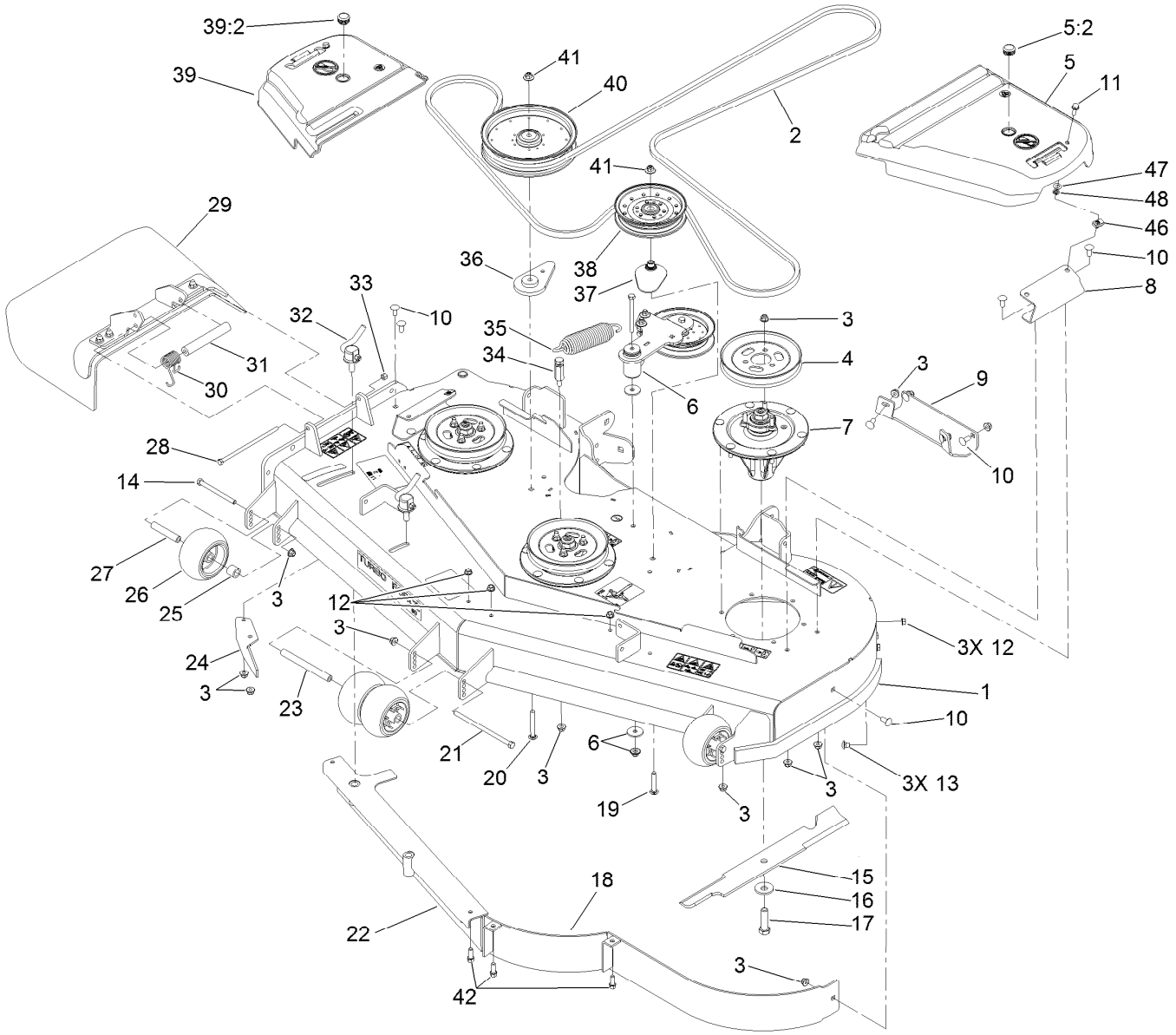

Deck Assembly (continued)

Ref.	Part Number	Qty.	Description
38	114-5895	1	Pulley-Idler, Flat
39	117-7815	1	RH Belt Cover ASM
39:2	117-3824	1	Plug-Plastic
40	109-8590	1	Pulley-Idler
41	109-6658	2	Nut-Flange, NI

Ref.	Part Number	Qty.	Description
42	92-1624	3	Screw-HWH
46	94-2413	2	U-Nut
47	73-0041	2	Washer-Thrust
48	117-2749	2	Nut-Push

● Not serviced separately

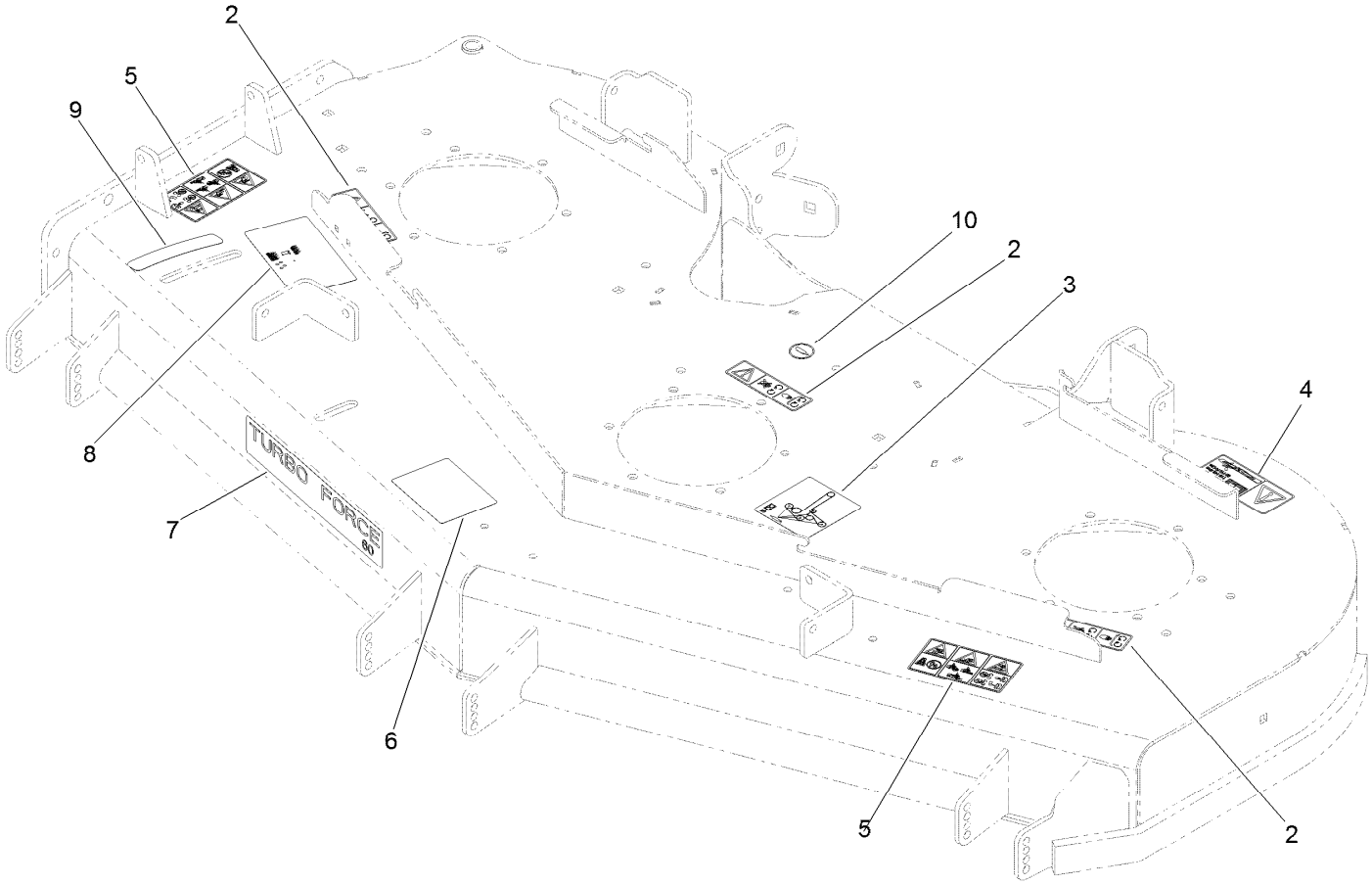

Deck Decal Assembly No. 117-3800

Ref.	*Part Number*	*Qty.*	*Description*
2	112-9028	3	Decal-Cover Missing
3	115-7445	1	Decal-Routing, Deck Belt
4	93-7818	1	Decal-Torque, Blade Bolt
5	117-3848	2	Decal-Danger
6	99-8939	1	Decal-Anti Scalp
7	107-1619	1	Decal
8	110-2068	1	Decal-Adjustment, Baffle
9	110-2067	1	Decal-Setting, Baffle
10	58-6520	1	Decal-Grease

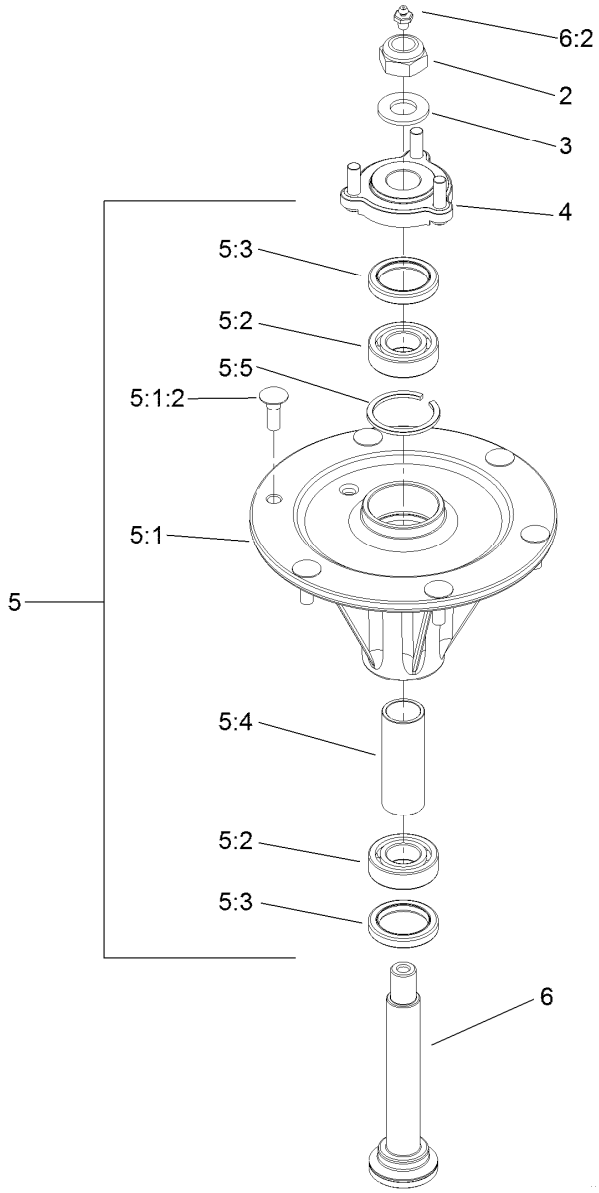

Spindle Assembly No. 119-8560

Ref.	Part Number	Qty.	Description
2	3296-67	1	Nut-Lock, NI
3	92-5836	1	Washer
4	117-6172	1	Spindle Hub ASM
5		1	Spindle Housing ASM ●
5:1		1	Spindle Housing And Studs ASM ●
5:1:2	114-8195	6	Bolt-Ribbed Neck
5:2	119-8554	2	Bearing -Noseal
5:3	253-133	2	Seal-Oil
5:4	117-6184	1	Spacer
5:5	114-8161	1	Ring-Snap
6	119-8527	1	Spindle Shaft And Zerk ASM
6:2	302-2	1	Fitting-Grease

● Not serviced separately

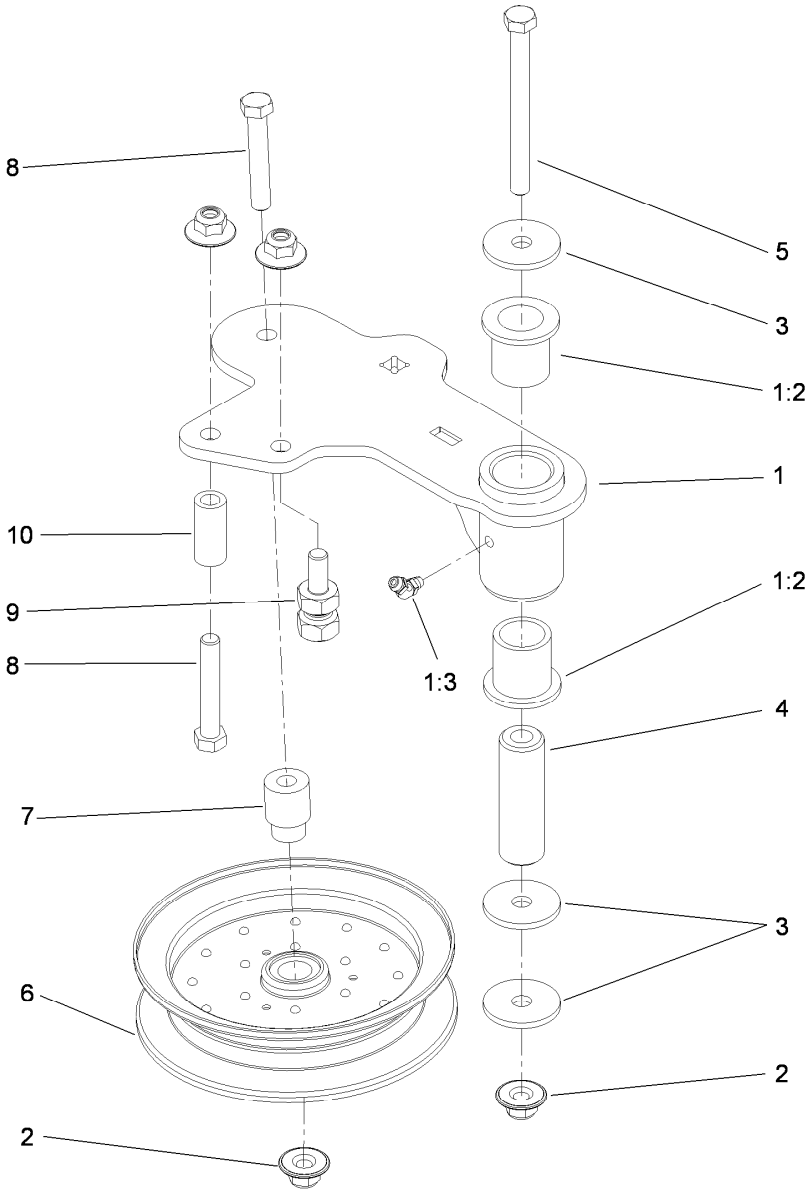

Idler Assembly

Ref.	Part Number	Qty.	Description
1	114-5870	1	Idler Arm ASM
1:2	1-303514	2	Bearing-Flanged
1:3	1481	1	Fitting-Grease
2	109-6658	4	Nut-Flange, NI
3	1-213069	3	Washer
4	114-5848	1	Spacer-Plain
5	98-5961	1	Screw-HH
6	103-8743	1	Pulley-Idler, Flanged
7	112-4212	1	Mount-Pulley
8	323-11	2	Screw-HH
9	114-5866	1	Anchor-Spring, Short
10	104-0151	1	Spacer

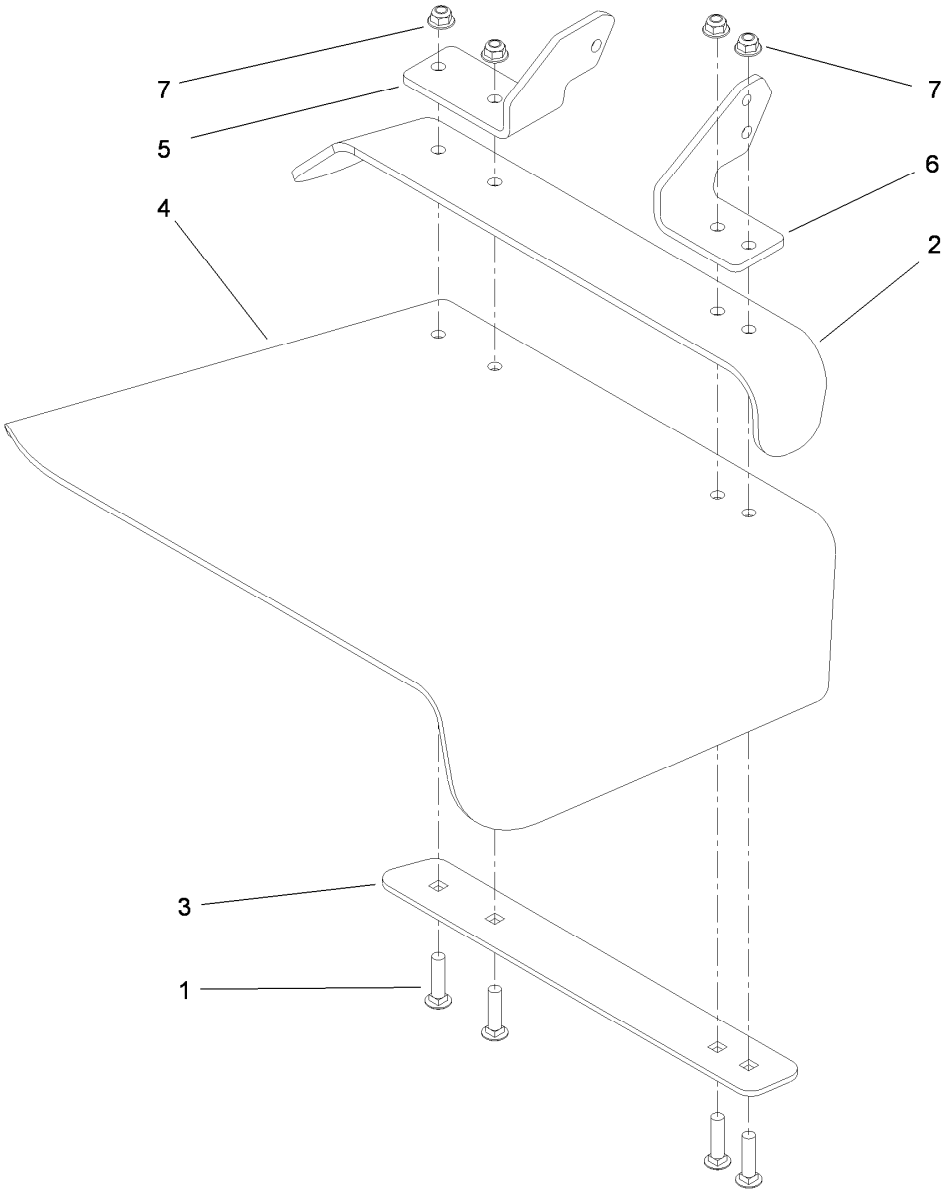

Rubber Deflector Assembly No. 108-2792

Ref.	*Part Number*	*Qty.*	*Description*
1	3231-4	4	Screw-CARR
2	106-3246-01	1	Deflector
3	106-3248-03	1	Strap-Discharge
4	108-5029	1	Deflector-Rubber
5	108-4059-01	1	Plate-Hinge, Rear
6	106-3253-01	1	Plate-Hinge, Front
7	104-8301	4	Nut-Flange, NI

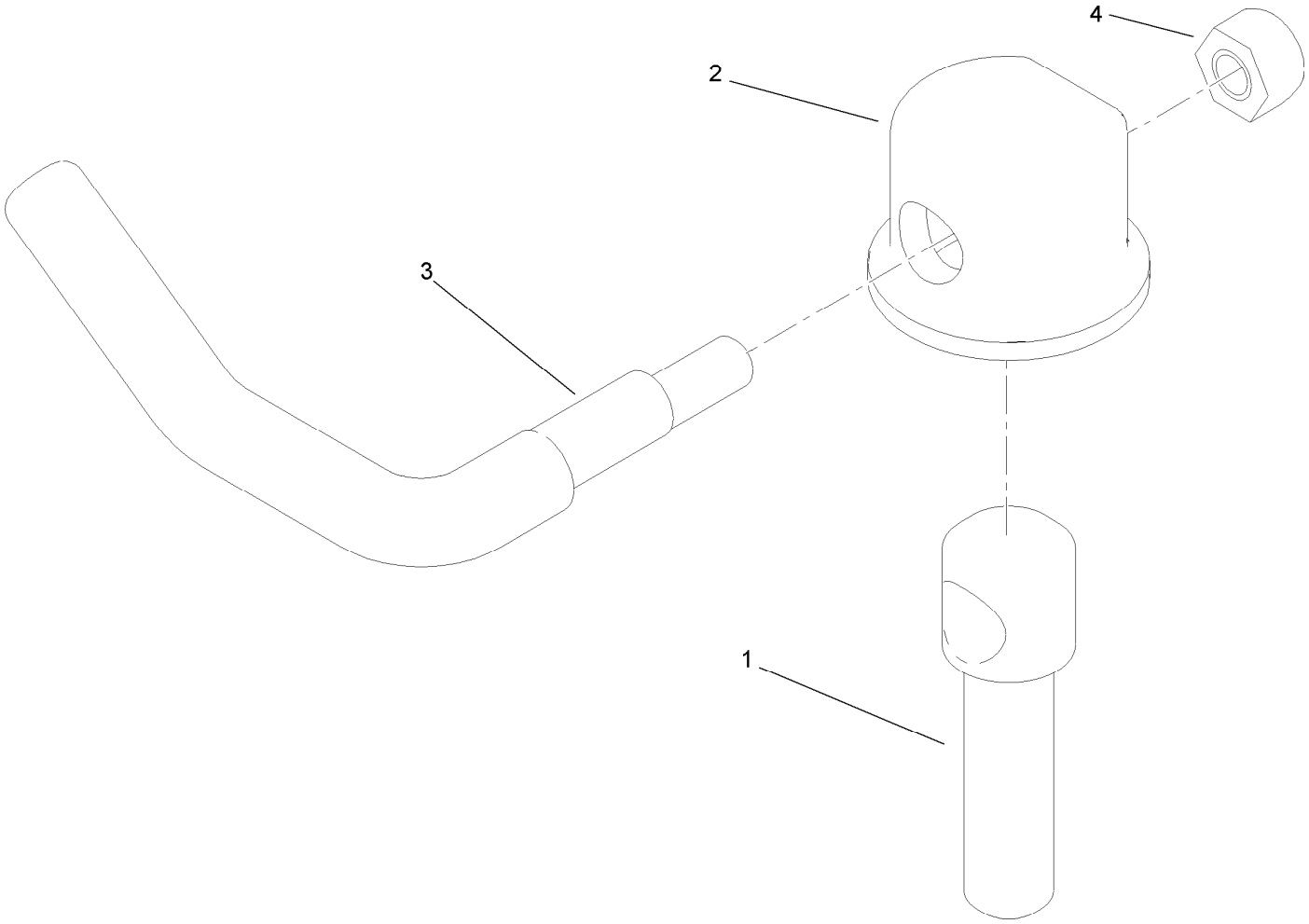

Lever Assembly No. 107-1664

Ref.	*Part Number*	*Qty.*	*Description*
1	106-3239	1	Screw-Lock
2	107-1644	1	Cap-Lock
3	106-3241	1	Lever-Lock
4	3296-29	1	Nut-Lock, NI

Attachments and Accessories

For 74925TE Z Master G3 Riding Mower with 152cm TURBO FORCE Side Discharge Mower

Product Name	Model/Part
Blade-Mid Flow, 20.5 inch	105-7715-03
Blade-Lo Flow, 20.5 inch	105-7716-03
Blade-Hi Flow, 20.5 inch	105-7718-03
Blade-Recycler, 20.5 inch	105-7777-03
Blade-Atomic, 20.5 inch	105-8777-03
6 Pack Blade, 20.5 inch Hi-Flow	108-1114
6 Pack-Blade, 20.5 inch Atomic	108-1115
6 Pack Blade, 20.5 inch Mid-Flow	108-1123
6 Pack-Blade, 20.5 inch Lo Flow	108-1128
Hitch Kit	109-9487
6 Pack-Blade, 20.5 inch Recycler	110-0405
Hypr-Oil 500 (quart)	114-4713
Hypr-Oil 500 (gallon)	114-4714
Hypr-Oil 500-5 (5 gallon)	114-4715
Bimini Folding Shade Assembly	115-4510
Recycler Kit	115-7468
Roller Striper Kit	115-7470
Light Kit	116-1154
Z Stand Kit	117-0350
Operator-Controlled Discharge Chute Kit	117-3600
CE Bagger Compliance Kit	117-3826
Deluxe Suspension Seat Kit	117-6174
Toro Deluxe Rider Cover	490-7319
Spark Arrestor Screen	75-6880
Blower and Drive Kit	78553
E-Z Vac Triple Bagging System	78563
E-Z Vac DFS Collection System	78567
Filter Minder Gauge	99-4664
Trash Holder Kit	TC26

TORO®

Count on it.