Form No. 3367-205 Rev C

TORO®

Count on it.

Parts Catalog

Z580-D Z Master®

With 52 Rear Discharge Mower

Model No. 74279TE—Serial No. 311000001 and Up

Register at www.Toro.com.

Original Instructions (EN)

Ordering Replacement Parts

To order replacement parts, please supply the part number, the quantity, and the description of each part desired.

Understanding Reference Numbers

Each identified part in an illustration has a reference number. The reference number for a part also appears in the parts list, along with other information about the part.

This catalog uses two special reference number formats, one to indicate parts in a service assembly and another to indicate the quantity of a given part in an illustration.

Service Assembly Reference Numbers

Parts in service assemblies have reference numbers in the form a:b. The a represents the reference number of the entire service assembly and the b represents a sequential number unique to each part within the service assembly.

For example, a wheel assembly might be identified by reference number 6, the tire by 6:1, the valve by 6:2, and the wheel by 6:3. When you order the assembly identified by reference number 6, you receive all parts identified by reference numbers 6:1,6:2, and 6:3. However, you may also order any part individually. Reference numbers of this type appear in illustration and in parts lists.

Reference Numbers Indicating Quantity

In an illustration, if a reference number indicates more than one part, the reference number has the form nX y. The n represents the quantity of the part, the X is the multiplication symbol, and the y represents the reference number.

For example, in an illustration, the reference number 2X 37 means that two of the parts identified by reference number 37 are indicated.

List of Abbreviations

AR: as required

ASM: assembly

BBC: blade brake control

BHTF: button head thread forming

CARR: carriage

CCW: counter clockwise

CW: clockwise

DEG: degrees

DPA: Dual Point Adjustment

ECM: electronic control module

EXT: external

FH: flat head

GA: gauge

HD: heavy-duty

HF: hex flange

HH: hex head

HHF: hex head flange

HHFTF: hex head flange thread forming

HJ: hex jam

HLH: hex lag head

HOC: height-of-cut

HSBH: hex socket button head

HSFH: hex socket flat head

HSH: hex socket head

HWH: hex washer head

HWHTF: hex washer head thread forming

HYD: hydraulic

LH: left hand

LP: Liquid Propane

NI: nylon insert

NPTF: national pipe thread fine

PFH: phillips flat head

PPH: phillips pan head

PPHTF: phillips pan head thread forming

PRH: phillips round head

PTH: phillips truss head

PTO: power-take-off

RH: right hand

ROPS: roll-over protection system

RRB: rear roller brush

SFH: slotted fillister head

SHH: slotted hex head

SHWH: slotted hex washer head

SPH: slotted pan head

SQH: square head

SRH: slotted round head

STD: standard

TAP: self tapping

TTH: torx truss head

© 2011—The Toro® Company
8111 Lyndale Avenue South
Bloomington, MN 55420

Contact us at www.Toro.com.
Printed in the USA.
All Rights Reserved

Contents

Front Frame Assembly . . . 4
Fork, Caster Wheel and Z Stand Assembly . . . 5
Traction Frame and Floor Pan Assembly . . . 6
Roll-Over Protection System Assembly . . . 7
Deluxe Seat Assembly No. 110-0838 . . . 8
Roll-Over Protection System Assembly No. 110-0877 . . . 9
Main Frame and Rear Wheel Assembly . . . 10
Hydro Control Assembly . . . 11
Engine, Exhaust and Air Intake Assembly . . . 12
Air Cleaner Assembly No. 93-2190 . . . 13
Hydro and Gearbox Assembly . . . 14
Gearbox Assembly No. 107-9887 . . . 15
Hydraulic Tank, Motor and Pump Assembly . . . 16
Tandem Pump Assembly No. 107-9885 . . . 18
Hydraulic Motor Assembly No. 112-8358 (CW) . . . 19
Hydraulic Motor Assembly No. 112-8357 (CCW) . . . 20
Hydraulic Hose System Assembly . . . 21
Fuel System and Throttle Control Assembly . . . 22
Fuel Line Assembly . . . 23
Engine Housing Assembly . . . 24
Cooling System Assembly . . . 25
Hood Assembly . . . 26
Deck Connection Assembly . . . 27
Deck Assembly . . . 28
Deck Decal Assembly No. 114-4491 . . . 30
Spindle Assembly No. 117-6158 . . . 31
Spring Idler Assembly No. 114-1812 . . . 32
Electrical Assembly . . . 33
Crankcase Assembly . . . 34
Oil Pan Assembly . . . 35
Cylinder Head Assembly . . . 36
Gear Case and Oil Filter Cartridge Assembly . . . 37
Cylinder Head Cover Assembly . . . 38
Dipstick, Guide and Oil Pump Assembly . . . 39
Main Bearing Case Assembly . . . 40
Cam Shaft and Idle Gear Assembly . . . 41
Piston and Crankshaft Assembly . . . 42
Flywheel and Fuel Camshaft Assembly . . . 43
Idle Apparatus and Stop Solenoid Assembly . . . 44
Injection Pump and Governor Assembly . . . 45
Speed Control Plate Assembly . . . 46
Nozzle Holder and Glow Plug Assembly . . . 47
Nozzle Holder Assembly . . . 48
Alternator Components Assembly . . . 50
Alternator, Pulley and Fuel Pump Cover Assembly . . . 51
Starter Assembly . . . 52
Starter Components Assembly . . . 53
Water Flange and Thermostat Assembly . . . 54
Valve and Rocker Arm Assembly . . . 55
Inlet and Exhaust Manifold Assembly . . . 56
Upper and Lower Gasket Kits . . . 57
Attachments and Accessories . . . 58

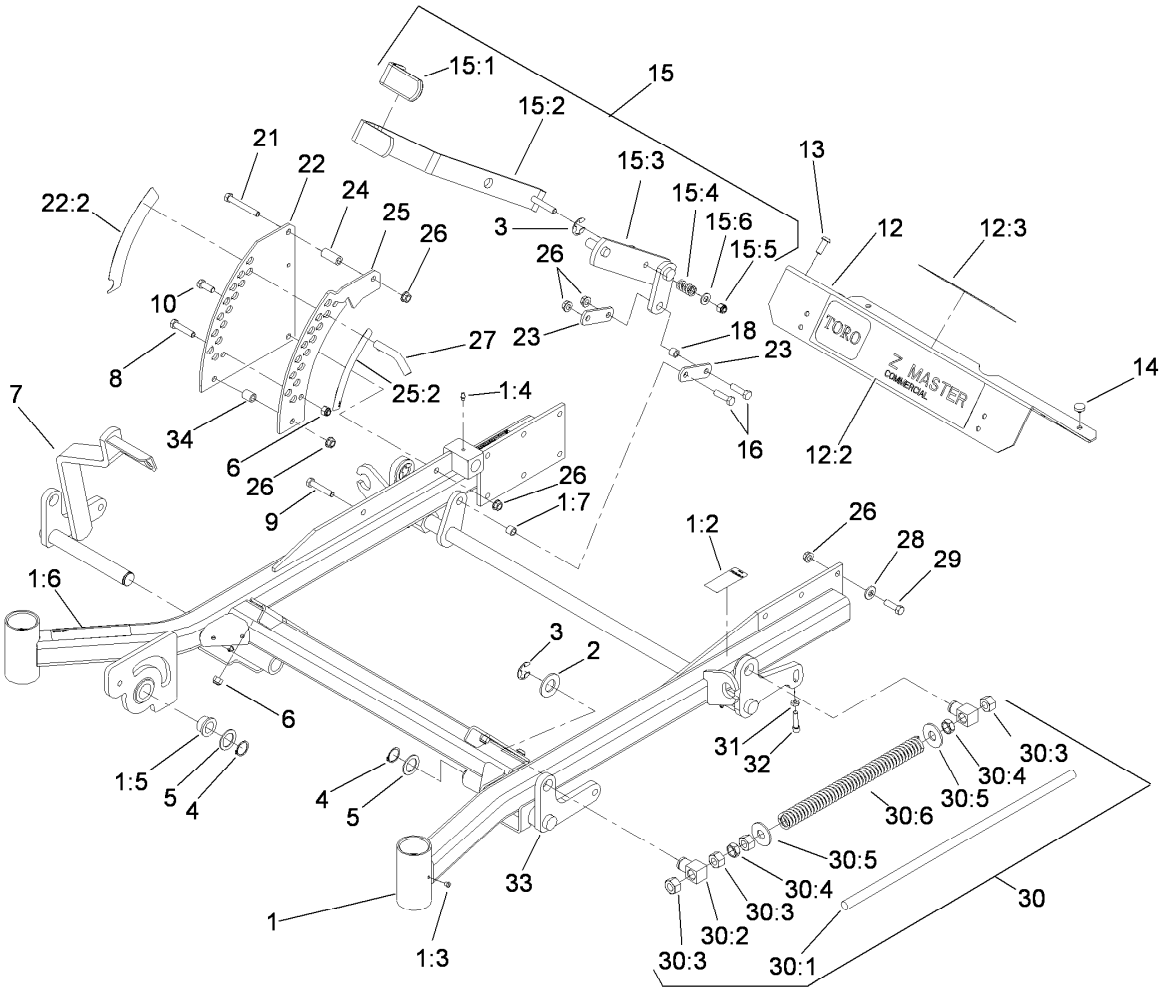

Front Frame Assembly

Ref.	Part Number	Qty.	Description
1	110-0800	1	Frame ASM
1:2	107-3968	1	Decal-Brake, Parking
1:3	1-811010	2	Plug
1:4	302-19	5	Fitting-Grease
1:5	94-1291	2	Bushing
1:6	107-3969	1	Decal-Warning
1:7	103-1918	1	Bushing
2	3256-29	4	Washer-Flat
3	32151-103	5	Ring-Retaining, EXT
4	32151-29	2	Ring-Retaining
5	1-523157	2	Washer-Spacer
6	3296-39	5	Nut-Lock, NI
7	108-7786-01	1	RH Front Deck Lift ASM
8	323-9	1	Screw-HH
9	323-10	1	Screw-HH
10	323-6	1	Screw-HH
12	107-3976	1	Footrest
12:2	106-7451	1	Decal
12:3	107-1866	1	Decal-Danger, Slope
13	3274-94	4	Screw-HSBH
14	1-513658	2	Bumper
15	110-5860	1	Deck Lift Handle ASM
15:1	1-633295	1	Grip-Lever, Lift
15:2	103-2083	1	Lever-Lift
15:3	103-2064	1	Arm-Lift, Deck
15:4	1-633325	1	Spring-Compression

Ref.	Part Number	Qty.	Description
15:5	3296-39	1	Nut-Lock, NI
15:6	3256-24	1	Washer-Flat
16	323-29	2	Screw-HH
18	103-1918	1	Bushing
21	323-11	1	Screw-HH
22	117-0367	1	Plate-HOC, Outer
22:2	107-3961	1	Decal-Height, Deck
23	1-633068	2	Arm-Lift, Deck
24	1-633082	1	Bushing-Lever, Lift
25	117-0370	1	Plate-HOC, Inner
25:2	107-3962	1	Decal-Height, Deck
26	3290-357	17	Nut-HHF, Whiz
27	109-8757	1	Pin-HOC
28	98-5975	12	Washer-Belleville
29	323-7	12	Screw-HH
30		2	Front Frame Spring ASM ●
30:1	1-633096	1	Rod-Lift, Deck
30:2	1-633441	2	Swivel-Deck Mount, Rear
30:3	3217-11	4	Nut-Hex
30:4	3218-6	2	Nut-Jam
30:5	3256-7	2	Washer-Flat
30:6	1-633064	1	Spring-Support, Deck
31	3218-2	2	Nut-Jam
32	3274-18	2	Screw-HSH
33	106-8984-01	1	LH Deck Lift ASM
34	1-633080	1	Bushing-Lever, Lift

● Not serviced separately

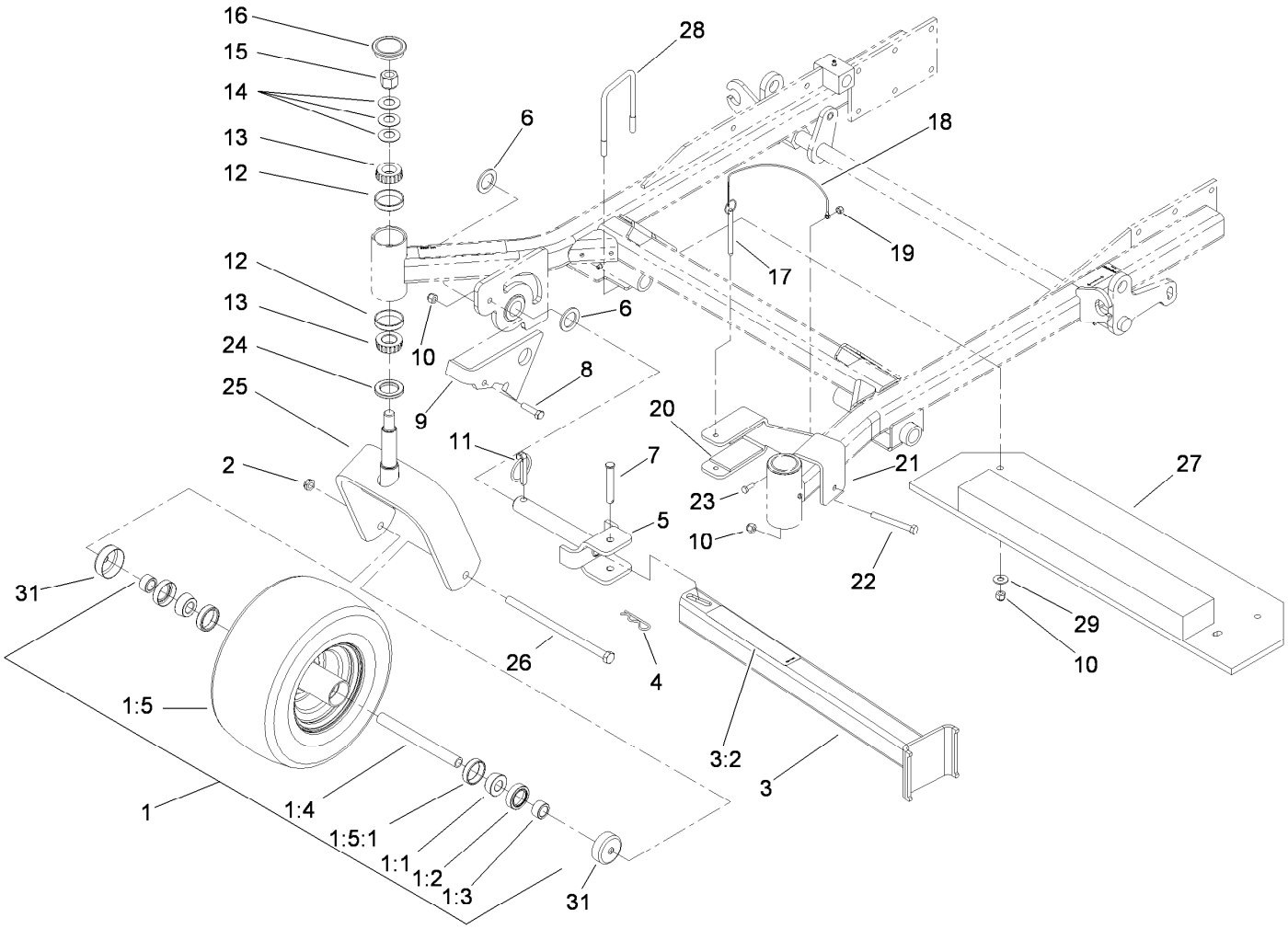

Fork, Caster Wheel and Z Stand Assembly

Ref.	Part Number	Qty.	Description
1	109-9125	2	Wheel And Tire ASM
1:1	1-633585	2	Bearing-Cone, Taper
1:2	103-0063	2	Seal-Caster
1:3	103-3051	2	Spacer-Nut
1:4	103-5156	1	Axle-Caster
1:5	109-9124	1	Wheel And Tire ASM
1:5:1	1-633584	1	Bearing-Cup
2	3296-23	2	Nut-Lock, NI
3	107-1874	1	Leg ASM
3:2	106-7464	1	Decal-Z Stand
4	3290-355	1	Pin-Hair
5	100-9692-01	1	Pivot Pin ASM
6	3-6781	2	Washer-Thrust
7	283-55	1	Pin-Clevis
8	323-8	1	Screw-HH
9	100-9686-01	1	Bracket-Latch
10	3296-39	6	Nut-Lock, NI
11	283-71	1	Pin-Lynch
12	254-72	4	Bearing-Cup, Tapered

Ref.	Part Number	Qty.	Description
13	254-94	4	Bearing-Cone, Tapered
14	1-633508	6	Washer-Bellville
15	3296-51	2	Nut-Lock, NI
16	103-4882	2	Cap-Grease
17	105-1647	1	Pin-Hitch, Cotterless
18	100-9385	1	Lanyard-Nylon
19	3296-42	1	Nut-Lock, NI
20	100-6547	2	Cushion-Rubber
21	100-6542-01	1	Bracket-Cradle
22	323-20	1	Screw-HH
23	321-4	1	Screw-HH
24	1-543511	2	Seal-Grease
25	1-642111-01	2	Caster
26	325-24	2	Screw-HH
27	107-9874-01	1	Weight ASM
28	110-0817	2	U-Bolt, 3 Inch
29	3256-4	4	Washer-Flat
31	103-2768	4	Guard-Seal

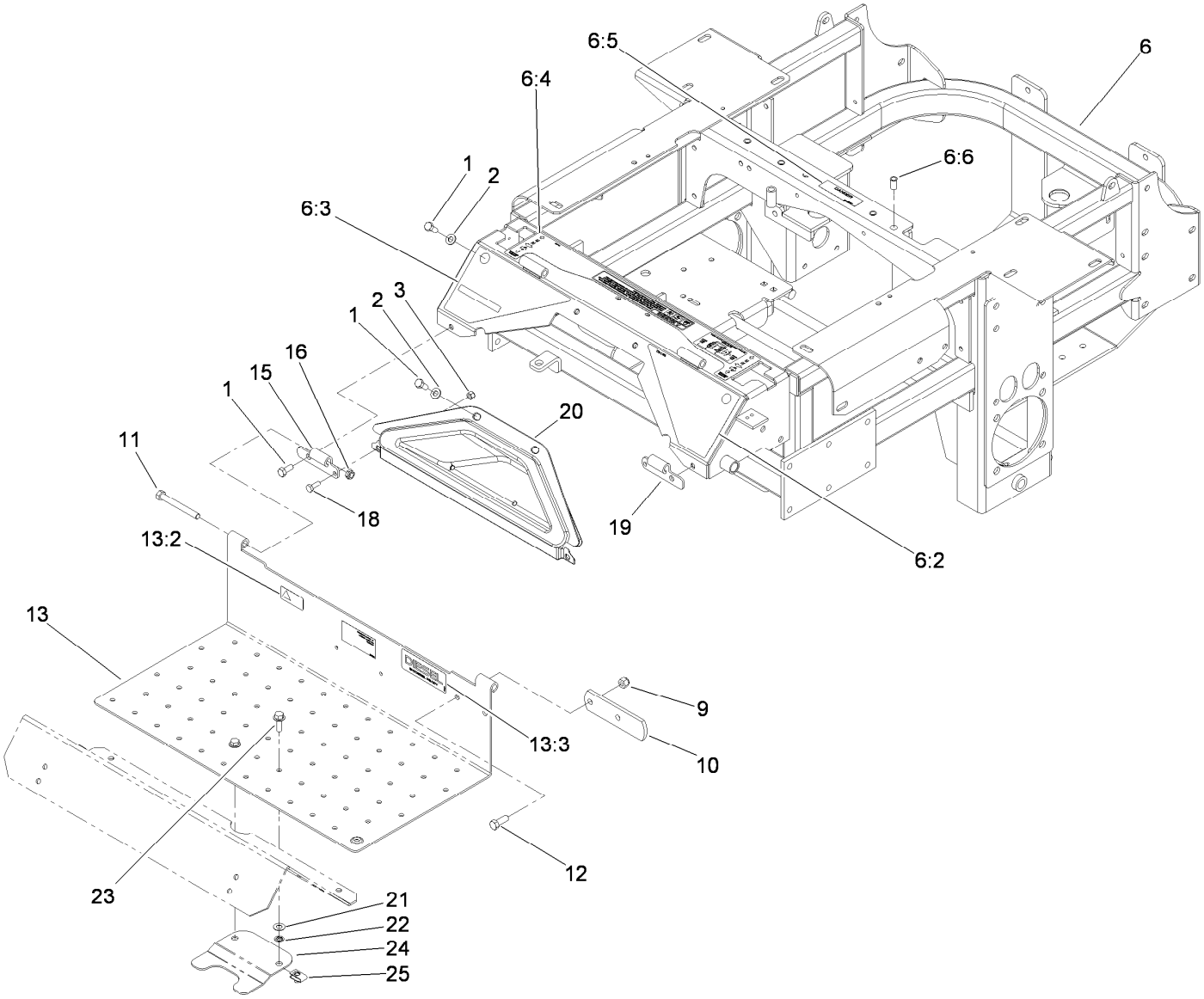

Traction Frame and Floor Pan Assembly

Ref.	Part Number	Qty.	Description
1	322-43	6	Screw-HH
2	3256-70	4	Washer-Flat
3	3296-42	2	Nut-Lock, NI
6	115-2757	1	Traction Frame ASM
6:2	107-3963	1	Decal-Danger, Left
6:3	107-3964	1	Decal-Warning, Right
6:4	110-0820	1	Decal-Console, Top (Ce)
6:5	98-1977	1	Decal-Warning
6:6	32148-11	5	Insert-Threaded
9	3296-39	2	Nut-Lock, NI
10	1-633964-03	1	Stop-Brake, Park
11	323-20	2	Screw-HH
12	323-6	2	Screw-HH

Ref.	Part Number	Qty.	Description
13	115-3851	1	Floor Pan ASM
13:2	98-4387	1	Decal-Protection, Ear
13:3	114-5879	1	Decal-Diesel, Bio-Ready
15	106-7488-03	1	Hinge-Floorpan, LH
16	3296-59	2	Nut-Lock, NI
18	321-4	2	Screw-HH
19	106-7489-03	1	Hinge-Floorpan, RH
20	106-7498	1	Pocket
21	73-0041	2	Washer-Thrust
22	117-2749	2	Nut-Push
23	3234-29	2	Screw-HHF
24	119-0395-03	1	Adapter-Captive
25	94-2413	2	U-Nut

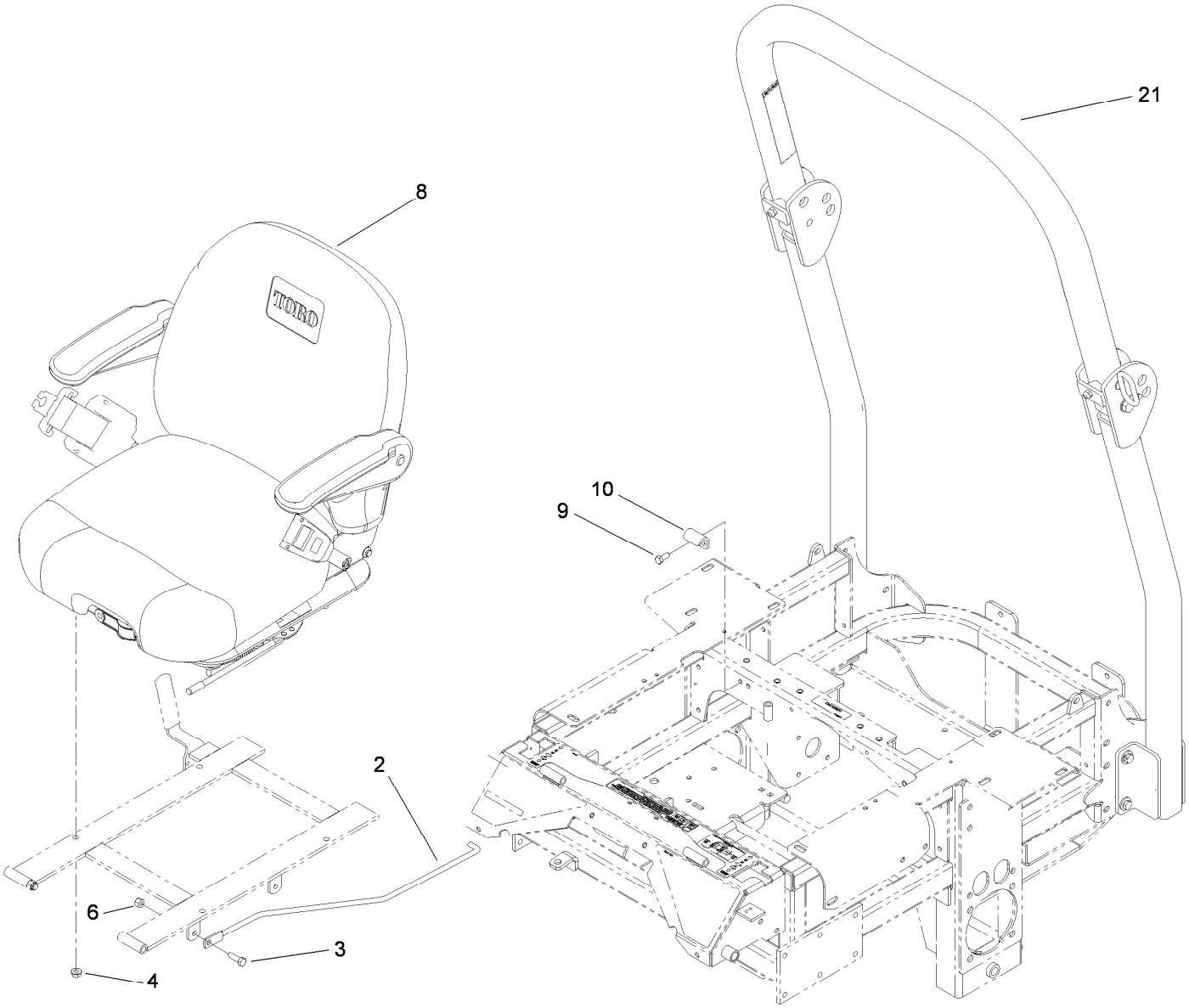

Roll-Over Protection System Assembly

Ref.	*Part Number*	*Qty.*	*Description*
2	108-5341	1	Rod-Prop, Seat
3	322-5	1	Screw-HH
4	32128-20	4	Nut-HF
6	3296-29	3	Nut-Lock, NI
8	110-0838	1	Deluxe Seat ASM
9	322-3	2	Screw-HH
10	107-3058	1	Catch-Latch, Seat
21	110-0877	1	ROPS Kit

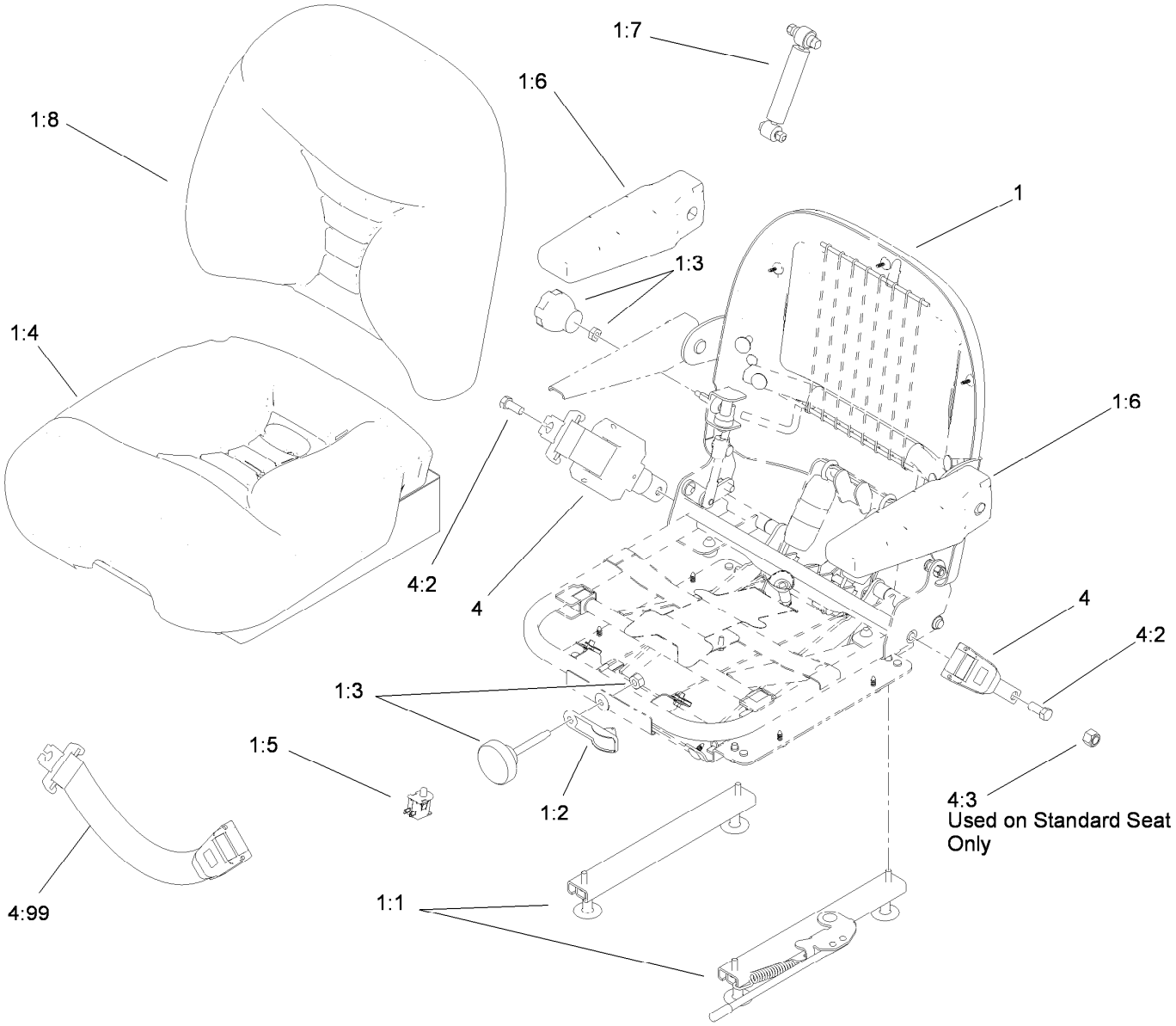

Deluxe Seat Assembly No. 110-0838

Ref.	*Part Number*	*Qty.*	*Description*
1	112-8355	1	Seat-Suspension
1:1	107-1880	1	Seat Track Kit
1:2	107-1885	1	Weight Indicator Kit
1:3	107-1881	1	Knob Kit
1:4	107-1883	1	Bottom Cushion Kit
1:5	82-2190	1	Switch-Bail
1:6	107-1887	1	Armrest Kit
1:7	107-1884	1	Shock Absorber Kit
1:8	112-8356	1	Cushion-Back
4	110-0883	1	Retractable Seatbelt Kit
4:2	3212-4	2	Screw-HH
4:3	3296-7	2	Nut-Lock
4:99	109-6226	1	Seat Belt Extension Kit

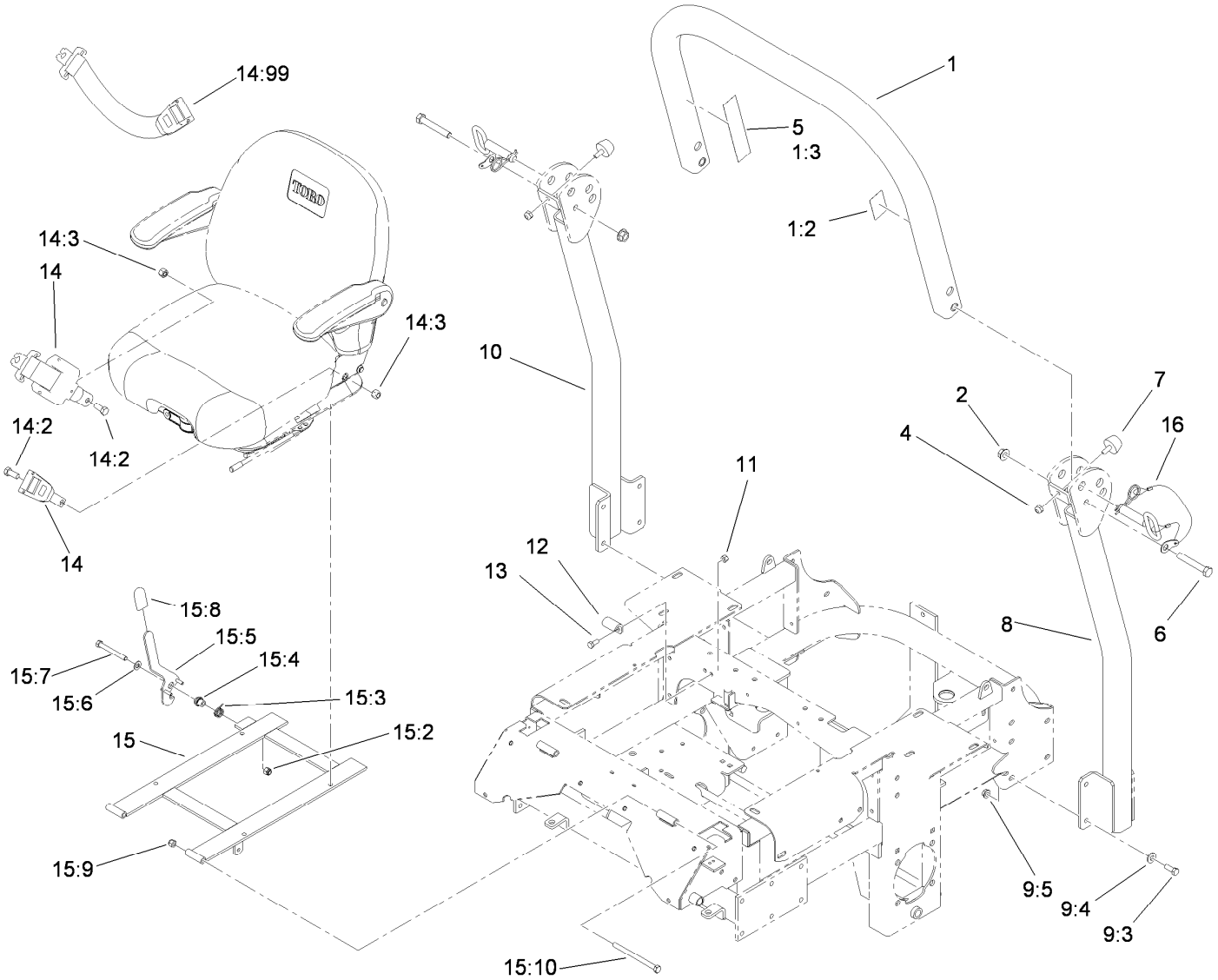

Roll-Over Protection System Assembly No. 110-0877

Ref.	Part Number	Qty.	Description
1		1	Upper Tube ASM ■
1:2	107-2101	1	Decal-ROPS
1:3	107-2102	1	Decal-Warning, Folding ROPS
2	32128-23	2	Nut-HF
4	3296-73	2	Nut-Lock, NI
5	107-3069	1	Decal-Warning, Folding ROPS
6	325-13	2	Screw-HH
7	109-2365	2	Rubber Bumper ASM (W/Stud)
8		1	Tube-Support, LH ■
9		1	Bag-Bolt, ROPS ● ■
9:3	323-6	8	Screw-HH
9:4	98-5975	8	Washer-Belleville
9:5	3290-357	8	Nut-HHF, Whiz
10		1	Tube-Support, RH ■
11	3296-29	2	Nut-Lock, NI

Ref.	Part Number	Qty.	Description
12	107-3058	1	Catch-Latch, Seat
13	322-3	2	Screw-HH
14	110-0883	1	Retractable Seatbelt Kit
14:2	3212-4	2	Screw-HH
14:3	3296-7	2	Nut-Lock
14:99	109-6226	1	Seat Belt Extension Kit
15	110-0874	1	Seatframe ASM
15:2	3296-39	1	Nut-Lock, NI
15:3	107-0076	1	Spring-Torsion
15:4	107-0075	1	Bushing-Latch, Seat
15:5	107-3083	1	Latch ASM
15:6	3256-24	1	Washer-Flat
15:7	323-20	1	Screw-HH
15:8	103-4434	1	Grip-Lever
15:9	3296-39	2	Nut-Lock, NI
15:10	323-39	2	Screw-HH
16	103-4553	2	ROPS Fold Pin ASM

● Not illustrated

■ Not serviced separately

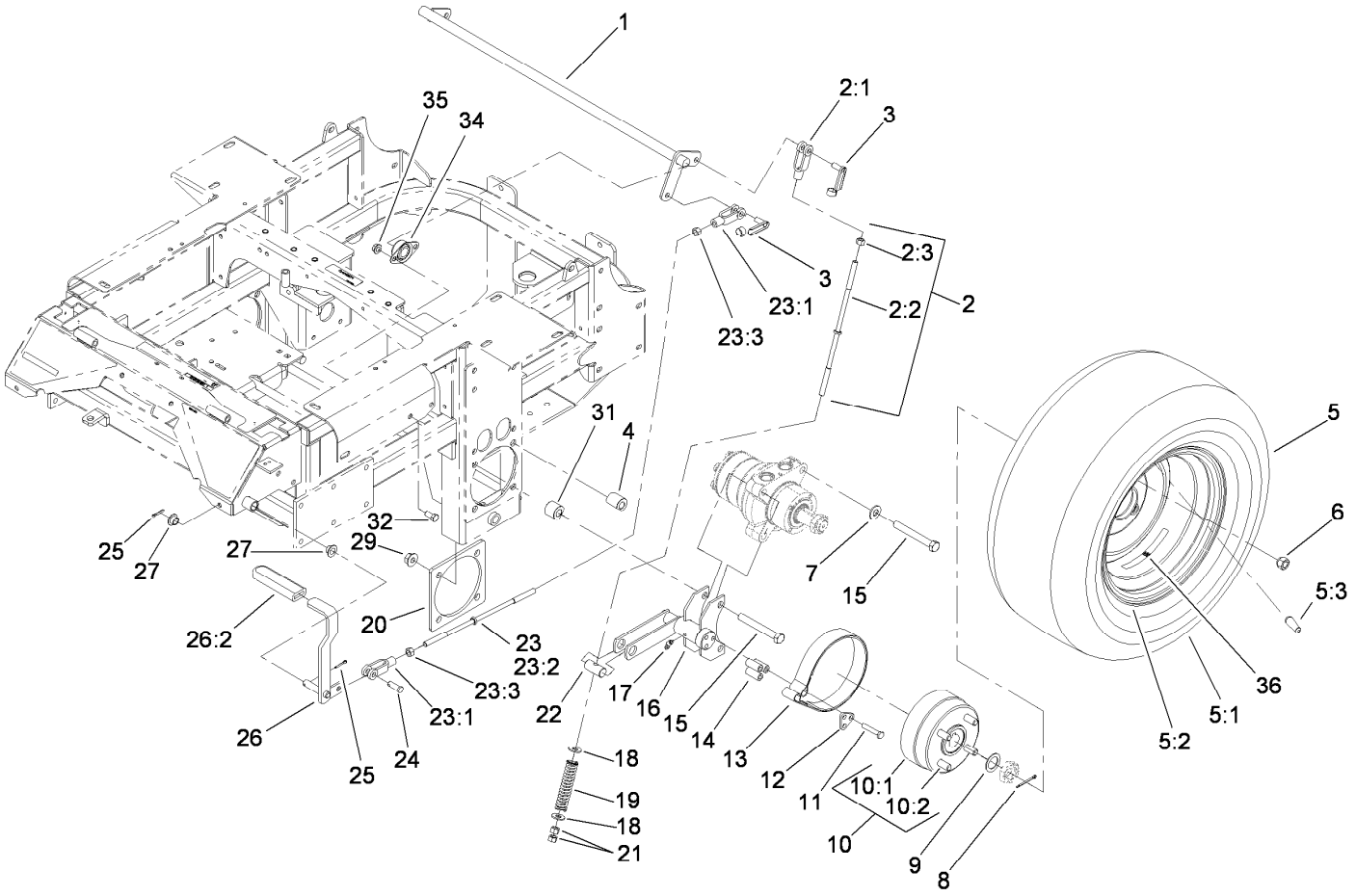

Main Frame and Rear Wheel Assembly

Ref.	Part Number	Qty.	Description
1	1-632217-03	1	Shaft-Brake
2	108-5963	2	Brake Rod ASM
2:1	1-633131	1	Yoke-Linkage, Brake
2:2	108-5980	1	Rod-Brake
2:3	3219-3	1	Nut-Hex
3	103-2399	3	Pin-Spring, Clevis
4	114-1185	4	Spacer-Wheel, Long
5	1-653010	2	Wheel And Tire ASM
5:1	1-653160	1	Tire
5:2	1-653158	1	Wheel
5:3	232-27	1	Stem-Valve
6	242-50	8	Nut-Lug
7	87-7270	4	Washer-Thrust
8	1-806800	2	Pin-Cotter
9	1-523157	2	Washer-Spacer
10	103-0590	2	Hub And Wheel ASM
10:1	103-0589	1	Wheel Hub ASM
10:2	1-633926	4	Stud-Wheel
11	322-9	6	Screw-HH
12	103-0374	2	Retainer-Band, Brake
13	103-0355	2	Band-Brake
14	103-0384	6	Spacer
15	325-18	8	Screw-HH

Ref.	Part Number	Qty.	Description
16	103-0352-03	2	Bracket-Brake
17	1481	2	Fitting-Grease
18	3256-4	4	Washer-Flat
19	1-633454	2	Spring-Brake
20	103-3271-03	2	Plate-Reinforcement
21	3219-3	4	Nut-Hex
22	1-633144	2	Pin-Trunion
23	108-5962	1	Brake Rod ASM
23:1	1-633131	2	Yoke-Linkage, Brake
23:2	1-633477	1	Rod-Brake
23:3	3219-3	2	Nut-Hex
24	1-808285	1	Pin-Clevis
25	3272-10	2	Pin-Cotter
26	1-634500	1	Brake Lever ASM
26:2	1-633268	1	Grip-Lever
27	1-513140	2	Bearing-Control
29	32128-49	8	Nut-HHF
31	114-1184	4	Spacer-Wheel, Short
32	323-4	4	Screw-HH
34	1-633102	2	Bearing-Flange, Side
35	3290-357	4	Nut-HHF, Whiz
36	109-7949	2	Decal

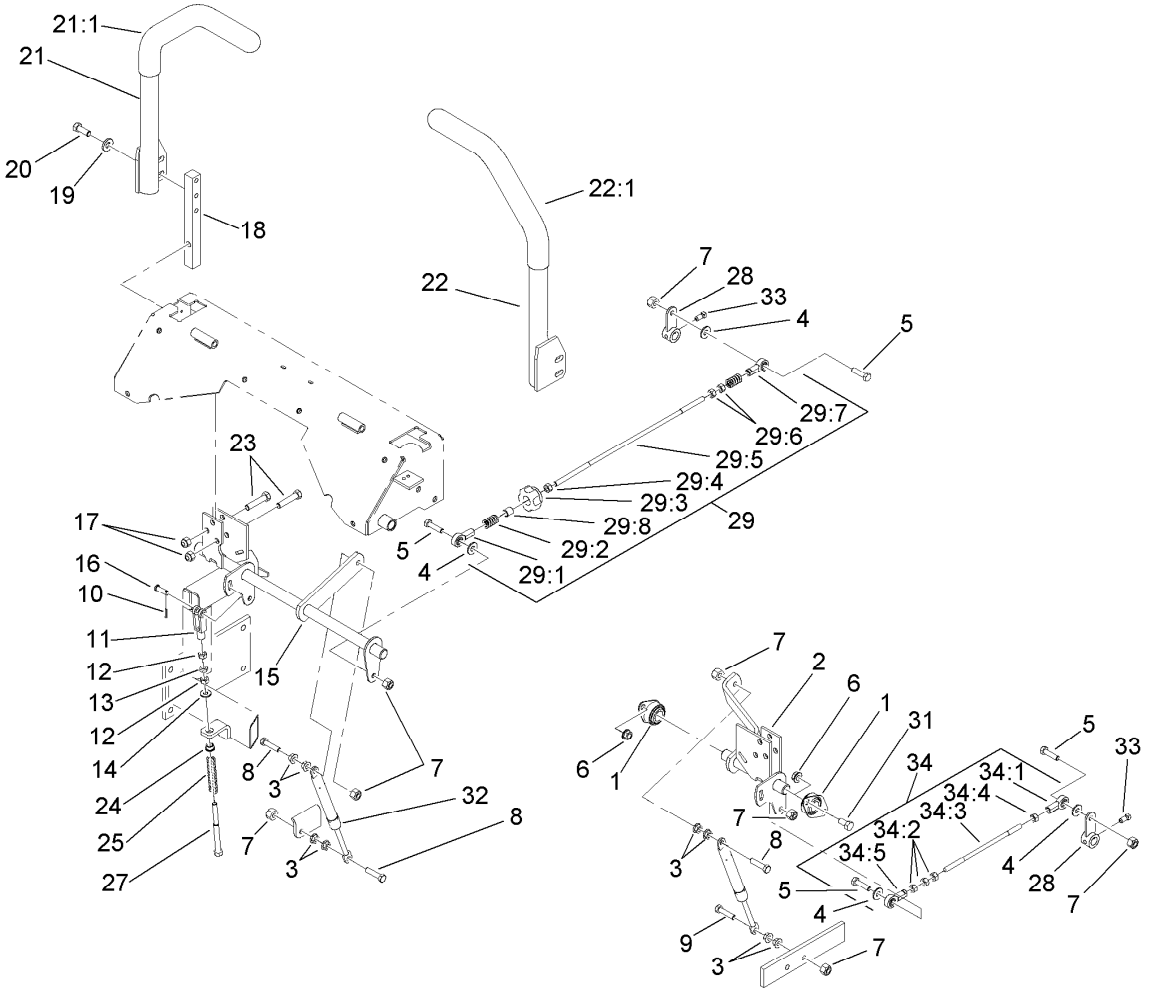

Hydro Control Assembly

Ref.	Part Number	Qty.	Description
1	1-633102	4	Bearing-Flange, Side
2	107-3480	1	LH Motion Control ASM
3	32128-20	10	Nut-HF
4	3256-3	4	Washer-Flat
5	322-6	4	Screw-HH
6	3290-357	6	Nut-HHF, Whiz
7	3296-29	8	Nut-Lock, NI
8	1-403180	3	Screw-HH
9	322-41	1	Screw-HH
10	3272-5	2	Pin-Cotter
11	1-303105	2	Yoke-Adjustable
12	3219-2	4	Nut-Hex
13	3220-2	2	Nut-Jam
14	3256-2	2	Washer-Flat
15	107-3481	1	RH Motion Control ASM
16	1-808280	2	Pin-Clevis
17	3296-39	6	Nut-Lock, NI
18	103-0407	2	Arm-Shaft, Control
19	98-5975	4	Washer-Belleville
20	323-6	4	Screw-HH
21	108-7237	1	RH Lever ASM
21:1	106-9987	1	Grip-Control, Motion
22	108-7238	1	LH Lever ASM
22:1	106-9987	1	Grip-Control, Motion

Ref.	Part Number	Qty.	Description
23	323-9	6	Screw-HH
24	1-603735	2	Bushing-Flanged
25	1-603807	2	Spring-Return, Neutral
27	1-603737	2	Bolt-Return, Neutral
28	107-3470-03	2	Hydraulic Control Arm ASM
29	107-3474	1	RH Control Rod ASM
29:1	1-543017	1	Balljoint-RH
29:2	1-323245	2	Spring-Compression
29:3	103-3060	1	Knob-Tracking
29:4	3219-2	1	Nut-Hex
29:5	107-3472	1	Rod-Control, RH
29:6	1-804524	2	Nut
29:7	1-633152	1	Balljoint-LH
29:8	103-1166	1	Spacer-Tube, Pump Link
31	323-4	6	Screw-HH
32	109-2339	2	Damper-Control, Motion
33	1-803022	2	Screw-Set
34	107-3475	1	LH Control Rod ASM
34:1	1-543017	1	Balljoint-RH
34:2	3219-2	3	Nut-Hex
34:3	107-3473	1	Rod-Control, LH
34:4	1-804524	1	Nut
34:5	1-633152	1	Balljoint-LH

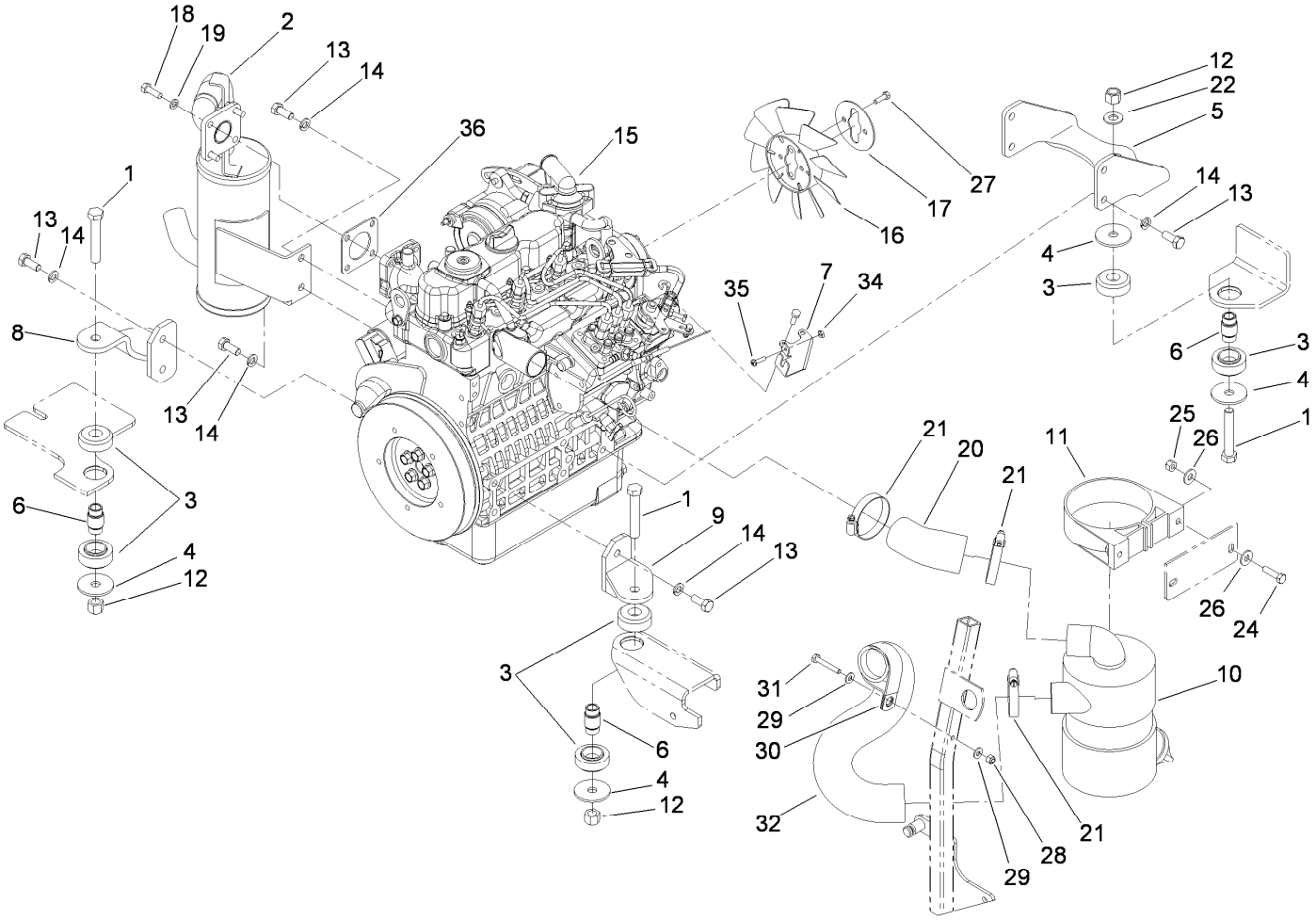

Engine, Exhaust and Air Intake Assembly

Ref.	Part Number	Qty.	Description
1	325-12	3	Screw-HH
2	107-9909	1	Muffler
3	107-9914	3	Mount-Isolation
4	55-7960	4	Washer-Large
5	107-9917-03	1	Bracket-Engine Mount, Rear
6	110-0300	3	Spacer
7	108-5922	1	Bracket-Support, Throttle
8	107-9920-03	1	RH Engine Support ASM
9	107-9930-03	1	LH Engine Support ASM
10	93-2190	1	Air Cleaner ASM
11	95-5806	1	Bracket-Mounting
12	3296-23	3	Nut-Lock, NI
13	43-0090	10	Screw-HH
14	42-9600	10	Washer-Lock, Spring
15	114-8220	1	Engine-Kubota
16	110-0814	1	Fan
17	110-0816	1	Plate-Reatainer, Fan

Ref.	Part Number	Qty.	Description
18	33114-025	4	Screw-HH
19	3253-4	4	Washer-Lock
20	108-5371	1	Hose-Intake, Air Cleaner
21	1-643009	3	Clamp-Hose
22	3256-26	1	Washer-Flat
24	322-6	2	Screw-HH
25	3296-29	2	Nut-Lock, NI
26	3256-23	4	Washer-Flat
27	33113-020	2	Screw-HH
28	3296-42	1	Nut-Lock, NI
29	3256-22	2	Washer-Flat
30	1-643241	1	Clip-Loom
31	321-10	1	Screw-HH
32	108-5370	1	Hose-Intake, Engine
34	3217-26	1	Nut-Hex
35	110-0863	1	Screw-Torx
36	99-8343	1	Gasket-Muffler

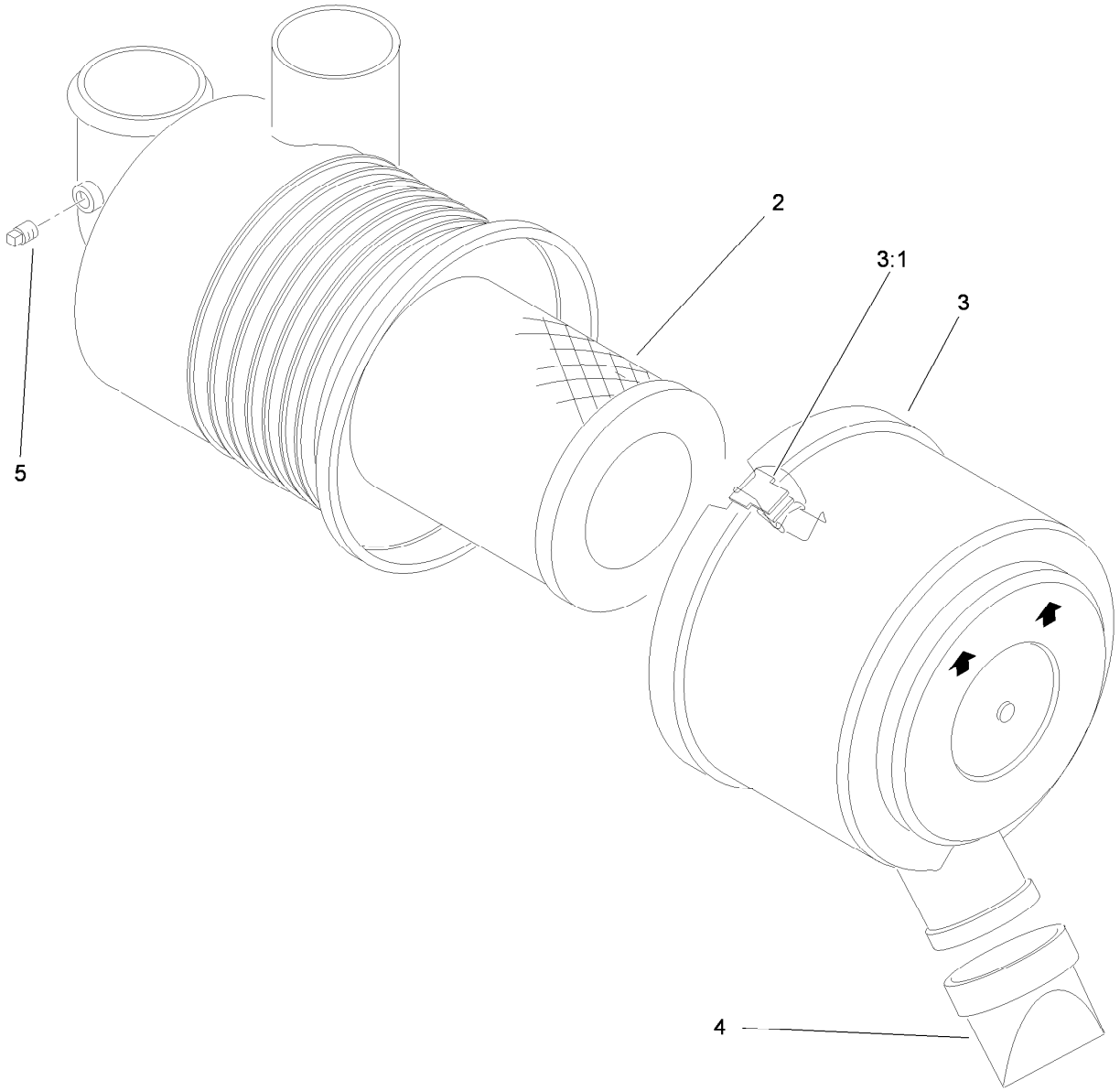

Air Cleaner Assembly No. 93-2190

Ref.	*Part Number*	*Qty.*	*Description*
2	108-3811	1	Filter-Air
3	94-3652	1	Cover ASM
3:1	1-643283	2	Latch-Cleaner, Air
4	87-9400	1	Valve-Vacuator
5	285-17	1	Plug-Pipe

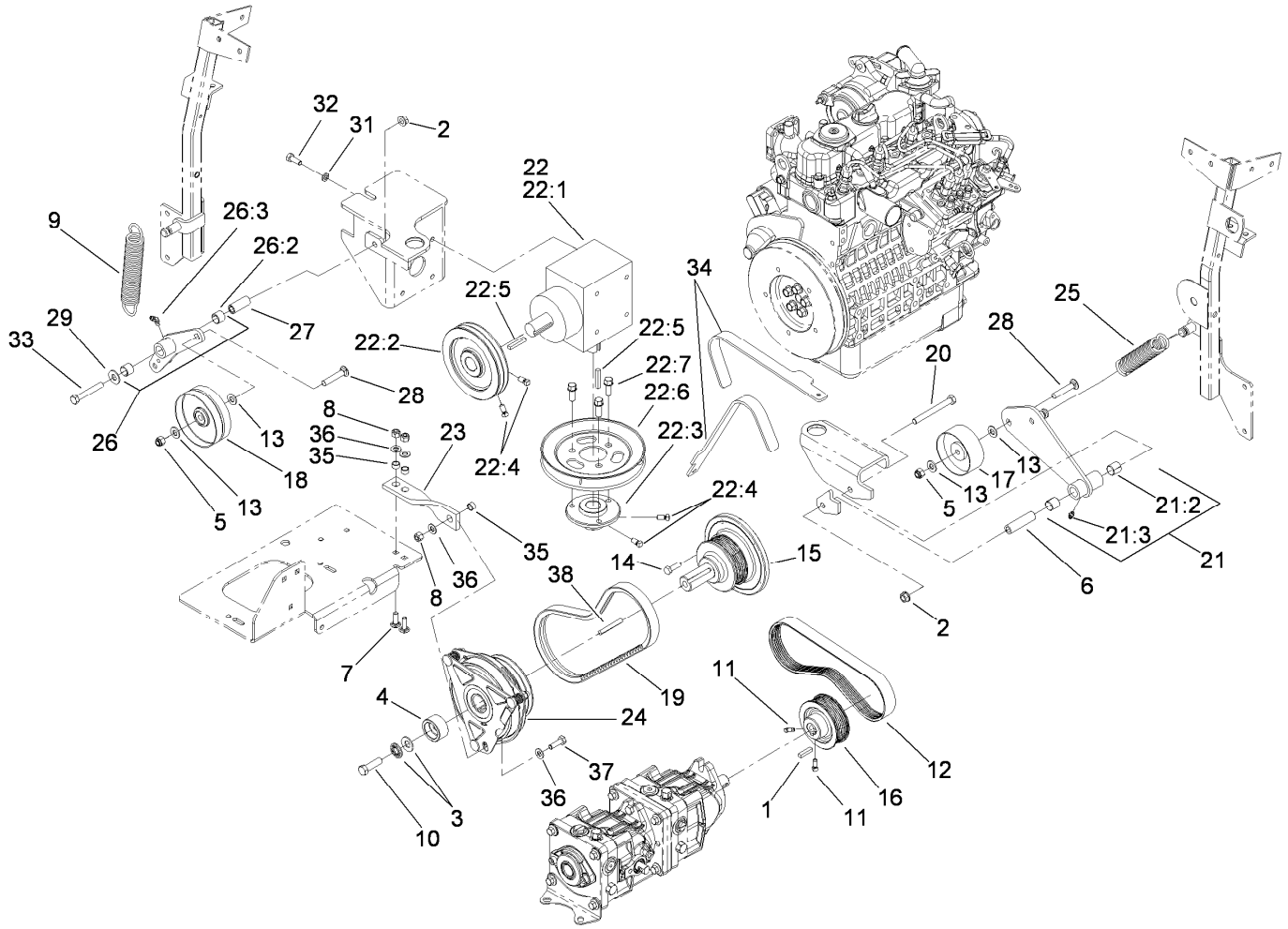

Hydro and Gearbox Assembly

Ref.	Part Number	Qty.	Description
1	5-0698	1	Key
2	3290-357	2	Nut-HHF, Whiz
3	1-603610	2	Washer-Spring
4	114-8152	1	Retainer-Clutch
5	3296-39	2	Nut-Lock, NI
6	1-603384	1	Bushing-Pivot, Idler
7	3230-22	2	Screw-CARR
8	3296-29	3	Nut-Lock, NI
9	119-0392	1	Spring-Extension
10	3212-6	1	Screw-HH
11	1-803022	2	Screw-Set
12	107-9910	1	Belt-V
13	3256-24	5	Washer-Flat
14	33114-025	5	Screw-HH
15	112-2335	1	Stub Shaft
16	108-5976	1	Pulley
17	108-5910	1	Pulley-Flat
18	110-0803	1	Pulley-Flat
19	110-0805	1	Belt-V
20	323-15	1	Screw-HH
21	108-5939	1	Pump Idler Arm ASM
21:2	1-513034	2	Sleeve-Bearing
21:3	302-5	1	Fitting-Grease
22		1	Gearbox ASM ●
22:1	107-9887	1	Gearbox-90 DEG

Ref.	Part Number	Qty.	Description
22:2	108-5912	1	Pulley
22:3	112-3894	1	Hub-Pulley
22:4	1-803022	4	Screw-Set
22:5	67-7490	2	Key-Square
22:6	108-5979	1	Pulley-B Section
22:7	92-1624	3	Screw-HWH
23	112-1781	1	Strap-Stop, Clutch
24	112-2320	1	Clutch-Magnetic
25	119-0394	1	Spring-Extension
26	112-2354	1	Gearbox Idler ASM (W/Bearings)
26:2	103-4681	2	Sleeve-Bearing
26:3	1481	1	Fitting-Grease
27	1-603044	1	Bushing
28	3231-6	2	Screw-CARR
29	3256-4	1	Washer-Flat
31	3253-4	4	Washer-Lock
32	322-4	4	Screw-HH
33	323-12	1	Screw-HH
34	110-0876	1	Tool-Alignment, Pulley
35	65-9820	3	Spacer
36	3256-23	4	Washer-Flat
37	322-5	1	Screw-HH
38	5-1336	1	Key-Square

● Not serviced separately

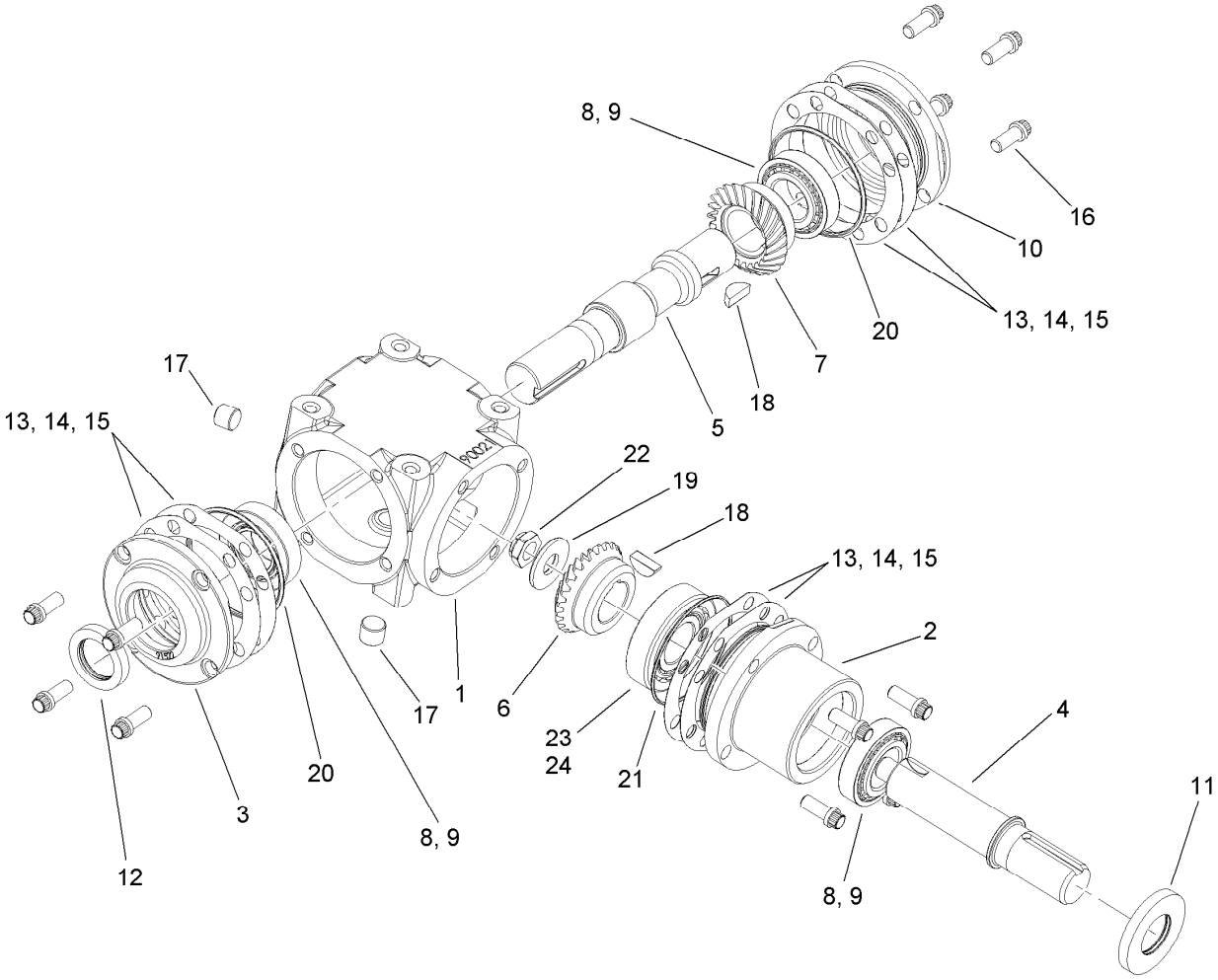

Gearbox Assembly No. 107-9887

Ref.	*Part Number*	*Qty.*	*Description*
1	110-0843	1	Case
2	110-0853	1	Housing-Pinion
3	100-4566	1	Cap-End, Open
4	110-0844	1	Shaft-Pinion
5	110-0845	1	Shaft-Cross
6	110-0847	1	Gear-Shaft, Cross
7	110-0846	1	Gear-Pinion
8	110-0848	3	Bearing-Cup
9	110-0849	3	Bearing-Cone
10	100-4574	1	Cap-End, Closed
11	100-4575	1	Seal
12	110-0850	1	Seal-Shaft, Cross
13	100-4591	1	Shim-Brown, .010In
14	100-4592	1	Shim-Blue, .005In
15	100-4593	1	Shim-Green, .003In
16	100-4578	12	Screw
17	100-4579	2	Plug
18	3257-33	2	Key-Woodruff
19	100-4581	1	Washer
20	100-4582	2	O-Ring
21	110-0851	1	O-Ring
22	110-0852	1	Nut Lock
23	100-5817	1	Bearing-Cup
24	100-5816	1	Bearing-Cone

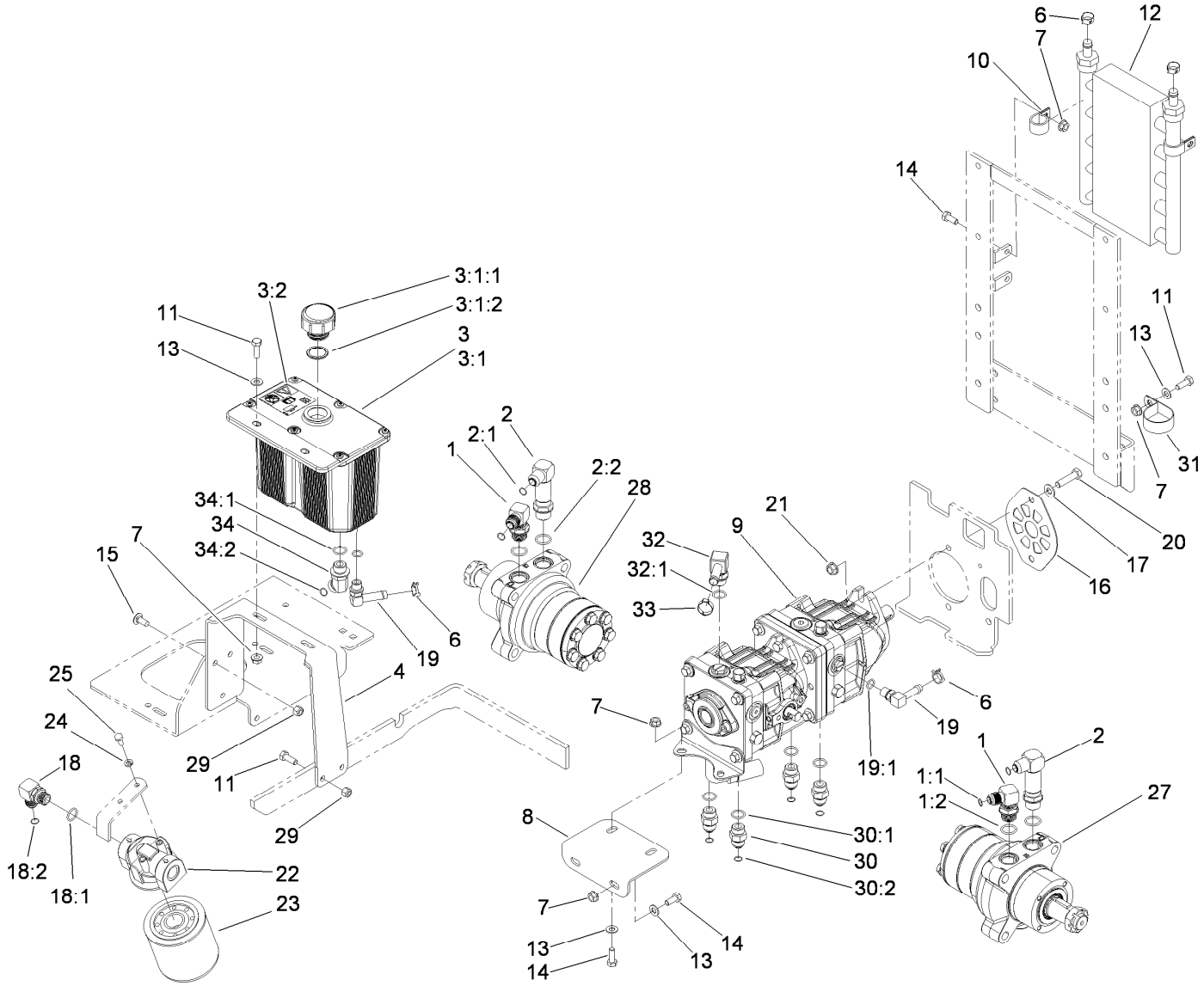

Hydraulic Tank, Motor and Pump Assembly

Ref.	Part Number	Qty.	Description
1	1-633605	2	Fitting-HYD, 90 DEG
1:1	1-603992	1	O-Ring
1:2	237-80	1	O-Ring
2	108-5323	2	Fitting-Elbow-90
2:1	1-603992	1	O-Ring
2:2	237-80	1	O-Ring
3	108-5320	1	Hydraulic Tank ASM
3:1		1	Tank-Hydraulic ●
3:1:1	103-1948	1	Cap-Reservoir, HYD
3:1:2	103-1949	1	Gasket-Cap
3:2	115-4212	1	Decal-Warning
4	108-5352-03	1	Bracket-Tank, Hydraulic
6	110-6242	4	Clamp-Hose
7	32128-20	11	Nut-HF
8	107-3462-03	1	Bracket-Pump, Front
9	107-9885	1	Tandem Pump ASM
10	110-0824	4	R-Clamp
11	322-5	4	Screw-HH
12	114-8168	1	Cooler-Oil, Hydro

Ref.	Part Number	Qty.	Description
13	3256-23	7	Washer-Flat
14	322-3	8	Screw-HH
15	3230-23	3	Screw-CARR
16	108-5367-03	1	Plate-Shield, Pump
17	3256-24	2	Washer-Flat
18	103-2153	1	Fitting-90 DEG
18:1	1-603920	1	O-Ring
18:2	1-603992	1	O-Ring
19	109-6449	2	Fitting-Elbow, 90
19:1	237-42	1	O-Ring
20	323-8	2	Screw-HH
21	3290-357	2	Nut-HHF, Whiz
22	86-9080	1	Head-Filter
23	67-8110	1	Cartridge-Filter, Oil
24	1-805004	2	Washer-Lock
25	321-3	2	Screw-HH
27	112-8357	1	HYD Motor ASM (CCW)
28	112-8358	1	HYD Motor ASM (CW)
29	3296-29	4	Nut-Lock, NI

● Not serviced separately

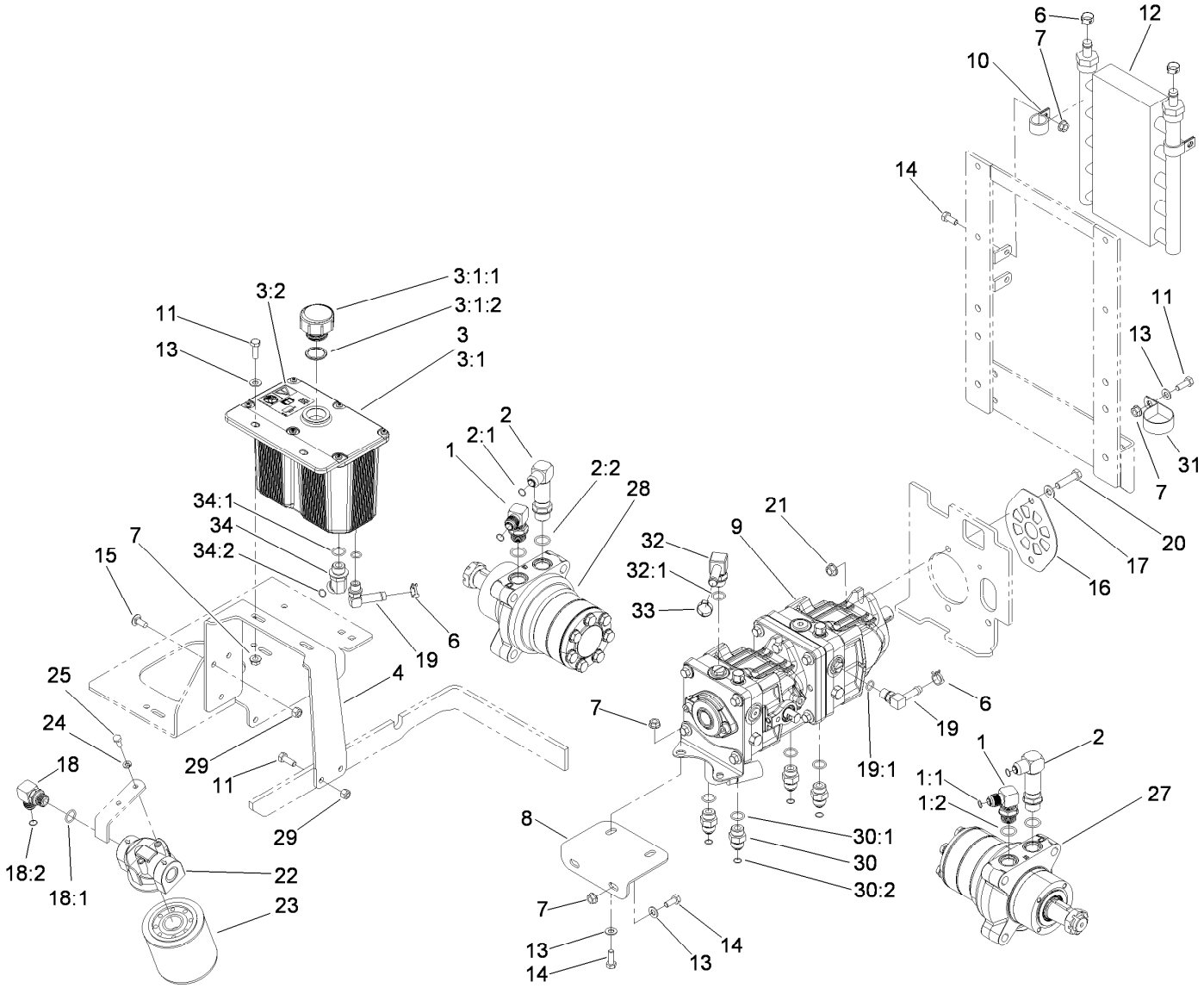

Hydraulic Tank, Motor and Pump Assembly (continued)

Ref.	Part Number	Qty.	Description
30	1-603990	4	Fitting-Straight
30:1	1-603920	1	O-Ring
30:2	1-603992	1	O-Ring
31	2412-147	1	Clamp
32	108-5316	1	Fitting-Elbow, 90 DEG

Ref.	Part Number	Qty.	Description
32:1	237-79	1	O-Ring
33	103-2104	1	Clamp-Hose
34	1-523221	1	Fitting-HYD, 45 DEG
34:1	1-603920	1	O-Ring
34:2	1-603992	1	O-Ring

● Not serviced separately

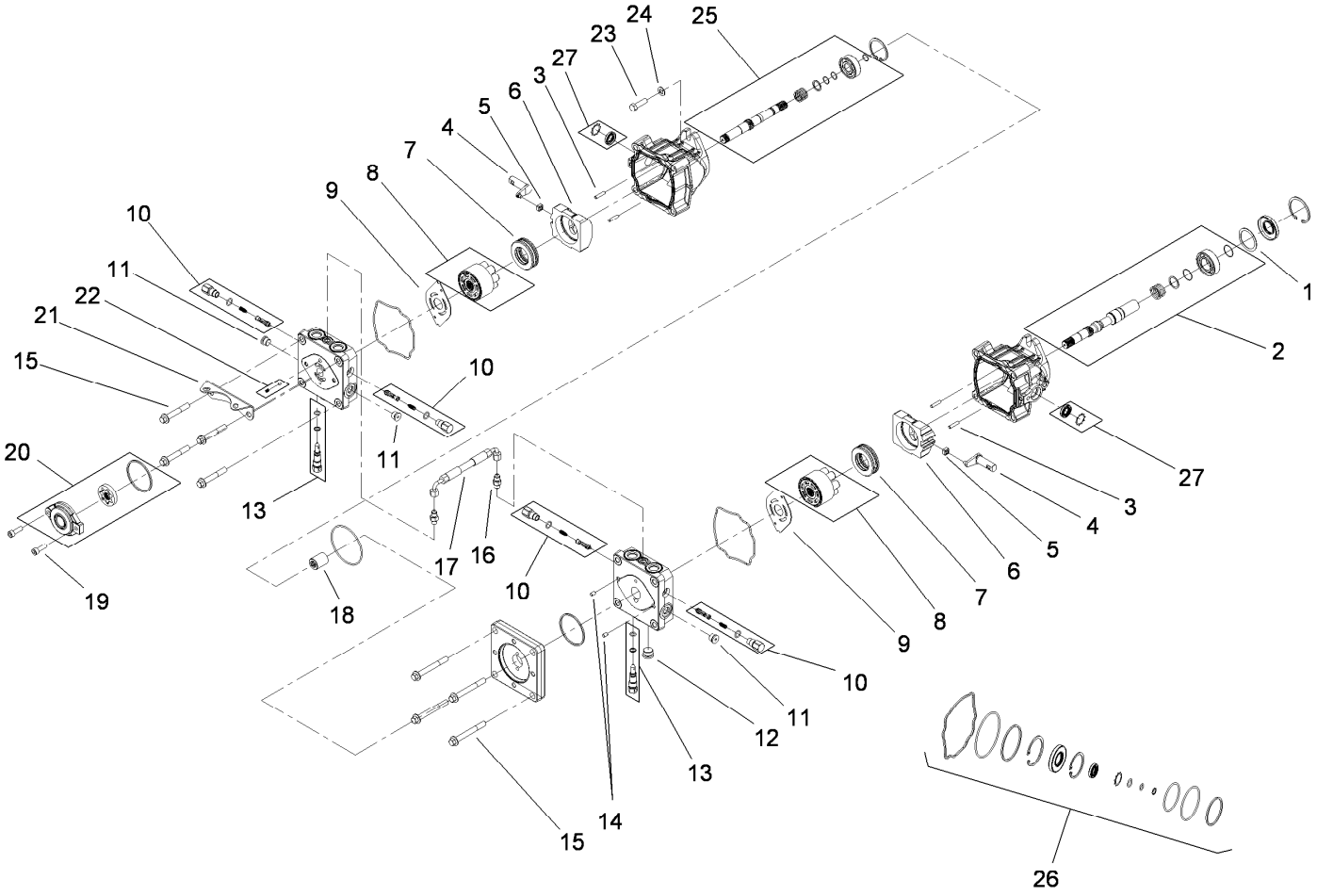

Tandem Pump Assembly No. 107-9885

Ref.	Part Number	Qty.	Description
1	112-4168	1	Spacer
2	112-4151	1	Input Pump Shaft Kit
3	106-8753	4	Pin-Headless, Straight
4	112-4152	2	Arm-Trunnion
5	94-1910	2	Guide-Slot
6	112-4153	2	Swashplate
7	112-4154	2	Bearing-Thrust
8	108-2112	2	Cylinder Block Kit
9	108-6801	2	Plate-Valve
10	112-4155	4	Shock Valve Kit
11	104-2189	3	Plug-Thread, Straight
12	112-4156	1	Plug-Steel
13	106-8759	2	Bypass Valve Kit
14	104-2170	2	Pin

Ref.	Part Number	Qty.	Description
15	112-4157	8	Bolt
16	117-7842	2	Fitting-Straight
17	117-7843	1	Hose ASM
18	112-4160	1	Coupling
19	112-4161	2	Bolt
20	112-4162	1	Charge Pump Kit
21	112-4163	1	Bracket-Support, Pump
22	112-4164	1	Charge Relief Kit
23	112-4165	2	Bolt-HSH
24	112-4166	2	Washer
25	112-4167	1	Second Pump Shaft Kit
26	112-4150	1	Overhaul Seal Kit
27	114-8155	1	Trunnion Seal Kit

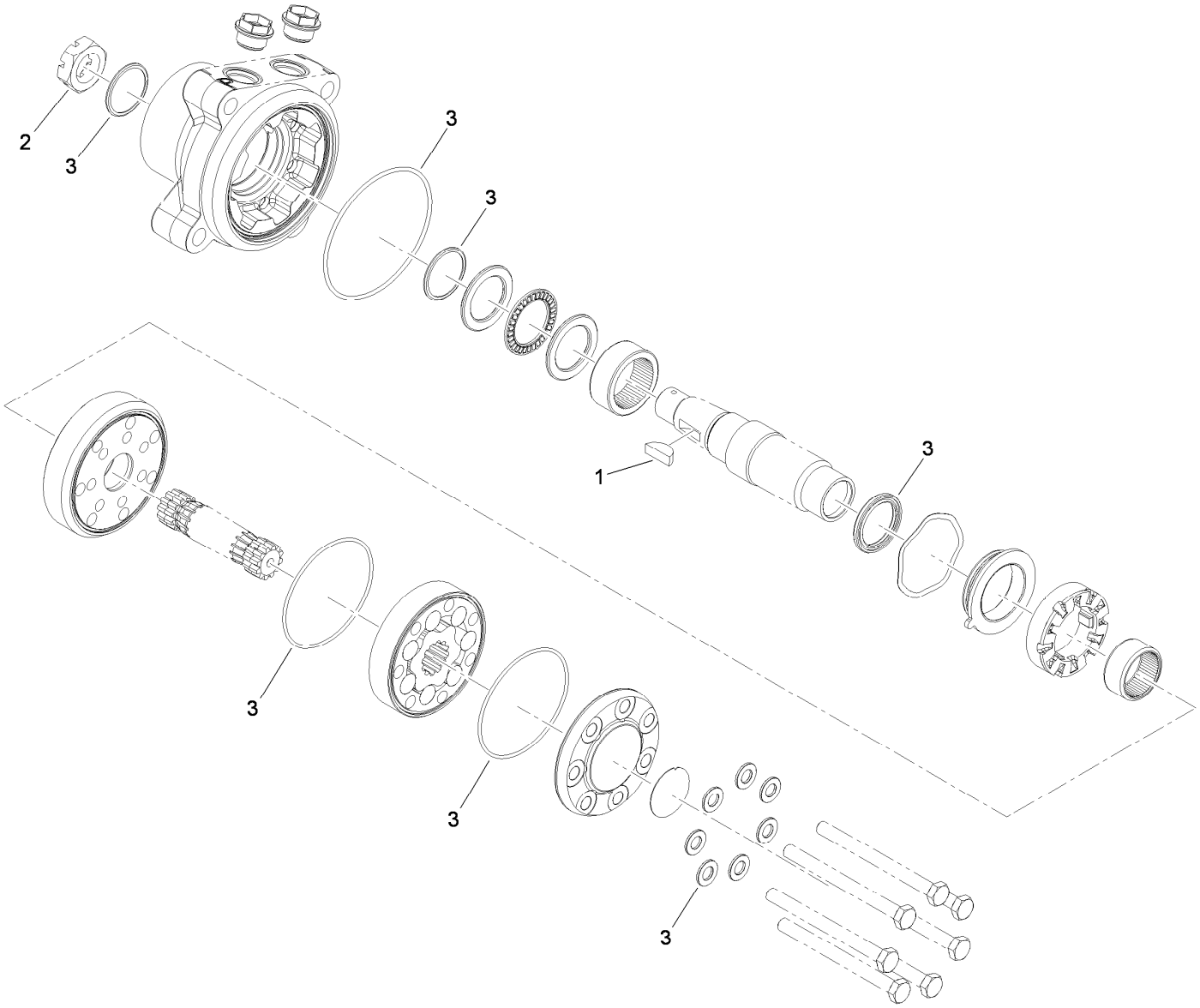

Hydraulic Motor Assembly No. 112-8358 (CW)

Ref.	*Part Number*	*Qty.*	*Description*
1	3257-42	1	Key-Woodruff
2	1-809036	1	Nut-HH
3	109-5966	1	Wheel Motor Seal Kit

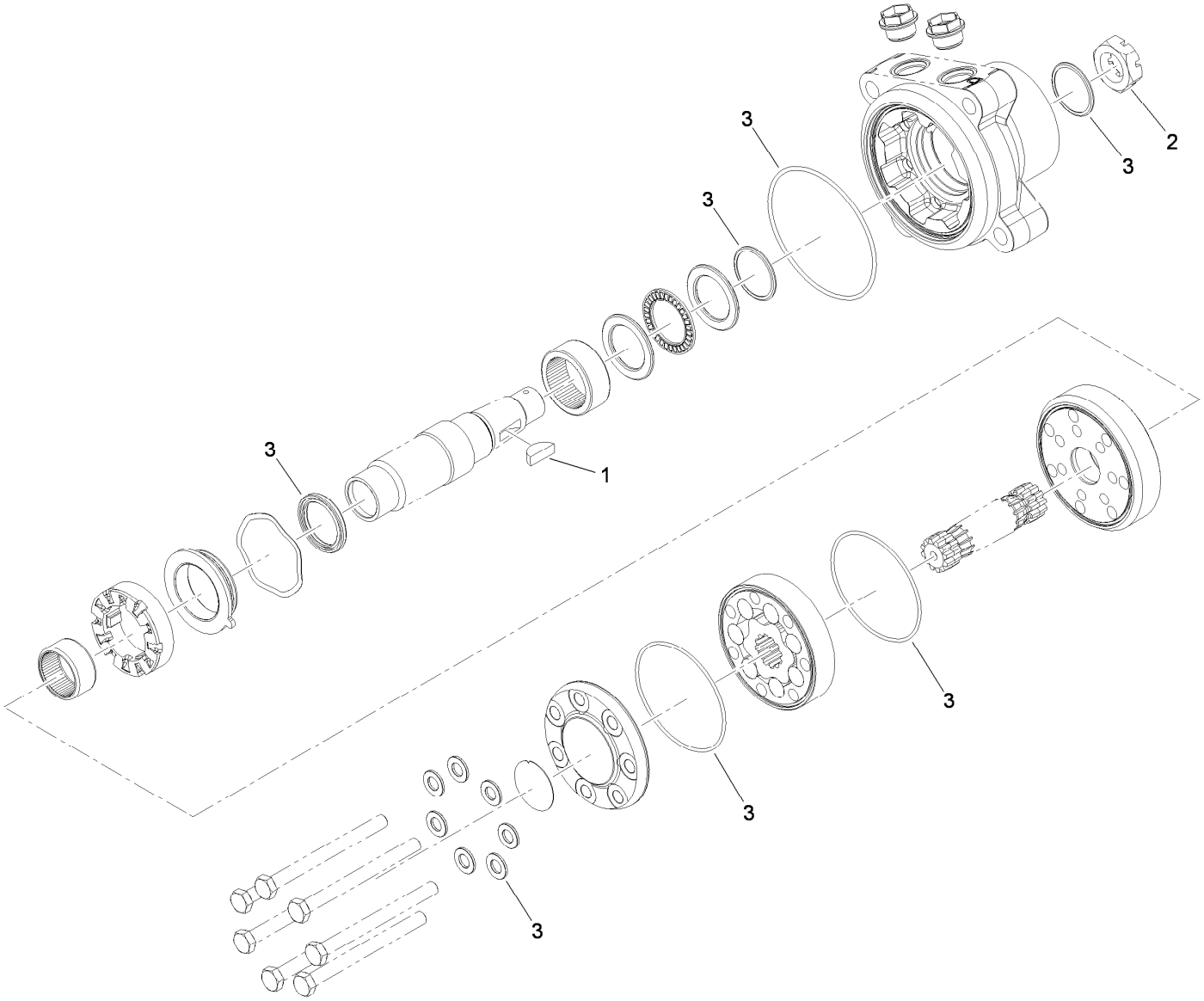

Hydraulic Motor Assembly No. 112-8357 (CCW)

Ref.	*Part Number*	*Qty.*	*Description*
1	3257-42	1	Key-Woodruff
2	1-809036	1	Nut-HH
3	109-5966	1	Wheel Motor Seal Kit

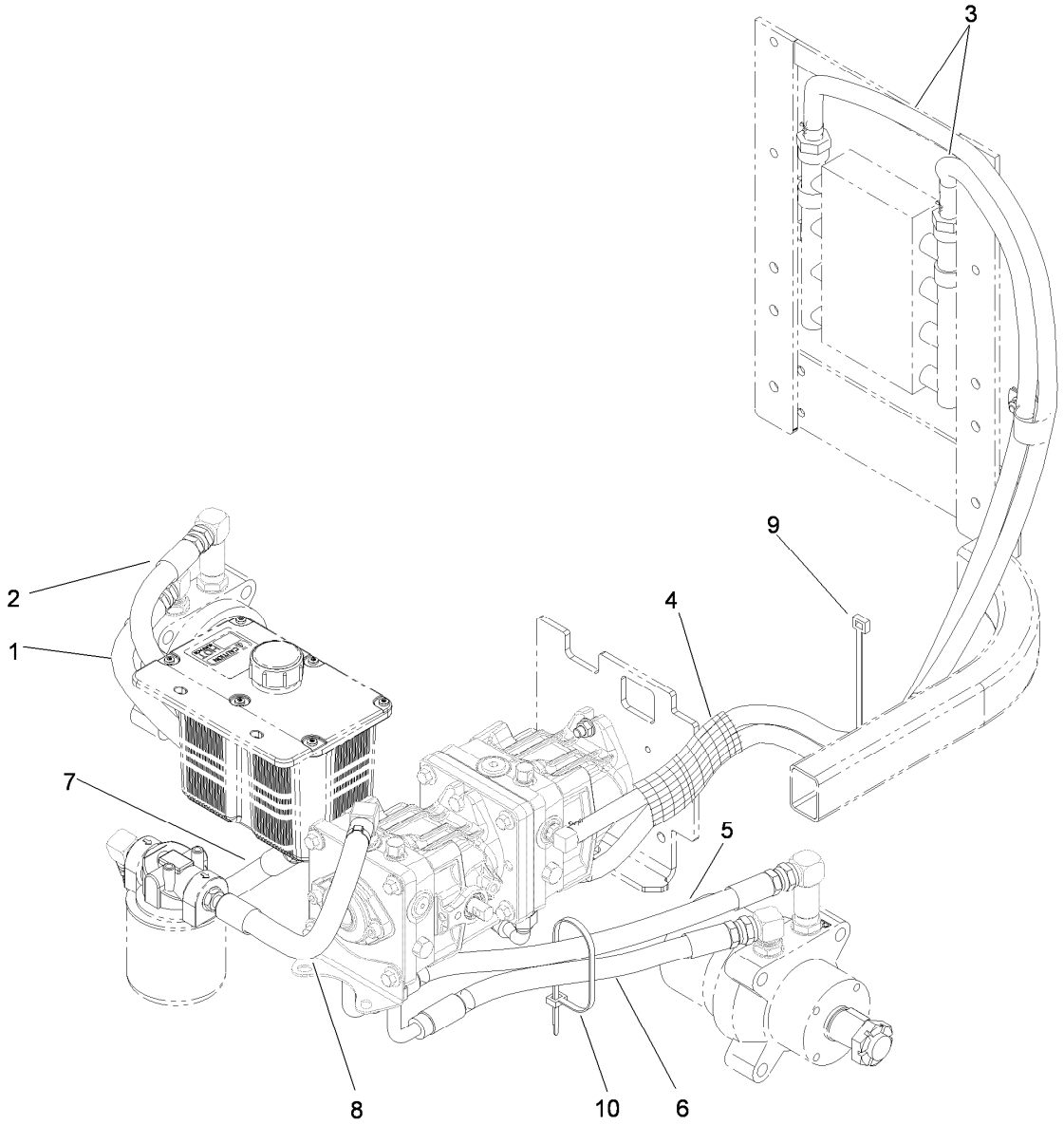

Hydraulic Hose System Assembly

Ref.	*Part Number*	*Qty.*	*Description*
1	107-3495	1	Hydraulic Hose ASM
2	107-3490	1	Hydraulic Hose ASM
3	114-8169	2	Hose-Hydraulic
4	114-8201	1	Sleeve-Fabric
5	108-5318	1	Hydraulic Hose ASM
6	107-3491	1	Hydraulic Hose ASM
7	110-3854	1	Hydraulic Hose ASM
8	108-5374	1	Hydraulic Hose ASM
9	1-303335	1	Tie-Plastic
10	1-809066	1	Tie-Plastic

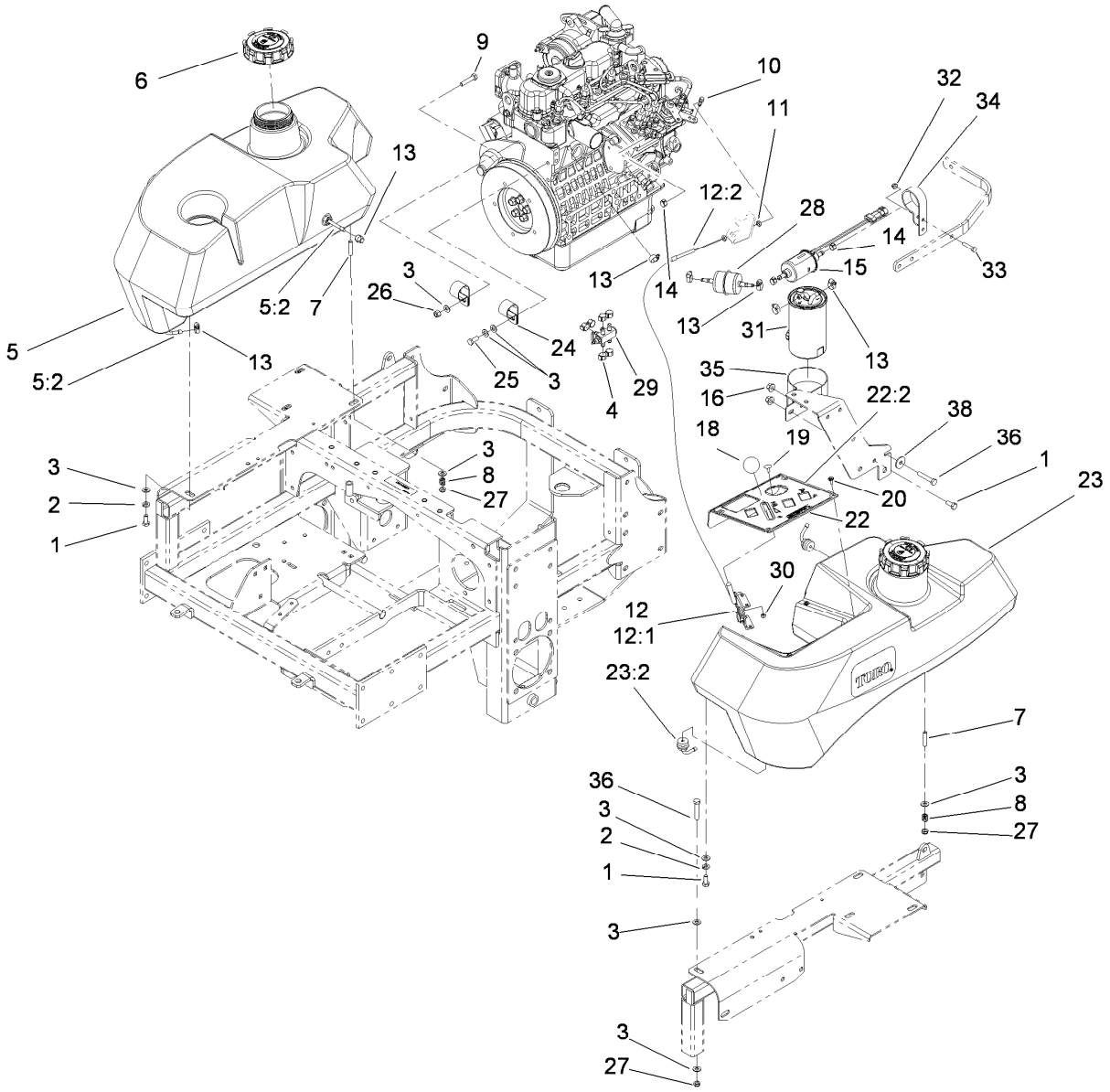

Fuel System and Throttle Control Assembly

Ref.	Part Number	Qty.	Description
1	322-3	3	Screw-HH
2	1-805005	2	Washer-Lock
3	3256-23	11	Washer-Flat
4	1-643293	6	Clamp-Hose, Fuel
5	114-8221	1	RH Fuel Tank ASM
5:2	103-2615	2	Fitting-Fuel, Bulkhead
6	114-5062	2	Cap-Biodiesel
7	1-633023	6	Stud
8	1-633349	6	Spring-Tank, Fuel
9	322-7	1	Screw-HH
10	108-5928	1	Swivel-Stop, Cable
11	3220-1	2	Nut-Jam
12	108-5927	1	Cable-Control, Throttle
12:1	112-2333	1	Lever-Cable, Throttle
12:2	108-6337	1	Cable-Throttle
13	2412-108	9	Clamp-Worm
14	1-643277	3	Clamp-Hose, Fuel
15	110-8806	1	Pump-Fuel
16	3296-58	2	Nut-Lock, NI
18	1-603175	1	Knob-Ball

Ref.	Part Number	Qty.	Description
19	1-807513	2	Bolt-CARR
20	109-2661	4	Screw-PPH
22	117-0913	1	Control Panel ASM
22:2	117-0912	1	Decal-Panel, Control
23	114-8222	1	LH Fuel Tank ASM
23:2	103-2615	2	Fitting-Fuel, Bulkhead
24	1-643312	2	Clip-Loom
25	33114-020	1	Screw-HH
26	3296-29	1	Nut-Lock, NI
27	3296-47	6	Nut-Lock, NI
28	112-7836	1	Filter-Inline
29	1-643234	1	Valve-Fuel, Dual Flow
30	3296-2	2	Nut-Lock, NI
31	112-9188	1	Element-Filter, Fuel/Water
32	104-7201	1	Nut-HF
33	321-8	1	Screw-HH
34	110-8817	1	Bracket-Pump, Fuel
35	110-8807	1	Bracket-Filter, Fuel
36	322-9	1	Screw-HH
38	3256-82	1	Washer-Flat

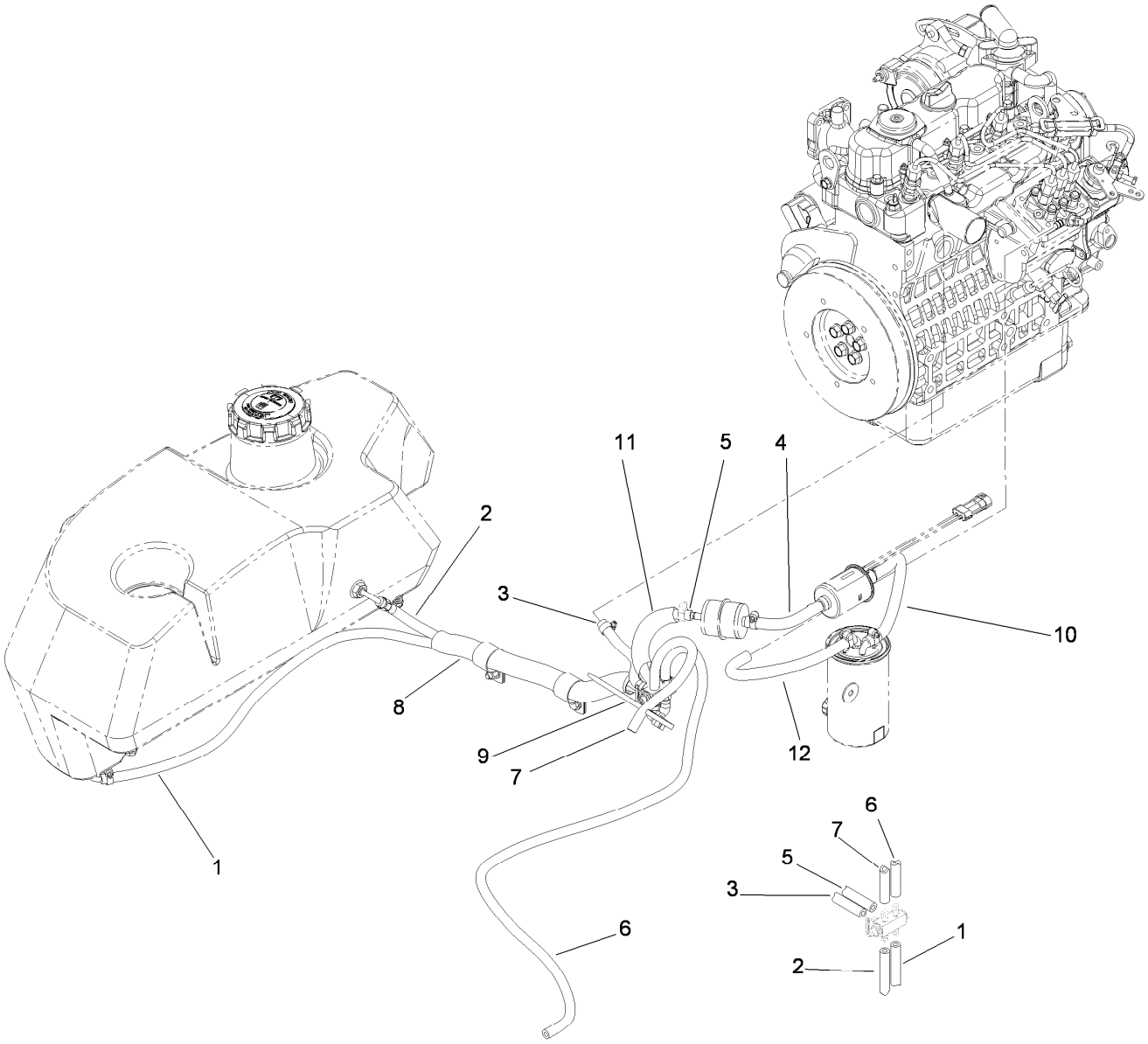

Fuel Line Assembly

Ref.	Part Number	Qty.	Description
1	108-5376	1	Hose-Fuel
2	109-0301	1	Hose-Fuel
3	109-0306	1	Hose-Fuel
4	108-3283	1	Hose-Fuel
5	109-0303	1	Hose-Fuel
6	109-0275	1	Hose-Fuel
7	109-0297	1	Hose-Fuel
8	108-5377	1	Sleeve-Fabric
9	1-303335	1	Tie-Plastic
10	110-4124	1	Hose-Fuel
11	114-8224	1	Conduit-Fuel Line
12	110-4105	1	Hose-Fuel

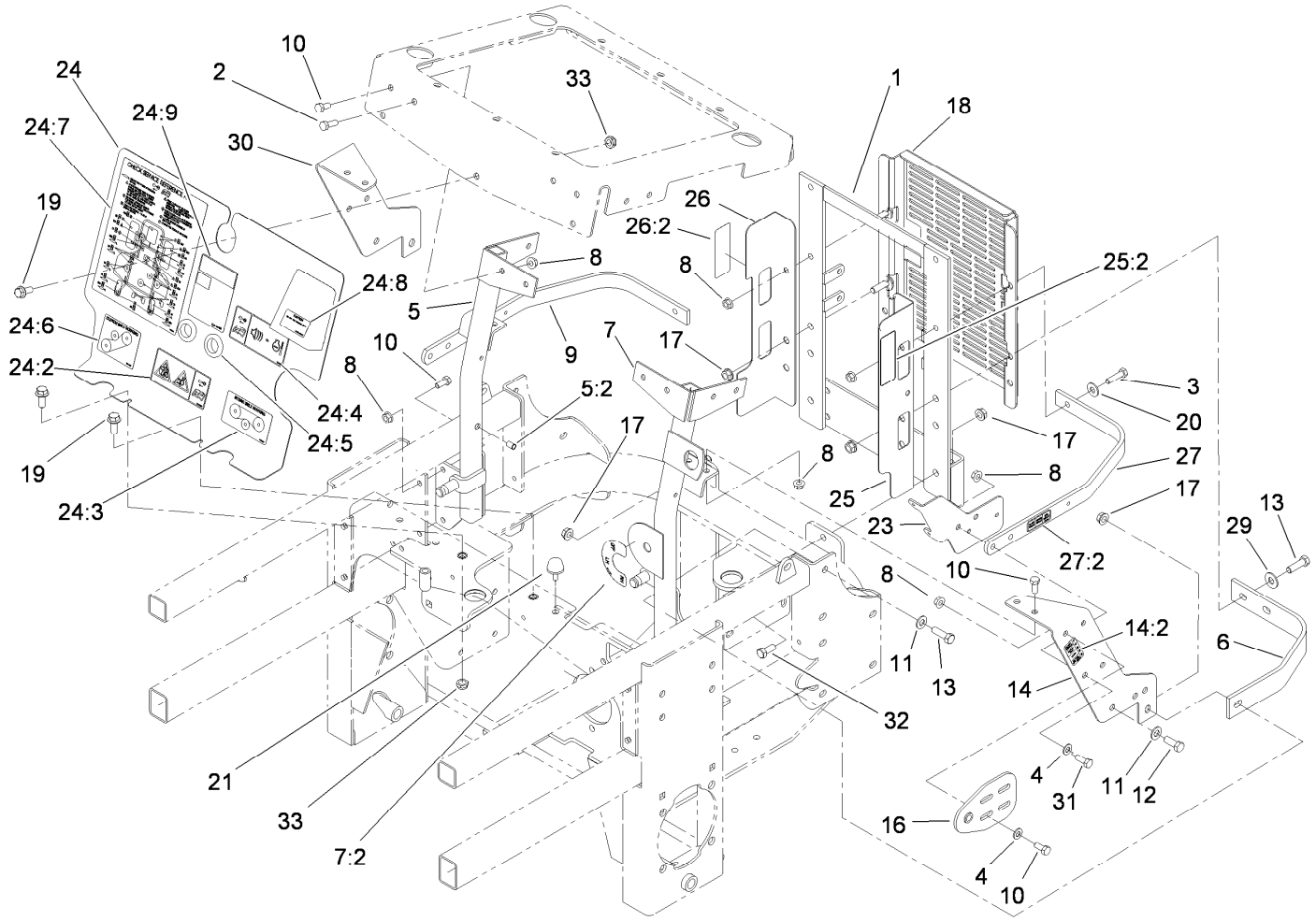

Engine Housing Assembly

Ref.	Part Number	Qty.	Description
1	107-9934-03	1	Support-Radiator, Rear
2	322-5	2	Screw-HH
3	322-6	2	Screw-HH
4	3256-23	8	Washer-Flat
5	114-1170	1	RH Radiator Brace ASM
5:2	32148-11	1	Insert-Threaded
6	103-7623-03	2	Strap-Guard
7	110-3870	1	LH Radiator Brace ASM
7:2	107-2114	1	Decal-Valve, Fuel
8	32128-20	22	Nut-HF
9	114-8223-03	1	Top-Rib
10	322-3	14	Screw-HH
11	3256-24	3	Washer-Flat
12	323-6	1	Screw-HH
13	323-7	4	Screw-HH
14	119-6650	1	LH Support Bracket ASM
14:2	119-0398	1	Decal-Fuse
16	108-5345-03	2	Plate-Pivot, Hood
17	3290-357	7	Nut-HHF, Whiz
18	112-8302-03	1	Shield-Cooler
19	3234-21	3	Screw-HHF
20	3256-3	2	Washer-Flat
21	109-2365	2	Rubber Bumper ASM (W/Stud)

Ref.	Part Number	Qty.	Description
23	119-0393-03	1	Bracket-Relay, Fuse
24	114-1829	1	Front Shield ASM
24:2	110-3853	1	Decal-Danger, Rotating Devices
24:3	108-5955	1	Decal-Routing, Hydro Belt
24:4	110-3852	1	Decal- Warning, Buzzer
24:5	100-3815	2	Grommet-Rubber
24:6	108-5957	1	Decal-Routing, Clutch Belt
24:7	114-1826	1	Decal-Check Service
24:8	110-0806	1	Decal-Caution
24:9	104-2449	1	Decal-Coolant
25	110-0879	1	Guard-Fan, LH (Ce)
25:2	107-7719	1	Decal-Danger
26	110-0888	1	Guard-Fan, RH (Ce)
26:2	107-7719	1	Decal-Danger
27	119-0399	1	Top Strap ASM
27:2	119-0397	1	Decal-Relay
29	3256-4	2	Washer-Flat
30	108-5339-03	1	Bracket-Support, RH
31	322-4	4	Screw-HH
32	323-5	2	Screw-HH
33	3296-56	3	Nut-Lock, NI

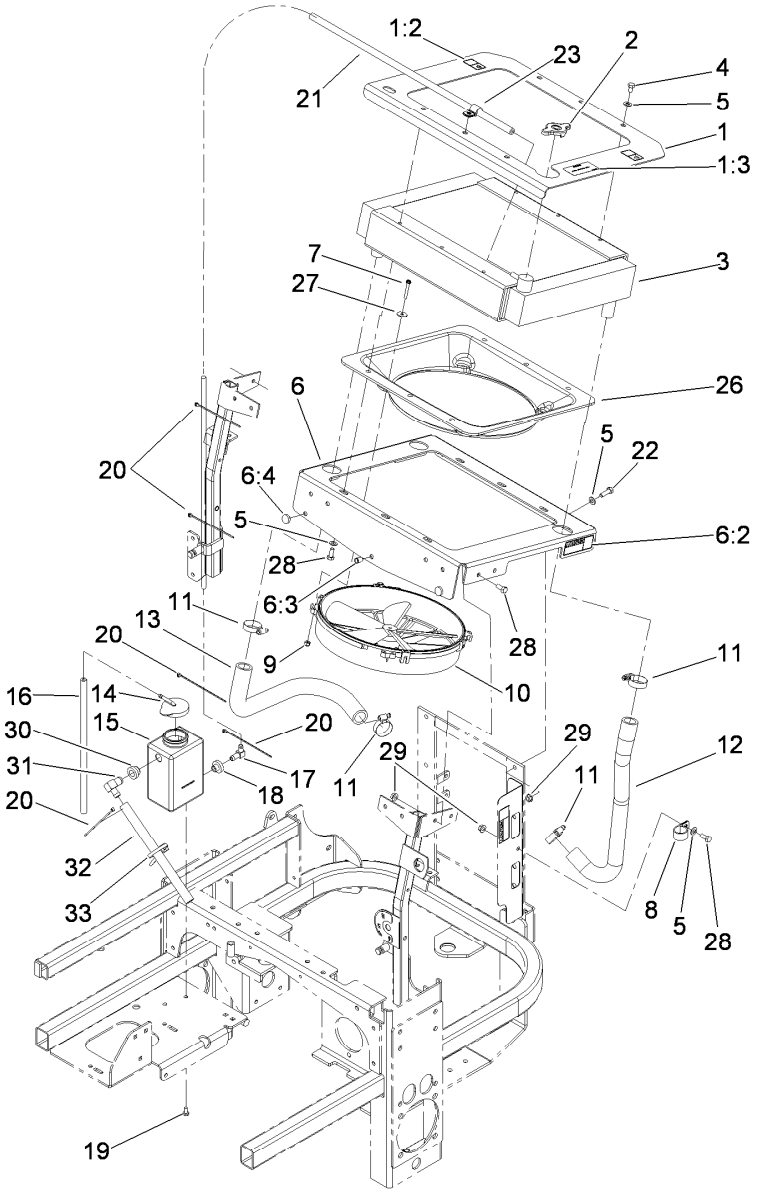

Cooling System Assembly

Ref.	Part Number	Qty.	Description
1	110-3845	1	Top Radiator Plate ASM
1:2	93-8069	2	Decal-Surface, Hot
1:3	110-3842	1	Decal-Antifreeze
2	1-643161	1	Cap-Radiator
3	107-9932	1	Radiator
4	322-1	6	Screw-HH
5	3256-23	16	Washer-Flat
6	110-0880	1	Bottom Radiator Plate ASM
6:2	107-7719	2	Decal-Danger
6:3	32148-6	1	Insert-Nut
6:4	1-513658	2	Bumper
7	108-5988	4	Screw
8	1-643312	1	Clip-Loom
9	1-804254	4	Nut-Lock, HH
10	1-633831	1	Fan
11	1-633989	4	Clamp-Hose
12	108-5372	1	Hose-Radiator, LH
13	108-5904	1	Hose-Outlet, Engine

Ref.	Part Number	Qty.	Description
14	1-643164	1	Cap-Tank, Overflow
15	117-0941	1	Tank-Overflow
16	1-603954	1	Hose-Line, Fuel
17	1-643259	1	Fitting-Elbow
18	1-513645	1	Bushing-Valve, Fuel
19	321-2	2	Screw-HH
20	1-303287	6	Tie-Cable
21	103-1428	1	Hose-Overflow
22	322-5	3	Screw-HH
23	1-603727	1	Clip-Loom
26	108-5971	1	Shroud-Cooling, Engine
27	3256-67	4	Washer-Flat
28	322-3	10	Screw-HH
29	32128-20	3	Nut-HF
30	104-0790	1	Bushing
31	117-0943	1	Fitting-Elbow
32	115-4969	1	Hose-Overflow
33	1-303335	1	Tie-Plastic

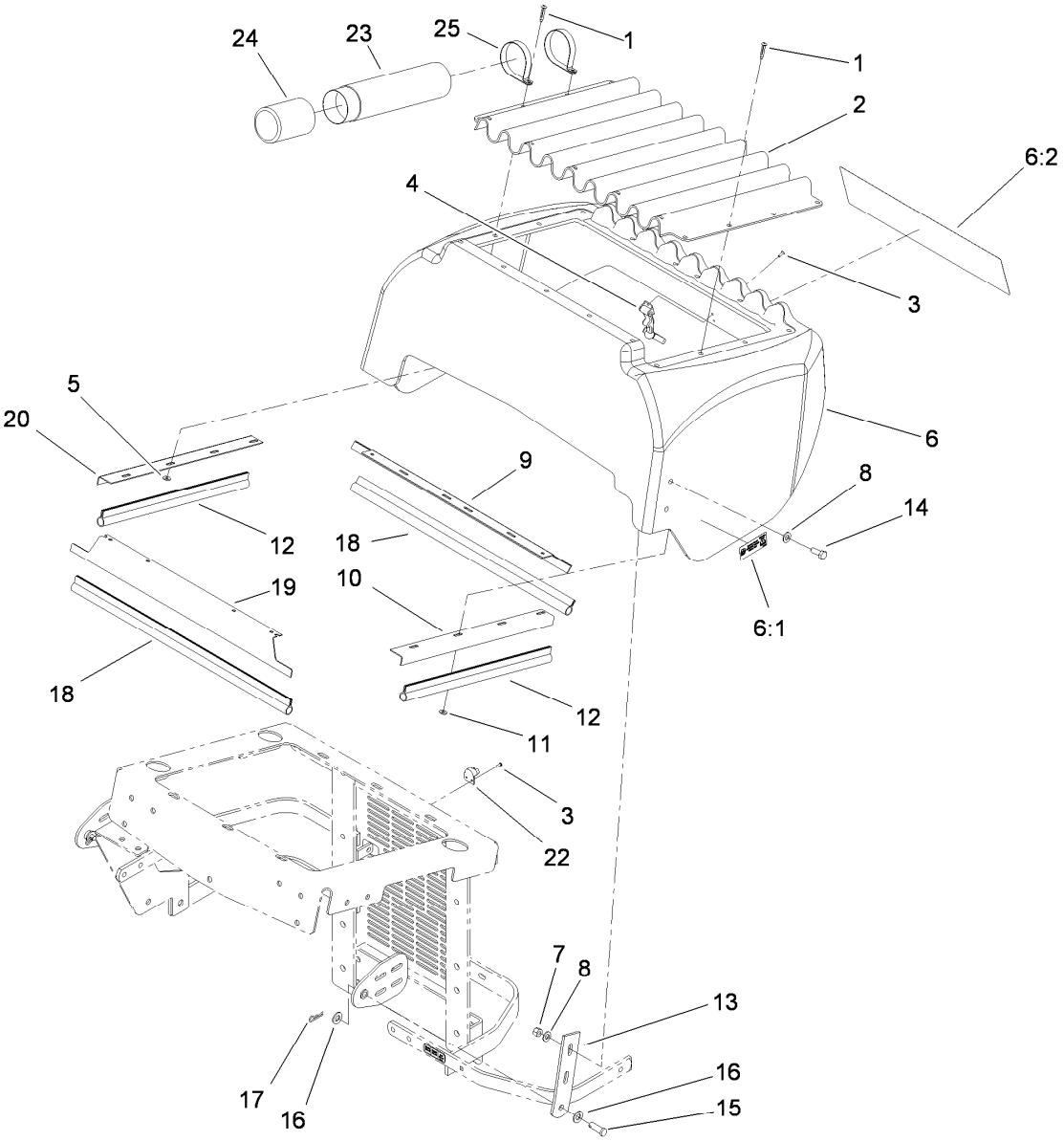

Hood Assembly

Ref.	Part Number	Qty.	Description
1	1-803072	17	Rivet
2	1-633864-03	1	Screen-Radiator
3	923786	4	Rivet
4	1-643188	1	Latch-Rubber
5	1-303435	4	Washer-Spring
6	114-8225	1	Hood ASM
6:1	114-9600	2	Decal-Low Sulfur
6:2	107-7674	1	Decal
7	3296-29	4	Nut-Lock, NI
8	3256-23	8	Washer-Flat
9	1-643108-03	1	Angle-Radiator, Bottom
10	1-643105-03	1	Angle-Radiator, LH
11	3256-14	12	Washer-Flat

Ref.	Part Number	Qty.	Description
12	1-643186	2	Seal-Trim
13	108-5337-03	2	Plate-Hinge, Hood
14	322-4	4	Screw-HH
15	1-808285	2	Pin-Clevis
16	3256-24	4	Washer-Flat
17	1-806003	2	Pin-Cotter, Hair
18	1-643187	2	Seal-Trim
19	1-643107-03	1	Angle-Radiator, Top
20	1-643106-03	1	Angle-Radiator, RH
22	1-643189	1	Keeper-Latch, Rubber
23	104-7050	1	Tube-Manual
24	104-7048	1	Cap-Housing
25	2412-120	2	R-Clamp

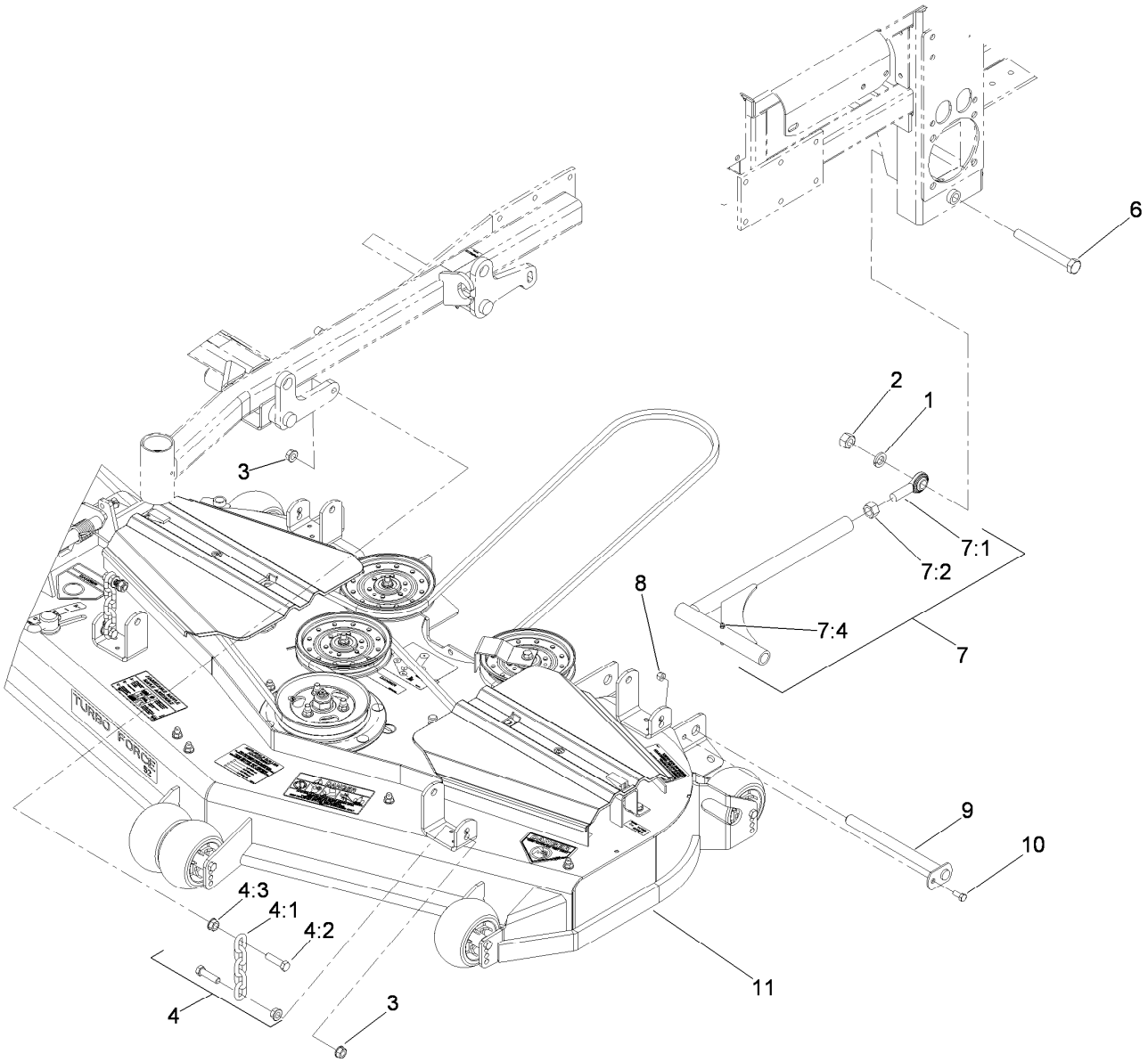

Deck Connection Assembly

Ref.	Part Number	Qty.	Description
1	3253-8	2	Washer-Lock
2	3217-11	2	Nut-Hex
3	32128-37	8	Nut-HF
4	103-9792	4	Deck Chain ASM
4:1	1-633447	1	Chain-Lift, Deck
4:2	103-1898	2	Screw-HH
4:3	32128-37	2	Nut-HF
6	327-28	2	Screw-HH

Ref.	Part Number	Qty.	Description
7	108-5969	2	Strut ASM
7:1	1-633029	1	Balljoint-Spherical
7:2	3219-6	1	Nut-Hex
7:4	109-1380	1	Fitting-Grease
8	3296-29	2	Nut-Lock, NI
9	1-632199-01	2	Pin-Strut
10	322-3	2	Screw-HH
11		1	Deck ASM ●

● Not serviced separately

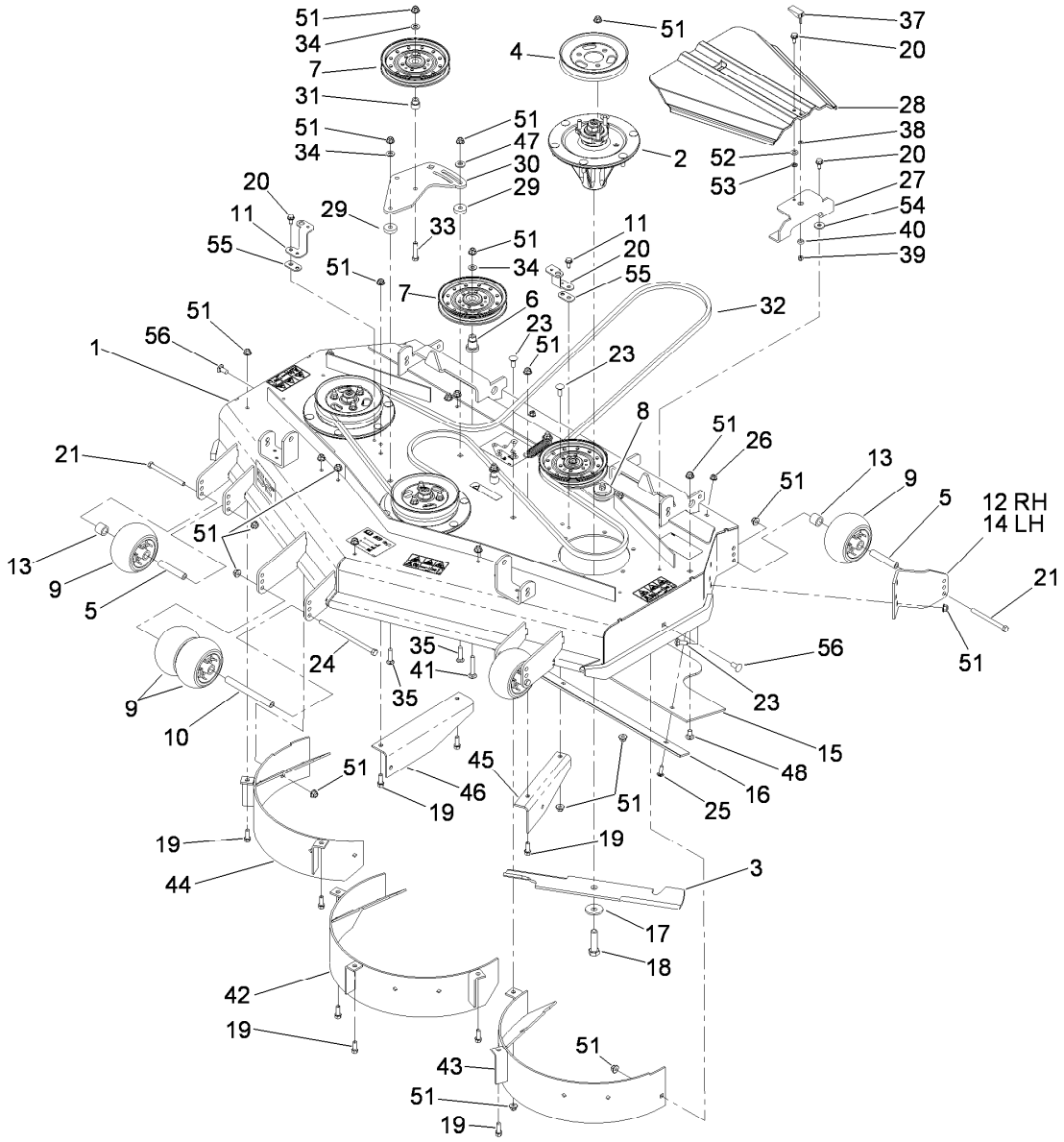

Deck Assembly

Ref.	Part Number	Qty.	Description
1	114-4491	1	Deck Decal ASM
2	117-6158	3	Spindle ASM
3	105-7781-03	3	Blade-18 Inch (Hi Flow)
4	105-7735	3	Pulley
5	98-7912	4	Tube-Spanner
6	106-3214	1	Mount-Pulley
7	1-633109	2	Idler-Flat
8	114-1812	1	Spring Idler ASM
9	1-603299	6	Roller-Scalp, Anti
10	98-5967	1	Spacer-Wheel
11	108-2177-01	2	Bracket-Cover, Tall
12	112-3893-01	1	Mount-Anti Scalp, RH
13	98-7913	4	Tube-Spacer
14	112-3895-01	1	Mount-Anti Scalp, LH
15	112-3869	1	Deflector-Rubber
16	112-3868-01	1	Skid-Skirt
17	103-0865	3	Washer-Blade Bolt, Heavy
18	51-4060	3	Screw-Blade
19	92-1624	9	Screw-HWH
20	32144-70	8	Screw-HWHTF
21	323-23	4	Screw-HH

Ref.	Part Number	Qty.	Description
23	3231-2	8	Screw-CARR
24	108-5388	1	Screw-HH
25	3230-22	4	Screw-CARR
26	104-8300	4	Nut-Flange, NI
27	114-1809-01	2	Bracket-Belt Cover
28	107-8536	2	Cover-Belt
29	105-7788	2	Spacer
30	107-8516-01	1	Plate-Idler
31	1-603496	1	Bushing-Idler
32	108-5951	1	Belt-V
33	323-9	1	Screw-HH
34	3256-24	3	Washer-Flat
35	3231-4	2	Screw-CARR
37	106-6777	2	Handle-Latch, Swell
38	99-3058	2	Washer
39	1-804254	2	Nut-Lock, HH
40	106-6778	2	Bushing-Latch, Swell
41	3231-7	1	Screw-CARR
42	112-3871-01	1	Center Baffle ASM
43	112-3872-01	1	LH Baffle ASM
44	112-3873-01	1	RH Baffle ASM

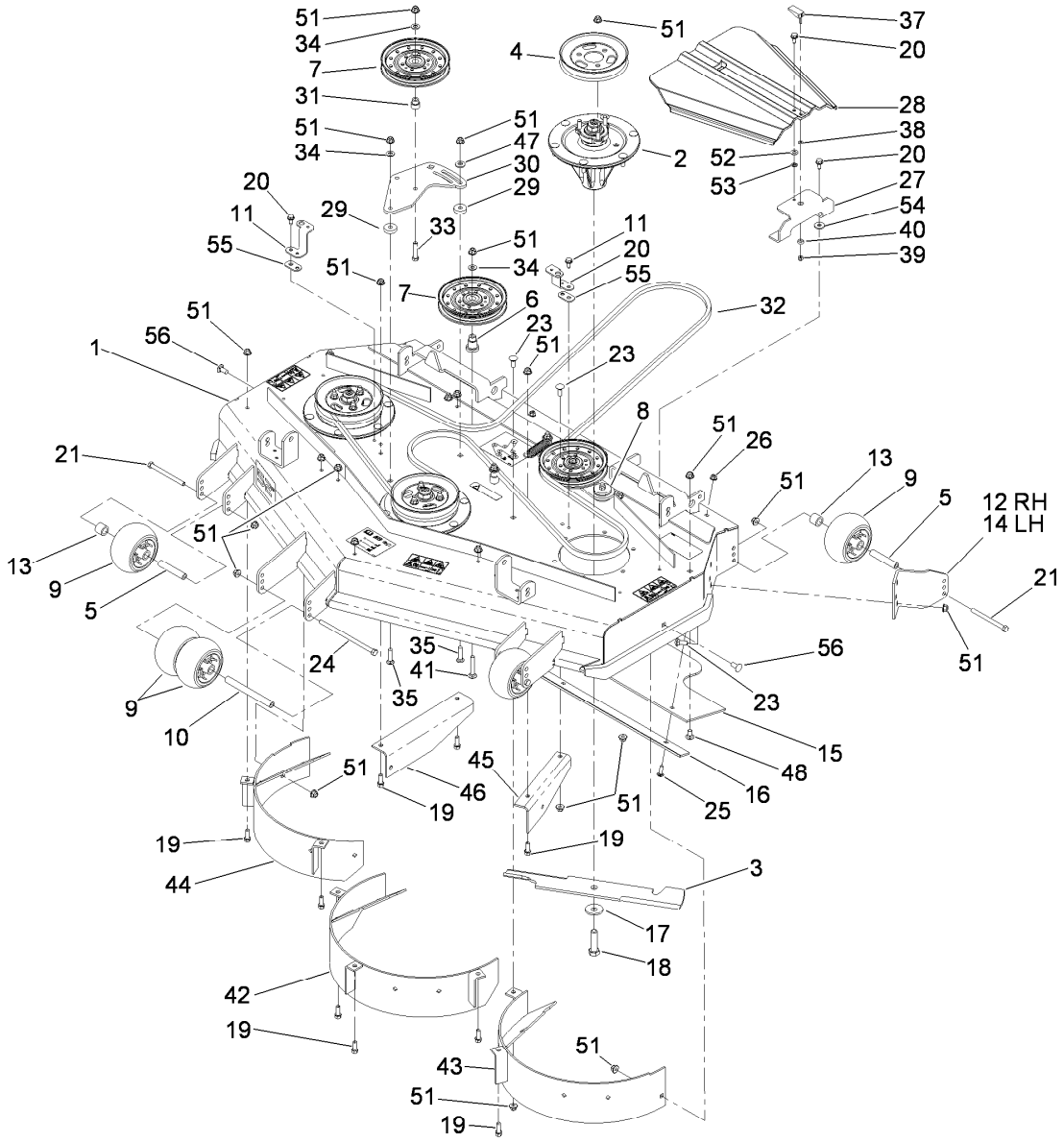

Deck Assembly (continued)

Ref.	Part Number	Qty.	Description
45	112-3862-01	1	Baffle-Trailing
46	112-3863-01	1	Baffle-Trailing
47	98-5975	1	Washer-Belleville
48	3231-1	4	Screw-CARR
51	104-8301	59	Nut-Flange, NI

Ref.	Part Number	Qty.	Description
52	73-0041	2	Washer-Thrust
53	117-2749	2	Nut-Push
54	5-0838	4	Washer
55	119-4222-01	2	Spacer-Belt Cover
56	3231-27	2	Screw-CARR

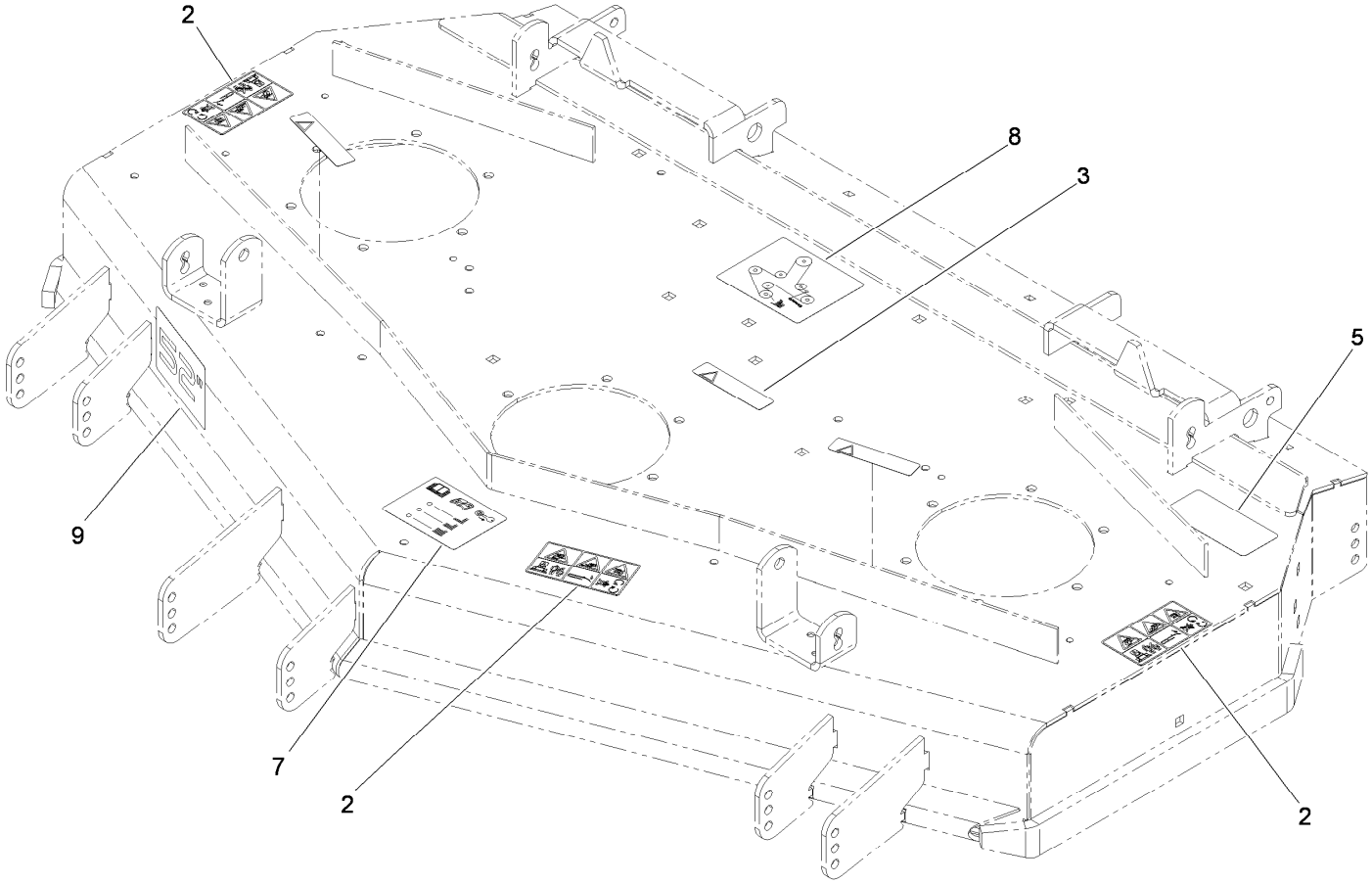

Deck Decal Assembly No. 114-4491

Ref.	*Part Number*	*Qty.*	*Description*
2	93-7010	3	Decal-Danger
3	98-1977	3	Decal-Warning
5	93-7818	1	Decal-Torque, Blade Bolt
7	112-3858	1	Decal-Anti Scalp
8	108-5981	1	Decal-Routing, Belt
9	114-1827	1	Decal

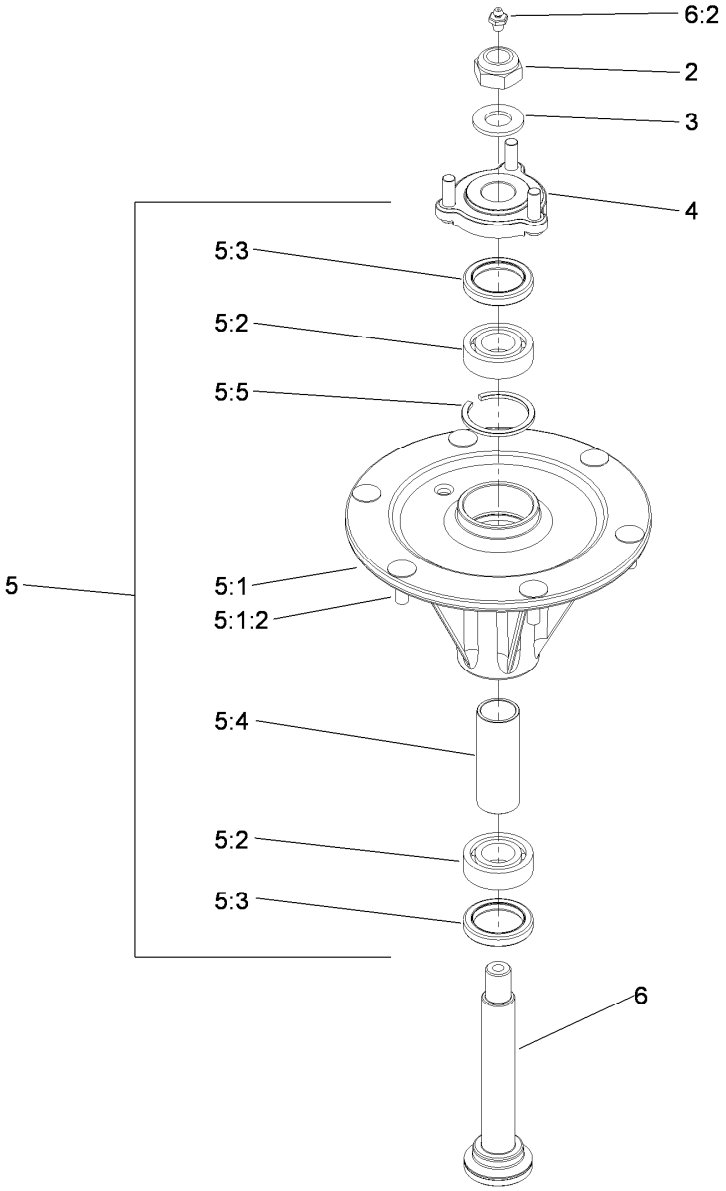

Spindle Assembly No. 117-6158

Ref.	Part Number	Qty.	Description
2	3296-67	1	Nut-Lock, NI
3	92-5836	1	Washer
4	117-6172	1	Spindle Hub ASM
5		1	Spindle Housing And Ball Bearing ASM ●
5:1		1	Spindle Housing And Studs ASM ●
5:1:2	114-8195	6	Bolt-Ribbed Neck
5:2	76-7500	2	Bearing-Ball
5:3	253-133	2	Seal-Oil
5:4	117-6184	1	Spacer
5:5	114-8161	1	Ring-Snap
6	119-1851	1	Spindle Shaft And Zerk ASM
6:2	302-2	1	Fitting-Grease

● Not serviced separately

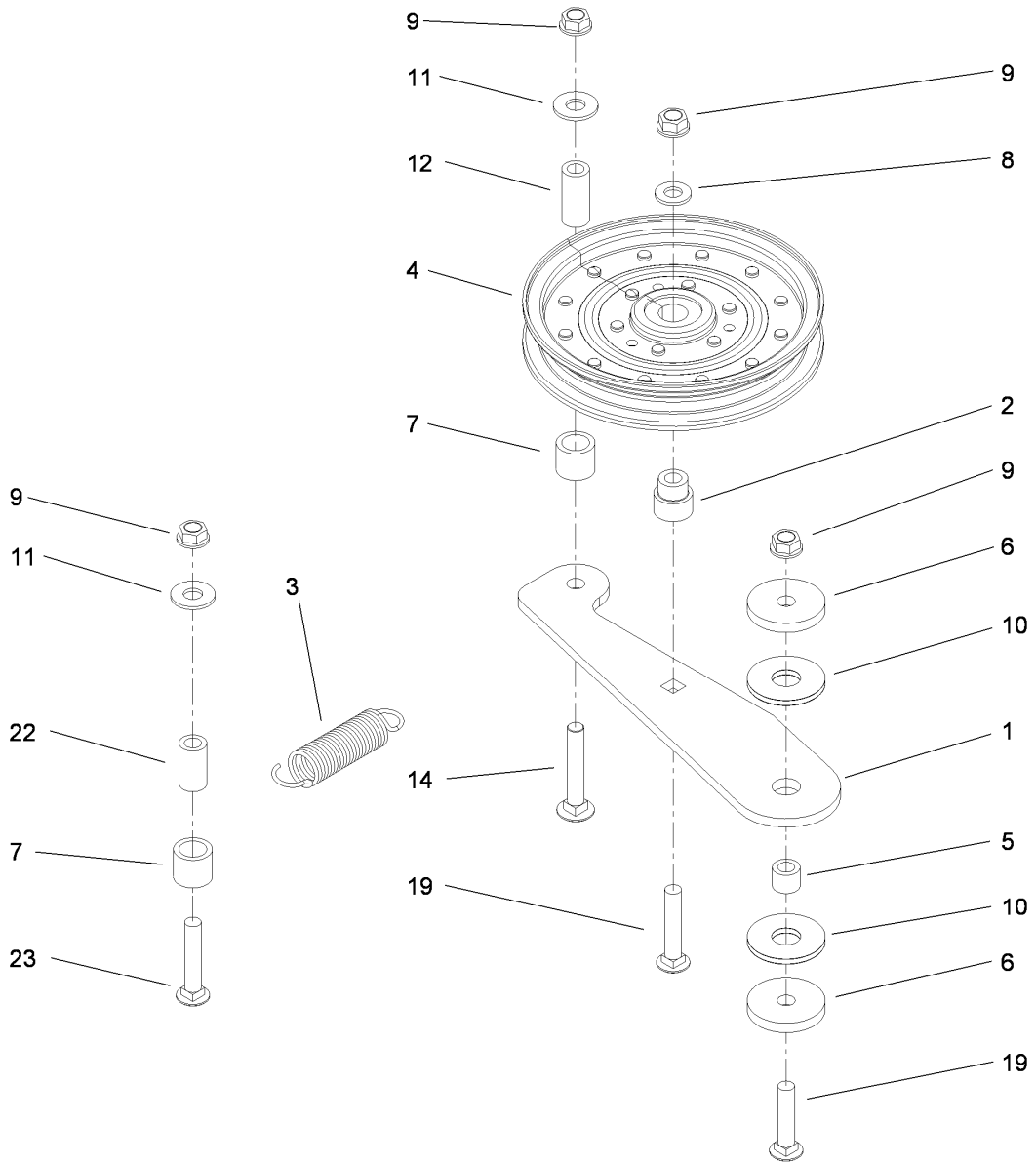

Spring Idler Assembly No. 114-1812

Ref.	Part Number	Qty.	Description
1	114-1815	1	Arm-Idler
2	1-603496	1	Bushing-Idler
3	108-4056	1	Spring-Extension
4	1-633109	1	Idler-Flat
5	1-413088	1	Bushing-Lever, Lift
6	110-9981	2	Washer-Plain
7	108-4063	2	Spacer-Rubber
8	3256-24	1	Washer-Flat

Ref.	Part Number	Qty.	Description
9	104-8301	4	Nut-Flange, NI
10	114-0463	2	Washer-Friction, Composite
11	3256-4	2	Washer-Flat
12	1-603401	1	Spacer-Fender
14	3231-6	1	Screw-CARR
19	3231-5	2	Screw-CARR
22	104-0151	1	Spacer
23	3231-40	1	Bolt-CARR

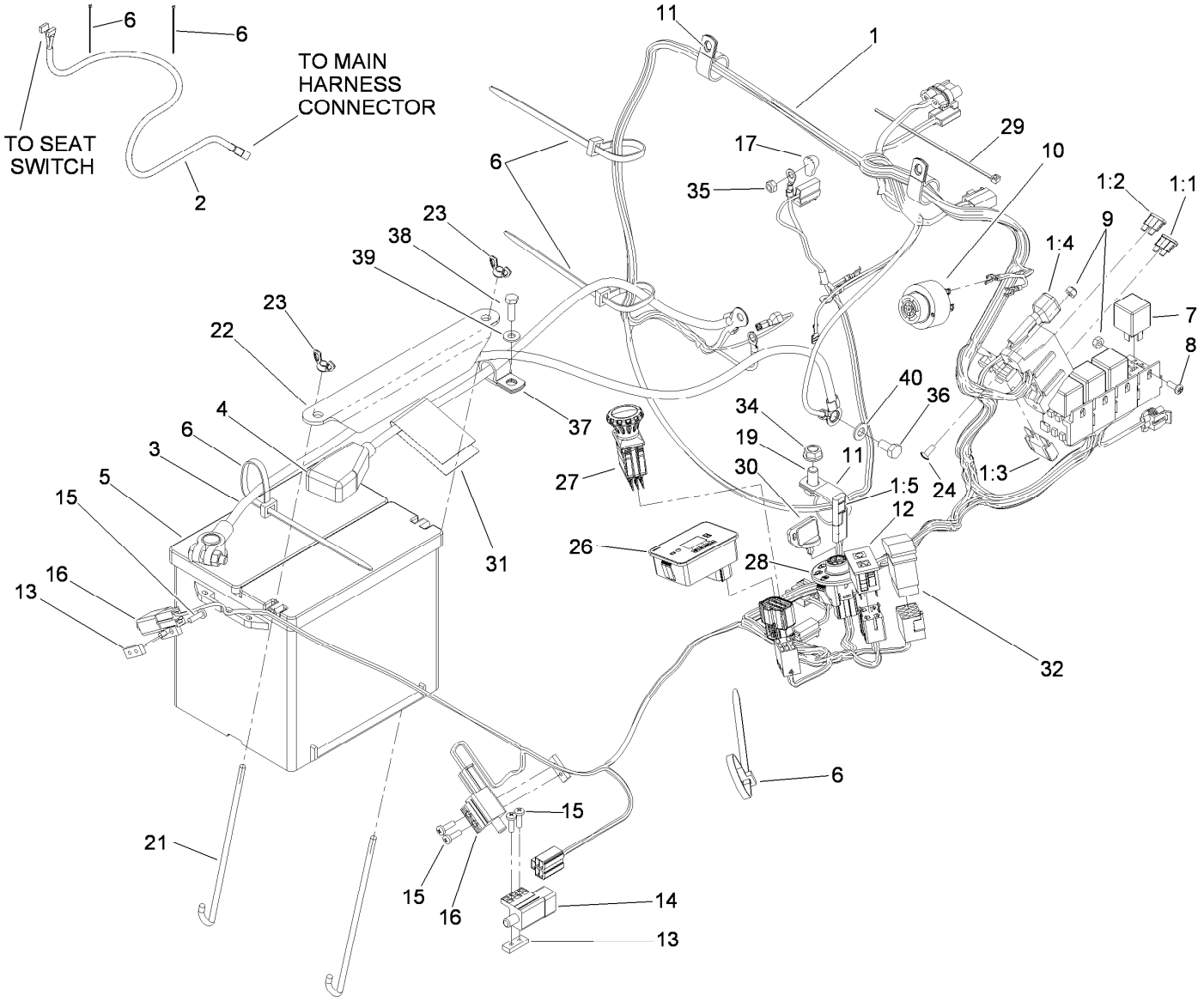

Electrical Assembly

Ref.	Part Number	Qty.	Description
1	119-0351	1	Harness-Wire
1:1	218-578	1	Fuse-Blade, 10 Amp
1:2	109103	1	Fuse-Blade, 30 Amp
1:3	94-8002	1	Fuse-Blade, 50 Amp
1:4	100-4918	1	Diode
1:5	116-0053	1	Cap-Plug
2	103-1227	1	Harness-Wiring, Seat
3	110-0303	1	Cable-Battery, Negative
4	110-0304	1	Cable-Battery, Positive
5	106-5187	1	Battery
6	1-303335	7	Tie-Plastic
7	1-643275	4	Relay
8	1-803071	2	Screw
9	3296-2	4	Nut-Lock, NI
10	103-0205	1	Alarm-Tone, Dual
11	1-643312	3	Clip-Loom
12	100-8071	1	Lamp-Warning
13	1-633181	3	Plate-Tapped
14	1-633111	1	Switch
15	3290-500	6	Screw-PPH
16	1-513051	2	Switch-Open, Normally

Ref.	Part Number	Qty.	Description
17	1-643178	1	Cap-Insulator, Red
19	323-4	1	Screw-HH
21	103-1312	2	Bolt-Holddown
22	103-1311-03	1	Holddown-Battery
23	1-543792	2	Wingnut
24	1-803075	2	Screw-Head, Truss
26	112-8650	1	Hour Meter ASM
27	116-0124	1	Switch-PTO, 10A
28	117-2221	1	Switch-Ignition
29	1-303287	1	Tie-Cable
30	63-8360	2	Key-Ignition
31	107-9309	1	Decal-Instructions, Charging
32	110-0811	1	Switch-Rocker
34	3290-357	1	Nut-HHF, Whiz
35	33023-00	1	Nut-Lock
36	33114-016	1	Screw-HH
37	1-633396	2	Clip-Loom
38	321-5	2	Screw-HH
39	3256-22	2	Washer-Flat
40	3256-23	1	Washer-Flat

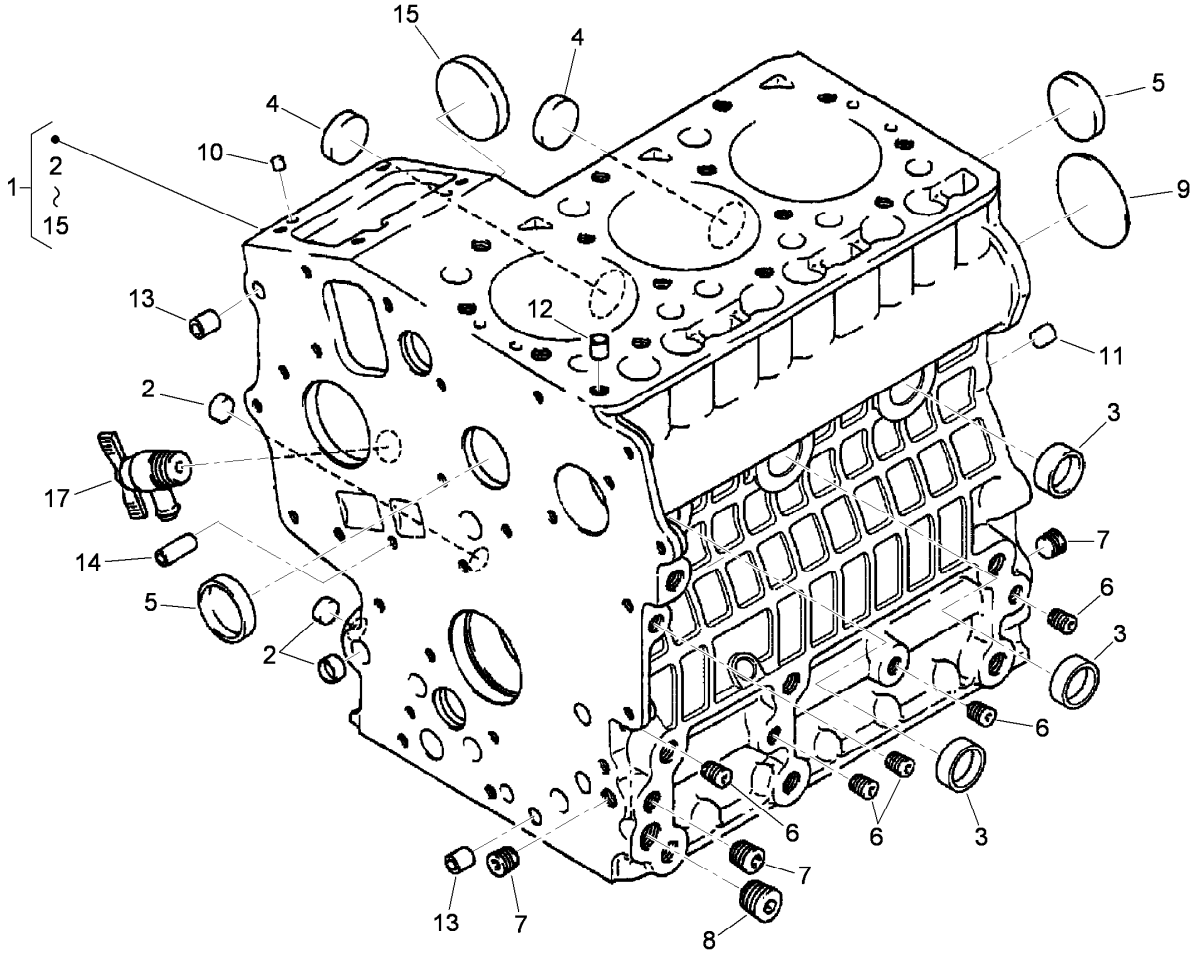

Crankcase Assembly

Ref.	Part Number	Qty.	Description
1	117-0301	1	Crankcase ASM
2	100-2019	3	Cap-Sealing
3	100-2020	3	Cap-Sealing
4	110-3702	2	Cap-Sealing
5	98-9398	2	Cap-Sealing
6	98-9687	5	Plug
7	98-7487	3	Plug
8	98-7488	1	Plug
9	100-1851	1	Plug-Expansion
10	98-9375	2	Pin-Straight
11	98-9377	2	Pin-Straight
12	98-7506	1	Pin-Pipe
13	98-9387	2	Pin-Pipe
14	100-2051	2	Pin-Pipe
15	100-1991	1	Cover-Fuel, Camshaft
17	98-9436	1	Drain Cock ASM

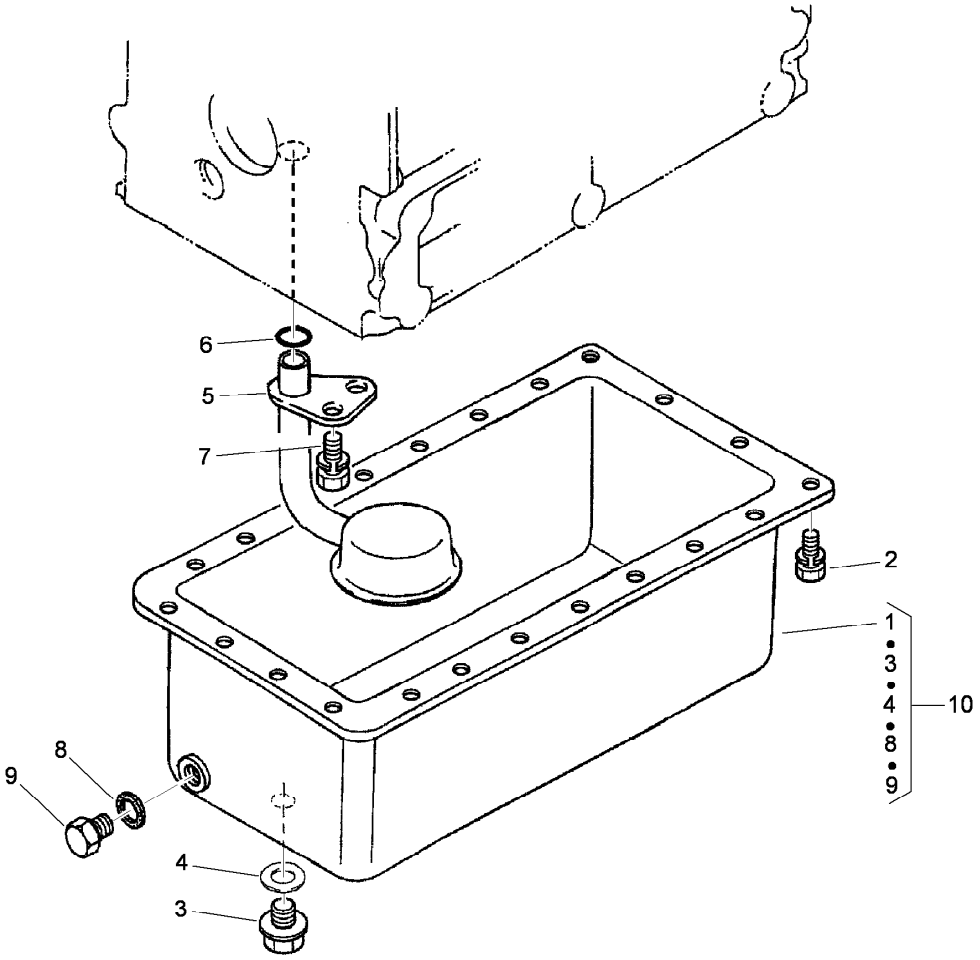

Oil Pan Assembly

Ref.	*Part Number*	*Qty.*	*Description*
1	112-2523	1	Pan-Oil
2	117-0302	22	Bolt
3	98-9686	1	Plug-Drain
4	110-9715	1	Gasket-Pan, Oil
5	100-2001	1	Strainer-Pickup, Oil
6	105-3776	1	O-Ring
7	100-9195	1	Bolt
8	98-7524	1	Gasket
9	114-8151	1	Plug-Drain
10	112-8327	1	Oil Pan Kit

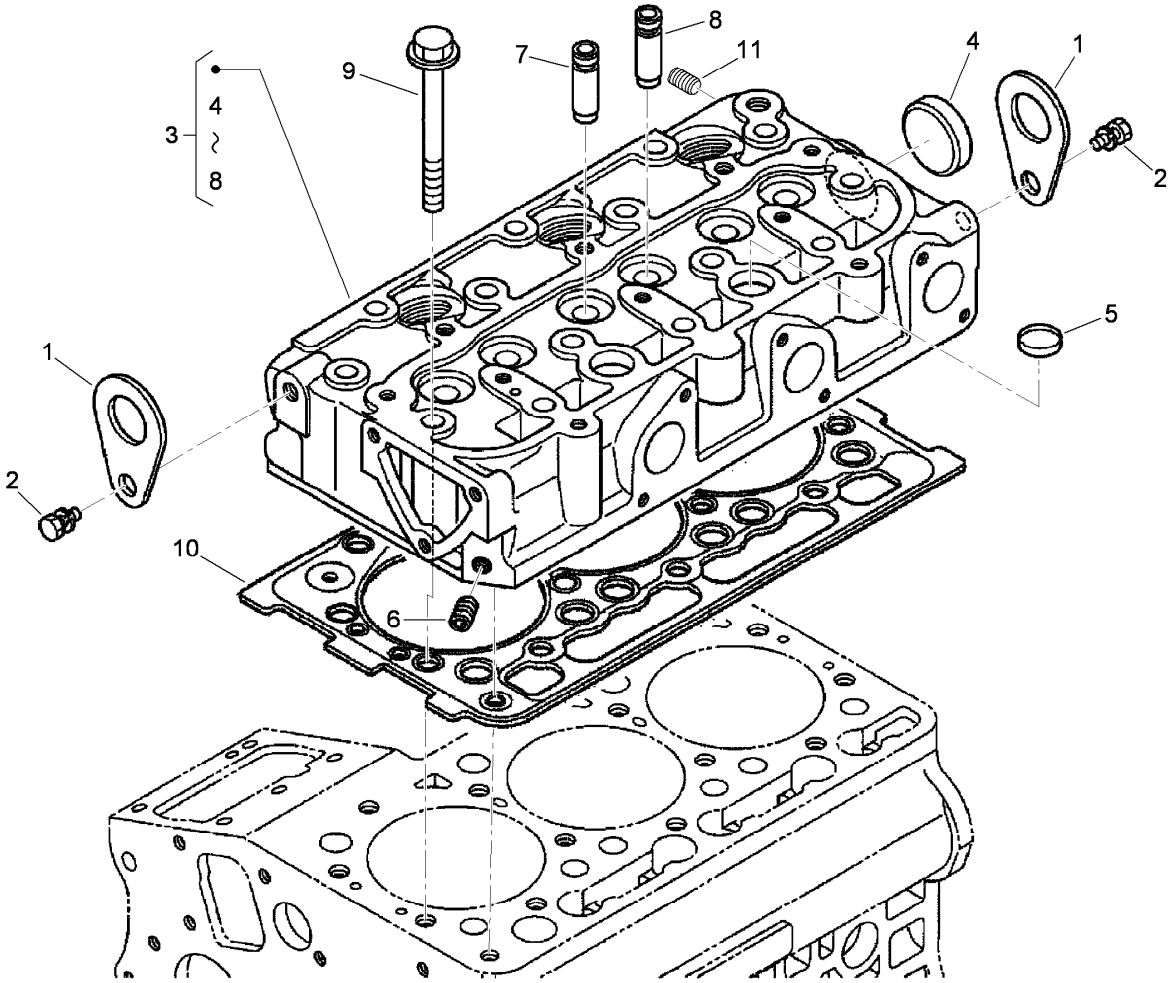

Cylinder Head Assembly

Ref.	*Part Number*	*Qty.*	*Description*
1	98-7531	2	Hook-Engine
2	98-7526	2	Bolt
3	112-8329	1	Head-Cylinder
4	105-3705	1	Cap-Sealing
5	98-9389	2	Cap-Sealing
6	98-9687	1	Plug
7	100-1882	3	Guide-Valve, Inlet
8	100-1883	3	Guide-Valve, Exhaust
9	100-1820	14	Bolt-Head, Cylinder
10	112-2520	1	Gasket-Head, Cylinder
11	98-9444	1	Plug

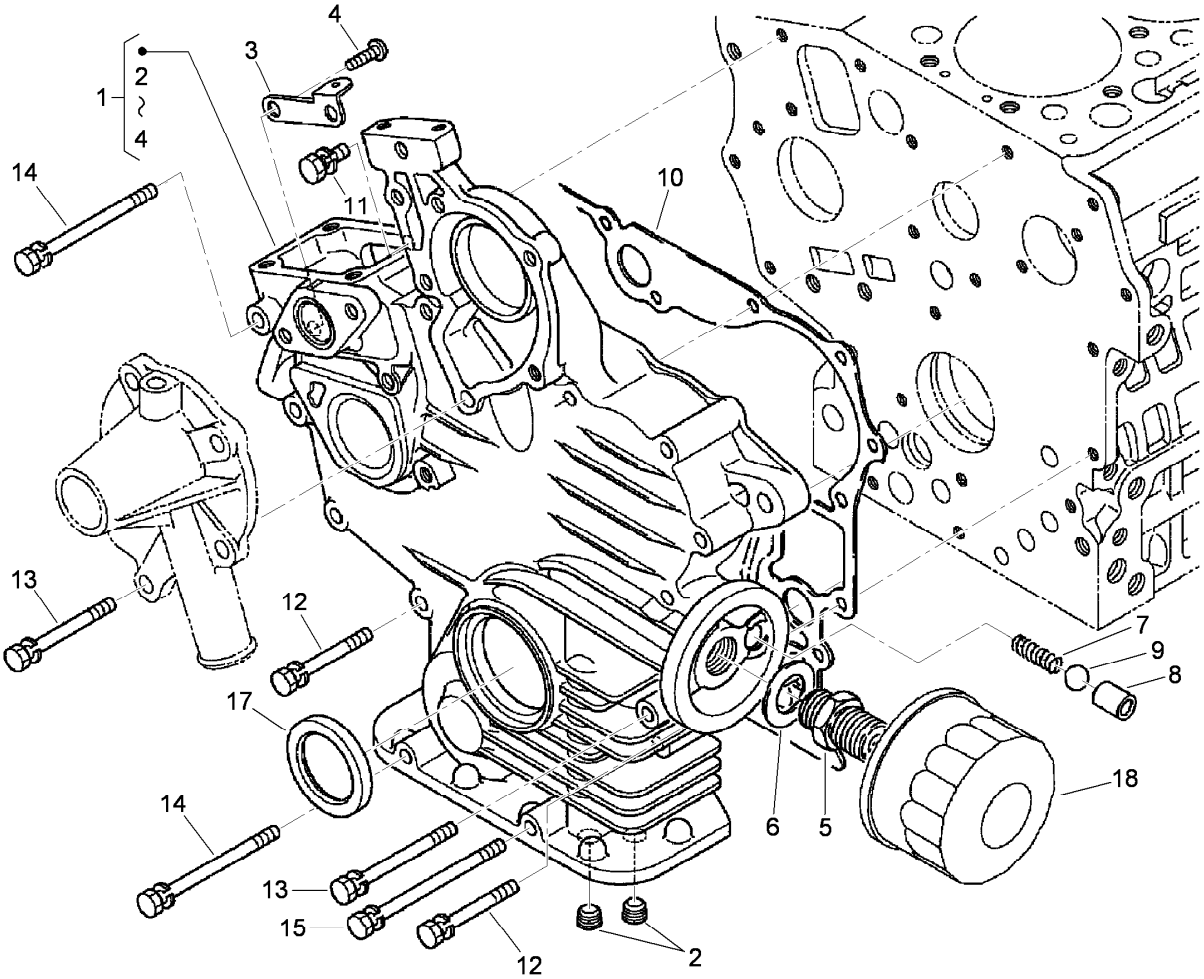

Gear Case and Oil Filter Cartridge Assembly

Ref.	*Part Number*	*Qty.*	*Description*
1	112-8331	1	Case-Gear
2	98-7488	2	Plug
3	110-3708	1	Stay-Spring, Start
4	100-2040	2	Screw
5	98-9388	1	Joint-Pipe
6	100-1926	1	Washer-Plain
7	100-2004	1	Spring
8	100-1894	1	Seat-Valve
9	100-1792	1	Ball
10	117-0327	1	Gasket-Case, Gear
11	98-7605	1	Bolt
12	105-3797	9	Bolt
13	100-1922	2	Bolt
14	98-9357	2	Bolt
15	110-3710	1	Bolt
17	100-1971	1	Seal-Oil
18	100-1892	1	Cartridge-Filter, Oil

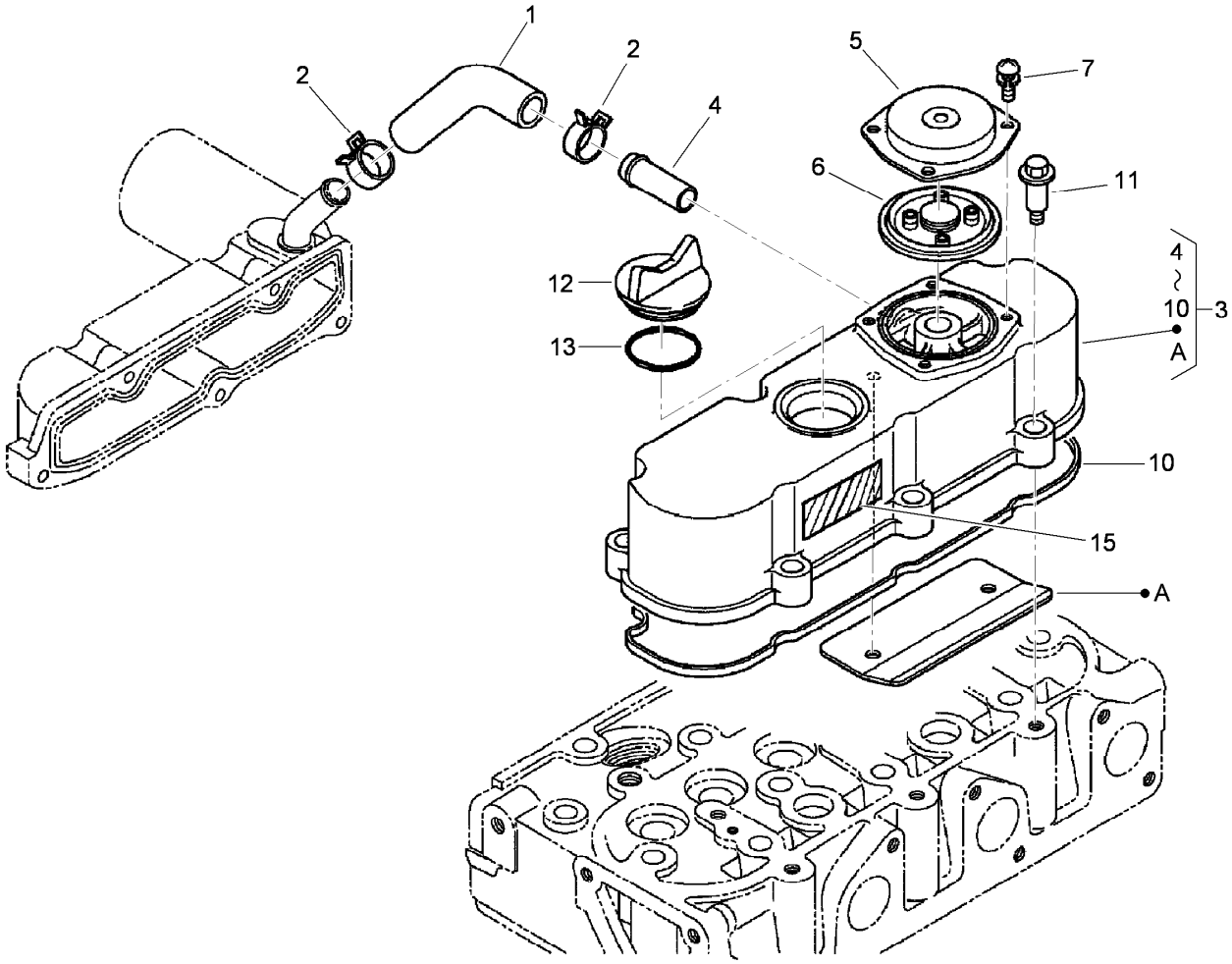

Cylinder Head Cover Assembly

Ref.	*Part Number*	*Qty.*	*Description*
1	110-3711	1	Tube-Breather
2	110-3712	2	Clamp-Hose
3	112-8332	1	Cylinder Head Cover ASM
4	98-9580	1	Pipe-Return, Water
5	110-3714	1	Cover-Breather
6	110-3715	1	Valve-Breather
7	98-9364	4	Screw (With Washer)
10	112-2521	1	Gasket-Cover, Head
11	108-7063	6	Bolt
12	107-9075	1	Plug-Filler, Oil
13	99-3446	1	O-Ring
15	110-3843	1	Label-Instruction

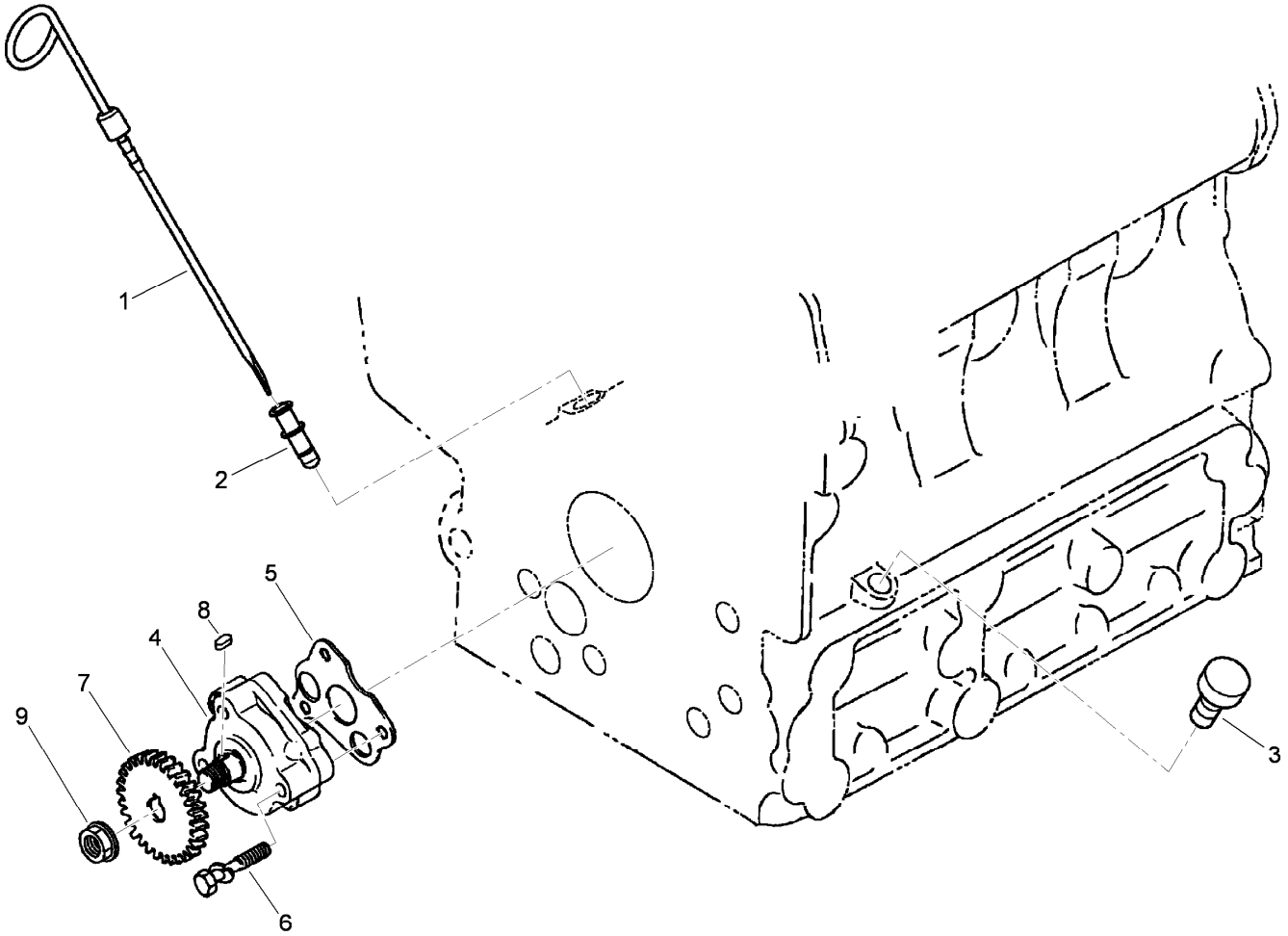

Dipstick, Guide and Oil Pump Assembly

Ref.	*Part Number*	*Qty.*	*Description*
1	110-3719	1	Gauge-Oil
2	105-4580	1	Guide-Gauge, Oil
3	110-3720	1	Plug-Gauge, Oil
4	100-2002	1	Oil Pump ASM
5	100-2003	1	Gasket-Pump, Oil
6	100-1923	3	Bolt
7	100-1893	1	Gear-Drive, Oil Pump
8	98-7658	1	Key-Feather
9	100-1779	1	Nut-Flange

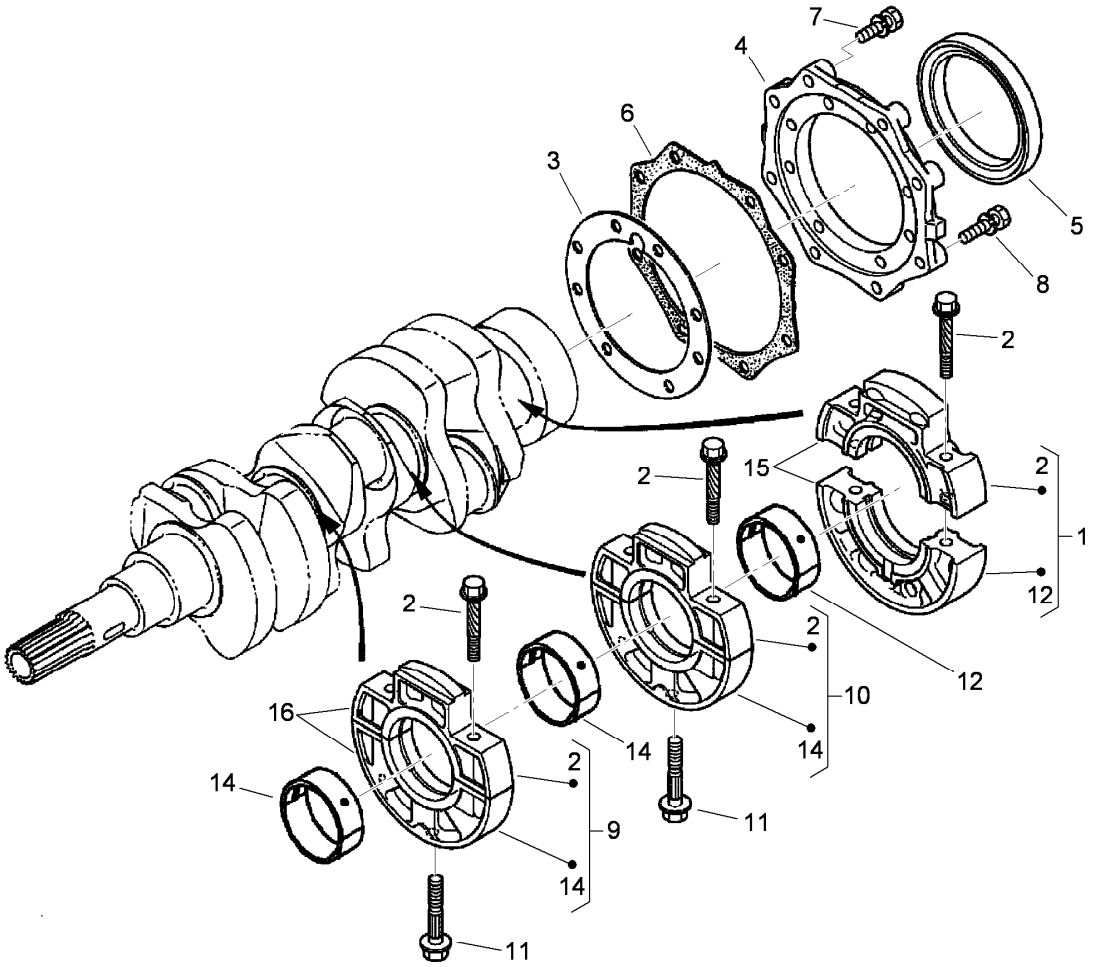

Main Bearing Case Assembly

Ref.	Part Number	Qty.	Description
1	112-2494	1	Wheel Case Bearing ASM
2	110-3723	6	Bolt-Case, Bearing
3	117-0304	1	Gasket-Case, Bearing
4	112-8334	1	Cover-Case, Bearing
5	110-3724	1	Seal-Oil
6	100-1876	1	Gasket-Case, Bearing
7	98-7568	8	Bolt
8	100-1750	8	Bolt
9	112-2495	1	Main Case Bearing ASM
10	112-2496	1	Main Case Bearing ASM
11	100-1874	2	Bolt-Case, Bearing
12	110-3744	1	Crankshaft Metal ASM (STD)
12	110-3745	1	Crankshaft Metal ASM
12	110-3746	1	Crankshaft Metal ASM
14	110-3741	2	Crankshaft Metal ASM (STD)
14	110-3742	2	Crankshaft Metal ASM
14	110-3743	2	Crankshaft Metal ASM
15	110-3722	1	Main Bearing Case ASM
16	110-3725	1	Main Bearing Case ASM

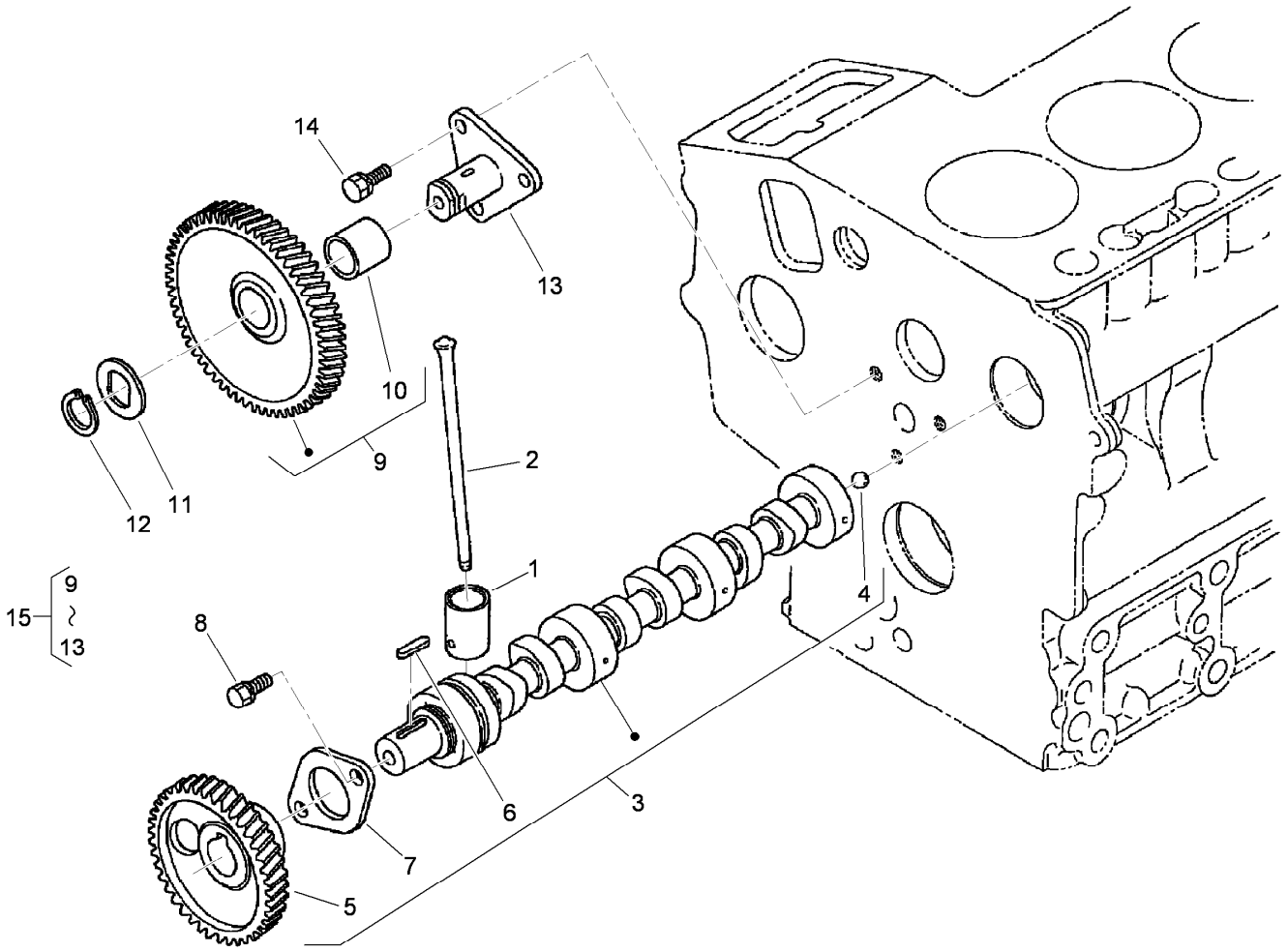

Cam Shaft and Idle Gear Assembly

Ref.	*Part Number*	*Qty.*	*Description*
1	110-3727	6	Tappet
2	100-1989	6	Rod-Push
3	117-0305	1	Camshaft ASM
4	110-3729	1	Ball
5	100-2163	1	Gear-Cam
6	98-9378	1	Key-Feather
7	100-1887	1	Camshaft-Stopper
8	98-9350	2	Bolt
9	100-1966	1	Gear-Idle
10	100-1968	1	Bushing
11	100-1970	1	Collar-Gear, Idle
12	100-1969	1	Ring-Snap
13	100-1967	1	Shaft-Gear, Idle
14	98-9351	1	Bolt
15	100-2240	1	Idle Gear ASM

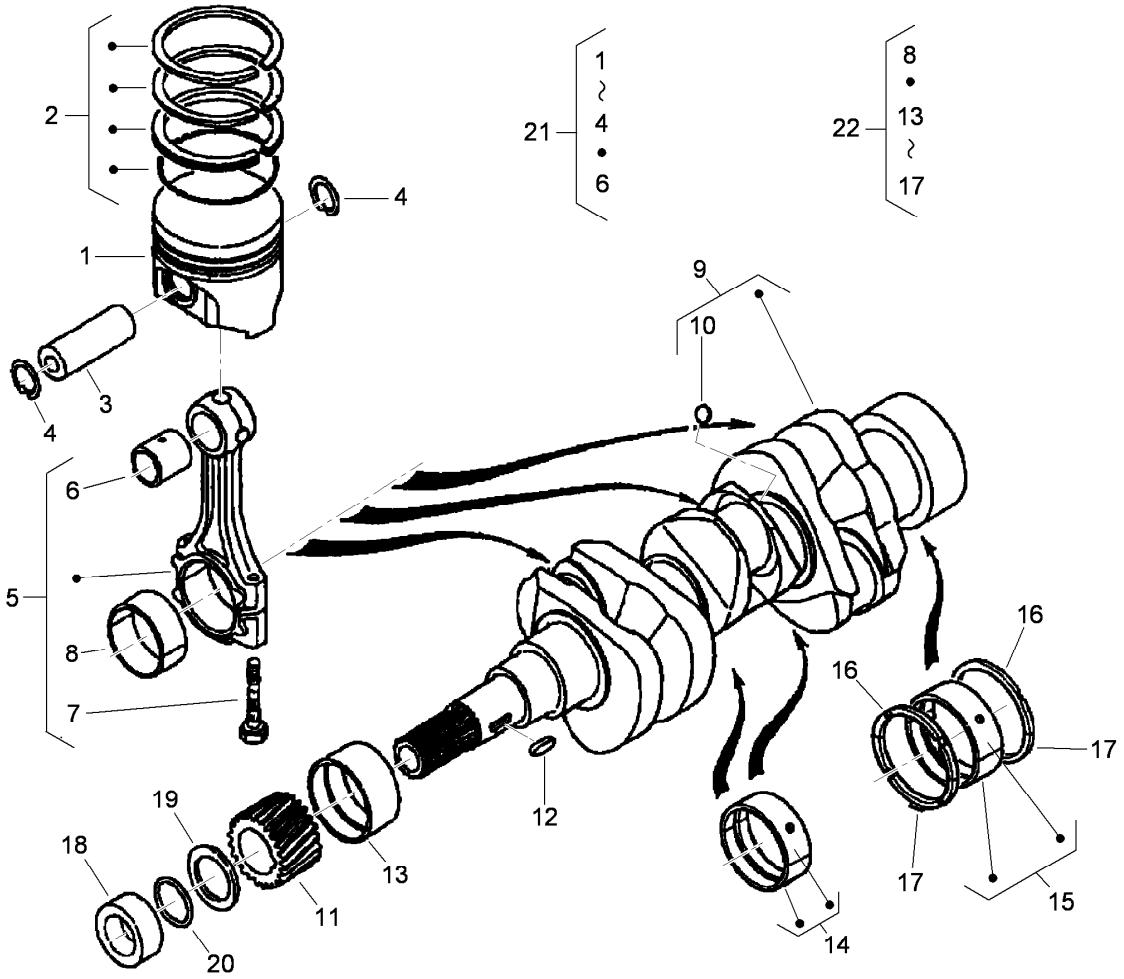

Piston and Crankshaft Assembly

Ref.	Part Number	Qty.	Description
1	117-0306	3	Piston
1	117-0307	3	Piston
2	112-2501	3	Piston Ring ASM
2	112-2502	3	Piston Ring ASM
3	110-3734	3	Pin-Piston
4	100-1835	6	Clip-Pin, Piston
5	110-3735	3	Connecting Rod ASM
6	110-3736	3	Bushing-Pin, Piston
7	100-1999	6	Bolt-Rod, Connecting
8	100-1942	3	Crankpin-Metal
8	100-1943	3	Crankpin-Metal
8	100-2000	3	Metal-Crankpin
9	117-0308	1	Crankshaft
10	100-1791	3	Ball
11	100-1891	1	Gear-Crankshaft
12	100-1752	1	Key-Feather
13	110-3738	1	Metal-Crankshaft
13	110-3739	1	Metal-Crankshaft
13	110-3740	1	Metal-Crankshaft
14	110-3741	1	Crankshaft Metal ASM (STD)
14	110-3742	1	Crankshaft Metal ASM
14	110-3743	1	Crankshaft Metal ASM
15	110-3744	1	Crankshaft Metal ASM (STD)
15	110-3745	1	Crankshaft Metal ASM
15	110-3746	1	Crankshaft Metal ASM
16	100-1836	2	Metal-Side
16	100-1838	2	Metal-Side
16	100-1839	2	Metal-Side
17	117-0309	2	Metal, Side
17	117-0310	2	Metal, Side
17	117-0311	2	Metal, Side
18	100-1890	1	Collar-Crankshaft
19	100-1974	1	Slinger-Oil
20	100-2209	1	O-Ring
21	117-0328	3	Piston Kit
21	117-0329	3	Piston Kit
22	110-3749	1	Engine Metal Kit
22	110-3750	1	Engine Metal Kit
22	110-3751	1	Engine Metal Kit

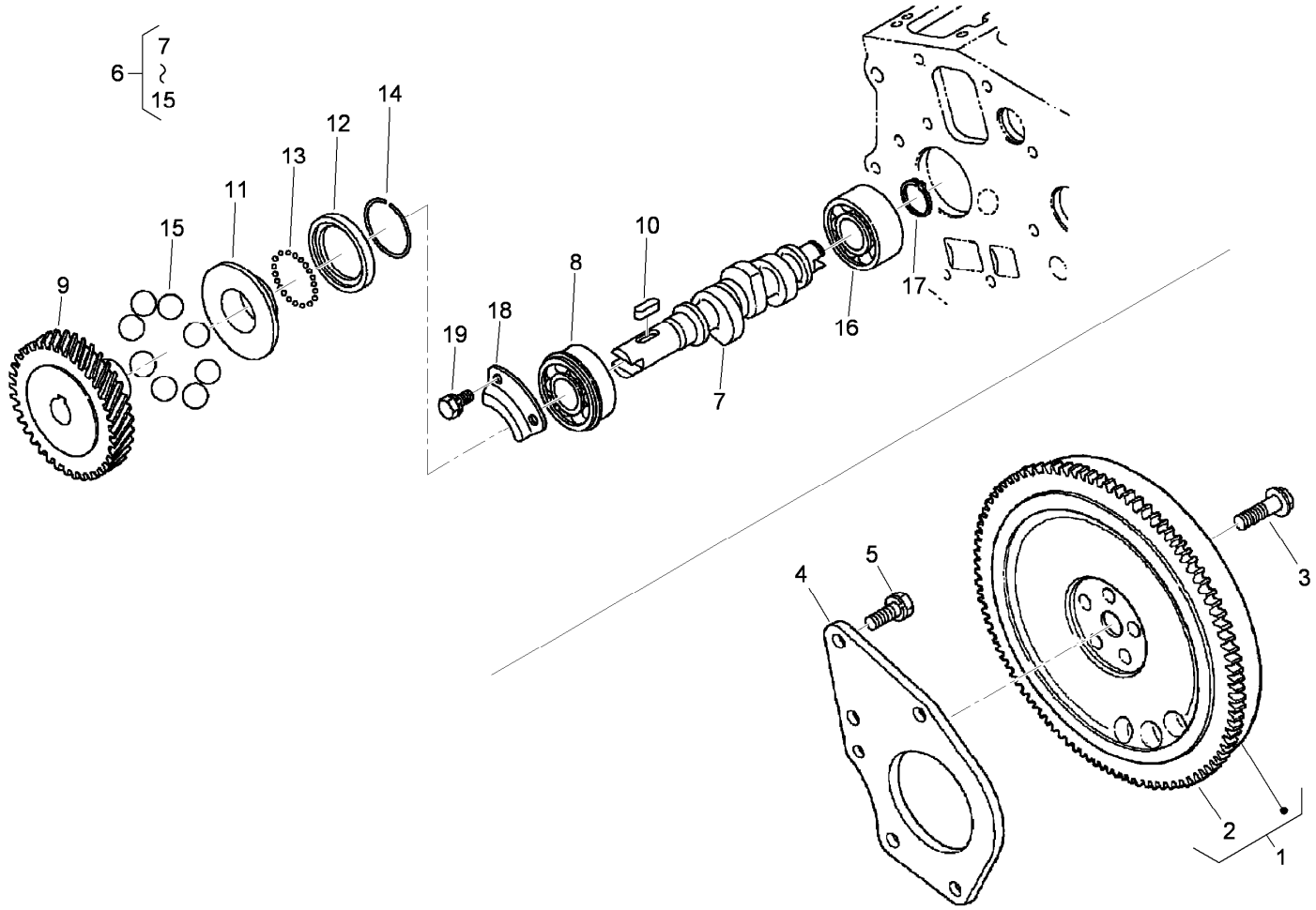

Flywheel and Fuel Camshaft Assembly

Ref.	Part Number	Qty.	Description
1	110-3752	1	Flywheel
2	112-2816	1	Gear-Ring
3	100-1930	5	Bolt-Flywheel
4	117-0323	1	Plate-End, Rear
5	110-3754	3	Bolt
6	112-8335	1	Fuel Camshaft ASM
7	110-3756	1	Camshaft-Fuel
8	100-1795	1	Bearing-Ball
9	100-2006	1	Gear-Pump, Injection
10	100-1752	1	Key-Feather
11	112-8336	1	Sleeve-Governor
12	100-1904	1	Case-Ball, Governor
13	100-1790	32	Ball
14	100-1843	1	Clip-Sleeve, Governor
15	100-1793	8	Ball
16	110-3757	1	Bearing-Ball
17	100-1784	1	Clip-External
18	100-1888	1	Stopper-Fuel, Camshaft
19	98-9350	2	Bolt

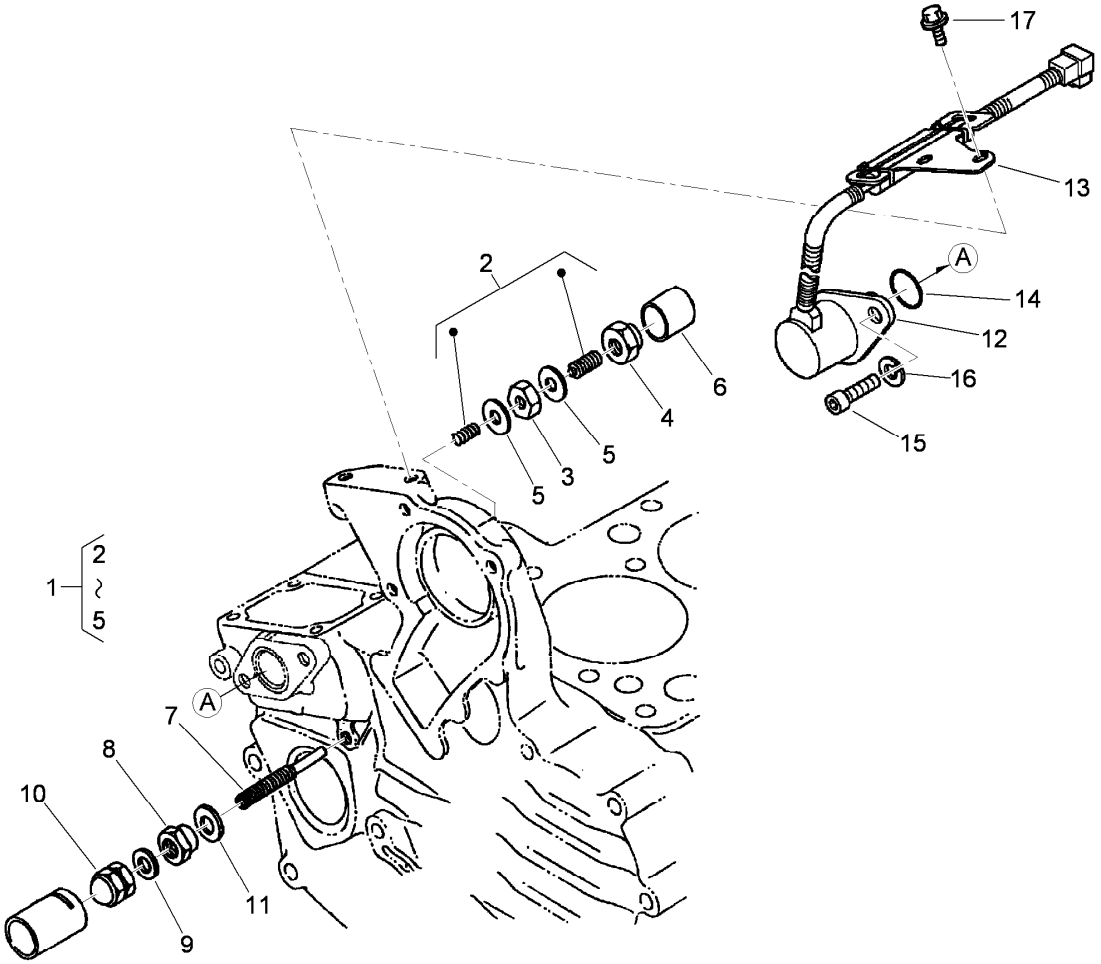

Idle Apparatus and Stop Solenoid Assembly

Ref.	Part Number	Qty.	Description
1	100-1898	1	Idle Apparatus ASM
2	100-1899	1	Adjusting Bolt ASM
3	100-1846	1	Nut
4	100-1901	1	Nut-Cap
5	98-7428	2	Gasket
6	100-1902	1	Cap
7	110-3758	1	Bolt-Adjusting
8	100-2175	1	Nut-Lock
9	98-7654	1	Gasket
10	99-8387	1	Nut-Cap
11	107-9081	1	Gasket
12	110-3760	1	Solenoid-Stop
13	110-3761	1	Stay-Commander, Coil
14	110-3762	1	O-Ring
15	110-3763	2	Bolt-HSH
16	98-7699	2	Washer-Spring
17	100-1774	2	Bolt-Flange

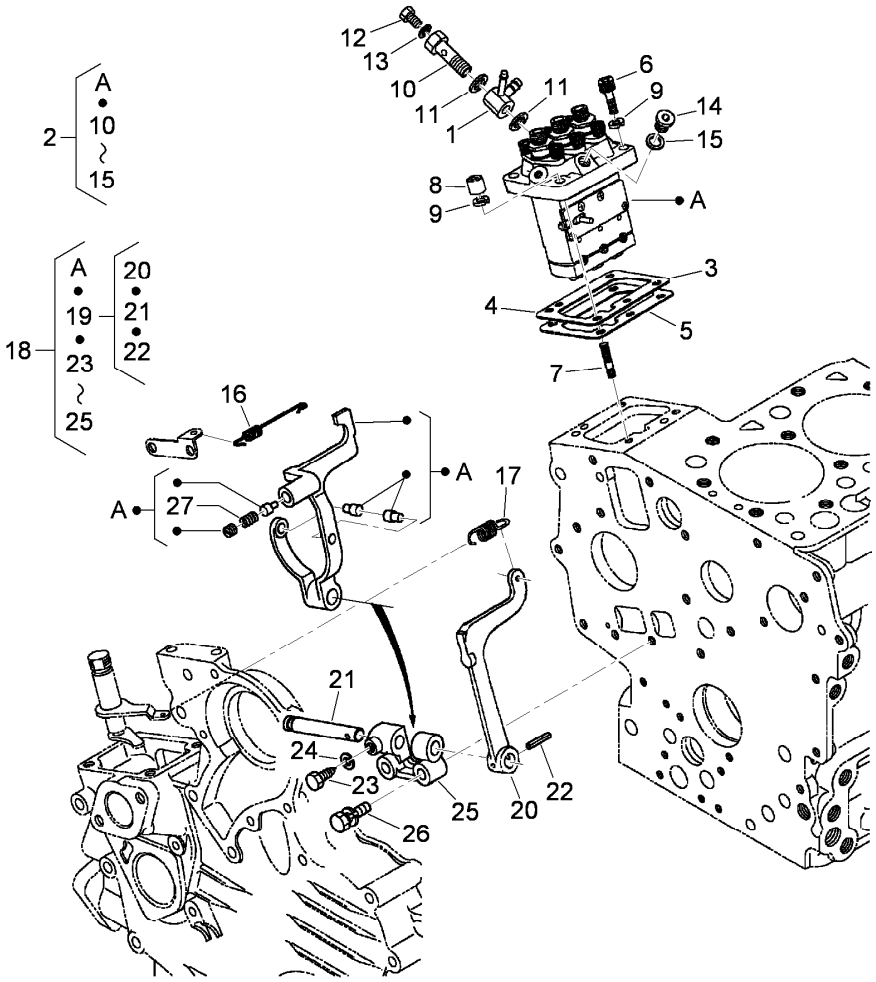

Injection Pump and Governor Assembly

Ref.	Part Number	Qty.	Description
1	110-3764	1	Joint
2	110-3765	1	Injection Pump ASM
3	98-9456	1	Shim-Injection (0.20Mm)
4	115-3045	1	Shim-Injection (0.175Mm)
5	115-3046	1	Shim-Injection (0.35Mm)
6	98-9361	2	Bolt-HSH
7	98-9438	2	Stud
8	98-9440	2	Nut-Cap
9	98-7699	4	Washer-Spring
10	100-1896	1	Screw-Hollow
11	98-9445	2	Gasket
12	98-9430	1	Screw
13	98-9446	1	Gasket
14	98-9466	1	Plug

Ref.	Part Number	Qty.	Description
15	98-9451	1	Gasket
16	110-3766	1	Spring-Start
17	110-3767	1	Spring-Governor
18	112-8337	1	Fork Lever ASM
19	100-1905	1	Fork Lever ASM
20	100-1907	1	Lever-Fork
21	100-1908	1	Shaft-Lever, Fork
22	100-1751	1	Pin-Spring
23	100-1845	1	Bolt
24	100-2204	1	Washer-Spring
25	100-1909	1	Holder-Lever, Fork
26	100-1763	2	Bolt
27	117-0313	1	Spring

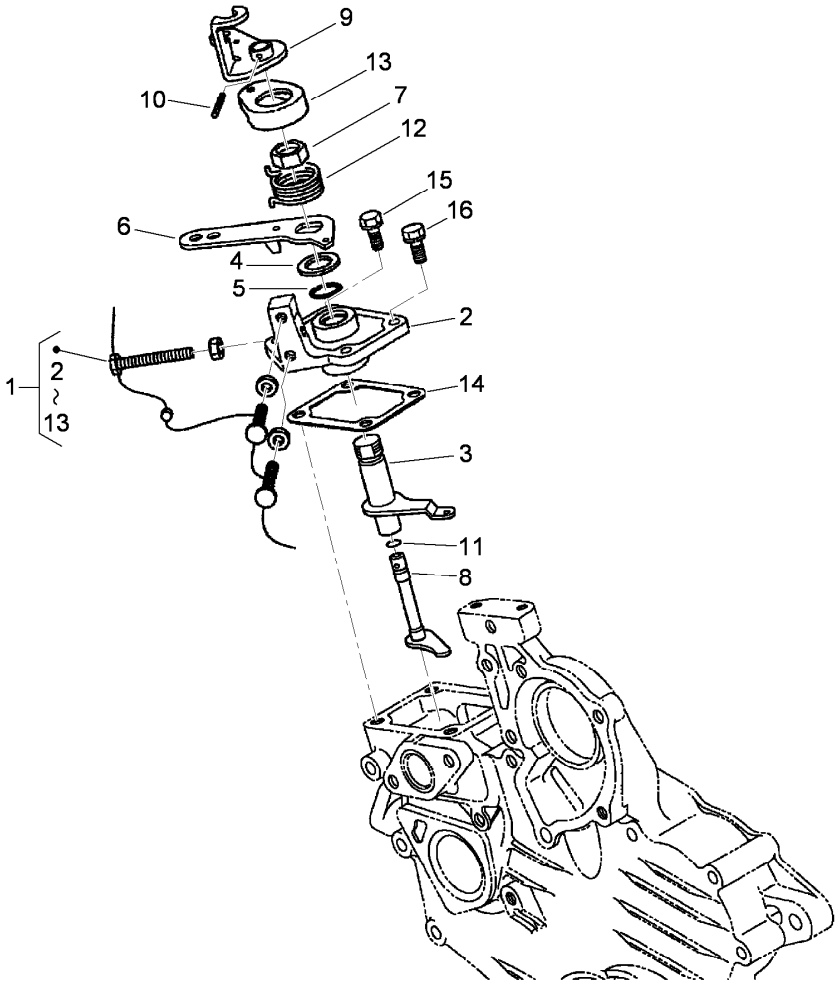

Speed Control Plate Assembly

Ref.	*Part Number*	*Qty.*	*Description*
1	110-3769	1	Speed Control Plate ASM
2	110-3770	1	Plate-Control, Speed
3	110-3771	1	Lever-Governor
4	110-3772	1	Collar
5	100-2208	1	O-Ring
6	110-3773	1	Lever-Control, Speed
7	110-3774	1	Nut-Control, Speed
8	110-3775	1	Shaft-Lever
9	110-3776	1	Lever-Stop, Engine
10	110-3777	1	Pin-Spring
11	100-2207	1	O-Ring
12	110-3778	1	Spring-Return
13	110-3779	1	Cap
14	100-1962	1	Gasket-Plate, Control
15	98-7605	2	Bolt
16	112-2507	2	Bolt

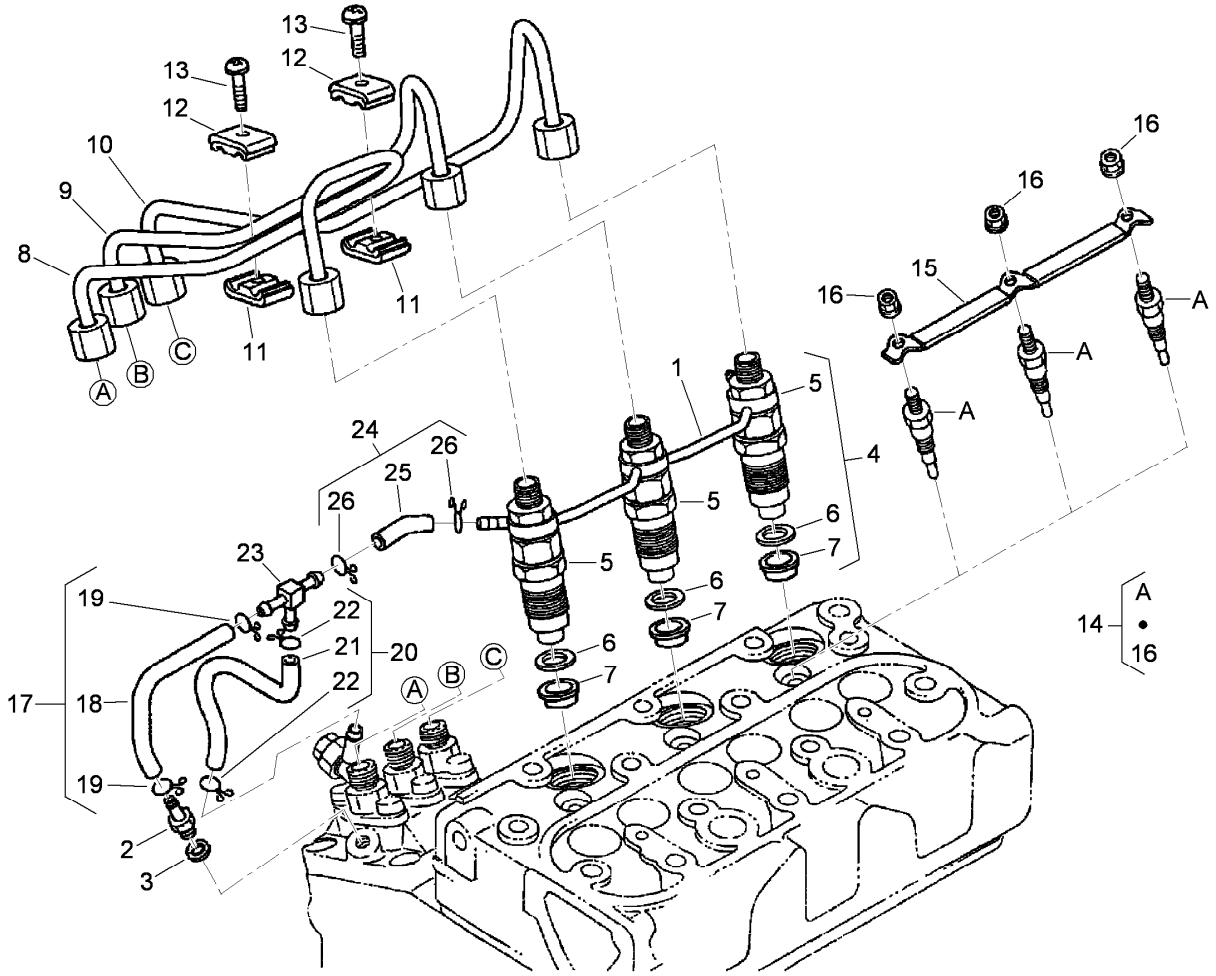

Nozzle Holder and Glow Plug Assembly

Ref.	Part Number	Qty.	Description
1	110-3780	1	Over Flow Pipe ASM
2	98-9431	1	Screw-Bleeder, Air
3	98-7654	1	Gasket
4	100-1982	3	Nozzle Holder Kit
5	100-1758	3	Nozzle Holder ASM
6	98-7676	3	Gasket
7	98-7677	3	Seal-Heat
8	110-3781	1	Pipe-Injection
9	110-3782	1	Pipe-Injection
10	110-3783	1	Pipe-Injection
11	98-7682	2	Clamp-Pipe
12	98-7683	2	Clamp-Pipe
13	98-7684	2	Screw (W/Washer)

Ref.	Part Number	Qty.	Description
14	98-7685	3	Plug-Glow
15	110-3784	1	Cord-Plug, Glow
16	99-8377	3	Nut-Flange
17	110-3785	1	Fuel Tube ASM
18	110-3786	1	Tube-Fuel
19	98-7671	4	Clip-Pipe
20	110-3787	1	Fuel Tube ASM
21	110-3788	1	Tube-Fuel
22	98-7671	2	Clip-Pipe
23	112-8338	1	Pipe-Joint, T
24	110-3790	1	Fuel Tube ASM
25	110-3791	1	Tube-Fuel
26	100-2217	2	Clip-Pipe

Nozzle Holder Assembly

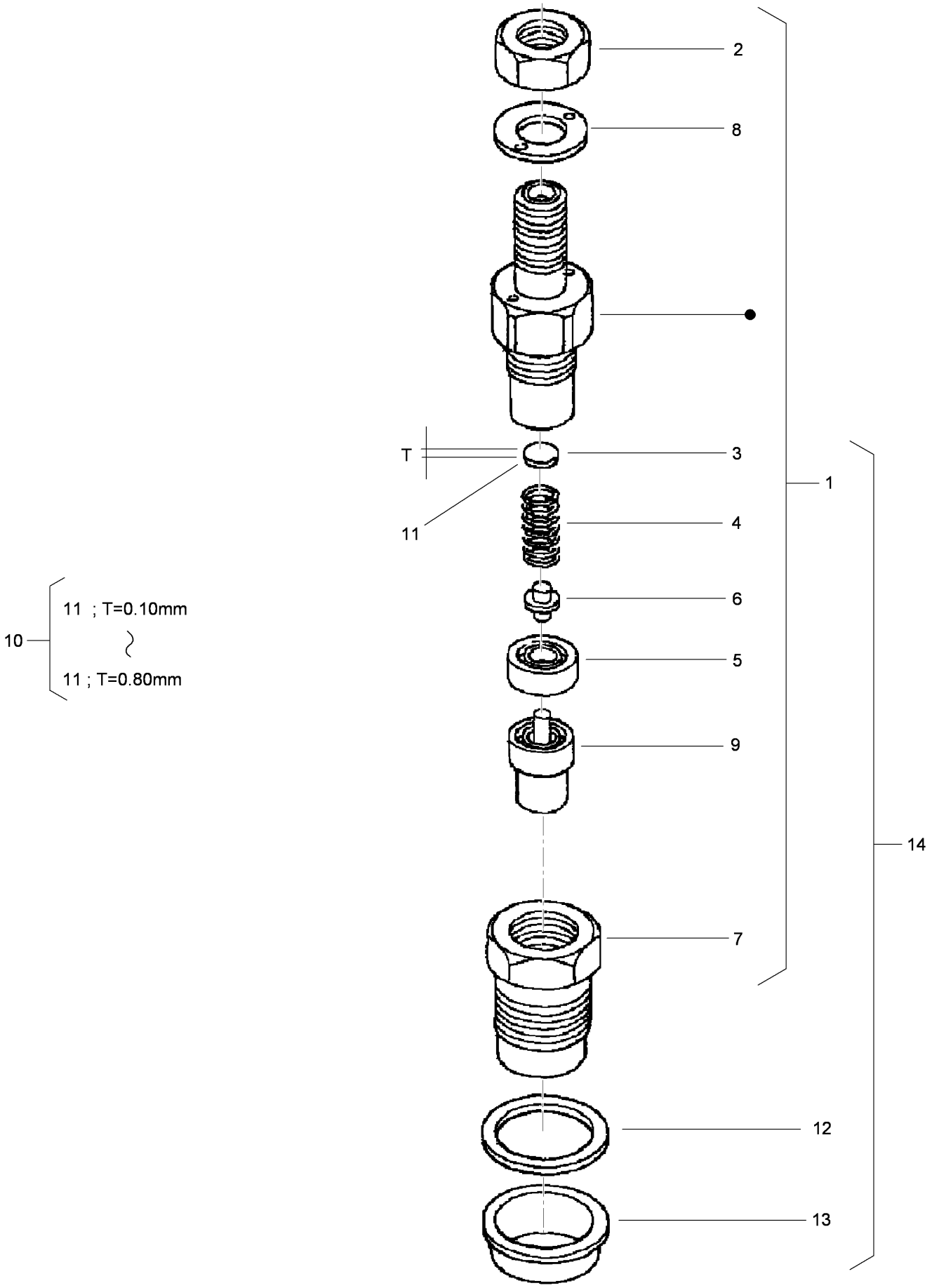

Nozzle Holder Assembly (continued)

Ref.	Part Number	Qty.	Description
1	100-1758	3	Nozzle Holder ASM
2	98-7613	3	Nut
3	98-7642	3	Washer-Adjusting
4	98-7647	3	Spring-Nozzle
5	98-7665	3	Spacer-Distance
6	98-7666	3	Rod-Push
7	100-2008	3	Nut-Nozzle
8	98-7668	3	Washer
9	100-2009	3	Piece-Nozzle
10	98-9448	3	Adjusting Washer ASM
11	98-7642	3	Washer-Adjusting
11	98-7841	3	Washer-Adjusting
11	98-7842	3	Washer-Adjusting
11	98-7843	3	Washer-Adjusting
11	98-7844	3	Washer-Adjusting
11	98-7845	3	Washer-Adjusting
11	98-7846	3	Washer-Adjusting
11	98-7847	3	Washer-Adjusting
11	98-7848	3	Washer-Adjusting
11	98-7849	3	Washer-Adjusting
11	98-7850	3	Washer-Adjusting
11	98-7851	3	Washer-Adjusting
11	98-7852	3	Washer-Adjusting
11	98-7853	3	Washer-Adjusting
11	98-7854	3	Washer-Adjusting
11	98-7855	3	Washer-Adjusting
11	98-7856	3	Washer-Adjusting
11	98-7857	3	Washer-Adjusting
11	98-7858	3	Washer-Adjusting
11	98-7859	3	Washer-Adjusting
11	98-7860	3	Washer-Adjusting
11	98-7861	3	Washer-Adjusting
11	98-7862	3	Washer-Adjusting
11	98-7863	3	Washer-Adjusting
11	98-7864	3	Washer-Adjusting
11	98-7865	3	Washer-Adjusting
11	98-7866	3	Washer-Adjusting
11	98-7867	3	Washer-Adjusting
11	98-7868	3	Washer-Adjusting
11	98-7869	3	Washer-Adjusting
11	98-7870	3	Washer-Adjusting
11	98-7871	3	Washer-Adjusting
11	98-7872	3	Washer-Adjusting
11	98-7873	3	Washer-Adjusting
11	98-7874	3	Washer-Adjusting
11	98-7875	3	Washer-Adjusting
11	98-7876	3	Washer-Adjusting
11	98-7877	3	Washer-Adjusting
11	98-7878	3	Washer-Adjusting
11	98-7879	3	Washer-Adjusting
11	98-7880	3	Washer-Adjusting
11	98-7881	3	Washer-Adjusting
11	98-7882	3	Washer-Adjusting
12	98-7676	3	Gasket
13	98-7677	3	Seal-Heat
14	100-1982	3	Nozzle Holder Kit

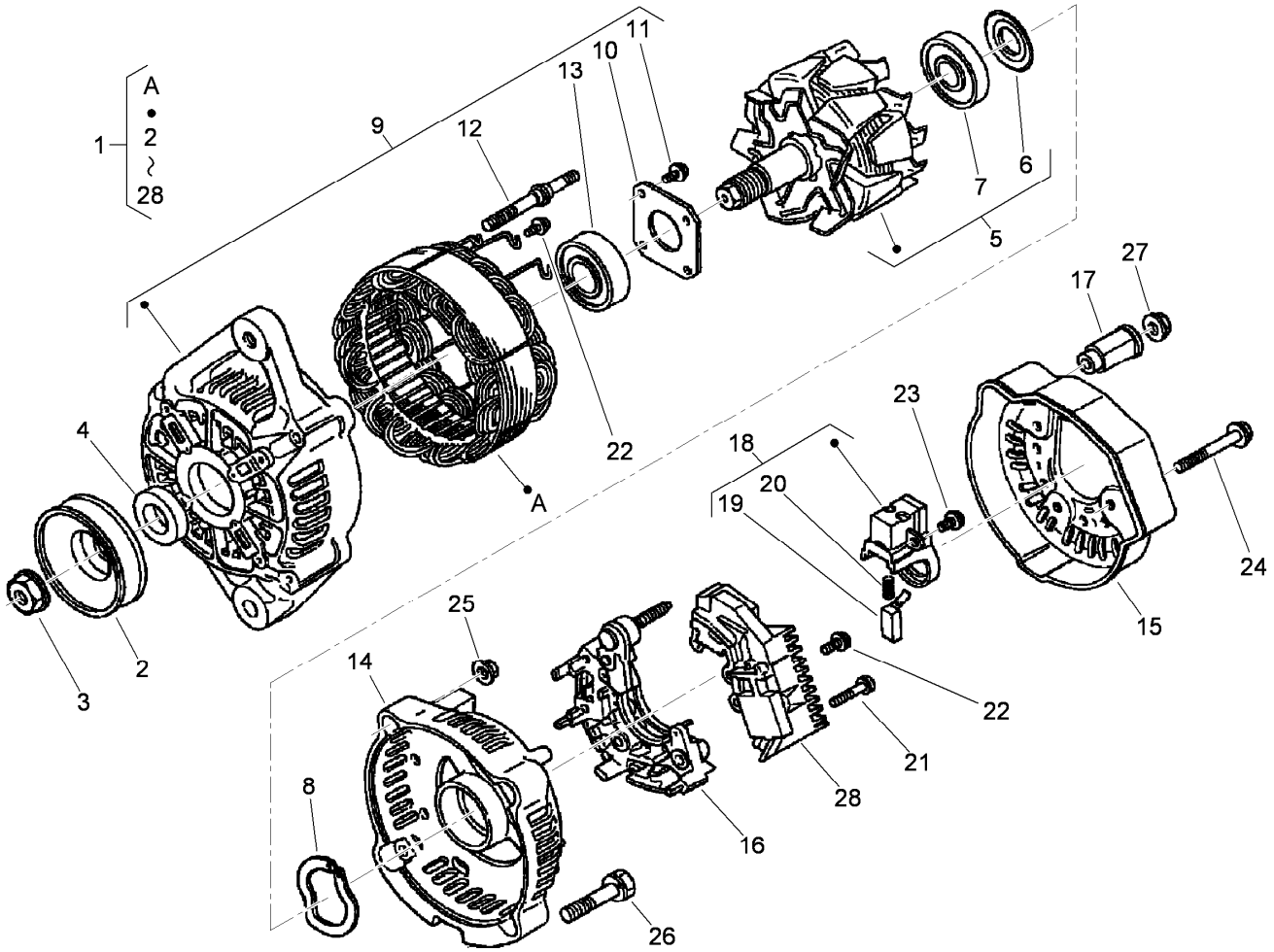

Alternator Components Assembly

Ref.	Part Number	Qty.	Description
1	98-9474	1	Alternator ASM
2	98-9453	1	Pulley-Dynamo
3	98-7708	1	Nut
4	98-7709	1	Collar
5	107-0136	1	Rotor ASM
6	98-7711	1	Cover-Bearing
7	107-0138	1	Bearing-Ball
8	98-7713	1	Washer-Thrust
9	107-0139	1	Drive End Frame ASM
10	98-7715	1	Plate-Retainer
11	98-7716	4	Screw-Head, Round
12	98-7717	2	Bolt-Through
13	107-0137	1	Bearing-Ball
14	107-9087	1	Frame-End

Ref.	Part Number	Qty.	Description
15	107-0140	1	Cover-End
16	98-7721	1	Rectifier ASM
17	98-7722	1	Bushing-Insulation
18	107-0141	1	Brush Holder ASM
19	98-7724	2	Brush
20	98-7725	2	Spring-Brush
21	98-7726	2	Screw-Head, Round
22	98-7727	6	Screw-Head, Round
23	98-7728	1	Screw-Head, Round
24	98-7729	3	Bolt
25	98-7730	2	Nut
26	98-7731	2	Bolt
27	98-7732	1	Nut
28	110-3799	1	Regulator ASM

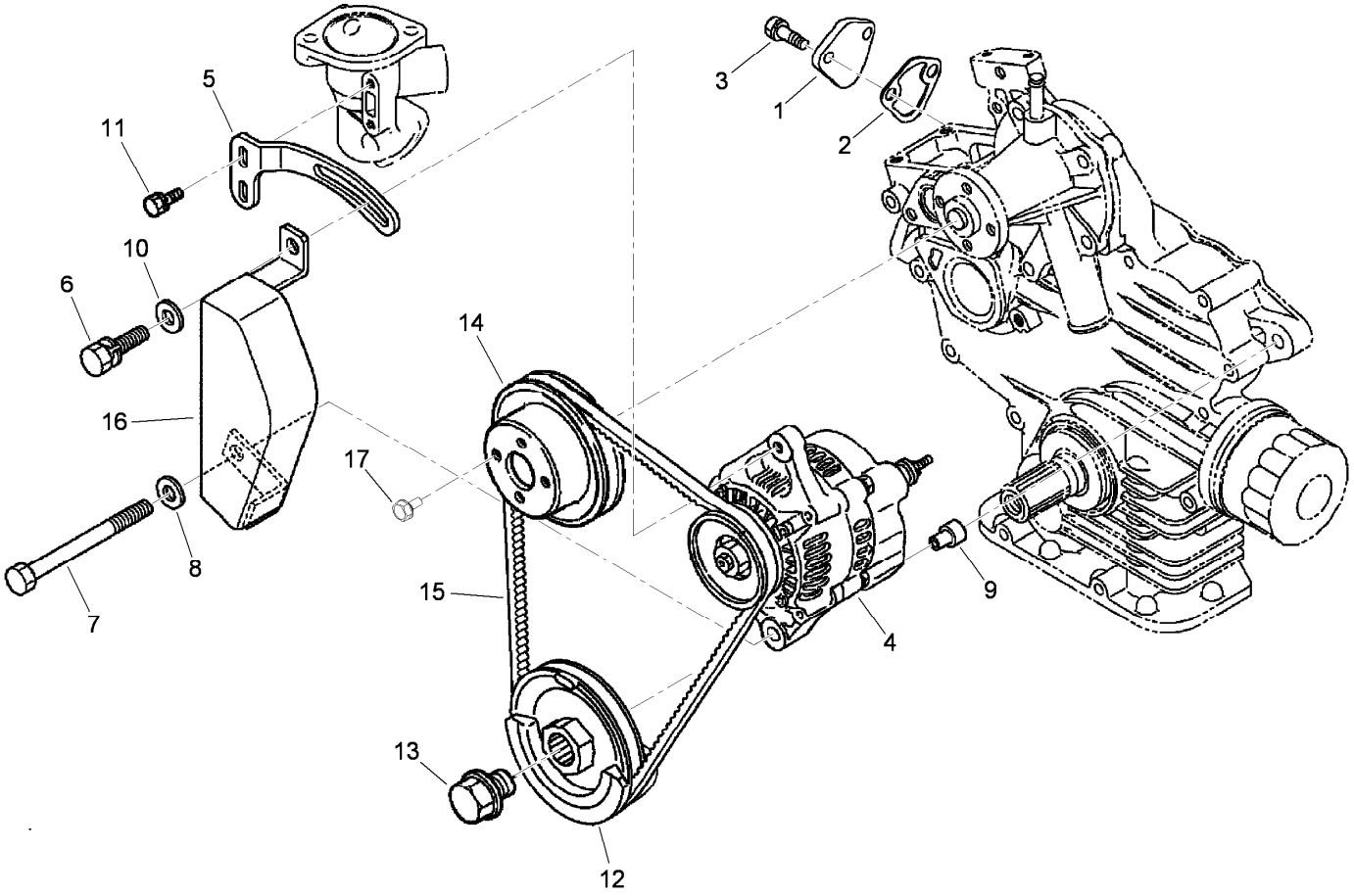

Alternator, Pulley and Fuel Pump Cover Assembly

Ref.	*Part Number*	*Qty.*	*Description*
1	99-3514	1	Cover
2	98-9636	1	Gasket-Pump, Fuel
3	98-7692	2	Bolt
4	98-9474	1	Alternator ASM
5	110-3792	1	Stay-Alternator
6	98-7697	1	Bolt
7	110-3793	1	Bolt
8	98-7660	1	Washer-Plain
9	110-3794	1	Collar
10	100-9233	1	Washer-Plain
11	98-7605	2	Bolt
12	110-3795	1	Pulley-Drive, Fan
13	100-1978	1	Bolt
14	100-1921	1	Pulley-Fan
15	110-3796	1	Belt-V
16	110-3797	1	Cover
17	99-8363	4	Bolt-Flange

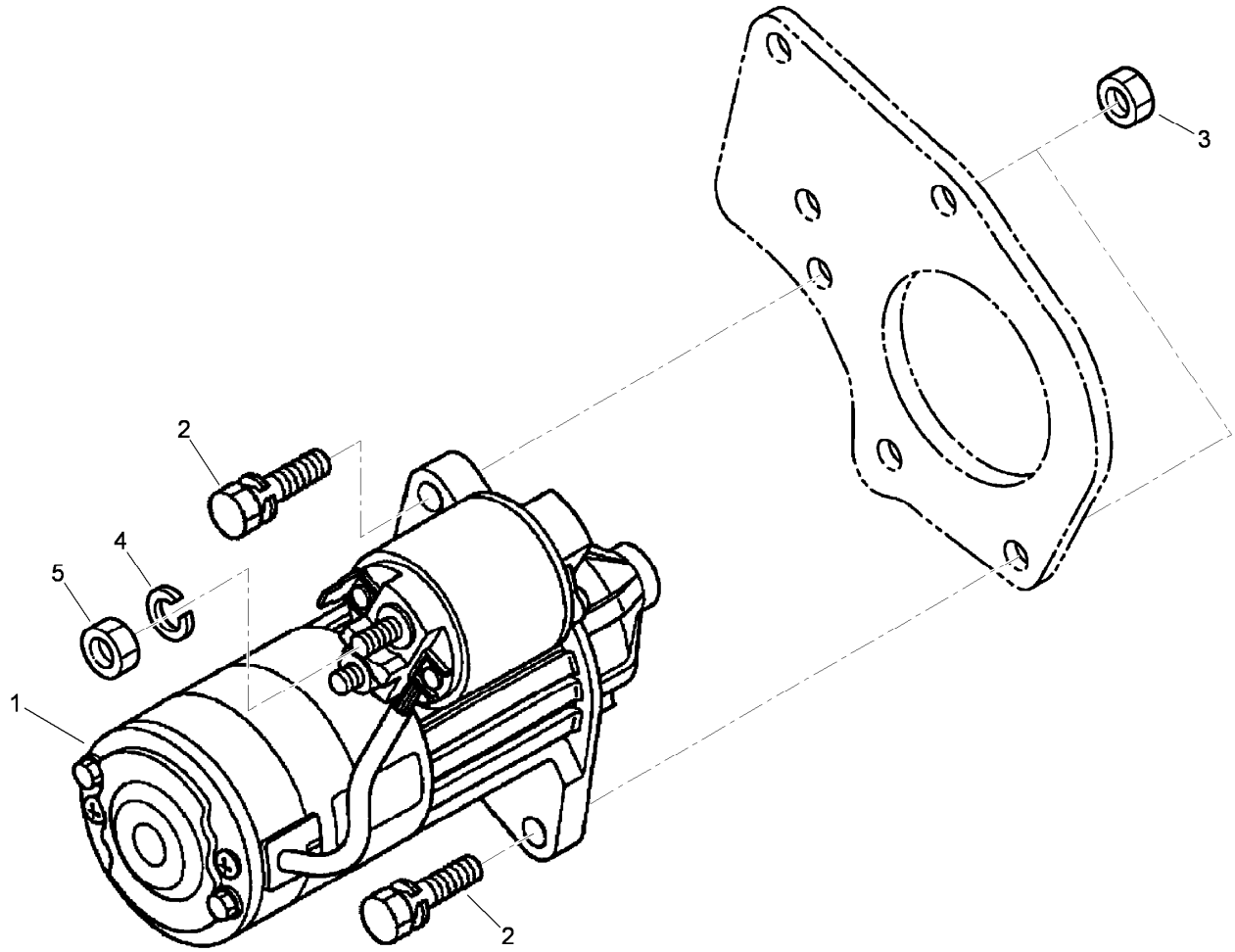

Starter Assembly

Ref.	*Part Number*	*Qty.*	*Description*
1	110-3800	1	Starter ASM
2	100-1770	2	Bolt
3	98-7661	2	Nut
4	98-7535	1	Washer-Spring
5	98-7534	1	Nut

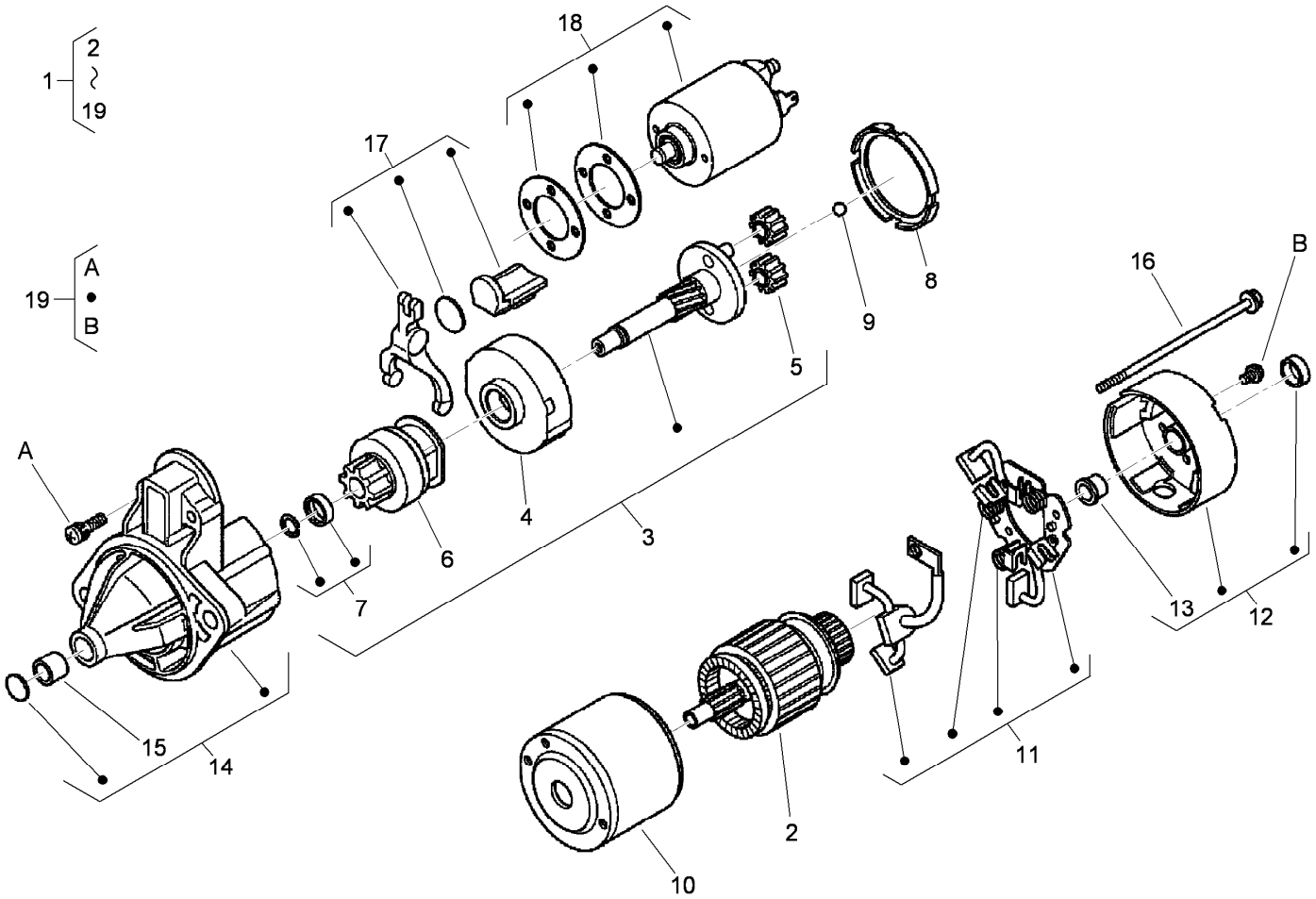

Starter Components Assembly

Ref.	Part Number	Qty.	Description
1	110-3800	1	Starter ASM
2	110-3801	1	Armature
3	110-3802	1	Shaft ASM
4	110-3803	1	Gear-Internal
5	110-3804	3	Gear-Planetary
6	110-3805	1	Clutch-Running, Over
7	110-3806	1	Stopper
8	110-3807	1	Gasket
9	110-3808	1	Ball
10	110-3809	1	Yoke
11	110-3810	1	Brush Holder ASM
12	110-3811	1	Rear Bracket ASM
13	110-3812	1	Bushing
14	110-3813	1	Front Bracket ASM
15	110-3814	1	Bushing
16	110-3815	2	Bolt
17	110-3816	1	Fork Lever ASM
18	110-3817	1	Magnetic Switch ASM
19	110-3818	1	Screws (Set Of 4)

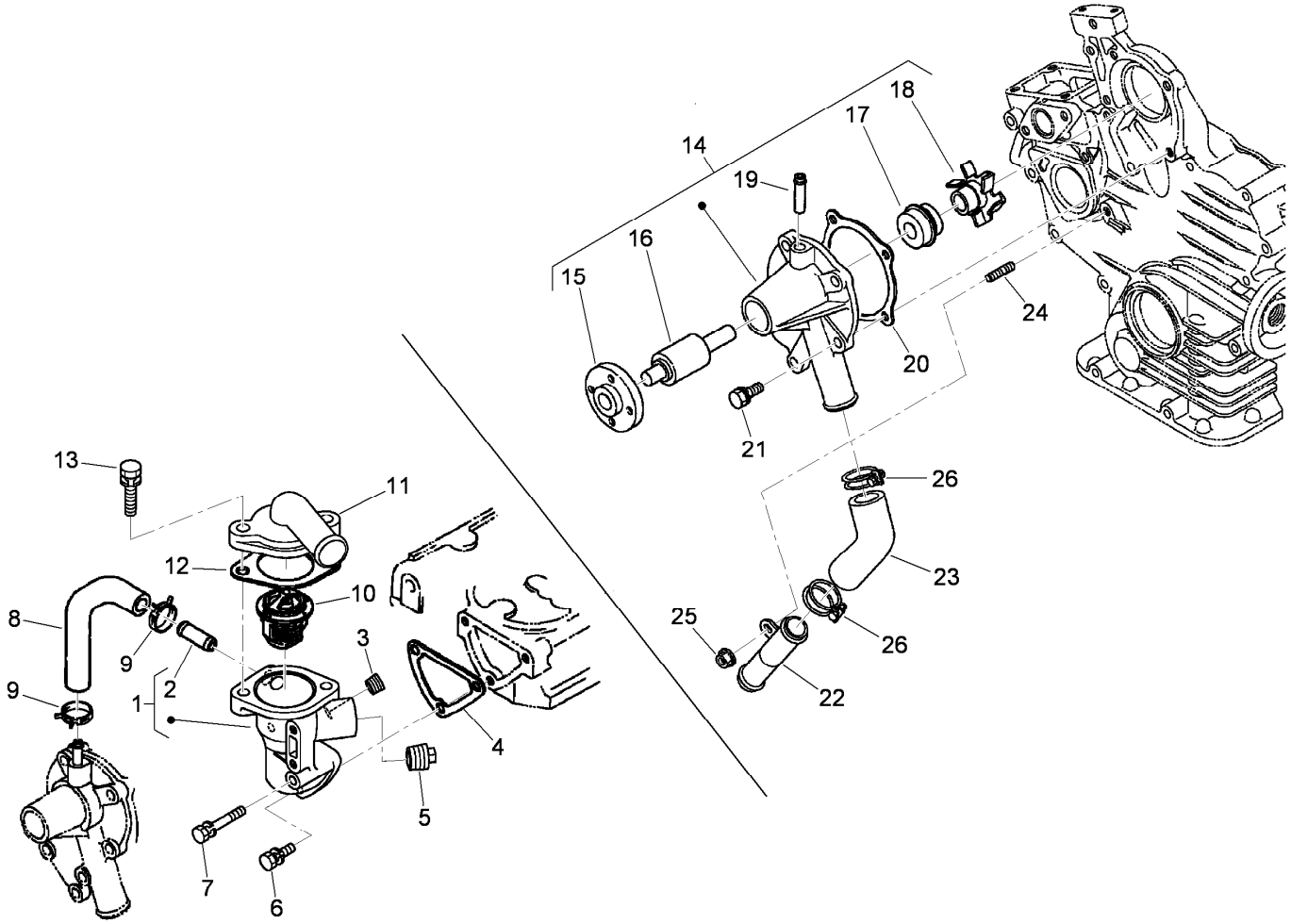

Water Flange and Thermostat Assembly

Ref.	Part Number	Qty.	Description
1	110-3819	1	Flange-Water
2	98-9580	1	Pipe-Return, Water
3	98-9444	1	Plug
4	110-3820	1	Gasket-Flange, Water
5	110-3821	1	Plug
6	98-7692	2	Bolt
7	105-3797	1	Bolt
8	110-3822	1	Pipe-Return, Water
9	98-9579	2	Band-Pipe
10	98-7778	1	Thermostat ASM
11	110-3823	1	Cover-Thermostat
12	105-3748	1	Gasket-Thermostat
13	98-7777	2	Bolt

Ref.	Part Number	Qty.	Description
14	110-3824	1	Water Pump ASM
15	100-1933	1	Flange-Pump, Water
16	100-1934	1	Bearing-Ball
17	99-3518	1	Water Pump Seal ASM
18	110-3825	1	Impeller-Pump, Water
19	100-1932	1	Pipe-Return, Water
20	117-0330	1	Gasket-Pump, Water
21	100-1750	4	Bolt
22	100-1918	1	Pipe-Water
23	110-3827	1	Pipe-Water
24	100-1924	1	Stud
25	100-2203	1	Nut-Flange
26	110-3828	2	Band-Pipe

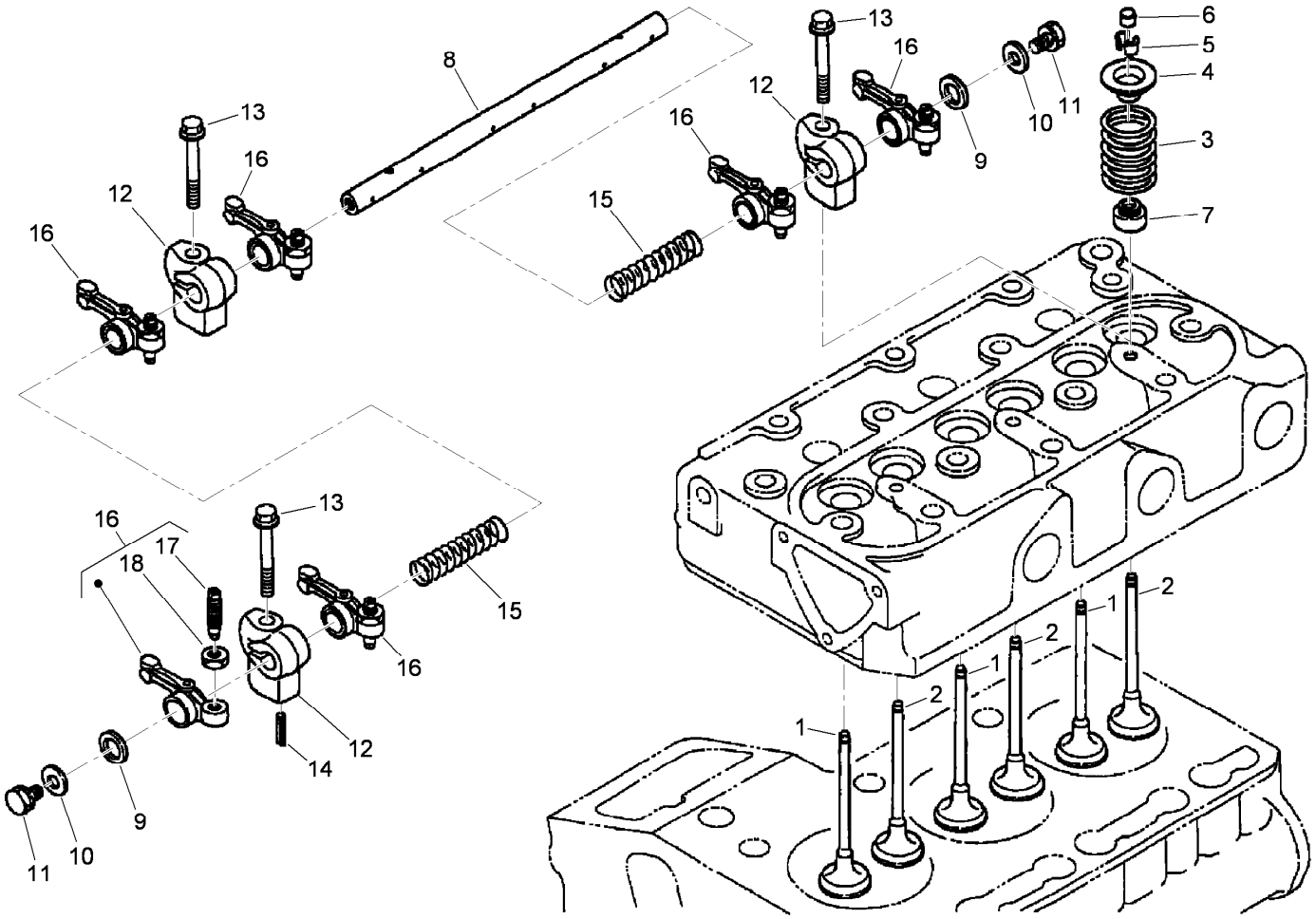

Valve and Rocker Arm Assembly

Ref.	Part Number	Qty.	Description
1	112-2514	3	Valve-Inlet
2	112-2515	3	Valve-Exhaust
3	100-1823	6	Spring-Valve
4	100-1825	6	Retainer-Spring, Valve
5	100-1826	6	Collet-Spring, Valve
6	100-2155	6	Cap-Valve
7	100-1797	6	Seal-Stem, Valve
8	112-8341	1	Shaft-Arm, Rocker
9	100-2044	2	Washer
10	110-3832	2	Washer-Plain
11	100-1762	2	Bolt
12	110-3833	3	Bracket-Arm, Rocker
13	110-3834	3	Bolt-Flange
14	98-7602	1	Pin-Spring
15	112-8342	2	Spring
16	100-1884	6	Rocker Arm ASM
17	100-1885	6	Screw-Adjusting
18	100-1827	6	Nut

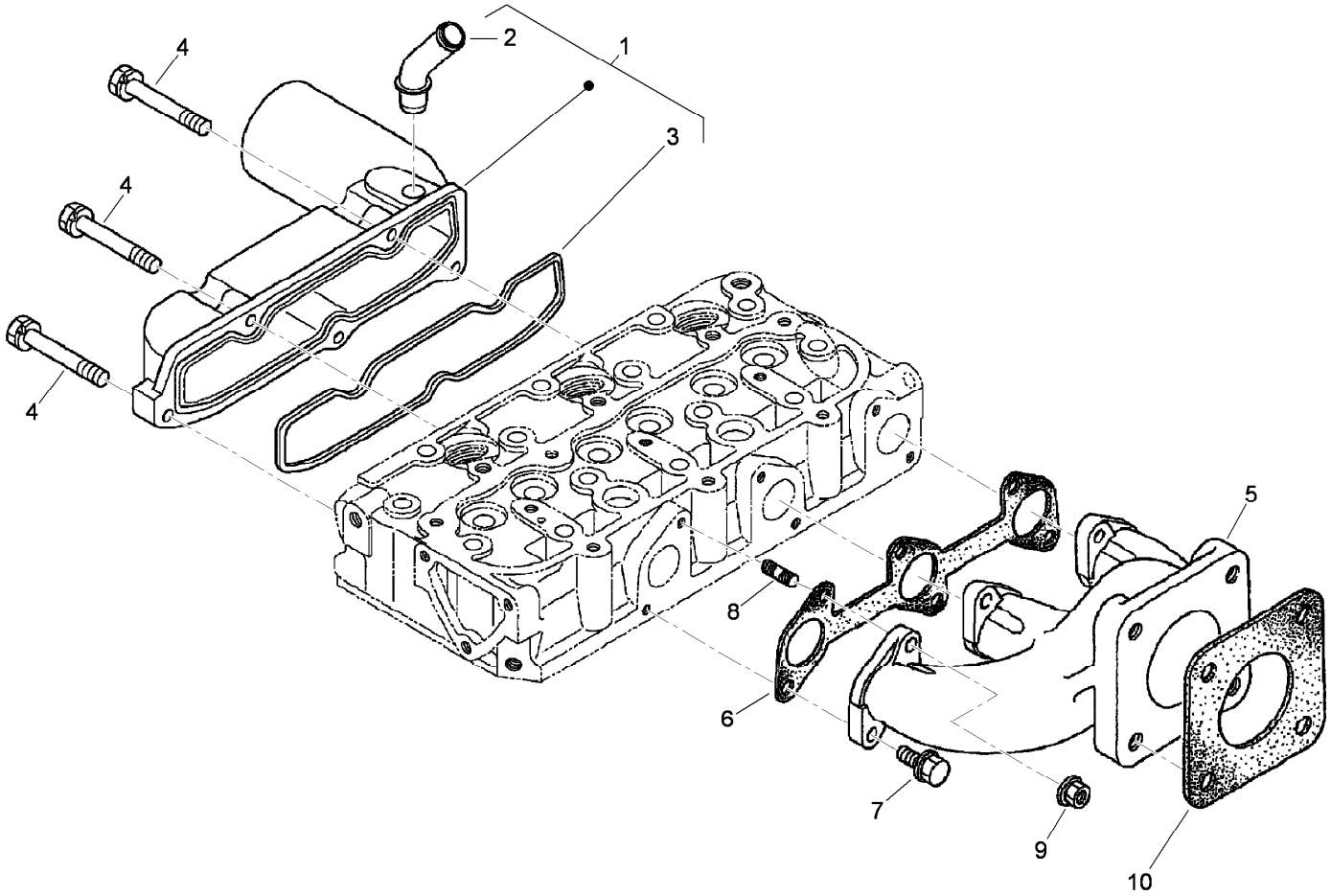

Inlet and Exhaust Manifold Assembly

Ref.	*Part Number*	*Qty.*	*Description*
1	110-3836	1	Inlet Manifold ASM
2	110-3837	1	Pipe-Breather
3	110-3838	1	Gasket-Manifold, Intake
4	98-9352	5	Bolt
5	110-3839	1	Manifold-Exhaust
6	110-3840	1	Gasket-Manifold, Exhaust
7	100-1775	3	Bolt
8	100-2202	3	Stud
9	100-1778	3	Nut
10	99-8343	1	Gasket-Muffler

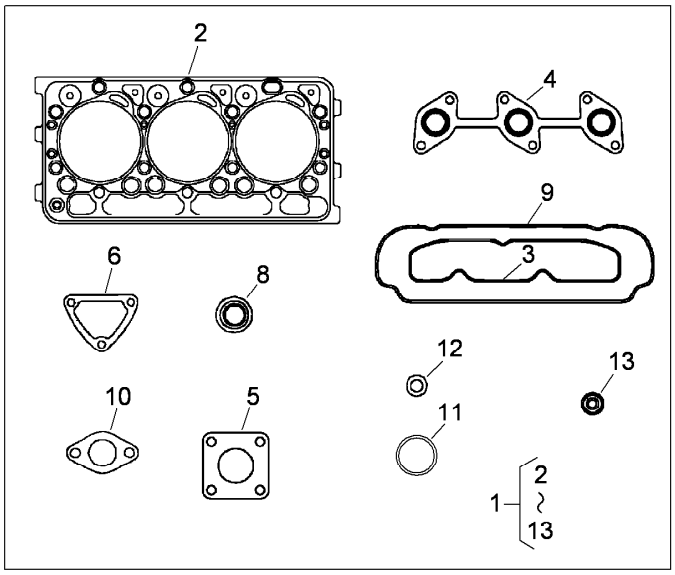

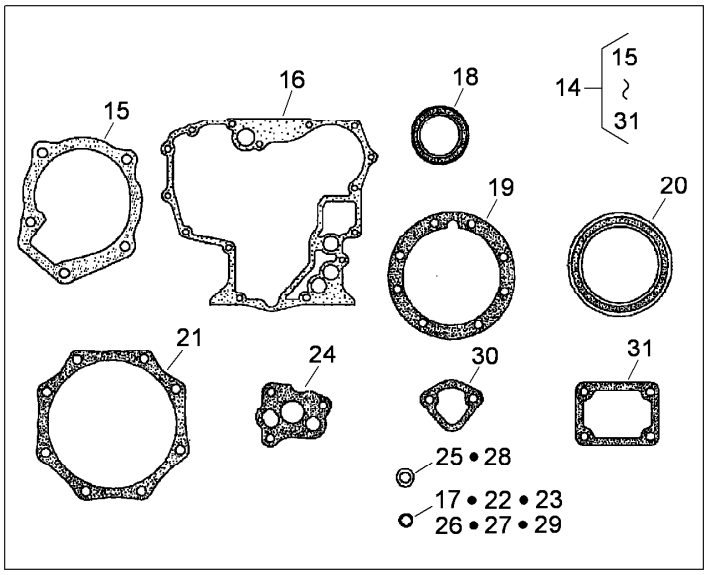

Upper and Lower Gasket Kits

Ref.	Part Number	Qty.	Description
1	112-2518	1	Upper Gasket Kit
2	112-2520	1	Gasket-Head, Cylinder
3	110-3838	1	Gasket-Manifold, Intake
4	110-3840	1	Gasket-Manifold, Exhaust
5	99-8343	1	Gasket-Muffler
6	110-3820	1	Gasket-Flange, Water
8	100-1797	6	Seal-Stem, Valve
9	112-2521	1	Gasket-Cover, Head
10	105-3748	1	Gasket-Thermostat
11	99-3446	1	O-Ring
12	98-7676	3	Gasket
13	98-7677	3	Seal-Heat
14	117-0331	1	Lower Gasket Kit
15	117-0330	1	Gasket-Pump, Water
16	117-0327	1	Gasket-Case, Gear

Ref.	Part Number	Qty.	Description
17	110-3762	1	O-Ring
18	100-1971	1	Seal-Oil
19	100-1873	1	Gasket-Case, Bearing
20	110-3724	1	Seal-Oil
21	100-1876	1	Gasket-Case, Bearing
22	100-2206	3	O-Ring
23	100-2209	1	O-Ring
24	100-2003	3	Gasket-Pump, Oil
25	98-7654	3	Gasket
26	100-2208	1	O-Ring
27	100-2207	1	O-Ring
28	110-9715	3	Gasket-Pan, Oil
29	105-3776	1	O-Ring
30	98-9636	1	Gasket-Pump, Fuel
31	100-1962	1	Gasket-Plate, Control

Attachments and Accessories

For 74279TE Z580-D Z Master With 52 Rear Discharge Mower

Product Name	Model/Part
Blade-Recycler, 18 inch	105-7779-03
Blade-Hi Flow, 18 Inch	105-7781-03
Blade-Med Flow, 18 inch	105-7794-03
Blade-Low Flow, 18 inch	105-7795-03
Blade-Atomic, 18 inch	105-7796-03
Light Kit	107-9880
Blade-Hi Flow, 18 inch (6 Pack)	108-1117
Blade-Atomic, 18 inch (6 Pack)	108-1118
Blade-Lo Flow, 18 inch (6 Pack)	110-0406
Blade-Recycler, 18 inch (6 Pack)	110-0408
Blade-Med Flow, 18 inch (6 Pack)	110-0409
Hypr-Oil 500 (quart)	114-4713
Hypr-Oil 500 (gallon)	114-4714
Hypr-Oil 500-5 (5 gallon)	114-4715
Bimini Folding Shade Assembly	115-4510
Filter Minder Gauge	99-4664
Hitch Kit	99-8925

Notes:

TORO®

Count on it.