Form No. 3369-202 Rev A

TORO®

Count on it.

Operator's Manual

Operator Fan Kit - US Sales Only

For Select Commercial Grounds and Golf Products Only

Model No. 110-1996

Model No. 110-8804

Introduction

Read this information carefully to learn how to operate and maintain your product properly and to avoid injury and product damage. You are responsible for operating the product properly and safely.

You may contact Toro directly at www.Toro.com for product and accessory information, help finding a dealer, or to register your product.

Whenever you need service, genuine Toro parts, or additional information, contact an Authorized Service Dealer or Toro Customer Service and have the model and serial numbers of your product ready.

This manual identifies potential hazards and has safety messages identified by the safety alert symbol (Figure 1), which signals a hazard that may cause serious injury or death if you do not follow the recommended precautions.



Figure 1

1. Safety alert symbol

This manual uses 2 other words to highlight information. **Important** calls attention to special mechanical information and **Note** emphasizes general information worthy of special attention.

This attachment complies with Canadian ICES-002.

Contents

Introduction 2
Safety 2
    Safety and Instructional Decals 3
Setup 4
    1 Installing the Fan Assembly 4
    2 Connecting the Fan to the Battery 5
Operation 6
    Turning on the Fan 6
    Running the Fan 6
    Transporting with a Foldable ROPS 6
Maintenance 7
    Cleaning the Fan Screen 7
Storage 7
Troubleshooting 8

Safety

The following list contains safety information specific to Toro products and other safety information you must know.

- Become familiar with the safe operation of the equipment, with the operator controls, and safety signs.
- Use extra care with attachments. These can change the operating characteristics and the stability of the machine.
- Keep hands and feet away from moving parts. Do not make adjustments with the engine running.
- Slow down and use extra care on hillsides. Be sure to travel in the recommended direction on hillsides. Turf conditions can affect the machine's stability. Use extreme caution while operating near drop-offs.
- Keep all movement on slopes slow and gradual. Do not make sudden changes in speed, directions or turning.
- Use care when loading or unloading the machine into a trailer or truck.
- Stop on level ground, disengage drives, set the parking brake, shut off engine before leaving the operator's position for any reason.

© 2011—The Toro® Company
8111 Lyndale Avenue South
Bloomington, MN 55420

Contact us at www.Toro.com.
Printed in the USA.
All Rights Reserved

Safety and Instructional Decals

Safety decals and instructions are easily visible to the operator and are located near any area of potential danger. Replace any decal that is damaged or lost.

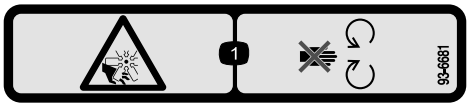

93–6681

1. Cutting/dismemberment hazard—stay away from moving parts.

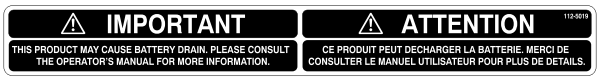

112-5019

Setup

Loose Parts

Use the chart below to verify that all parts have been shipped.

Procedure	Description	Qty.	Use
1	Fan assembly U-bolt Locknut (3/8 inch) U-bolt plate	1 2 4 2	Install the fan assembly.
2	Fuse holder Ring terminal Splice connector Fuse, 20 amp Cable ties	1 2 1 1 4	Install the fan to the battery.

Note: Determine the left and right sides of the machine from the normal operating position.

1

Installing the Fan Assembly

Parts needed for this procedure:

1	Fan assembly
2	U-bolt
4	Locknut (3/8 inch)
2	U-bolt plate

Procedure

1. Disengage the PTO and set the parking brake.
2. Stop the engine, remove the key, and wait for all moving parts to stop before leaving the operating position.
3. Remove the plastic tie holding the switch to the fan screen.
4. Remove the knob, flange nut and small washer from the switch (Figure 2).
5. Install the switch post into the screen and secure the switch with the small washer, flange nut, and knob (Figure 2).

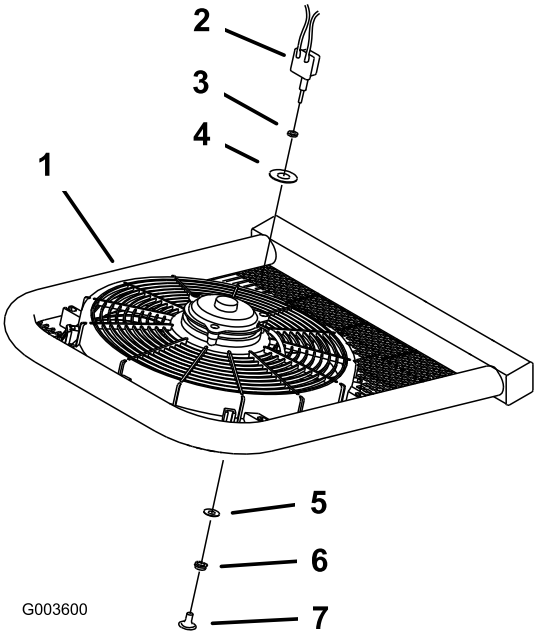

Figure 2

1. Fan and frame assembly
2. Switch
3. Switch nut
4. Large washer
5. Small washer
6. Flange nut
7. Knob

6. Install the fan frame on top of the ROPS with 2 U-bolts, 2 U-bolt plates, and 2 locknuts (3/8 inch) (Figure 3).

   Note: Make sure the U-bolts are installed as shown in Figure 3.

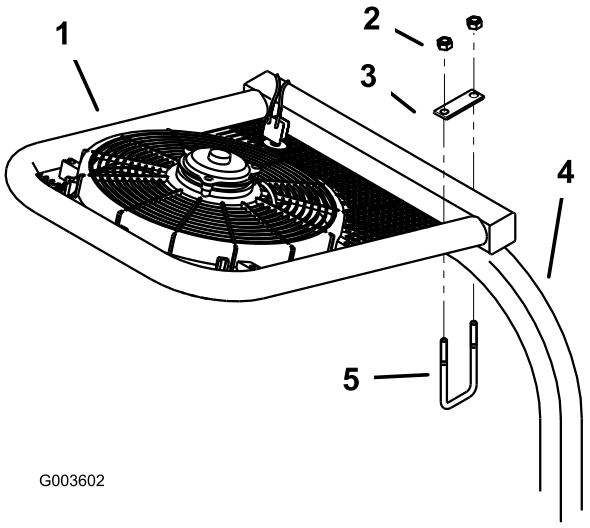

Figure 3

1. Fan and frame assembly
2. Locknut (3/8 inch)
3. U-bolt plate
4. 2 inch ROPS frame
5. U-bolt

2

Connecting the Fan to the Battery

Parts needed for this procedure:

1	Fuse holder
2	Ring terminal
1	Splice connector
1	Fuse, 20 amp
4	Cable ties

Procedure

1. Install the black wire to the fuse holder with a splice connector (Figure 4).
2. Install the ring terminal to the end of the fuse holder and the white wire (Figure 4).
3. Install the white wire to the negative battery terminal and install the fuse holder to the positive battery terminal (Figure 4).
4. Route the electrical wire to the battery along the machine frame and the ROPS frame. Make sure the electrical wire does not interfere with any moving parts.
5. Install the fuse into the fuse holder (Figure 4).

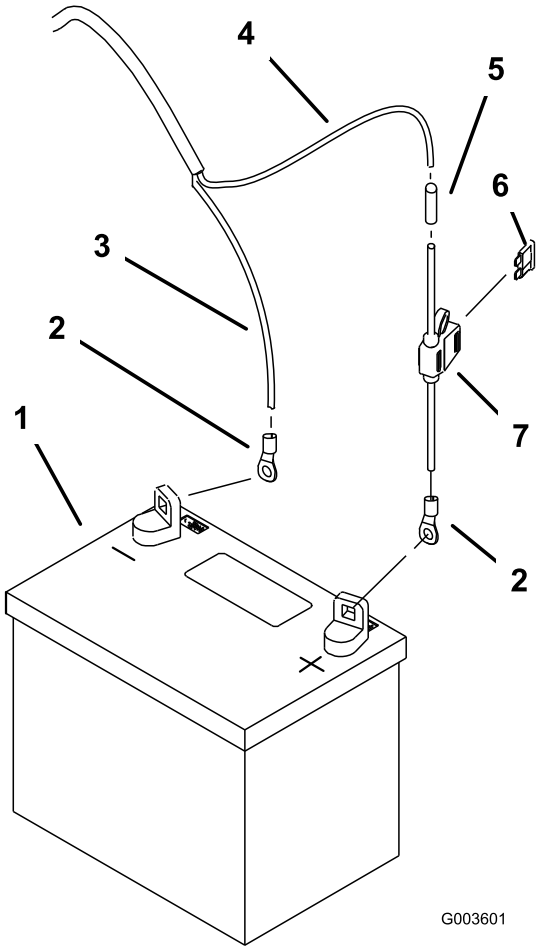

Figure 4

1. Battery with bolts in the posts
2. Ring terminal
3. White wire
4. Black wire
5. Splice connector
6. Fuse, 20 amp
7. Fuse holder

6. Install the white wire ring terminal to the negative post on the battery (Figure 4).
7. Install the fuse holder ring terminal to the positive post on the battery (Figure 4).
8. Install the electrical wire to the machine frame and ROPS frame with the 4 cable ties. Make sure the electrical wire does not interfere with any moving parts.
9. Install the boot over the positive post on the battery.

Operation

Note: Determine the left and right sides of the machine from the normal operating position.

⚠ WARNING

To avoid personal injury, follow these procedures:

- **Become familiar with all operating and safety instructions in the operator's manual for your mower before using this attachment.**
- **Always shut the engine off and wait for all moving parts to stop before clearing an obstruction from the fan.**
- **Never do maintenance or repairs while the engine or the fan are running.**

Turning on the Fan

Pull the switch down to turn the fan on and push it up to turn it off (Figure 5).

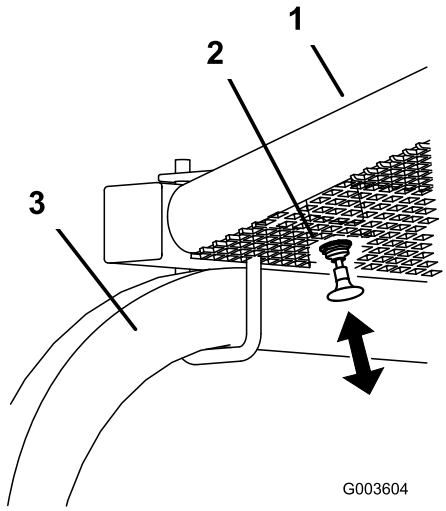

Figure 5

1. Frame
2. Switch
3. ROPS

Running the Fan

- Turn the fan off when the machine is turned off.
- Run the fan no more than 1 hour straight at a time. This will prevent the battery from being fully discharged.
- The fan can be turned on and off during mowing. Make sure the total run time does not exceed more than the half of the mowing time.
- Run the fan no more than half of the mowing time on a job. For example, if a mowing job will take 2 hours to mow, do not use the fan more than 1 hour.

⚠ WARNING

Running the fan continuously for more than 1 hour will discharge the battery. The battery discharge may prevent the machine from starting again or cause engine problems.

- **Do not use the fan for more than 1 hour straight at a time.**
- **Do not use the fan for more than half of your mowing time on a job.**
- **Turn the fan off when the machine is turned off.**

Transporting with a Foldable ROPS

Do not fold the ROPS when transporting the machine on an open trailer with the Operator Fan Kit installed. This will prevent the fan from turning rapidly while transporting.

Maintenance

Cleaning the Fan Screen

The screen needs to be cleaned before each use.

1. Disengage the power take off (PTO) and set the parking brake.
2. Turn off the engine, remove the key, and wait for all moving parts to stop before leaving the operating position.
3. Clean the debris from the screen.
4. Keep the U-bolts tight.

Storage

1. Clean the attachment. Refer to Cleaning the Fan Screen.
2. Inspect the attachment for damage.
3. Store the machine in a clean, dry place, out of direct sunlight. If you must store the machine outside, cover it with a weatherproof cover. This protects the plastic parts and extends the life of the machine.

Troubleshooting

Problem	Possible Cause	Corrective Action
Abnormal vibration.	1. Fan mounting bolts are loose. 2. Blower fan blade(s) is/are bent or unbalanced.	1. Tighten the fan mounting bolts. 2. Contact an Authorized Service Dealer.
Fan does not run.	1. Electrical connections are loose. 2. The battery is discharged. 3. The fuse is blown.	1. Tighten the electrical connections. 2. Recharge the battery. 3. Check the fuse and replace it if needed.

Notes:

Notes:

Notes:

The Toro Total Coverage Guarantee

A Limited Warranty

Conditions and Products Covered

The Toro® Company and its affiliate, Toro Warranty Company, pursuant to an agreement between them, jointly warrant your Toro Commercial product ("Product") to be free from defects in materials or workmanship for two years or 1500 operational hours*, whichever occurs first. This warranty is applicable to all products with the exception of Aerators (refer to separate warranty statements for these products). Where a warrantable condition exists, we will repair the Product at no cost to you including diagnostics, labor, parts, and transportation. This warranty begins on the date the Product is delivered to the original retail purchaser.
* Product equipped with an hour meter.

Instructions for Obtaining Warranty Service

You are responsible for notifying the Commercial Products Distributor or Authorized Commercial Products Dealer from whom you purchased the Product as soon as you believe a warrantable condition exists. If you need help locating a Commercial Products Distributor or Authorized Dealer, or if you have questions regarding your warranty rights or responsibilities, you may contact us at:

Commercial Products Service Department
Toro Warranty Company
8111 Lyndale Avenue South
Bloomington, MN 55420-1196
E-mail: commercial.warranty@toro.com

Owner Responsibilities

As the Product owner, you are responsible for required maintenance and adjustments stated in your Operator's Manual. Failure to perform required maintenance and adjustments can be grounds for disallowing a warranty claim.

Items and Conditions Not Covered

Not all product failures or malfunctions that occur during the warranty period are defects in materials or workmanship. This warranty does not cover the following:

- Product failures which result from the use of non-Toro replacement parts, or from installation and use of add-on, or modified non-Toro branded accessories and products. A separate warranty may be provided by the manufacturer of these items.
- Product failures which result from failure to perform recommended maintenance and/or adjustments. Failure to properly maintain your Toro product per the Recommended Maintenance listed in the *Operator's Manual* can result in claims for warranty being denied.
- Product failures which result from operating the Product in an abusive, negligent or reckless manner.
- Parts subject to consumption through use unless found to be defective. Examples of parts which are consumed, or used up, during normal Product operation include, but are not limited to, brakes pads and linings, clutch linings, blades, reels, bed knives, tines, spark plugs, castor wheels, tires, filters, belts, and certain sprayer components such as diaphragms, nozzles, and check valves, etc.
- Failures caused by outside influence. Items considered to be outside influence include, but are not limited to, weather, storage practices, contamination, use of unapproved coolants, lubricants, additives, fertilizers, water, or chemicals, etc.
- Normal noise, vibration, wear and tear, and deterioration.
- Normal "wear and tear" includes, but is not limited to, damage to seats due to wear or abrasion, worn painted surfaces, scratched decals or windows, etc.

Parts

Parts scheduled for replacement as required maintenance are warranted for the period of time up to the scheduled replacement time for that part. Parts replaced under this warranty are covered for the duration of the original product warranty and become the property of Toro. Toro will make the final decision whether to repair any existing part or assembly or replace it. Toro may use remanufactured parts for warranty repairs.

Note Regarding Deep Cycle Battery Warranty:

Deep cycle batteries have a specified total number of kilowatt-hours they can deliver during their lifetime. Operating, recharging, and maintenance techniques can extend or reduce total battery life. As the batteries in this product are consumed, the amount of useful work between charging intervals will slowly decrease until the battery is completely worn out. Replacement of worn out batteries, due to normal consumption, is the responsibility of the product owner. Battery replacement may be required during the normal product warranty period at owner's expense.

Maintenance is at Owner's Expense

Engine tune-up, lubrication cleaning and polishing, replacement of Items and Conditions Not Covered filters, coolant, and completing Recommended Maintenance are some of the normal services Toro products require that are at the owner's expense.

General Conditions

Repair by an Authorized Toro Distributor or Dealer is your sole remedy under this warranty.

Neither The Toro Company nor Toro Warranty Company is liable for indirect, incidental or consequential damages in connection with the use of the Toro Products covered by this warranty, including any cost or expense of providing substitute equipment or service during reasonable periods of malfunction or non-use pending completion of repairs under this warranty. Except for the Emissions warranty referenced below, if applicable, there is no other express warranty.

All implied warranties of merchantability and fitness for use are limited to the duration of this express warranty. Some states do not allow exclusions of incidental or consequential damages, or limitations on how long an implied warranty lasts, so the above exclusions and limitations may not apply to you.

This warranty gives you specific legal rights, and you may also have other rights which vary from state to state.

Note regarding engine warranty:

The Emissions Control System on your Product may be covered by a separate warranty meeting requirements established by the U.S. Environmental Protection Agency (EPA) and/or the California Air Resources Board (CARB). The hour limitations set forth above do not apply to the Emissions Control System Warranty. Refer to the Engine Emission Control Warranty Statement printed in your *Operator's Manual* or contained in the engine manufacturer's documentation for details

Countries Other than the United States or Canada

Customers who have purchased Toro products exported from the United States or Canada should contact their Toro Distributor (Dealer) to obtain guarantee policies for your country, province, or state. If for any reason you are dissatisfied with your Distributor's service or have difficulty obtaining guarantee information, contact the Toro importer. If all other remedies fail, you may contact us at Toro Warranty Company.