Form No. 3369-257 Rev A

Heavy-Duty DPA MVP Kit

22-, 27- and 32-inch DPA Cutting Units for Reelmaster 3100 Series, 5010 Series, 6500/6700 Series and 7000 Series Traction Unit

Model No. 120-7230

Installation Instructions

Loose Parts

Use the chart below to verify that all parts have been shipped.

Description	Qty.	Use
No parts required	–	Remove the old bedbar adjusters
Shaft adjuster	2	Install the new bedbar adjusters
Wave washer	2	
Flange bushing	4	
Flat washer	2	
Lock nut	2	
Bedbar adjuster screw	2	
Hardened washer	2	
Compression spring	2	
Spring tension nut	2	

Media and Additional Parts

Description	Qty.	Use
Installation instructions	1	Use to install kit
Parts catalog	1	Reference part numbers

Removing the Old Bedbar Adjusters

1. Park the machine on a level surface, lower the cutting units, apply the parking brake, switch off the engine and remove the ignition key.
2. Turn the bedbar adjusting screws, counterclockwise, to back the bedknife away from the reel (Figure 1).

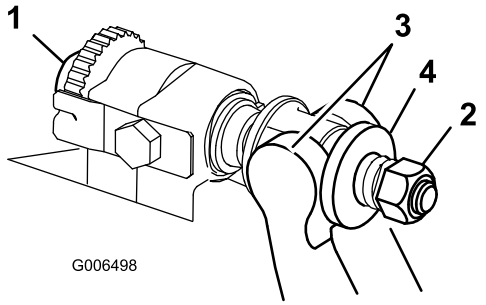

Figure 1

1. Bed bar adjusting screw
2. Spring tension nut
3. Bedbar
4. Washer

3. Back out the spring tension nut, until the washer is no longer tensioned against the bedbar (Figure 1).
4. Remove the spring tension nut, compression spring and washer from bedbar adjuster screw (Figure 4).
5. On each side of the machine, loosen the lock nut securing the bedbar bolt (Figure 2).

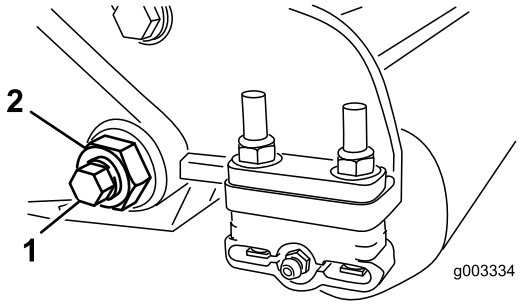

Figure 2

1. Bedbar bolt
2. Lock nut

6. Remove each bedbar bolt allowing bedbar to be pulled downward and removed from machine bolt

© 2011—The Toro® Company
8111 Lyndale Avenue South
Bloomington, MN 55420

Original Instructions (EN)
Printed in the USA.
All Rights Reserved

(Figure 2). Account for 2 nylon and 1 stamped steel washers on each end of bedbar (Figure 3).

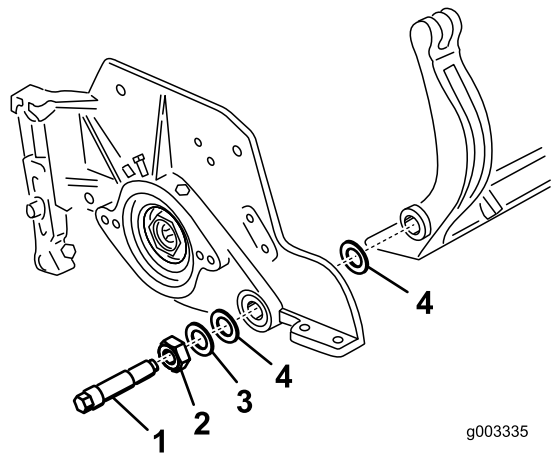

Figure 3

1. Bedbar bolt
2. Nut
3. Steel washer
4. Nylon washer

7. Unscrew bedbar adjuster shaft from the bedbar adjuster screw (Figure 4). The bedbar adjuster shaft has left-hand threads.
8. Remove the retaining ring and wave washer from the adjuster shaft and remove the adjuster shaft from the cutting unit frame (Figure 4).
9. Remove the flange bushings from the cutting unit center frame (Figure 4).
10. Repeat the procedure on the other end of the cutting unit.

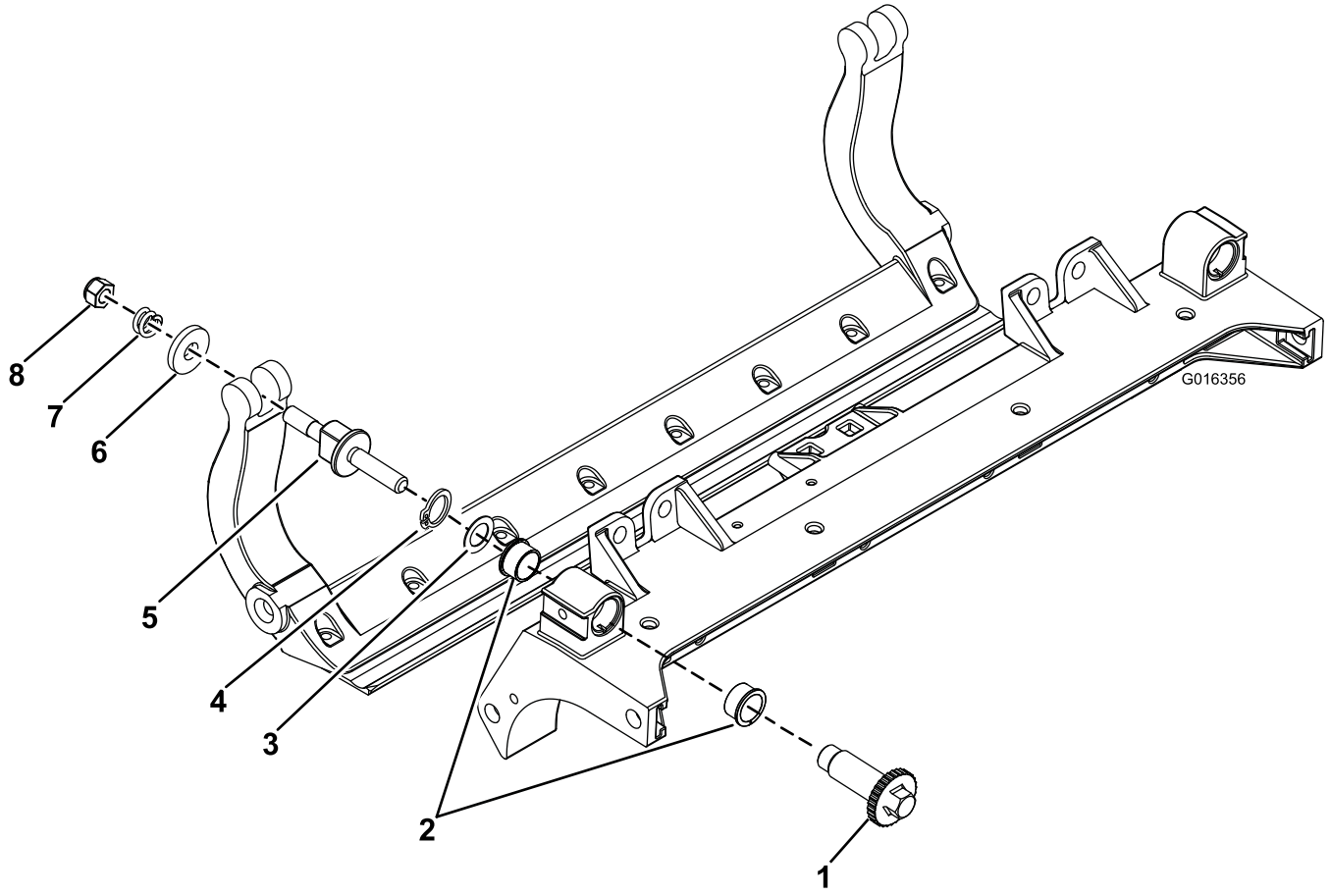

Figure 4

1. Shaft adjuster
2. Flange bushing
3. Wave washer
4. Retaining ring
5. Bedbar adjuster screw
6. Washer
7. Compression spring
8. Spring tension nut

Installing the New Bedbar Adjusters

1. Thoroughly clean inside the casting area where the bushings were removed.
2. Apply Never Seize to the inside of the bushing area on cutting unit center frame (Figure 5).
3. Align the keys on flange bushings to the slots in the frame and install the bushings (Figure 5).
4. Install a wave washer onto the adjuster shaft and slide the adjuster shaft into the flange bushings in the cutting unit frame (Figure 5).
5. Secure the adjuster shaft with a flat washer and lock nut (Figure 5). Torque the lock nut to 15 to 20 ft-lb (20 to 27 N-m).

   Note: The bedbar adjuster shaft has left-hand threads.
6. Apply Never Seize lubricant to the threads of the bedbar adjuster screw that fit into the adjuster shaft. Thread bedbar adjuster screw into the adjuster shaft.
7. Loosely install the hardened washer, spring and spring tension nut onto adjuster screw.
8. Install the bedbar, positioning the mounting ears between washer and bedbar adjuster.
9. Secure the bedbar to each side plate with the bedbar bolts (nuts on bolts) and 6 washers. A nylon washer is to be positioned on each side of side plate boss. Place a steel washer outside each of the nylon washers (Figure 3). Torque bedbar bolts to 27-33 ft.-lb (37-45 N-m). Tighten locknuts until the outside steel washer stops rotating and end play is removed but do not overtighten or deflect side plates. Washers on inside may have a gap.
10. Tighten the nut on each bedbar adjuster assembly until the compression spring is fully compressed, then loosen nut 1/2 turn.
11. Repeat the procedure on the other end of the cutting unit.
12. Adjust the bedknife to the reel per the instructions in the *Cutting Unit Operator's Manual*

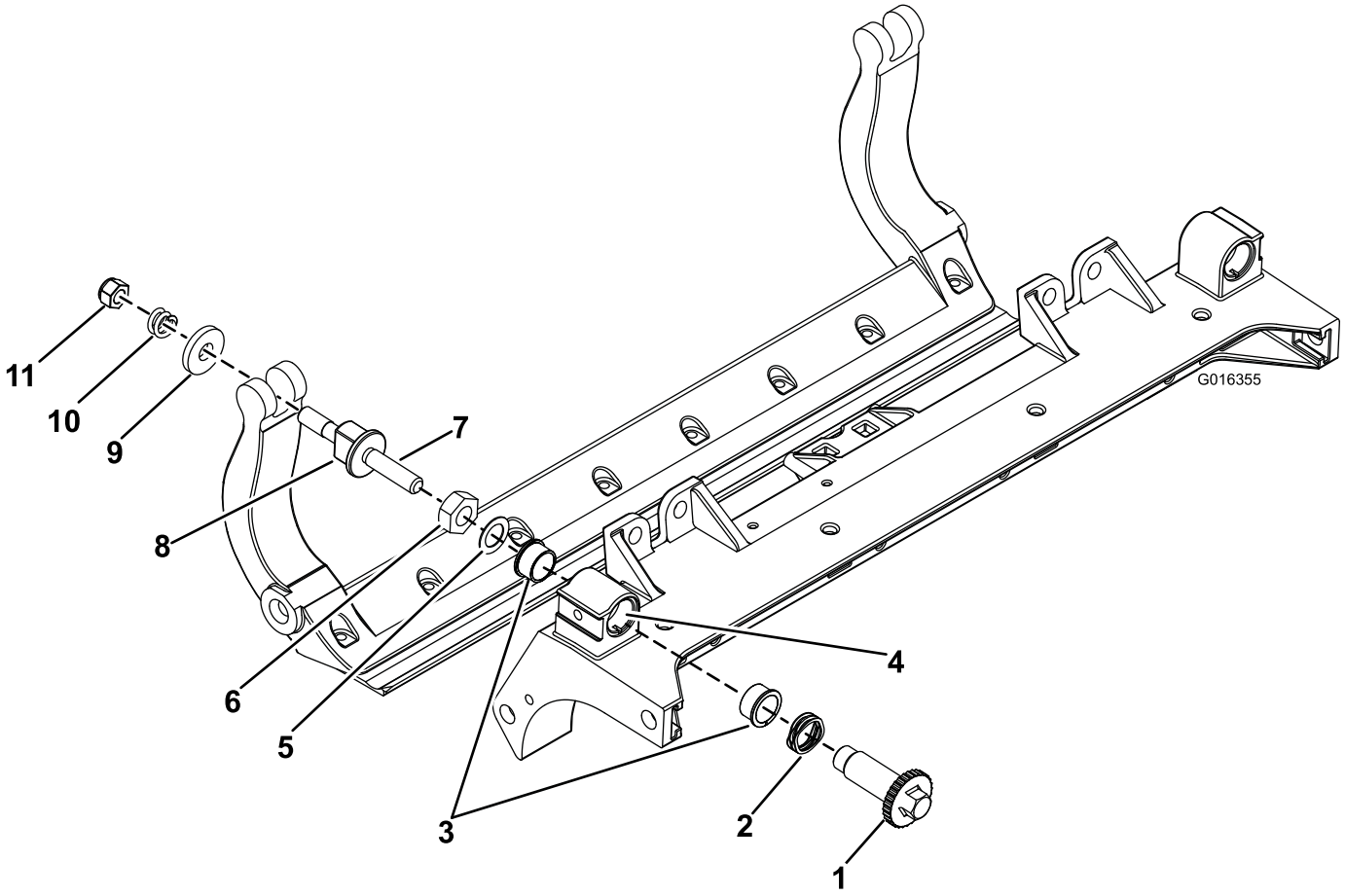

Figure 5

1. Shaft adjuster
2. Wave washer
3. Flange bushing
4. Apply Never Seize here
5. Flat washer
6. Lock nut
7. Apply Never Seize here
8. Bedbar adjuster screw
9. Hardened washer
10. Compression spring
11. Spring tension nut



Count on it.