Form No. 3367-223 Rev B

Count on it.

Parts Catalog

Groundsmaster® 7210 Traction Unit with 72in Side Discharge Mower

Model No. 30363TC—Serial No. 311000001 and Up

Register at www.Toro.com.

Original Instructions (EN)

Ordering Replacement Parts

To order replacement parts, please supply the part number, the quantity, and the description of each part desired.

Understanding Reference Numbers

Each identified part in an illustration has a reference number. The reference number for a part also appears in the parts list, along with other information about the part.

This catalog uses two special reference number formats, one to indicate parts in a service assembly and another to indicate the quantity of a given part in an illustration.

Service Assembly Reference Numbers

Parts in service assemblies have reference numbers in the form a:b. The a represents the reference number of the entire service assembly and the b represents a sequential number unique to each part within the service assembly.

For example, a wheel assembly might be identified by reference number 6, the tire by 6:1, the valve by 6:2, and the wheel by 6:3. When you order the assembly identified by reference number 6, you receive all parts identified by reference numbers 6:1,6:2, and 6:3. However, you may also order any part individually. Reference numbers of this type appear in illustration and in parts lists.

Reference Numbers Indicating Quantity

In an illustration, if a reference number indicates more than one part, the reference number has the form nX y. The n represents the quantity of the part, the X is the multiplication symbol, and the y represents the reference number.

For example, in an illustration, the reference number 2X 37 means that two of the parts identified by reference number 37 are indicated.

List of Abbreviations

AR: as required

ASM: assembly

BBC: blade brake control

BHTF: button head thread forming

CARR: carriage

CCW: counter clockwise

CW: clockwise

DEG: degrees

DPA: Dual Point Adjustment

ECM: electronic control module

EXT: external

FH: flat head

GA: gauge

HD: heavy-duty

HF: hex flange

HH: hex head

HHF: hex head flange

HHFTF: hex head flange thread forming

HJ: hex jam

HLH: hex lag head

HOC: height-of-cut

HSBH: hex socket button head

HSFH: hex socket flat head

HSH: hex socket head

HWH: hex washer head

HWHTF: hex washer head thread forming

HYD: hydraulic

LH: left hand

LP: Liquid Propane

NI: nylon insert

NPTF: national pipe thread fine

PFH: phillips flat head

PPH: phillips pan head

PPHTF: phillips pan head thread forming

PRH: phillips round head

PTH: phillips truss head

PTO: power-take-off

RH: right hand

ROPS: roll-over protection system

RRB: rear roller brush

SFH: slotted fillister head

SHH: slotted hex head

SHWH: slotted hex washer head

SPH: slotted pan head

SQH: square head

SRH: slotted round head

STD: standard

TAP: self tapping

TTH: torx truss head

© 2011—The Toro® Company
8111 Lyndale Avenue South
Bloomington, MN 55420

Contact us at www.Toro.com.
Printed in the USA.
All Rights Reserved

Contents

Frame Assembly . . . 5
Radiator Assembly . . . 6
Control Panel Assembly . . . 7
Transmission Assembly . . . 8
Hydraulic Gear Pump Assembly No. 112-9542 . . . 9
Charge Pump Housing Assembly Transmission Assembly No. 107-0801 . . . 10
Center Section Assembly Transmission Assembly No. 107-0801 . . . 11
Gear Case and Clutch Assembly Transmission Assembly No. 107-0801 . . . 13
Traction Control Assembly . . . 14
Engine Component Assembly . . . 16
Air Cleaner Assembly No. 104-3428 . . . 18
Engine, Muffler and Shield Assembly . . . 19
Hydraulic Assembly . . . 20
Parking Brake Assembly . . . 21
Electrical Assembly . . . 22
Hood Assembly . . . 23
Fuel Tank Assembly . . . 24
LH Fuel Tank Assembly No. 110-8230 . . . 25
RH Fuel Tank Assembly No. 110-8236 . . . 26
Seat Assembly . . . 27
Seat Assembly No. 107-2286 . . . 28
Driveshaft Assembly . . . 29
Driveshaft Assembly No. 110-3575 . . . 30
Rear Drive Assembly . . . 31
Hydraulic Motor Assembly No. 108-5230 . . . 32
Hydraulic Motor Assembly No. 108-5155 . . . 33
Carrier Frame and Valve Assembly . . . 34
Carrier Frame Kit Assembly No. 114-4087 . . . 36
Carrier Frame Assembly . . . 37
Hydraulic Cylinder Assembly No. 110-9834 . . . 38
Hydraulic Valve Assembly No. 117-9235 . . . 39
Caster Fork Assembly . . . 40
Caster Wheel Assembly No. 108-9954 . . . 41
Deck Linkage Assembly . . . 42
Roll-Over and Protection System and Rear Wheel Assembly . . . 43
Deck Spindle, Belt and Pulley Assembly . . . 44
Deck Decal Assembly No. 108-9901 . . . 45
Spindle Assembly No. 119-4778 . . . 46
High Spindle Assembly No. 117-9233 . . . 47
Double Spindle Assembly No. 117-9234 . . . 48
Roller and Baffle Assembly . . . 49
Blade Assembly . . . 50
Belt Cover, Gearbox and Baffle Assembly . . . 51
Gearbox Assembly No. 117-9245-03 . . . 52
Rubber Deflector Assembly No. 108-2792 . . . 53
Adjustment Link and Bumper Assembly . . . 54
Crankcase Assembly . . . 55
Oil Pan Assembly . . . 56
Cylinder Head Assembly . . . 57
Head Cover Assembly . . . 58
Gear Case Assembly . . . 59
Main Bearing Case Assembly . . . 60
Camshaft and Idle Gear Shaft Assembly . . . 61
Piston and Crankshaft Assembly . . . 62

Flywheel Assembly 63
Fuel Camshaft and Governor Shaft Assembly 64
Idle Apparatus Assembly 65
Injection Pump Assembly 66
Governor Assembly 67
Speed Control Plate Assembly 68
Nozzle Holder and Glow Plug Assembly 69
Nozzle Holder Assembly 70
Alternator and Pulley Assembly 71
Alternator Components Assembly 72
Starter (Component Part) Assembly No. 98-9705 73
Water Flange and Thermostat Assembly 74
Water Pump Assembly 75
Inlet and Exhaust Manifold Assembly 76
Valve and Rocker Arm Assembly 77
Turbo Charger Assembly 78
Turbo Charger Oil Pipe Assembly 79
Oil Cooler Assembly 80
Gasket Kit 81
Electric Fuel Pump, Fuel Filter, Starter and Overflow Bottle Assemblies 82
Attachments and Accessories 83

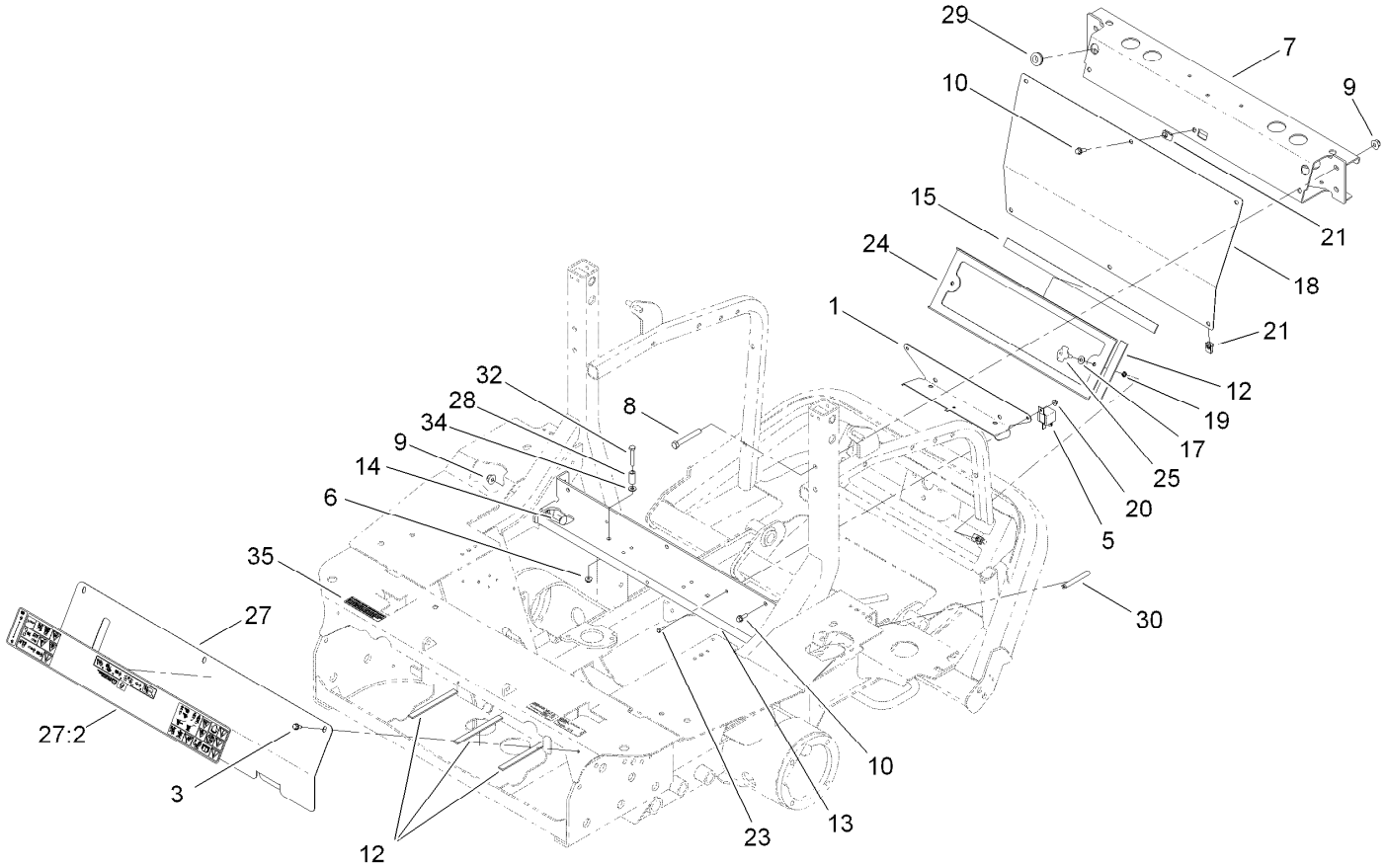

Frame Assembly

Ref.	Part Number	Qty.	Description
1	114-4055-03	1	Bracket-Wire
3	32144-10	3	Screw-HWH
5	99-7435	1	Relay-Power
6	104-7201	2	Nut-HF
7	112-6361-03	1	Crossmember ASM
8	323-13	4	Screw-HH
9	104-8301	8	Nut-Flange, NI
10	3234-4	6	Screw-HHF
12	120-0017	5	Strip-Foam
13	105-7296-03	1	Support-Seat
14	3231-2	4	Screw-CARR
15	120-0019	2	Strip-Foam
17	3256-22	2	Washer-Flat
18	112-6367-03	1	Panel-Rear

Ref.	Part Number	Qty.	Description
19	32151-106	2	Ring-Retaining
20	3290-148	2	Nut-HF
21	107069	8	Clip
23	3290-134	2	Screw
24	112-6384-03	1	Screen ASM
25	98-8332	2	Knob
27	110-9794	1	Cover-Front
27:2	110-9772	1	Decal-Safety
28	95-5807	2	Spacer
29	237-124	2	Grommet
30	110-8276	1	Trim-Hold Down, Battery
32	321-10	2	Screw-HH
34	3256-22	2	Washer-Flat
35	117-2718	1	Decal-Arrester, Spark

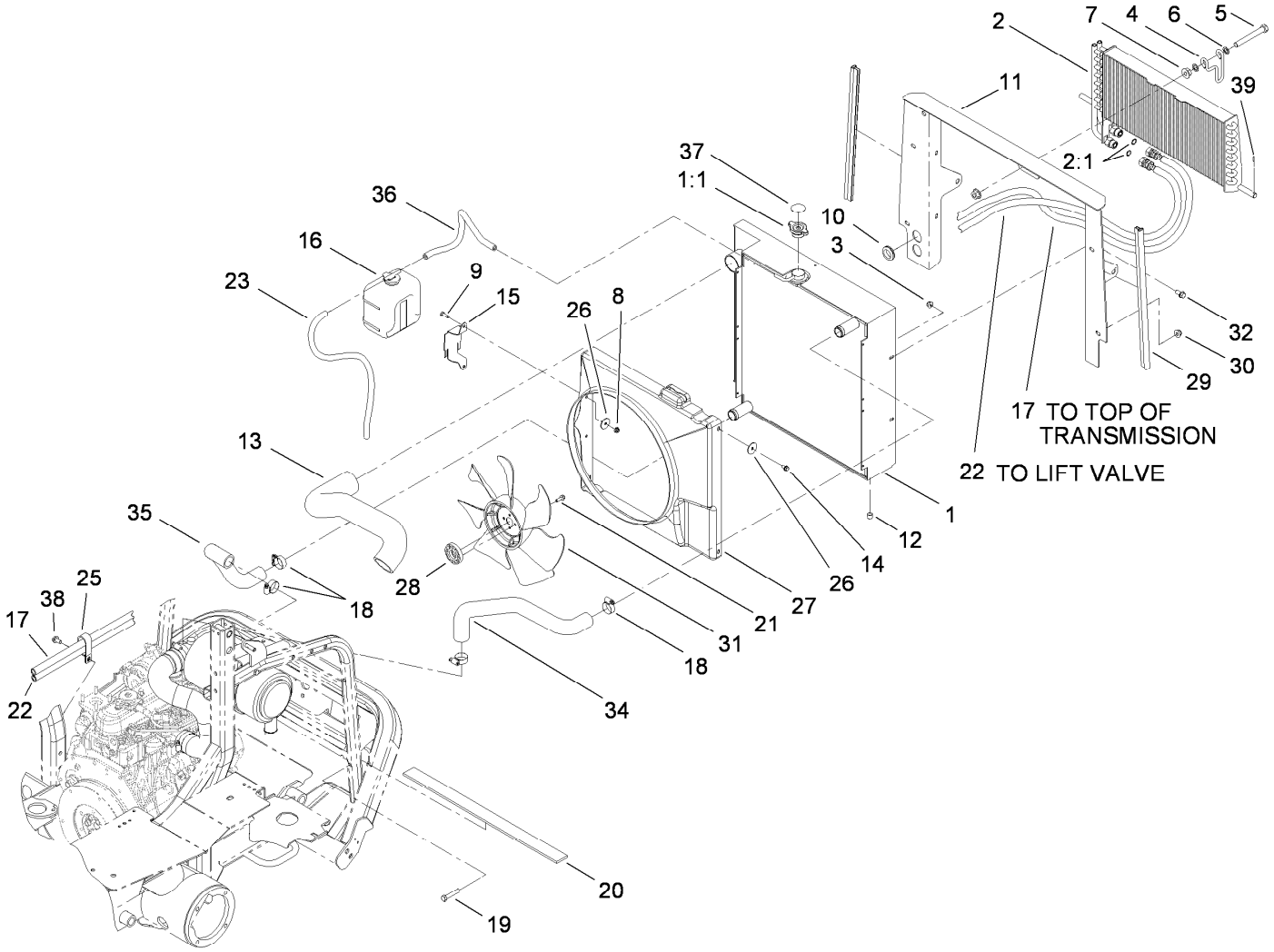

Radiator Assembly

Ref.	Part Number	Qty.	Description
1	117-5135	1	Radiator
1:1	117-5138	1	Cap-Radiator
2	112-1684	1	Cooler-Oil
2:1	237-30	2	O-Ring
3	104-8300	4	Nut-Flange, NI
4	104-5429	1	Clamp-Form, Wire
5	325-17	1	Screw-HH
6	41-8440	2	Washer
7	32128-49	2	Nut-HHF
8	104-7201	2	Nut-HF
9	321-4	2	Screw-HH
10	240-5	2	Grommet
11	110-8277-03	1	Frame-Radiator
12	99-8551	1	Plug-Pipe
13	105-7281	1	Hose-Air Inlet, Upper
14	32104-116	4	Screw
15	108-9930-03	1	Bracket-Bottle
16	108-0638	1	Bottle-Overflow
17	110-5542	1	HYD Hose ASM
18	2412-34	4	Clamp-Hose
19	323-10	4	Screw-HH
20	108-9935	1	Strip-Foam
21	33103-020	4	Screw-HHF
22	110-5543	1	HYD Hose ASM
23	108-3284	1	Hose-Fuel
25	2412-137	1	Clamp-R, Double
26	3256-55	6	Washer-Flat
27	117-9232	1	Shroud-Fan
28	108-2872	1	Collar-Fan
29	107-2269	2	Seal-Bulb
30	104-8301	4	Nut-Flange, NI
31	104-4246	1	Fan-Engine
32	3234-5	4	Screw-HHF
34	105-7282	1	Hose-Radiator, Upper
35	105-7283	1	Hose-Radiator, Lower
36	109-0274	1	Hose-Fuel
37	106-6755	1	Decal-Cap, Radiator
38	32144-14	1	Screw-HWHTF
39	32121-107	1	Pin-Roll, Slotted

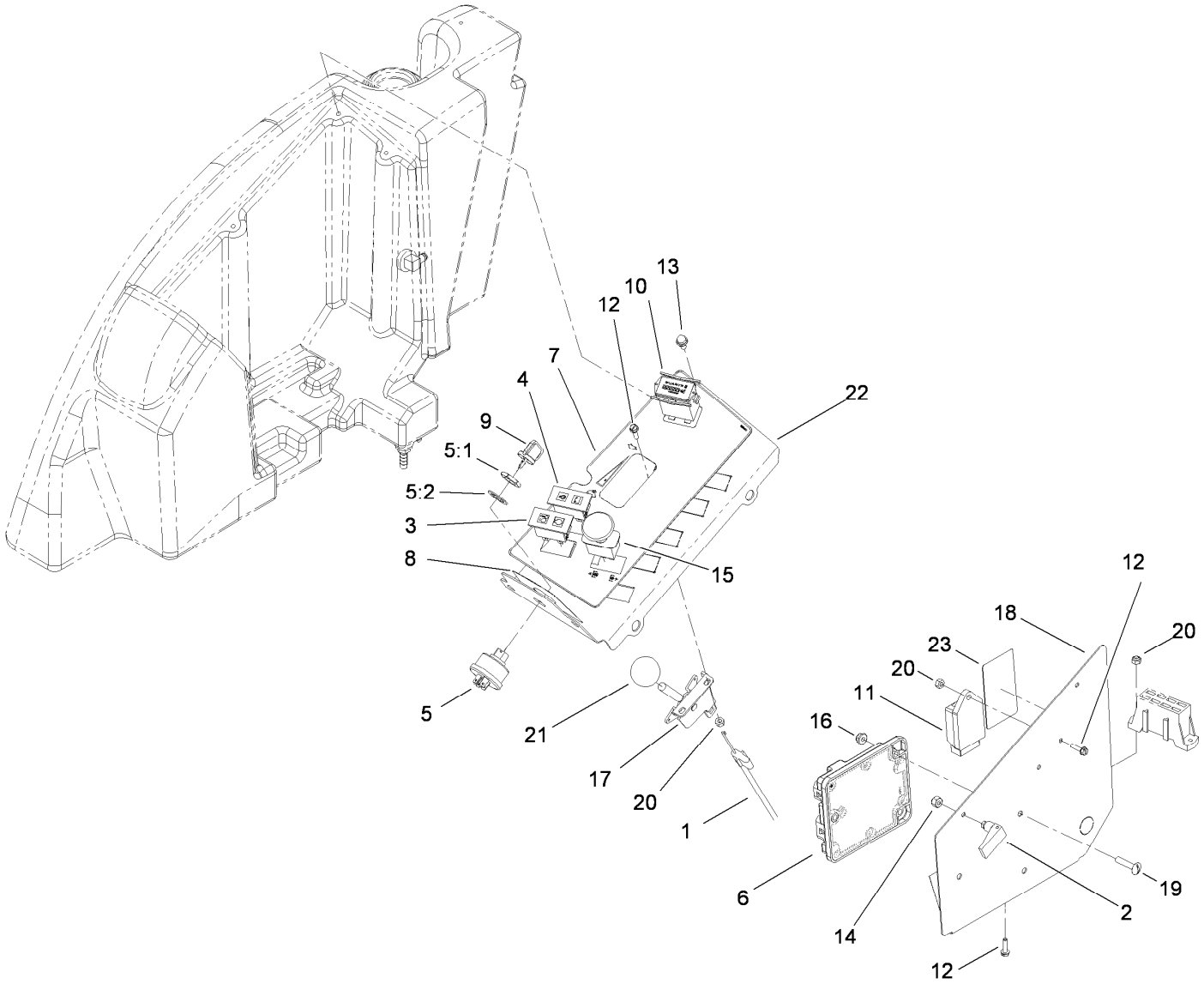

Control Panel Assembly

Ref.	Part Number	Qty.	Description
1	110-5548	1	Cable-Throttle
2	74-5950	2	Latch-Swell
3	100-8071	1	Lamp-Warning
4	100-8070	1	Lamp-Warning
5	104-2541	1	Switch ASM
5:1	218-461	1	Nut-HH
5:2	3254-5	1	Washer-Tooth, Internal
6	106-9277	1	Module-Control, Standard
7	110-8253	1	Decal-Panel, Control
8	110-8254	1	Decal-Start, Control Panel
9	63-8360	2	Key-Ignition
10	1-513374	1	Meter-Hour
11	107-9097	1	Controller-Glow

Ref.	Part Number	Qty.	Description
12	32105-13	5	Screw-HWH
13	3234-13	5	Screw-HHF
14	1-804254	2	Nut-Lock, HH
15	93-9999	1	Switch-PTO
16	104-7201	3	Nut-HF
17	110-5547	1	Control Lever ASM
18	110-8257-03	1	Cover-Panel, Control
19	3258-19	3	Screw
20	3296-2	5	Nut-Lock, NI
21	233-42	1	Knob
22	110-8256-03	1	Panel-Control
23	110-9796	1	Decal-Block, Fuse

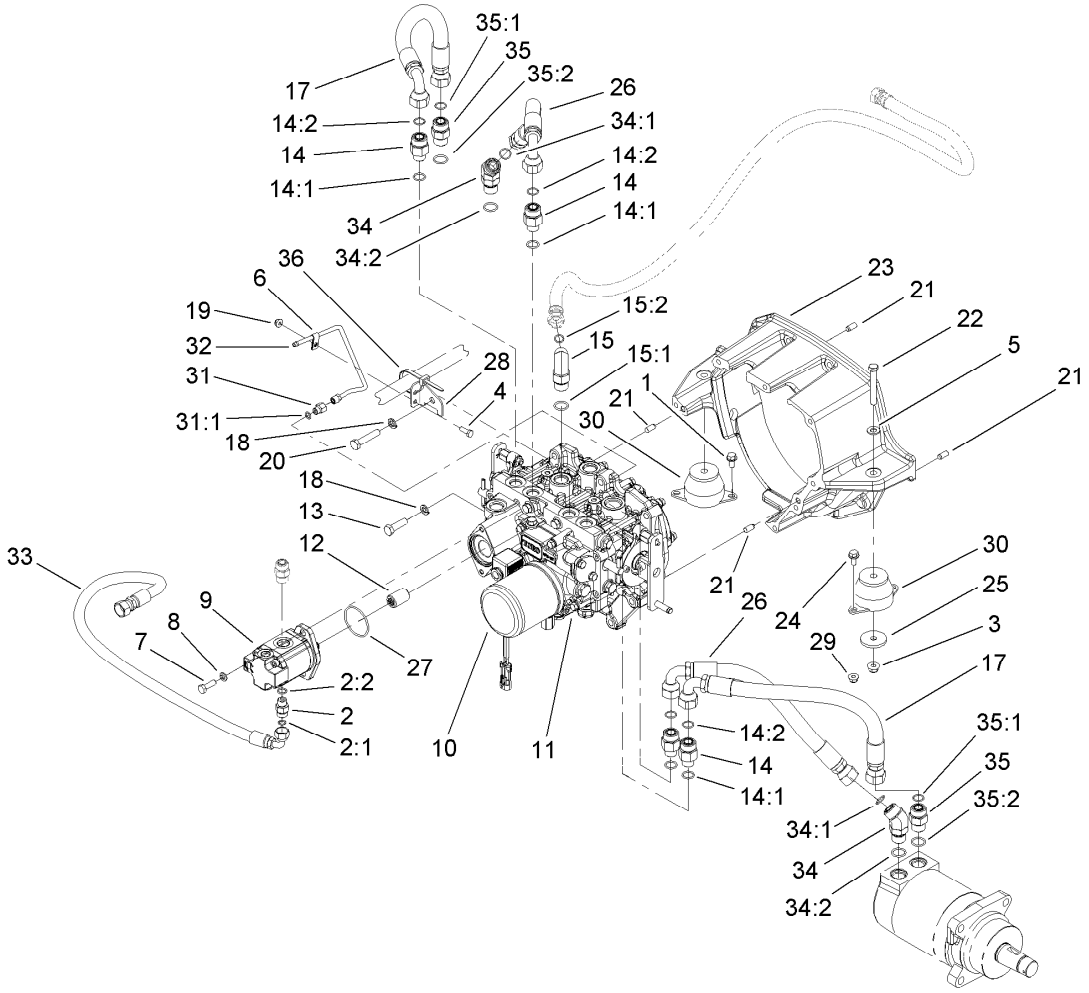

Transmission Assembly

Ref.	Part Number	Qty.	Description
1	32144-14	2	Screw-HWHTF
2	340-2	1	Fitting-HYD, Straight
2:1	237-22	1	O-Ring
2:2	237-42	1	O-Ring
3	104-8301	2	Nut-Flange, NI
4	321-4	1	Screw-HH
5	3256-24	2	Washer-Flat
6	2412-72	1	Clip-Closed, Insulated
7	33114-025	2	Screw-HH
8	3253-4	2	Washer-Lock
9	112-9542	1	Gear Pump Assembly
10	108-5194	1	Filter-Oil, HYD
11	107-0801	1	Transmission ASM
12	108-9920	1	Coupler-Spline, 9T
13	33115-035	1	Screw-HH
14	340-155	4	Fitting-HYD, Straight
14:1	237-79	1	O-Ring
14:2	237-151	1	O-Ring
15	340-105	1	Fitting-HYD, 90 DEG
15:1	237-80	1	O-Ring
15:2	237-30	1	O-Ring
17	112-1683	2	Hose ASM
18	48-9590	7	Washer-Lock

Ref.	Part Number	Qty.	Description
19	104-7201	1	Nut-HF
20	33115-050	6	Screw-HH
21	87-1910	4	Pin-Dowel
22	323-13	2	Screw-HH
23	108-5193	1	Housing-Flywheel
24	3234-17	2	Screw-HHF
25	80-8560	2	Washer-Hardened
26	110-5518	2	Hose ASM
27	108-9919	1	O-Ring
28	110-5534	1	Support-Tube
29	104-8300	2	Nut-Flange, NI
30	107-2289	2	Mount-Motor
31	110-5536	1	Fitting-HYD, Adapter
31:1	237-78	1	O-Ring
32	110-5537	1	Tube ASM
33	94-5961	1	Hose ASM
34	340-14	2	Fitting-HYD, 45 DEG
34:1	237-65	1	O-Ring
34:2	237-80	1	O-Ring
35	340-7	2	Adapter
35:1	237-65	1	O-Ring
35:2	237-80	1	O-Ring
36	3290-378	1	Tie-Cable

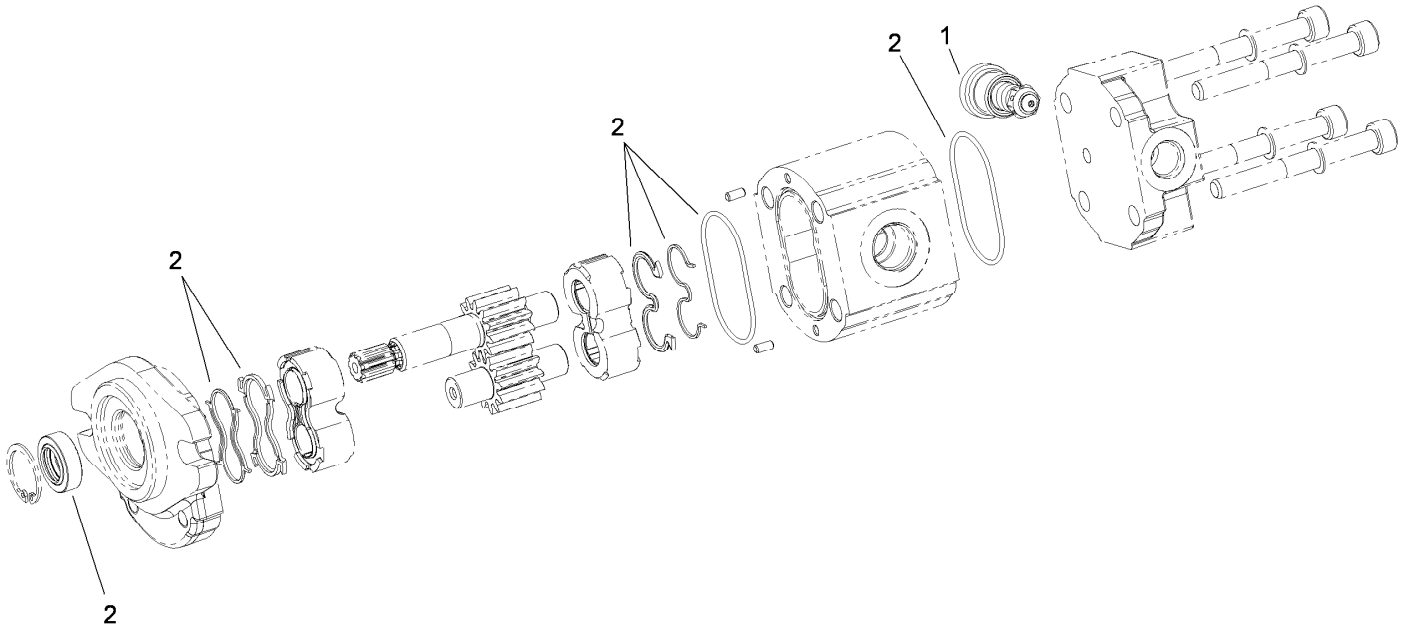

Hydraulic Gear Pump Assembly No. 112-9542

Ref.	*Part Number*	*Qty.*	*Description*
1	112-0198	1	Valve
2	112-0199	1	Seal Kit

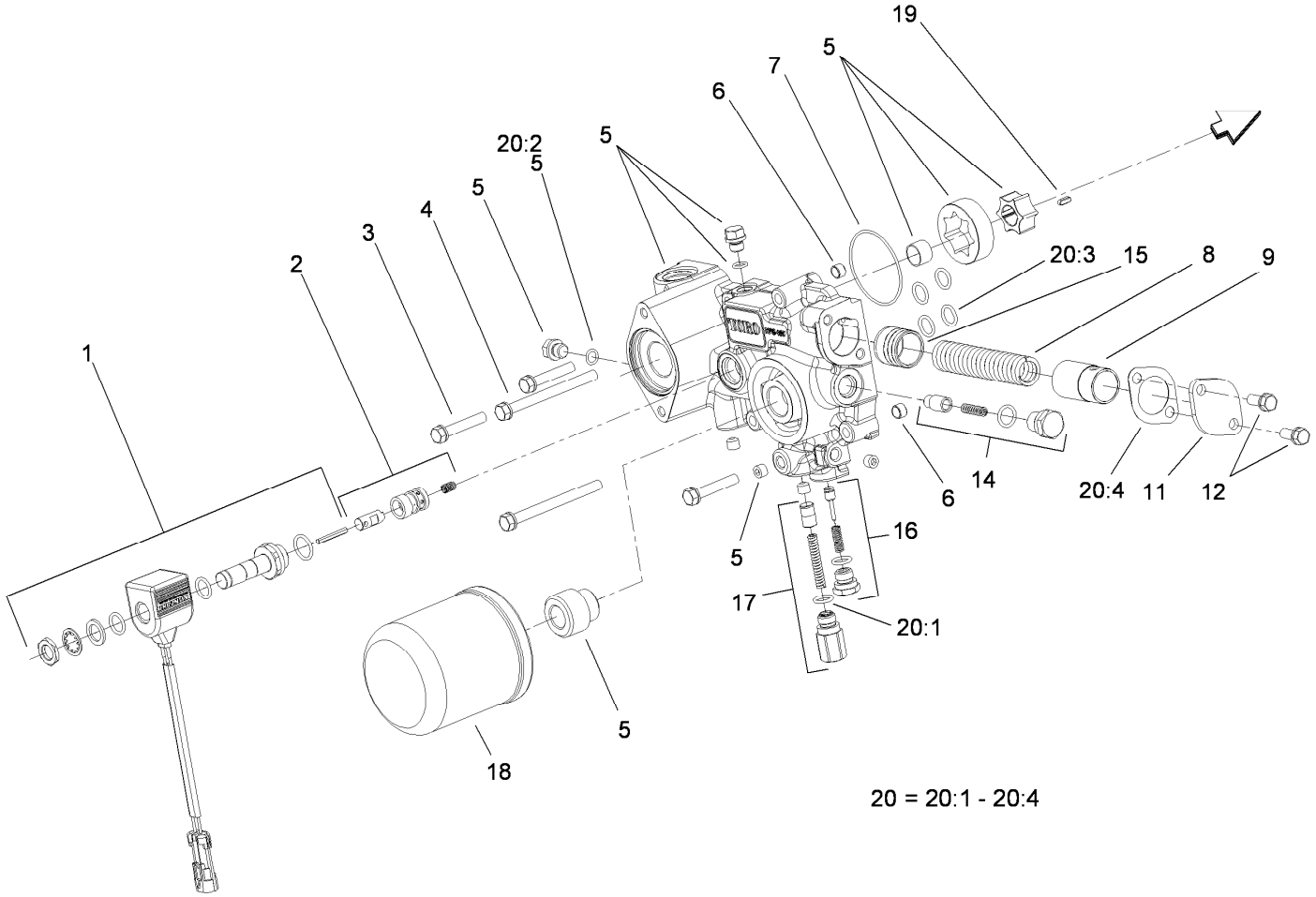

Charge Pump Housing Assembly
Transmission Assembly No. 107-0801

Ref.	Part Number	Qty.	Description
1	107-0851	1	Solenoid ASM
2	107-0850	1	Solenoid Valve ASM
3	107-0863	3	Bolt
4	107-0864	2	Bolt
5	107-0840	1	Pump Body ASM
6	107-0848	2	Pin
7	107-0856	1	O-Ring
8	107-0845	1	Spring
9	107-0844	1	Collar
11	107-0846	1	Cover
12	93-0457	2	Bolt And Washer ASM

Ref.	Part Number	Qty.	Description
14	107-0843	1	Filter Bypass Valve ASM
15	107-0818	1	Piston
16	107-0842	1	Charge Relief Valve ASM
17	107-0841	1	Pressure Valve ASM
18	108-5194	1	Filter-Oil, HYD
19	107-0865	1	Key
20	107-0855	1	Charge Pump Seal Kit
20:1	93-0418	2	O-Ring
20:2	107-0817	2	O Ring-Plug
20:3	104-3298	6	Packing
20:4	107-0847	1	Gasket

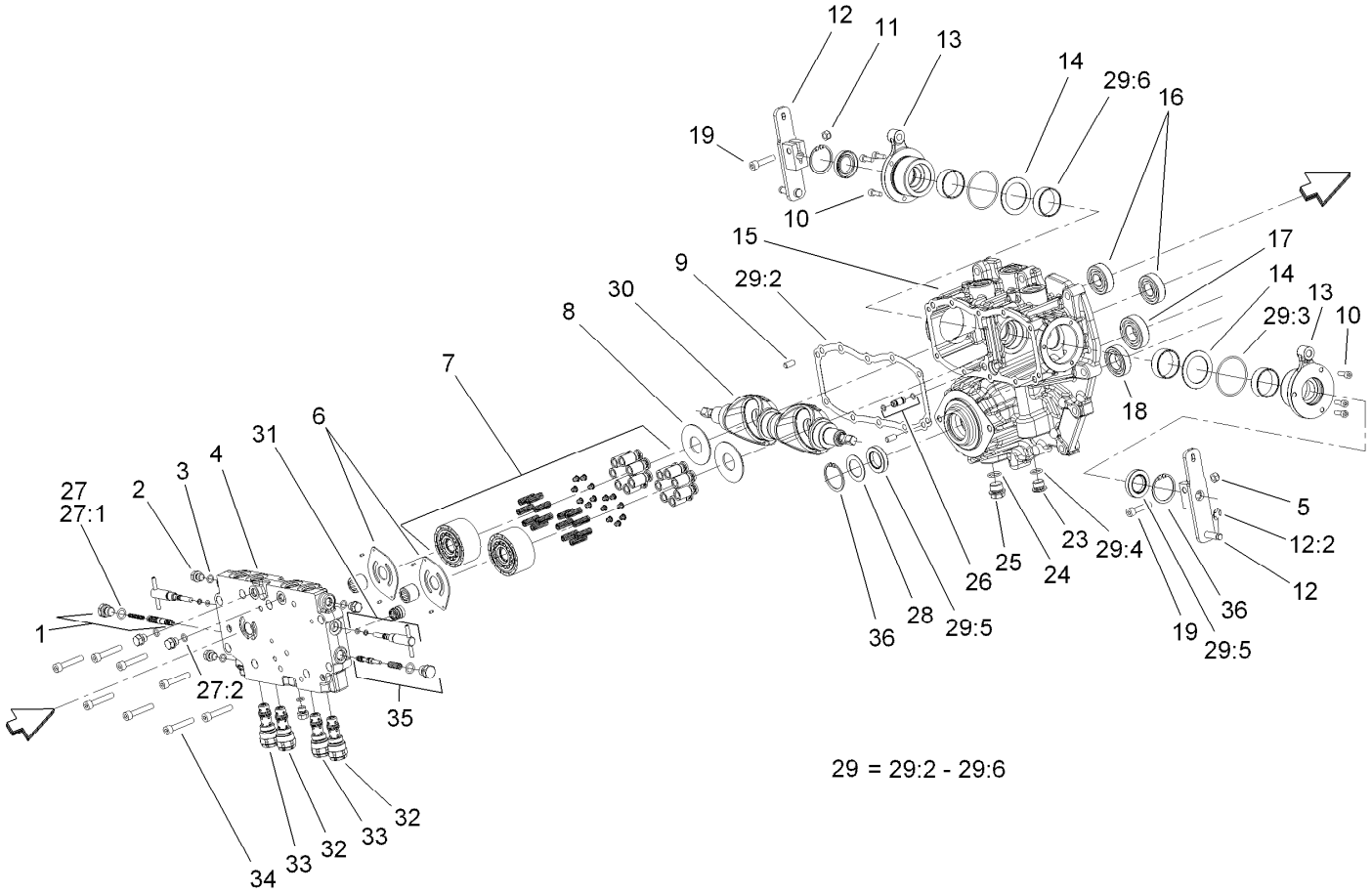

Center Section Assembly
Transmission Assembly No. 107-0801

Ref.	Part Number	Qty.	Description
1	107-0807	1	Valve-Flushing, RH
2	107-0857	6	Plug
3	107-0817	6	O Ring-Plug
4	107-0802	1	Case-Center
5	107-0858	1	U-Nut
6	107-0805	2	Plate-Valve
7	107-0824	2	Cylinder Block ASM
8	107-0830	2	Plate-Thrust
9	92-0765	4	Pin-Parallel
10	107-0859	6	Bolt
11	107-0858	2	U-Nut
12	120-0008	2	Control Arm Kit
12:2	32151-47	1	Ring-Retaining
13	107-0832	2	Side Cover ASM
14	107-0829	2	Washer
15	107-0809	1	Housing-Pump
16	107-0826	2	Bearing
17	107-0821	1	Bearing
18	107-0838	1	Bearing

Ref.	Part Number	Qty.	Description
19	107-0860	2	Bolt
23	107-0861	1	Plug-NPTF
24	107-0862	1	O-Ring
25	107-0867	1	Plug
26	107-0812	1	Pipe
27	107-0852	1	Center Case Seal Kit
27:1	93-0418	2	O-Ring
27:2	107-0817	6	O Ring-Plug
28	107-0813	1	Spacer
29	107-0853	1	Pump Housing Seal Kit
29:2	107-0810	1	Gasket-Case, Center
29:3	107-0817	2	O Ring-Plug
29:4	104-3298	1	Packing
29:5	107-0814	3	Seal
29:6	107-0825	4	Ring-Seal
30	107-0828	2	Plate-Swash
31	107-0808	2	Valve-Bypass
32	107-0804	2	Valve-Rear
33	107-0803	2	Valve-Front

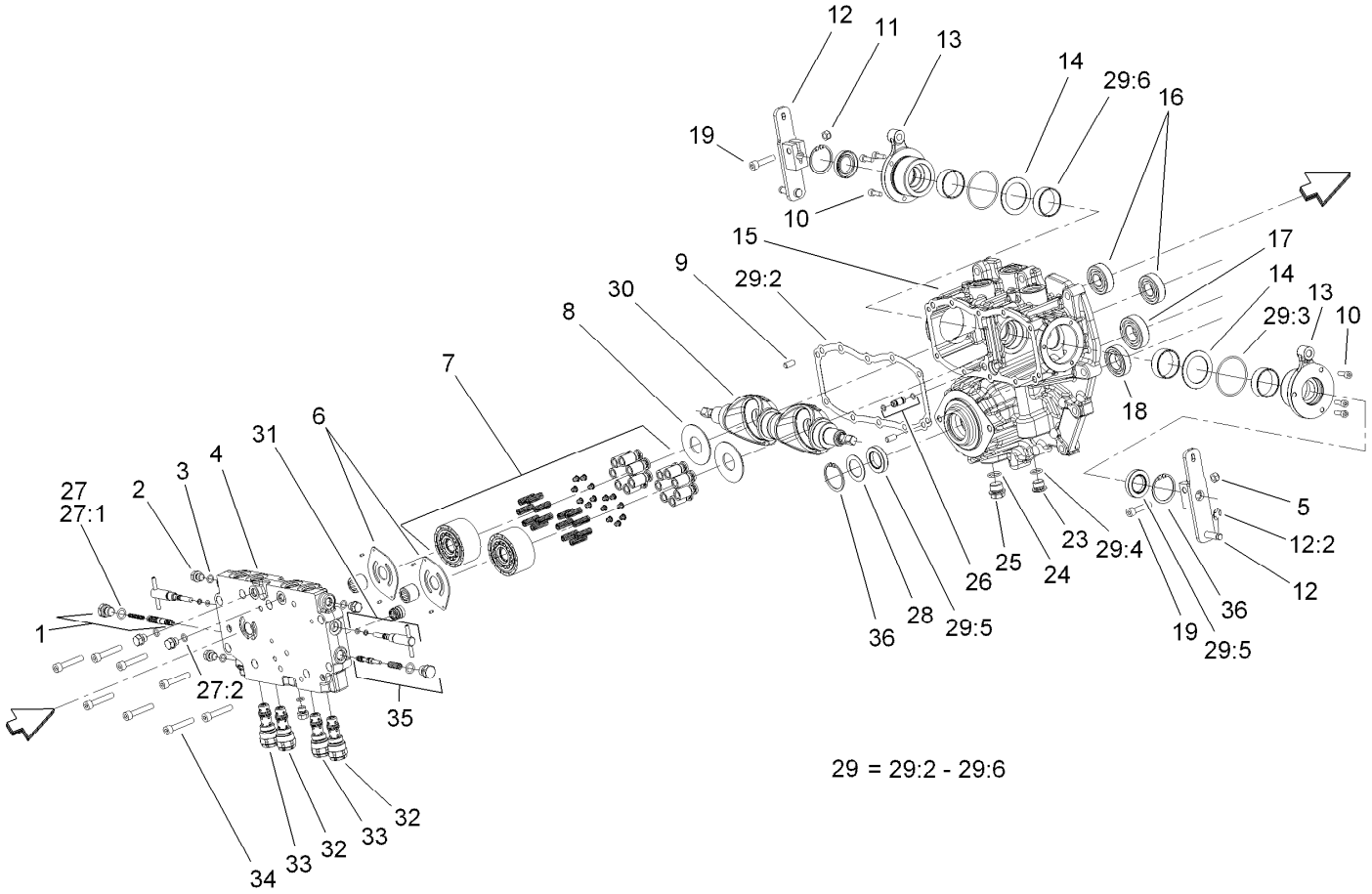

Center Section Assembly
Transmission Assembly No. 107-0801 (continued)

Ref.	Part Number	Qty.	Description
34	107-0863	8	Bolt
35	107-0806	1	Valve-Flushing, LH
36	92-0757	2	Ring-Snap

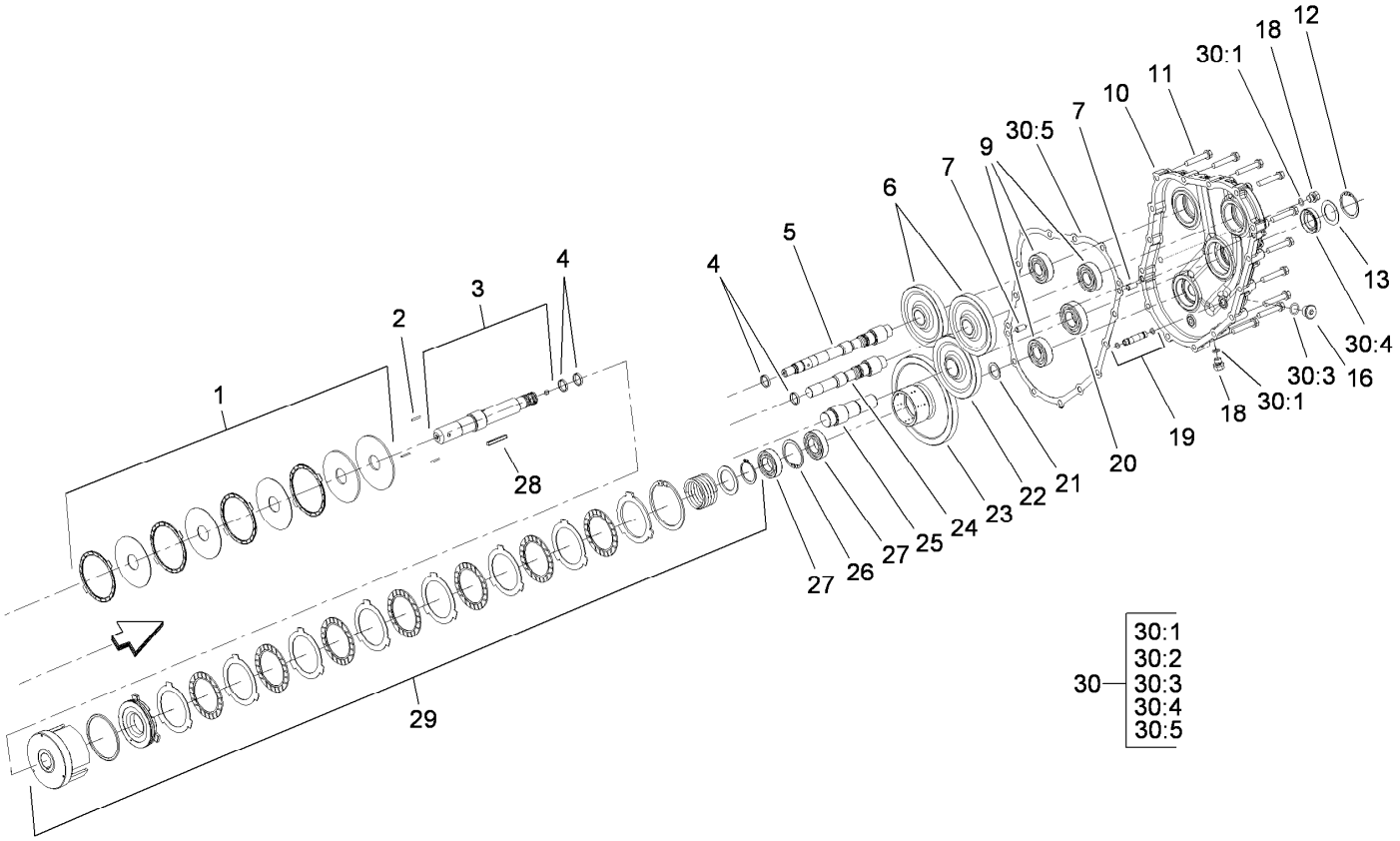

Gear Case and Clutch Assembly
Transmission Assembly No. 107-0801

Ref.	Part Number	Qty.	Description
1	107-0839	1	PTO Brake ASM
2	107-0837	3	Rod-Push
3	107-0833	1	PTO Shaft ASM
4	107-0825	2	Ring-Seal
5	107-0827	1	Shaft-Pump
6	107-0823	2	Gear-Pump
7	92-0765	4	Pin-Parallel
9	107-0826	4	Bearing
10	107-0815	1	Housing-Gear Case
11	107-0863	13	Bolt
12	92-0757	1	Ring-Snap
13	107-0813	1	Spacer
16	107-0861	1	Plug-NPTF
18	107-0857	6	Plug
19	107-0811	1	Pipe
20	107-0821	2	Bearing

Ref.	Part Number	Qty.	Description
21	107-0836	1	Spacer
22	107-0820	1	Gear-Input
23	107-0834	1	Gear-PTO
24	107-0822	1	Shaft-Pump
25	107-0819	1	Shaft-Input
26	92-0758	1	Ring-Snap
27	107-0838	3	Bearing
28	107-0866	1	Key
29	107-0835	1	Clutch Cylinder ASM
30	107-0854	1	Gear Housing Seal Kit
30:1	107-0817	2	O Ring-Plug
30:2		2	O-Ring ●
30:3	104-3298	1	Packing
30:4	107-0814	1	Seal
30:5	107-0816	1	Gasket-Housing, Gear

● Not serviced separately

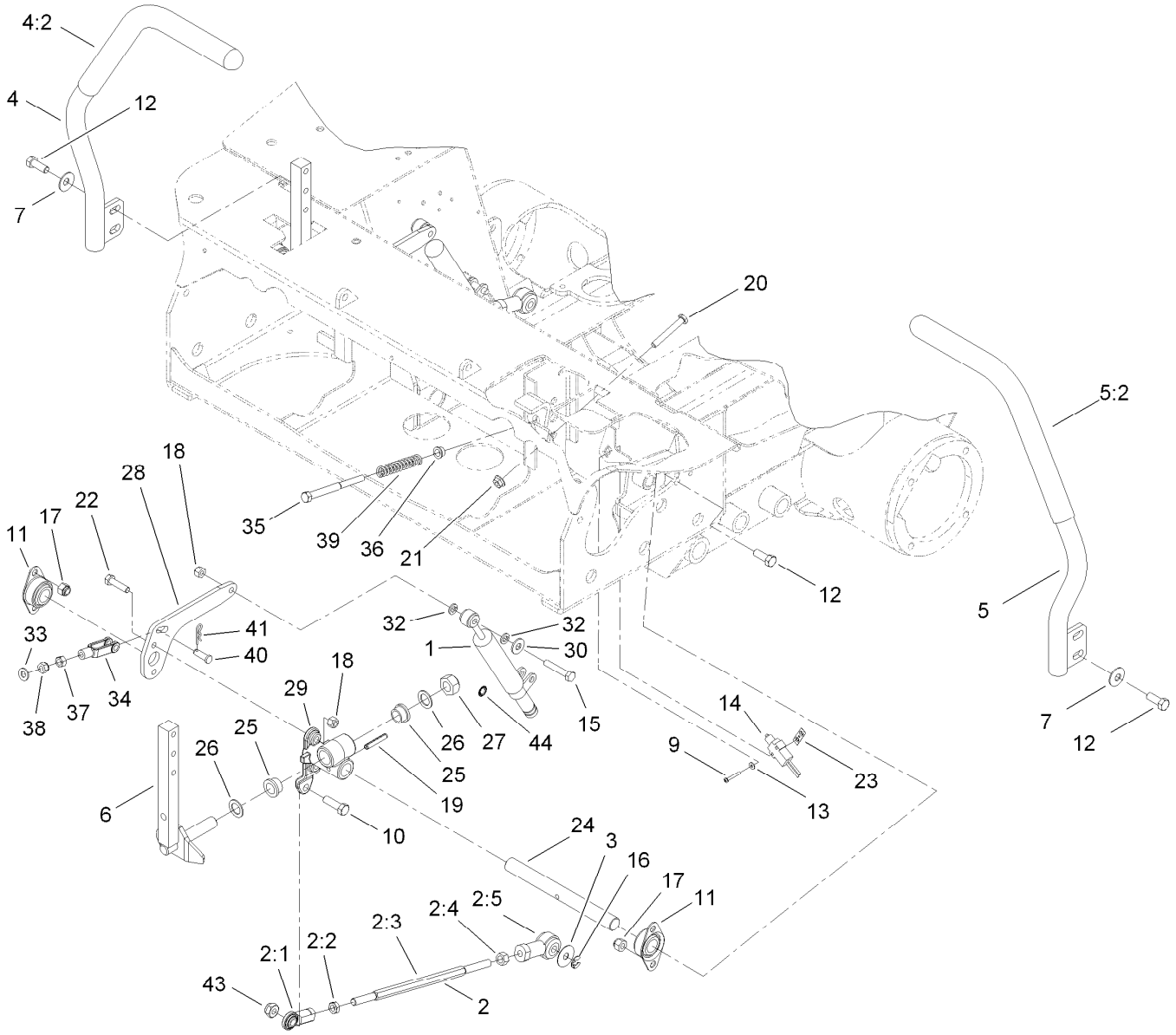

Traction Control Assembly

Ref.	Part Number	Qty.	Description
1	105-7280	2	Damper
2	112-5099	2	Link ASM
2:1	103-1167	1	Joint-Ball End, LH
2:2	3219-20	1	Nut-Hex, LH
2:3	105-7239	1	Rod-Threaded
2:4	3219-3	1	Nut-Hex
2:5	105-7199	1	Rod End-Isolated
3	105-6814	2	Washer-Plain
4	108-5208	1	RH Lever And Grip ASM
4:2	108-5213	1	Grip-Foam
5	108-5209	1	LH Lever And Grip ASM
5:2	108-5213	1	Grip-Foam
6	108-9833-03	2	Lever ASM
7	3290-461	4	Washer-Spring
9	3250-35	4	Screw-PPH
10	323-7	2	Screw-HH
11	1-633102	4	Bearing-Flange, Side
12	323-6	12	Screw-HH
13	3256-53	4	Washer-Flat, #6
14	99-3410	2	Switch
15	322-9	2	Screw-HH

Ref.	Part Number	Qty.	Description
16	32151-47	2	Ring-Retaining
17	3296-39	8	Nut-Lock, NI
18	3296-29	6	Nut-Lock, NI
19	32121-15	2	Pin-Roll
20	9114524	2	Bolt-TAP, HH
21	32128-26	2	Nut-Flange
22	322-6	4	Screw-HH
23	108-9824	2	Nut-Switch
24	108-9830	2	Shaft-Pivot
25	105-3455	4	Bushing
26	105-3481	4	Washer-Thrust
27	32152-6	2	Nut-Lock, Cone
28	108-9829-03	2	Lever-Damper
29	108-9831	2	Hub-Control
30	3256-3	2	Washer-Flat
32	3253-4	4	Washer-Lock
33	3256-23	2	Washer-Flat
34	1-303105	2	Yoke-Adjustable
35	1-603737	2	Bolt-Return, Neutral
36	1-603735	2	Bushing-Flanged
37	3219-2	2	Nut-Hex

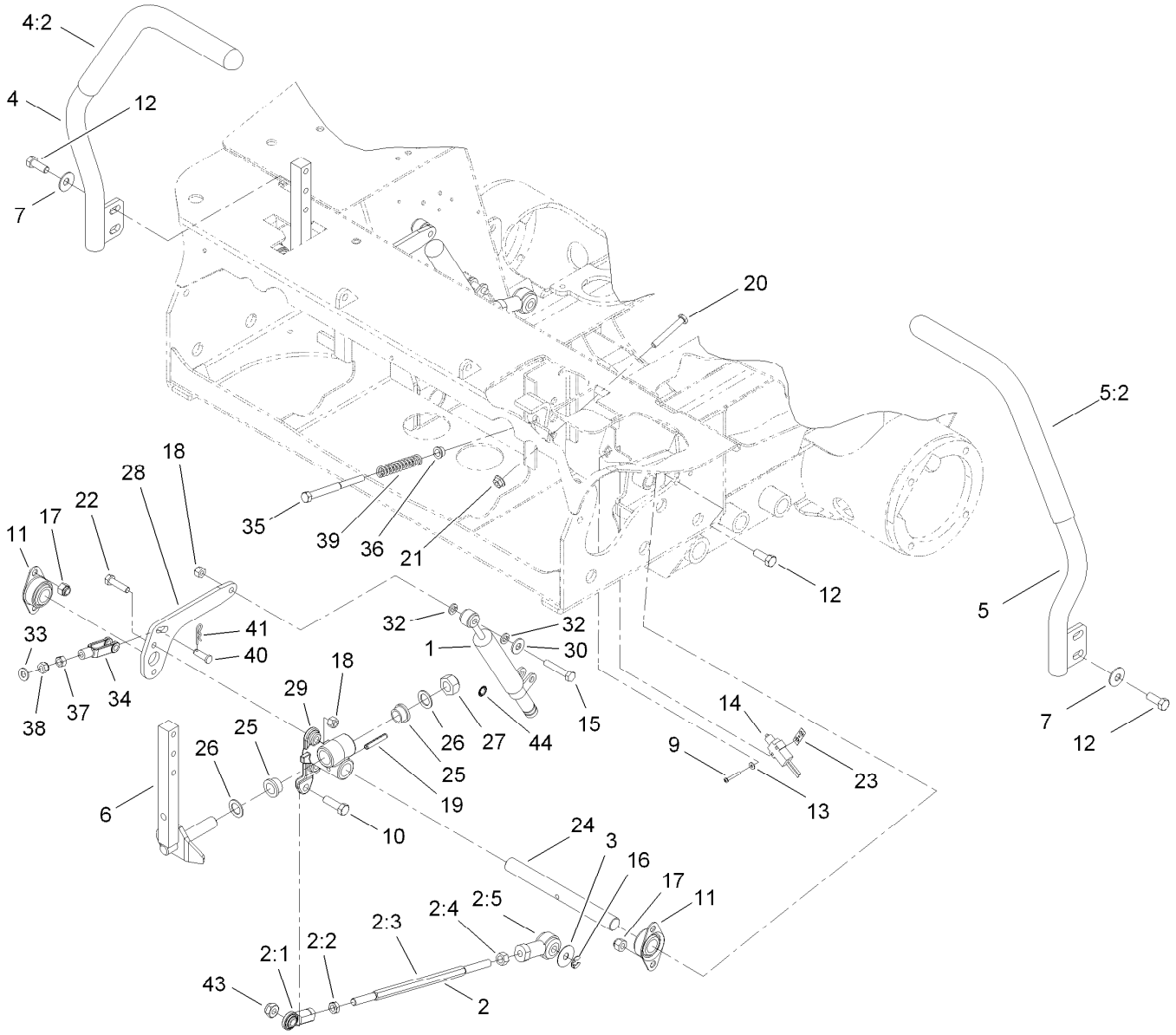

Traction Control Assembly (continued)

Ref.	Part Number	Qty.	Description
38	3296-4	2	Nut-Lock
39	1-603807	2	Spring-Return, Neutral
40	283-1	2	Pin-Clevis
41	3290-307	2	Pin-Hair
43	3296-44	2	Nut-Lock, NI
44	32151-72	2	Ring-Retaining

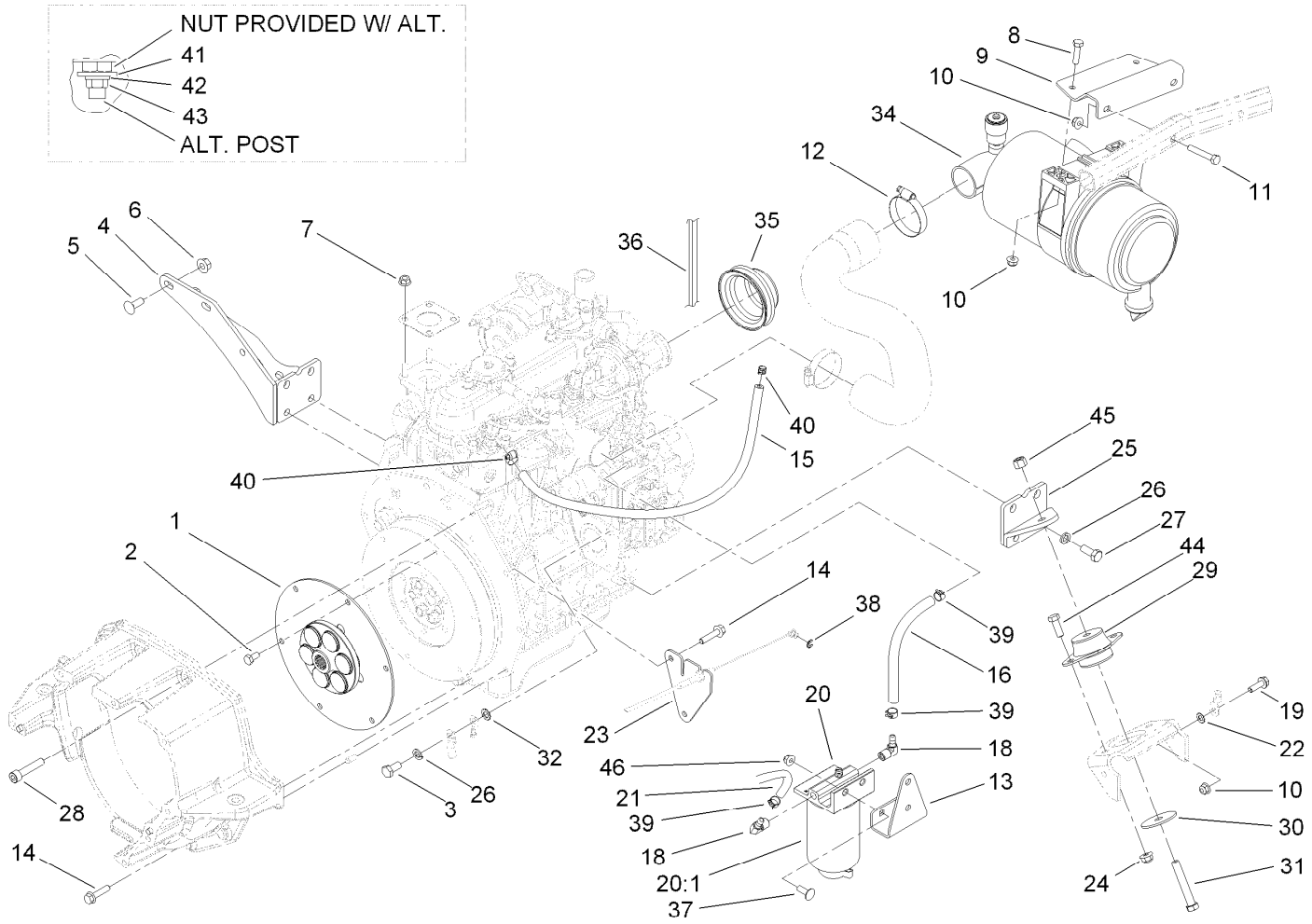

Engine Component Assembly

Ref.	Part Number	Qty.	Description
1	110-9729	1	Flywheel Coupling ASM
2	33114-016	6	Screw-HH
3	63-7790	1	Screw-Cap
4	108-9926-03	1	Muffler Bracket ASM
5	3231-22	2	Screw-CARR
6	32128-29	2	Nut-Lock, Flange
7	33004-00	4	Nut-HF
8	322-6	2	Screw-HH
9	108-9843-03	1	Support-Cleaner, Air
10	104-8300	5	Nut-Flange, NI
11	322-10	2	Screw-HH
12	2412-130	1	Clamp-Hose
13	114-4058-03	1	Mount-Separator
14	33104-035	8	Screw-HHF
15	110-8255	1	Hose-Fuel
16	110-4104	1	Hose-Fuel
18	353-781	2	Fitting-Elbow
19	3234-17	1	Screw-HHF
20	110-9044	1	Filter-Seperator
20:1	110-9049	1	Filter-Spin On
21	114-4028	1	Hose-Fuel

Ref.	Part Number	Qty.	Description
22	3255-8	1	Washer-Lock
23	114-4060	1	Bracket-Throttle
24	104-8301	4	Nut-Flange, NI
25	105-7235-03	1	LH Rear Mount ASM
26	48-9590	9	Washer-Lock
27	43-0090	8	Screw-HH
28	3274-106	2	Screw-HSH
29	53-9681	2	Mount-Engine
30	87-5100	2	Washer-Snubbing
31	324-11	2	Screw-HH
32	3255-9	1	Washer-Lock
34	104-3428	1	Air Cleaner ASM
35	98-9584	1	Pulley-Fan
36	98-9676	1	V-Belt
37	3230-10	2	Screw-CARR
38	701197	1	E-Ring
39	92-2379	3	Clamp-Hose
40	2412-80	2	Clamp-Line, Fuel
41	3256-2	1	Washer-Flat
42	43-5930	1	Washer-Lock, Spring
43	33013-00	1	Nut-Hex

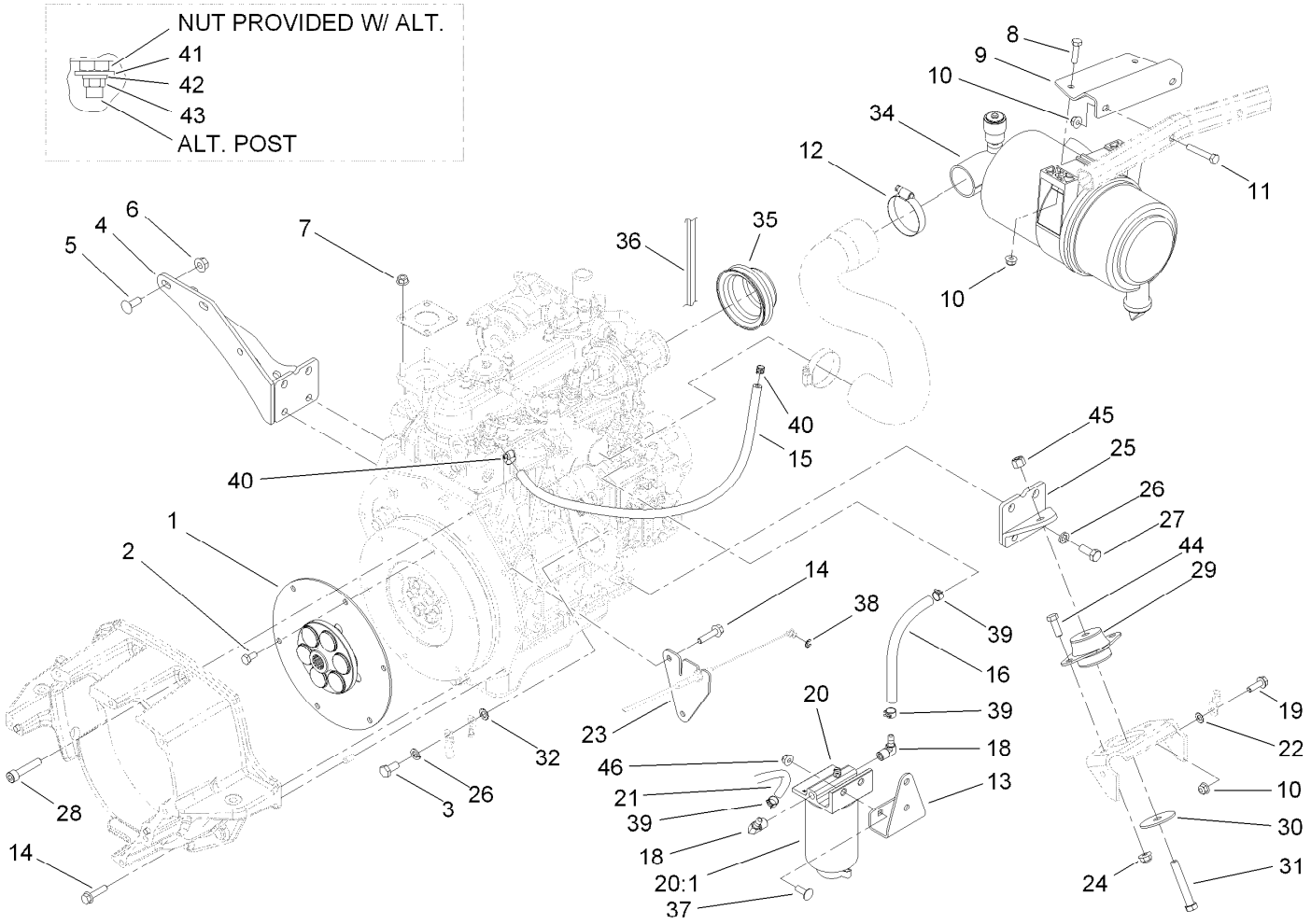

Engine Component Assembly (continued)

Ref.	Part Number	Qty.	Description
44	323-6	4	Screw-HH

Ref.	Part Number	Qty.	Description
45	3296-48	2	Nut-Lock, NI
46	32128-44	2	Nut

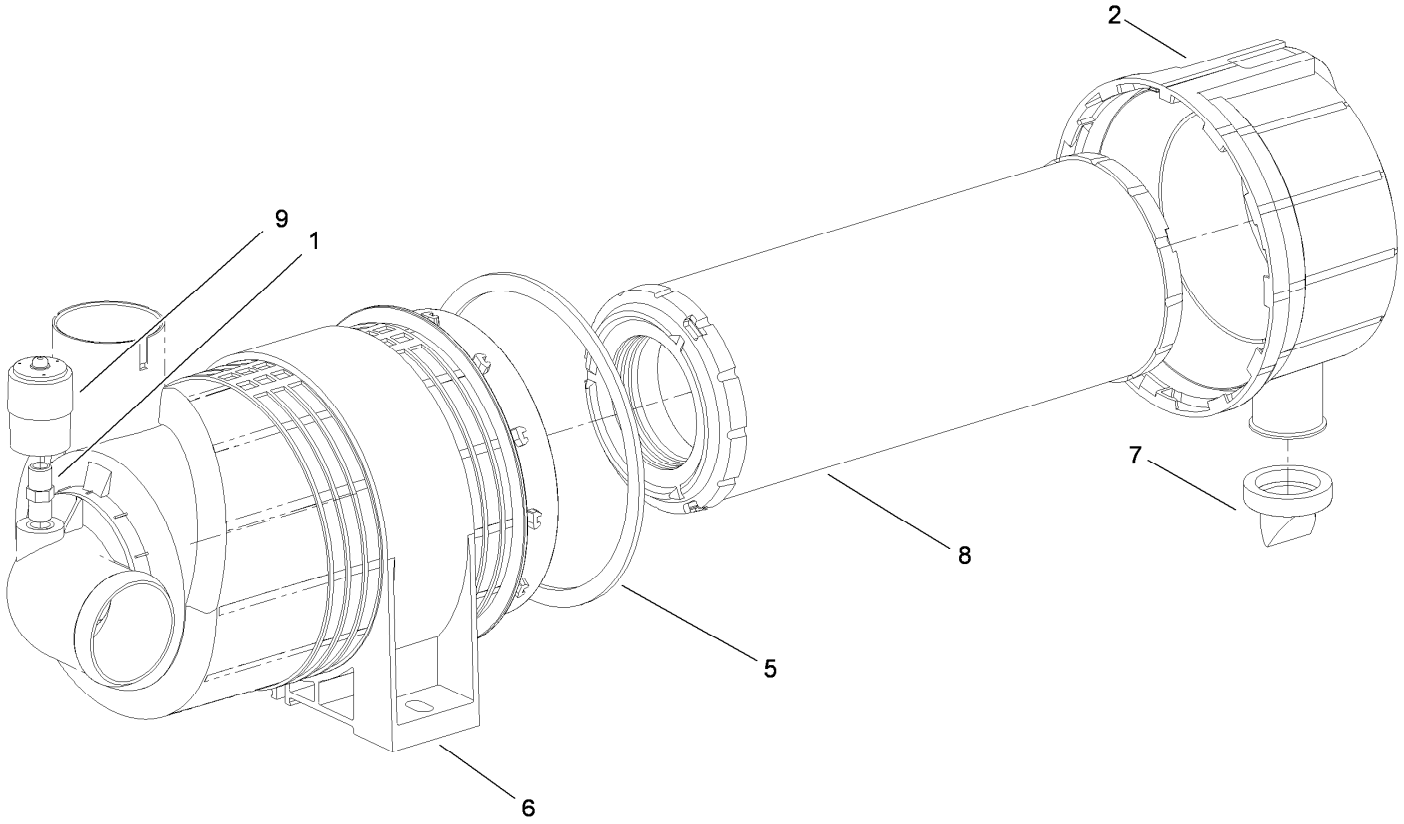

Air Cleaner Assembly No. 104-3428

Ref.	*Part Number*	*Qty.*	*Description*
1	105-4292	1	Nipple-Pipe
2	104-0497	1	Cover ASM
5	104-4897	1	Gasket
6	98-4525	1	Bracket-Cleaner, Air
7	104-0498	1	Valve-Vacuator
8	108-3810	1	Filter-Air
9	93-9164	1	Indicator-Mini

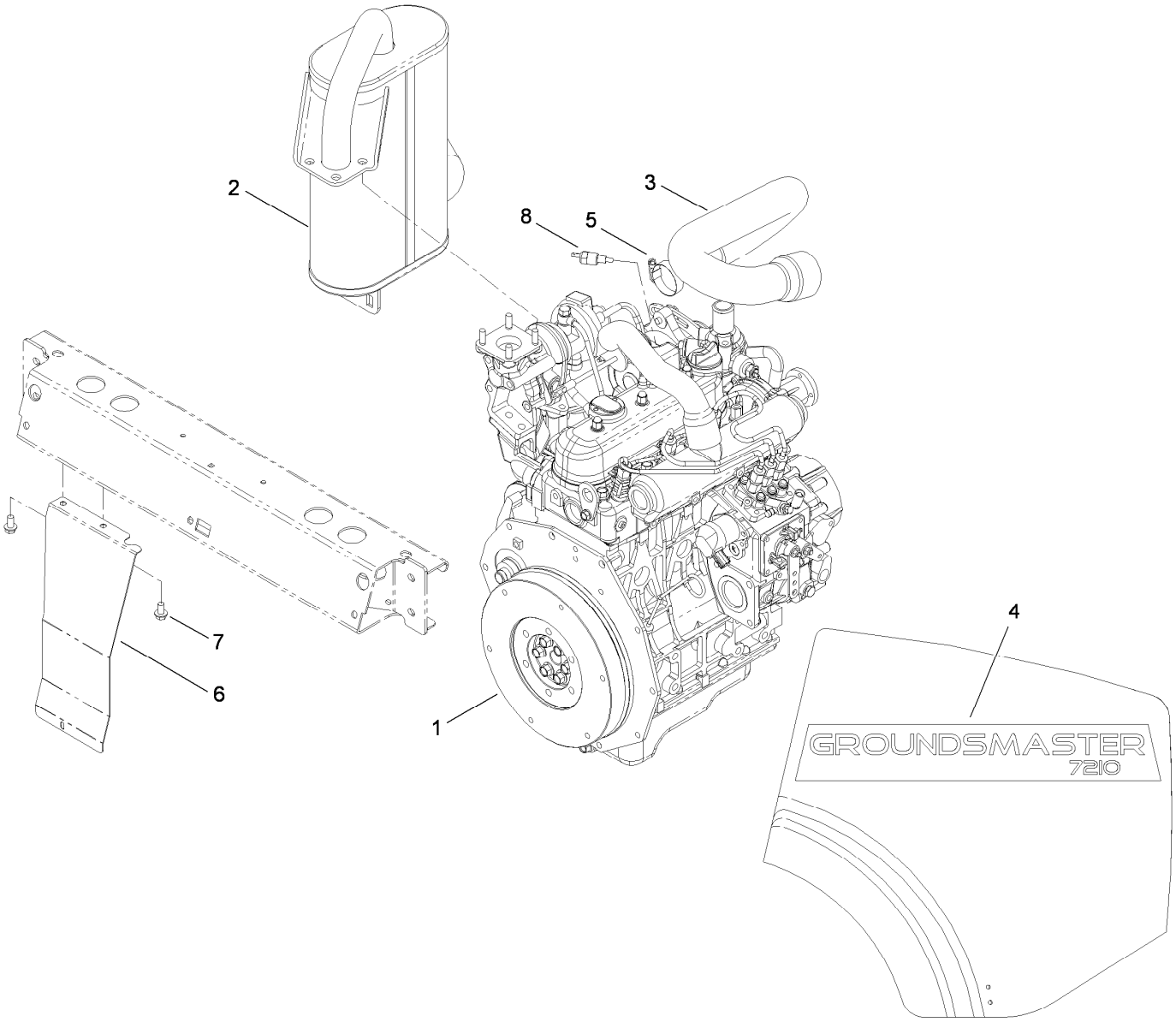

Engine, Muffler and Shield Assembly

Ref.	*Part Number*	*Qty.*	*Description*
1	114-4080	1	Engine-Kubota
2	108-9912	1	Muffler
2:1	112-1688	1	Spark Arrestor Kit ●
3	112-9582	1	Hose-Air Inlet, Turbo
4	110-5545	2	Decal-Hood
5	2412-3	1	Clamp-Hose
6	112-6368-03	1	Shield-Heat
7	32144-14	2	Screw-HWHTF
8	98-9719	1	Thermoswitch

● Not illustrated

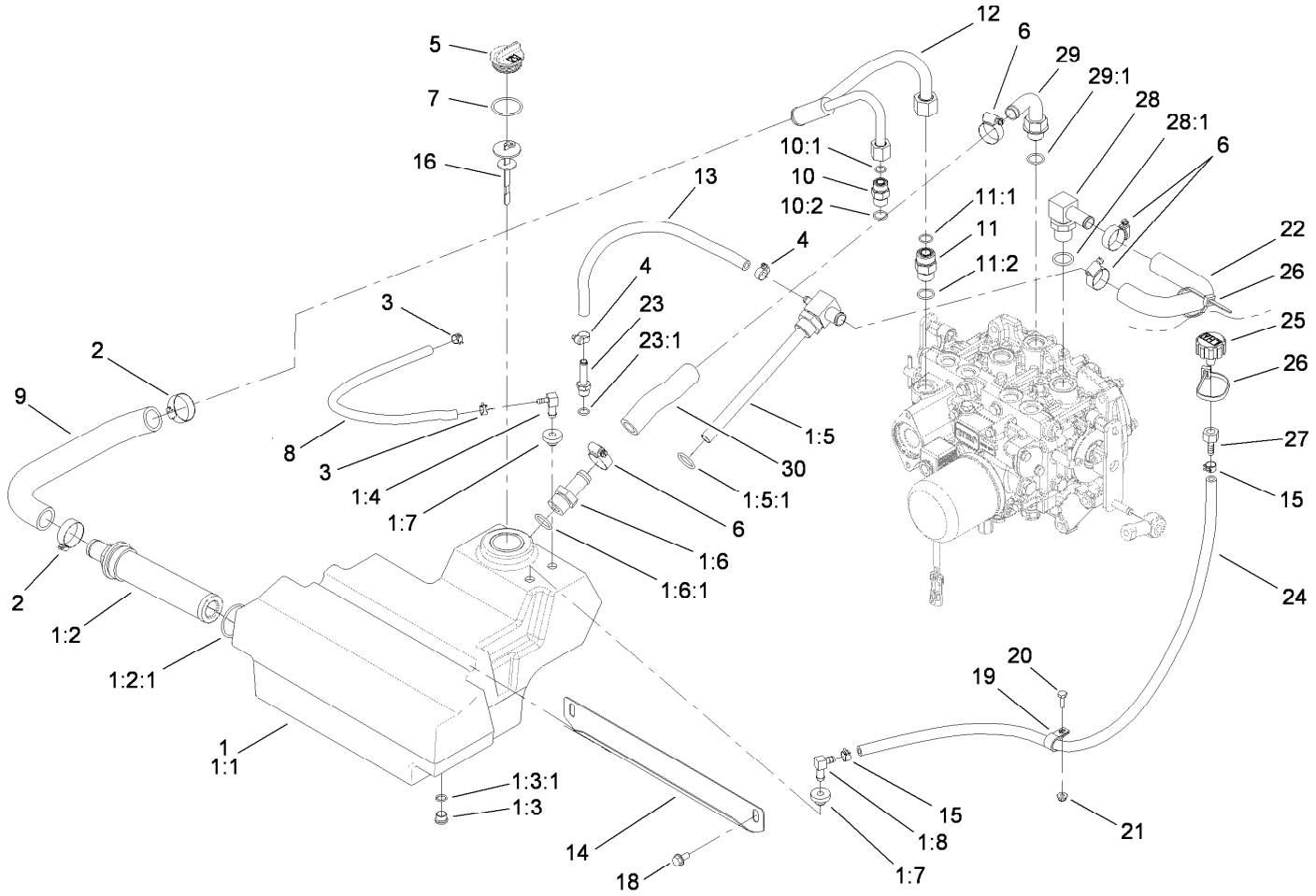

Hydraulic Assembly

Ref.	Part Number	Qty.	Description
1	110-8237	1	Hydraulic Reservoir ASM
1:1	108-5200	1	Reservoir-Hydraulic
1:2	104-7546	1	Strainer-Tank
1:2:1	340-136	1	O-Ring
1:3	353-989	1	Plug-Hex, Hollow
1:3:1	237-42	1	O-Ring
1:4	104-5228	1	Fitting-Elbow, 90 DEG
1:5	108-9894	1	Fitting-Elbow, Special
1:5:1	237-81	1	O-Ring
1:6	354-73	1	Fitting-Straight
1:6:1	237-81	1	O-Ring
1:7	46-6560	2	Bushing
1:8	46-6550	1	Fitting-Elbow, 90 DEG
2	2412-34	2	Clamp-Hose
3	2412-98	2	Clamp
4	2412-108	2	Clamp-Worm
5	93-7498	1	Plug-Plastic
6	2412-129	4	Clamp-Hose
7	94-8166	1	O-Ring
8	109-0299	1	Hose-Fuel
9	110-5526	1	Hose-Suction
10	340-4	1	Fitting-HYD, Straight
10:1	237-30	1	O-Ring
10:2	237-79	1	O-Ring
11	340-7	1	Adapter

Ref.	Part Number	Qty.	Description
11:1	237-65	1	O-Ring
11:2	237-80	1	O-Ring
12	110-5532	1	Tube ASM
13	94-5625	1	Hose-Overflow, Radiator
14	110-5529-03	1	Support-Reservoir
15	92-2379	2	Clamp-Hose
16	112-6365	1	Dipstick ASM
18	32144-14	2	Screw-HWHTF
19	2412-87	1	Clamp-Cable
20	321-4	1	Screw-HH
21	104-7201	1	Nut-HF
22	110-5524	1	Hose-Return
23	353-979	1	Fitting-Straight
23:1	237-42	1	O-Ring
24	110-9662	1	Hose-Fuel
25	68-6150	1	Breather
26	3290-379	2	Tie-Cable
27	354-95	1	Fitting-Straight
28	353-987	1	Fitting-HYD, 90 DEG (Barbed)
28:1	237-81	1	O-Ring
29	110-5522	1	Fitting-Elbow, 90
29:1	237-80	1	O-Ring
30	112-1680	1	Hose-HYD

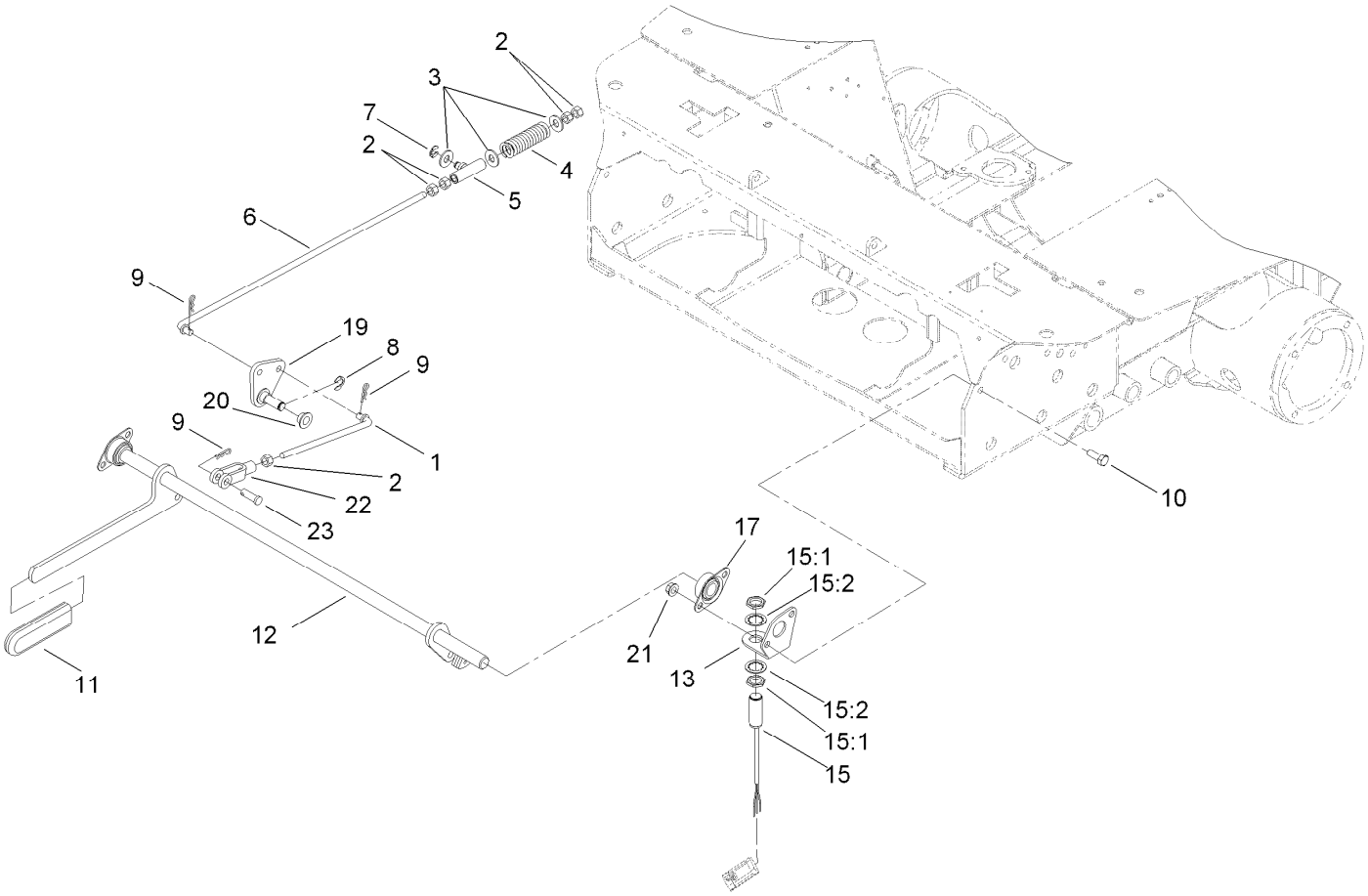

Parking Brake Assembly

Ref.	Part Number	Qty.	Description
1	120-0023	2	Rod-Brake
2	3219-3	10	Nut-Hex
3	3256-4	6	Washer-Flat
4	109-2230	2	Spring-Compression
5	112-1676	2	Swivel ASM
6	120-0009	2	Rod-Brake
7	32151-47	2	Ring-Retaining
8	32151-68	2	Ring-Retaining
9	3290-307	6	Pin-Hair
10	323-6	4	Screw-HH
11	1-633268	1	Grip-Lever

Ref.	Part Number	Qty.	Description
12	117-5582-03	1	Brake Handle ASM
13	117-5572	1	Bracket-Switch
15	115-5300	1	Proximity Switch ASM
15:1	117-3207	2	Nut-Hex
15:2	117-3208	2	Washer-Lock, Int Tooth
17	1-633102	2	Bearing-Flange, Side
19	120-0022	2	Brake Pivot ASM
20	1-513140	4	Bearing-Control
21	3290-357	4	Nut-HHF, Whiz
22	1-633131	2	Yoke-Linkage, Brake
23	1-808285	2	Pin-Clevis

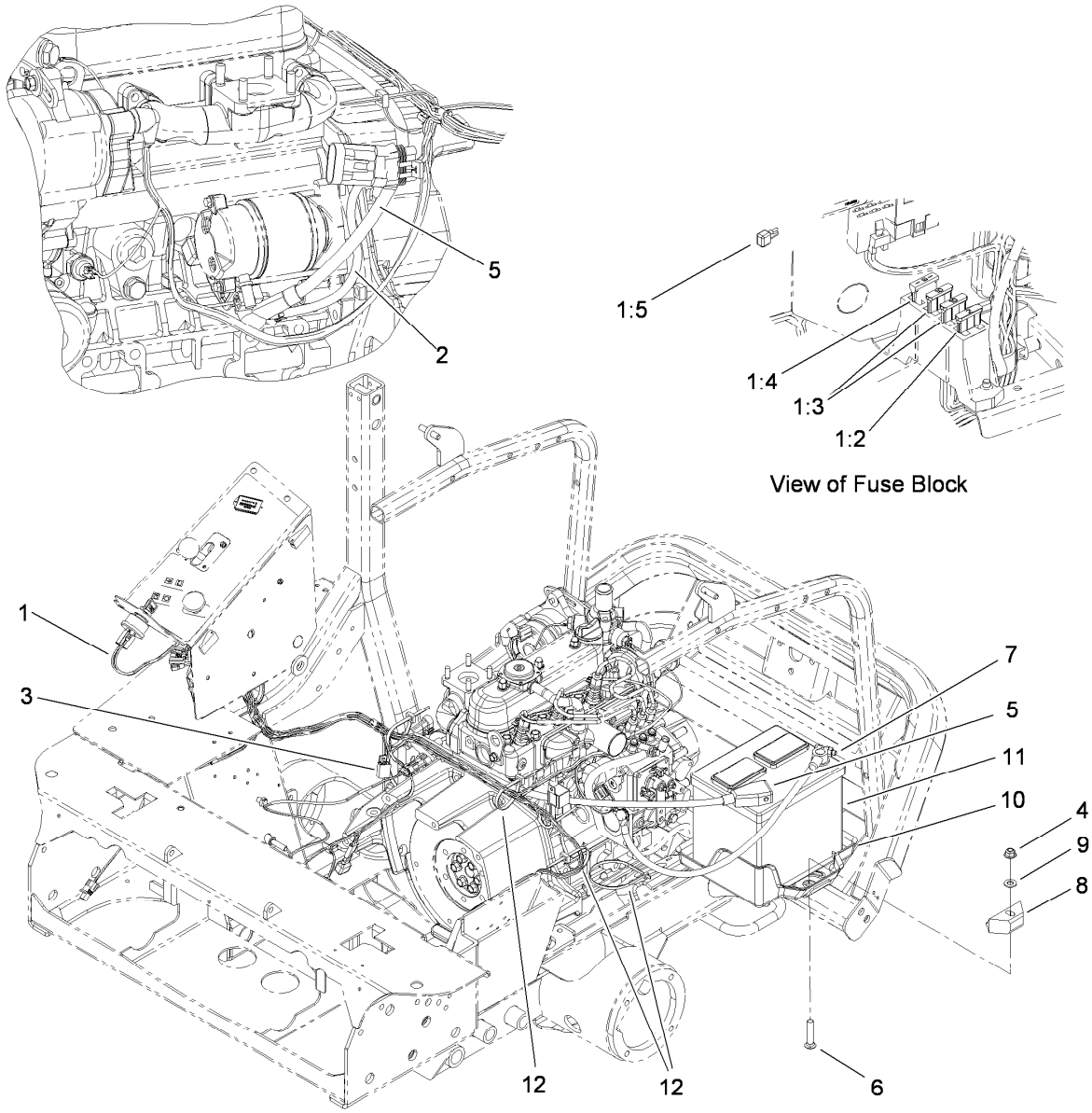

Electrical Assembly

Ref.	Part Number	Qty.	Description
1	117-5636	1	Harness-Wire, Main
1:2	94-6710	1	Fuse-2 Amp
1:3	218-578	2	Fuse-Blade, 10 Amp
1:4	109355	1	Fuse-Blade, 15 Amp
1:5	100-4918	1	Diode
2	99-3441	1	Harness-Wire, Fusible Link
3	108-8657	1	Harness-Wire, Seat
4	104-8301	1	Nut-Flange, NI

Ref.	Part Number	Qty.	Description
5	119-1796	1	Cable-Battery, Positive
6	3231-6	1	Screw-CARR
7	105-0040	1	Cable-Battery, Negative
8	66-2490	1	Retainer-Battery
9	3256-24	1	Washer-Flat
10	108-9928	1	Tray-Battery
11	106-5187	1	Battery
12	3290-378	5	Tie-Cable

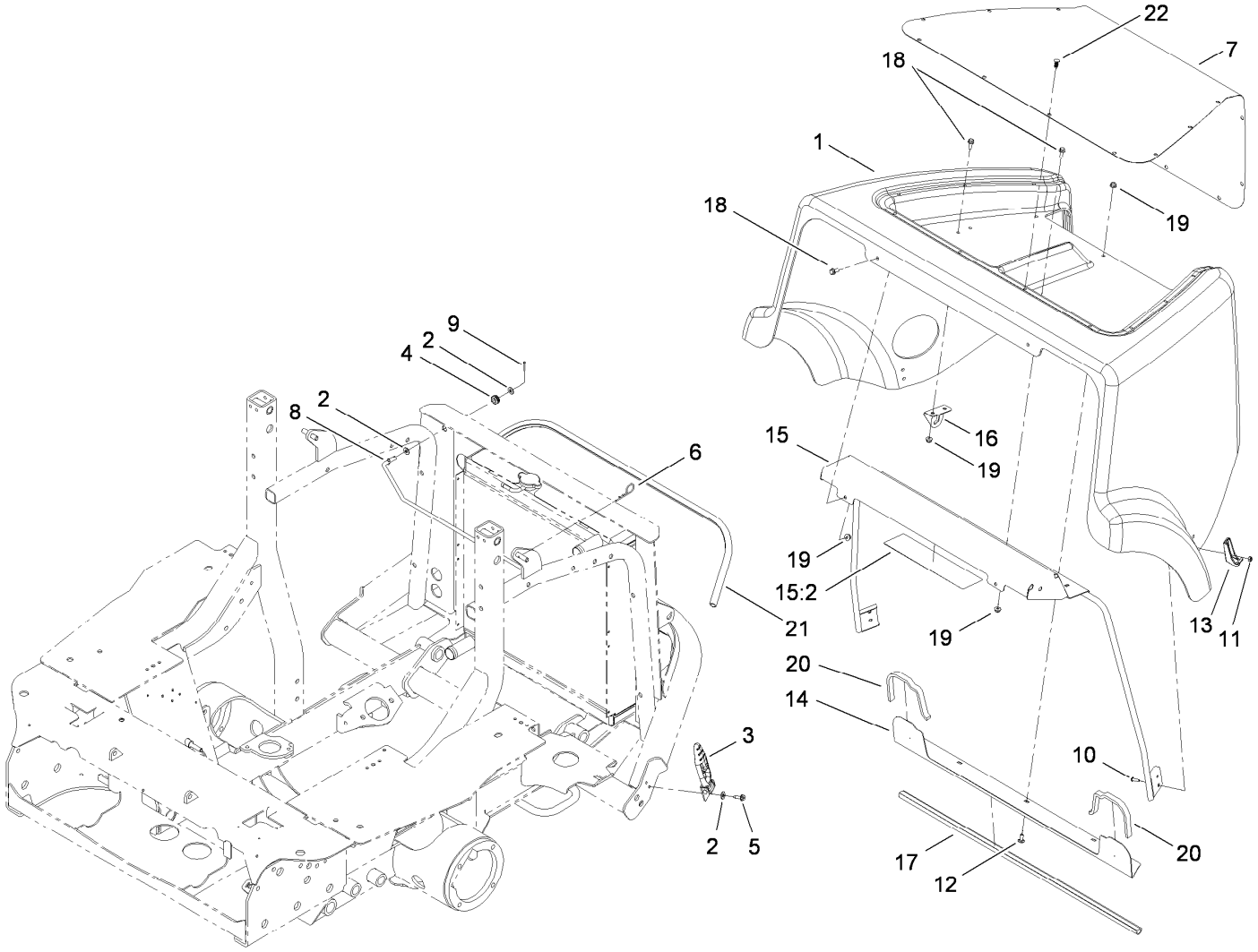

Hood Assembly

Ref.	Part Number	Qty.	Description
1	112-6311	1	Hood ASM
2	3256-2	4	Washer-Flat
3	103-2898	2	Latch-Rubber
4	237-136	1	Grommet
5	32104-95	2	Screw-HWH
6	3290-255	1	Pin-Cotter, Hair
7	115-1446-03	1	Screen-Intake
8	110-8291	1	Rod-Prop, Hood
9	3272-6	1	Pin-Cotter
10	3274-39	4	Screw-HSBH
11	3296-2	4	Nut-Lock, NI
12	3229-11	3	Screw-CARR

Ref.	Part Number	Qty.	Description
13	103-2897	2	Latch-Catch
14	110-8285-03	1	Angle-Seal
15	110-9795	1	Support-Hood
15:2	110-9781	1	Decal-Danger
16	108-9811	1	Support-Rod, Prop
17	110-8287	1	Bulb-Seal
18	3234-33	8	Screw-HHF
19	104-7201	11	Nut-HF
20	110-8288	2	Seal-Foam
21	112-1694	1	Seal-Bulb
22	114-4899	17	Plug-Plastic

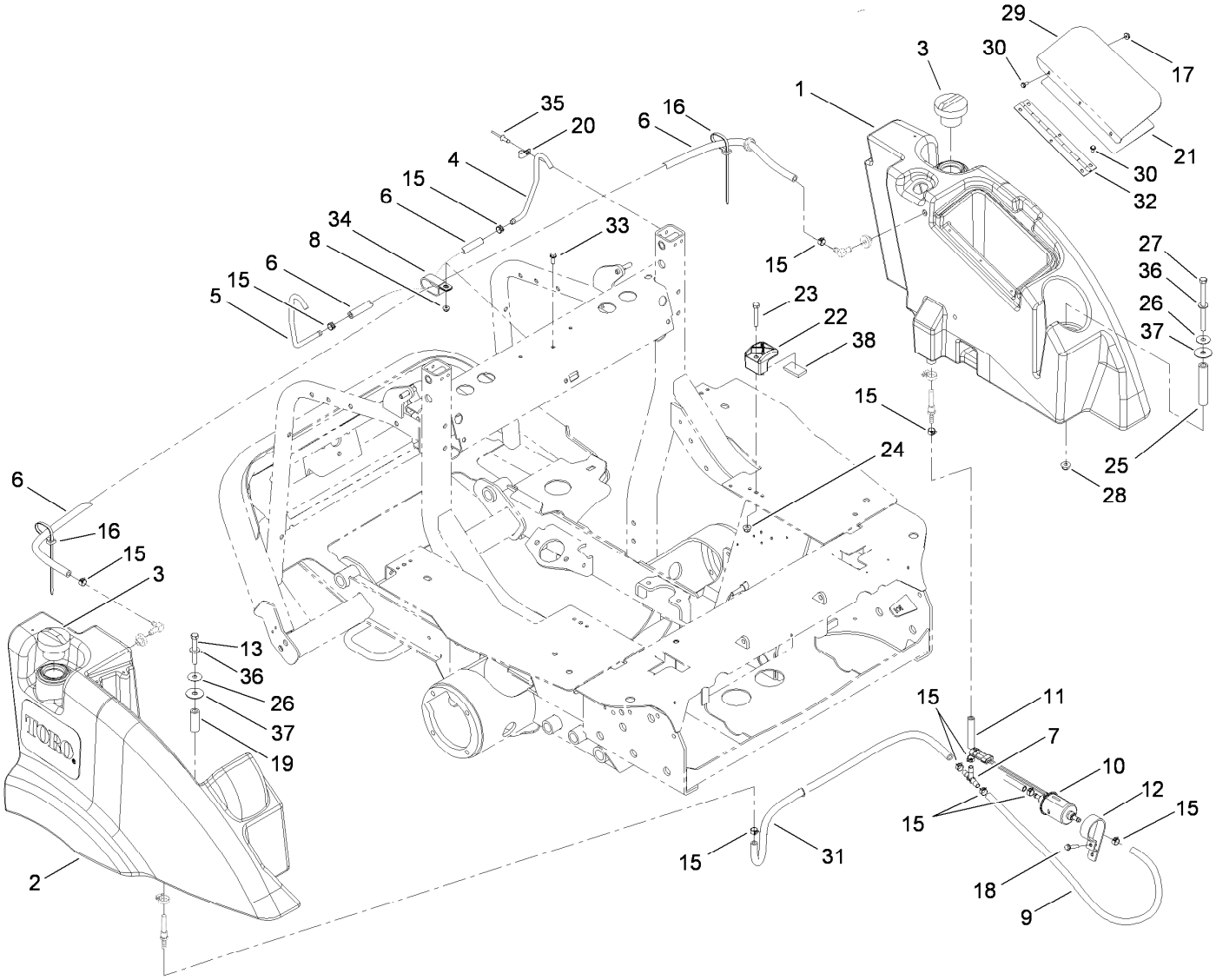

Fuel Tank Assembly

Ref.	Part Number	Qty.	Description
1	110-8230	1	LH Fuel Tank ASM
2	110-8236	1	RH Fuel Tank ASM
3	115-5305	2	Cap-Fuel
4	110-8261	1	Tube-Vent, LH
5	110-8260	1	Tube-Vent, RH
6	110-6186	2	Hose-Fuel
7	354-107	1	Fitting-HYD, Tee
8	104-7201	1	Nut-HF
9	110-4113	1	Hose-Fuel
10	110-8806	1	Pump-Fuel
11	112-6388	1	Hose-Fuel
12	110-8817	1	Bracket-Pump, Fuel
13	323-13	1	Screw-HH
15	92-2379	11	Clamp-Hose
16	3290-378	2	Tie-Cable
17	32149-8	3	Nut-Keps
18	32144-110	1	Screw-HWH
19	92-1239	1	Spacer-Support
20	2412-89	2	Clamp-R

Ref.	Part Number	Qty.	Description
21	110-8252	1	Decal-Instructions, Service
22	107-4543	4	Clamp
23	322-10	4	Screw-HH
24	104-8300	4	Nut-Flange, NI
25	110-5539	1	Spacer
26	105-6814	2	Washer-Plain
27	323-39	1	Screw-HH
28	104-8301	2	Nut-Flange, NI
29	110-5540-03	1	Cover-Toolbox
30	112-6349	6	Screw-HWH
31	109-0309	1	Hose-Fuel
32	108-2024	1	Hinge
33	3229-11	1	Screw-CARR
34	92-5753	1	Clamp-Hose
35	3290-412	2	Rivet
36	3256-24	2	Washer-Flat
37	95-1905	2	Washer-Rubber
38	112-9561	4	Pad-Foam

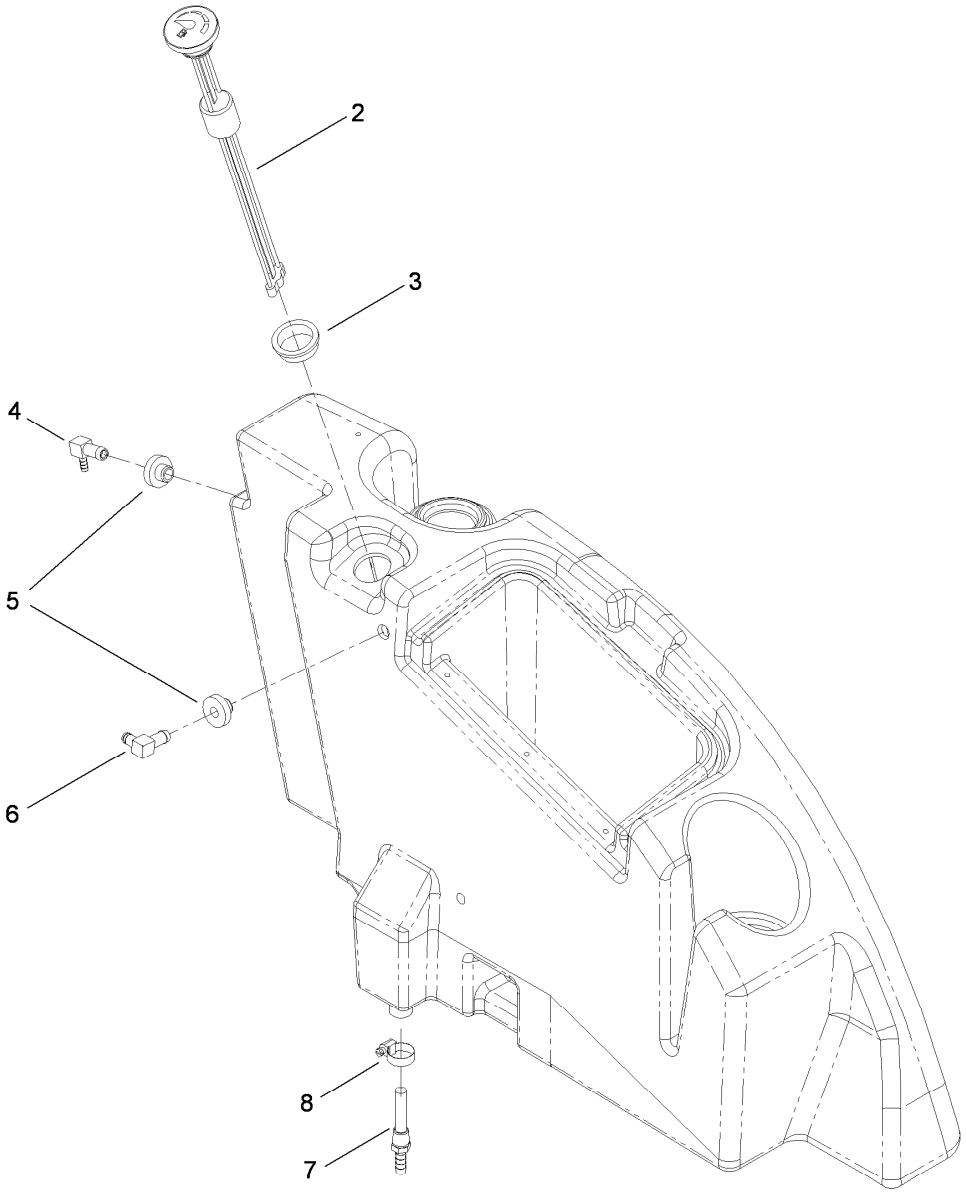

LH Fuel Tank Assembly No. 110-8230

Ref.	*Part Number*	*Qty.*	*Description*
2	110-8262	1	Gauge-Fuel
3	95-8972	1	Grommet
4	104-5228	1	Fitting-Elbow, 90 DEG
5	46-6560	2	Bushing
6	1-643259	1	Fitting-Elbow
7	112-6374	1	Fitting-Strainer
8	2412-36	1	Clamp-Hose

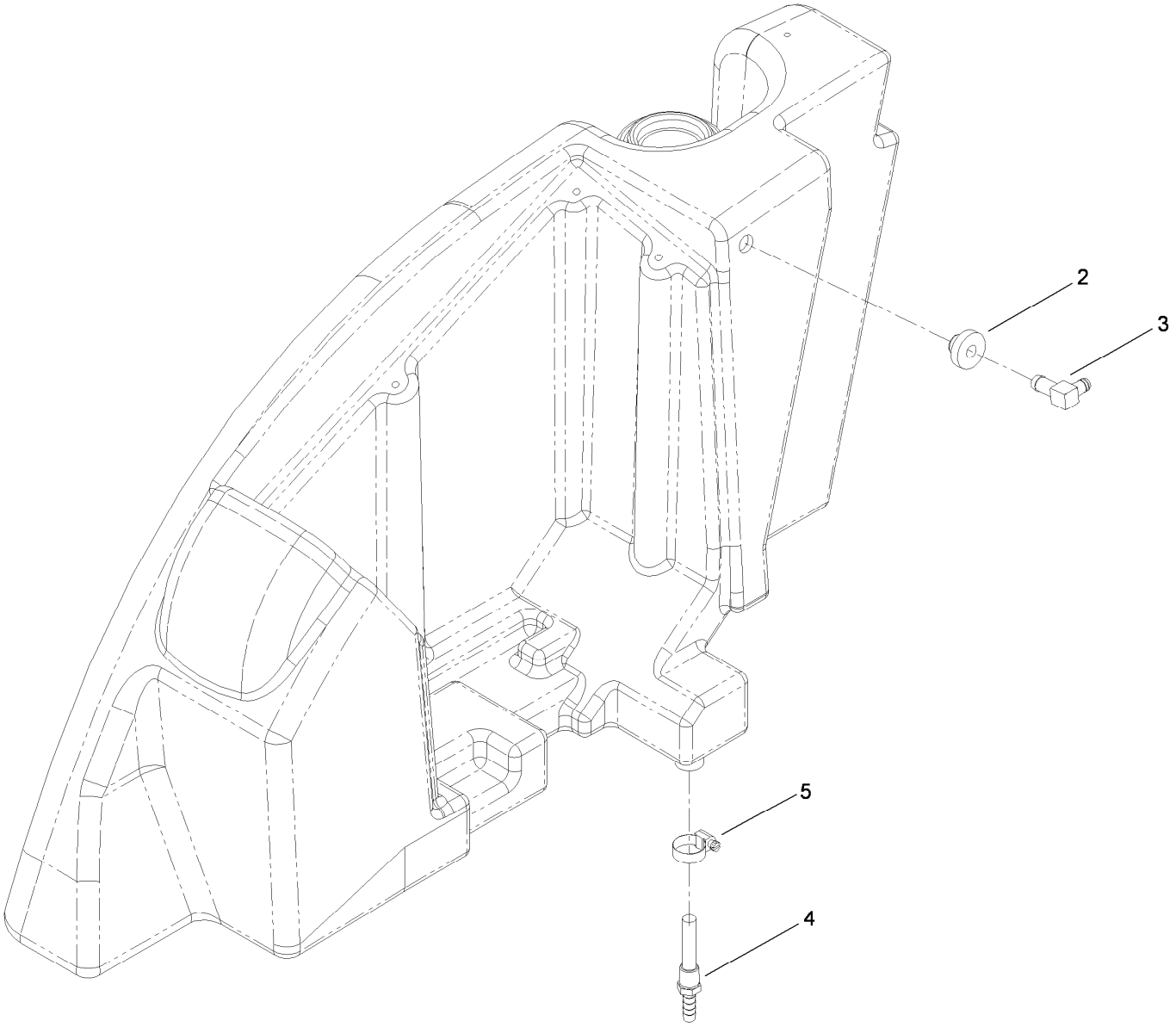

RH Fuel Tank Assembly No. 110-8236

Ref.	*Part Number*	*Qty.*	*Description*
2	46-6560	1	Bushing
3	1-643259	1	Fitting-Elbow
4	112-6374	1	Fitting-Strainer
5	2412-36	1	Clamp-Hose

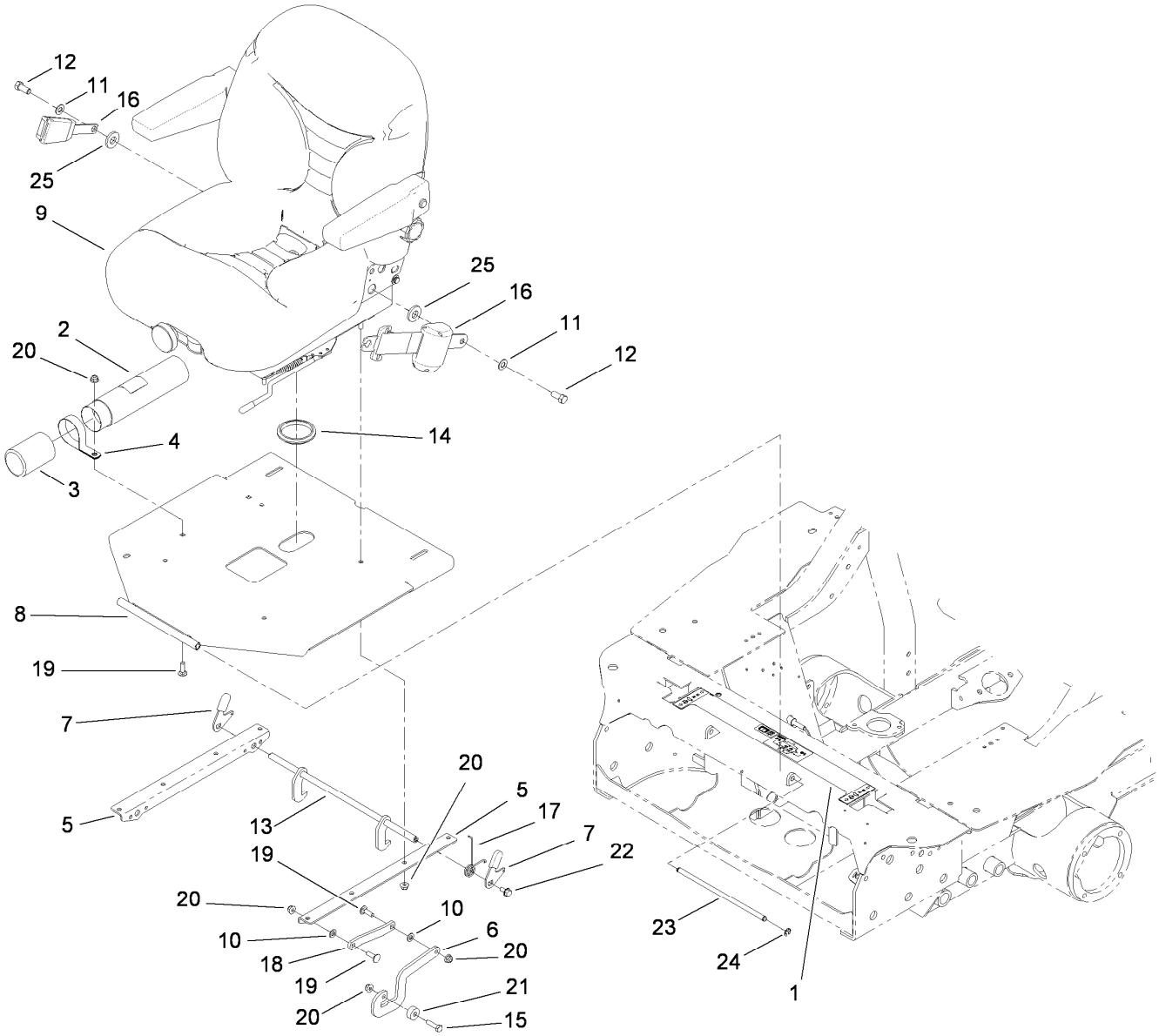

Seat Assembly

Ref.	Part Number	Qty.	Description
1	110-9774	1	Decal-Safety
2	104-7050	1	Tube-Manual
3	104-7048	1	Cap-Housing
4	2412-133	2	R-Clamp
5	108-5238-03	2	Angle-Latch
6	110-5512	1	Lever-Stop, Seat
7	108-5243	2	Lever-Latch
8	107-2272-03	1	Plate-Seat
9	107-2286	1	Seat ASM
10	3256-23	2	Washer-Flat
11	3256-25	2	Washer-Flat
12	3212-4	2	Screw-HH
13	108-5240	1	Latch ASM

Ref.	Part Number	Qty.	Description
14	237-164	1	Grommet
15	322-6	1	Screw-HH
16	110-0413	1	Seatbelt-Retractable
17	106-4048	1	Spring-Torsion
18	110-5513	1	Link-Seat
19	3230-2	4	Bolt-CARR
20	104-8300	9	Nut-Flange, NI
21	104-1429	1	Spacer-Plain
22	32144-14	2	Screw-HWHTF
23	112-1686	1	Pin-Clevis
24	105-7004	2	E-Ring
25	99-7667	2	Washer-Flat

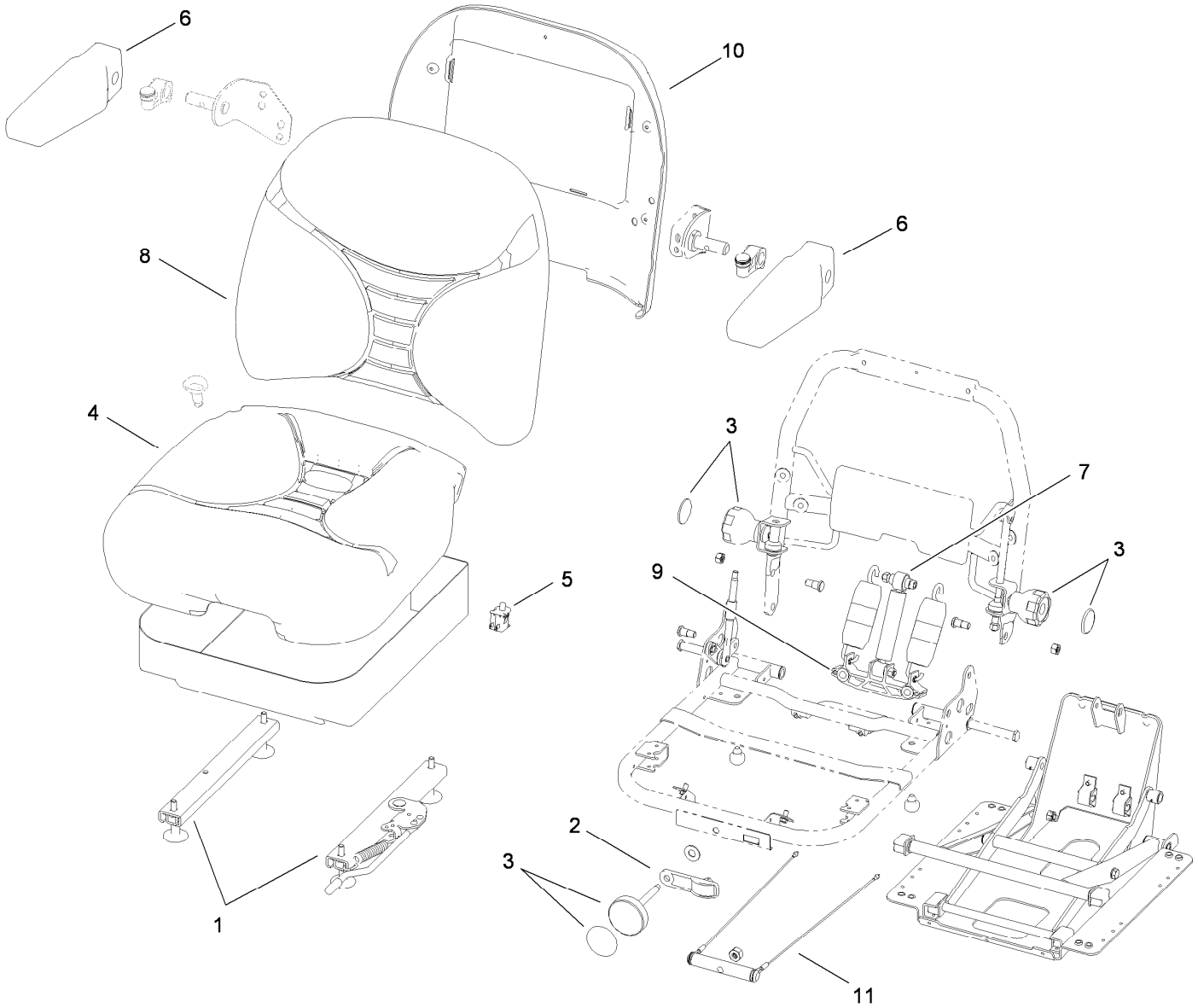

Seat Assembly No. 107-2286

Ref.	*Part Number*	*Qty.*	*Description*
1	107-1880	1	Seat Track Kit
2	107-1885	1	Weight Indicator Kit
3	107-1881	1	Knob Kit
4	107-1883	1	Bottom Cushion Kit
5	82-2190	1	Switch-Bail
6	107-1887	1	Armrest Kit
7	107-1884	1	Shock Absorber Kit
8	107-1882	1	Back Cushion Kit
9	109-3343	1	Spring And Saddle Kit
10	109-3344	1	Back Panel Kit
11	109-3345	1	Weight Adjust Kit

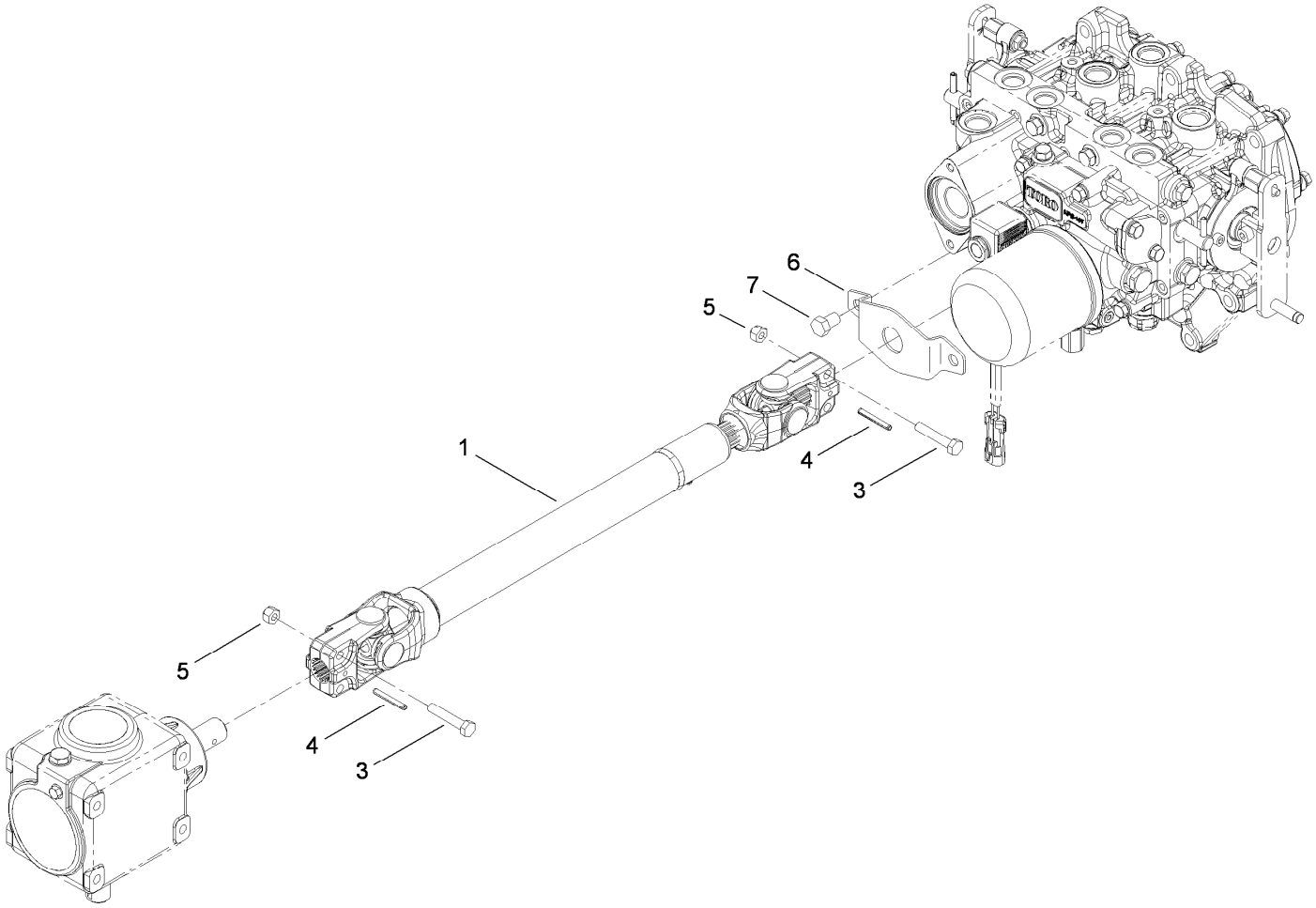

Driveshaft Assembly

Ref.	*Part Number*	*Qty.*	*Description*
1	110-3575	1	Driveshaft ASM
3	322-9	4	Screw-HH
4	32121-34	2	Pin-Roll
5	3296-29	4	Nut-Lock, NI
6	114-4088	1	Shield-Seal
7	33115-016	2	Screw-HH

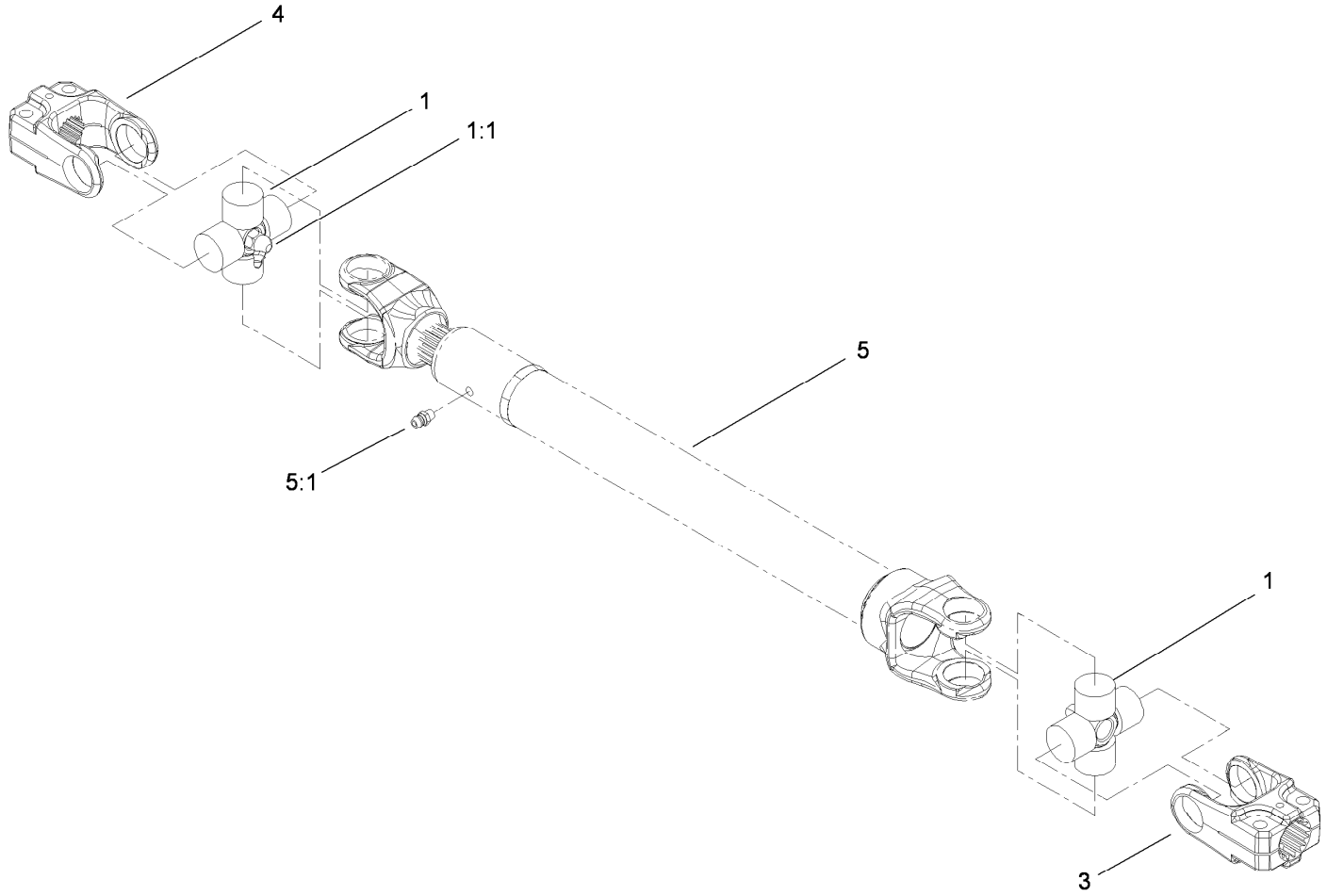

Driveshaft Assembly No. 110-3575

Ref.	*Part Number*	*Qty.*	*Description*
1	112-1687	2	Cross And Bearing Kit
1:1	62-3820	1	Fitting-Grease
3	54-9040	1	Yoke-End
4	54-9090	1	Yoke-End
5		1	Tube-Yoke, Slip ●
5:1	302-22	1	Fitting-Grease

● Not serviced separately

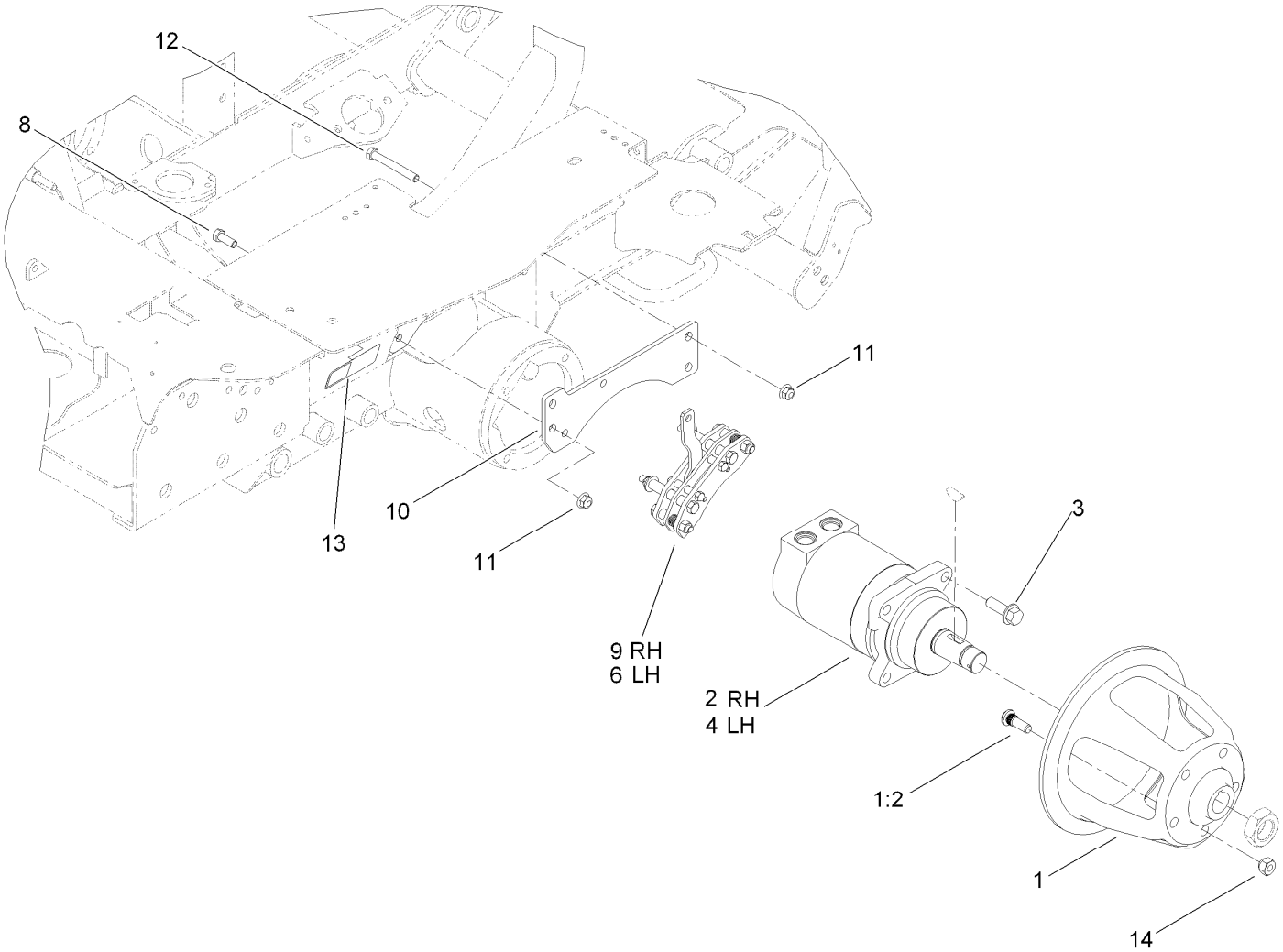

Rear Drive Assembly

Ref.	Part Number	Qty.	Description
1	110-5535	2	Wheel Hub ASM
1:2	87-8730	5	Stud
2	108-5230	1	RH HYD Motor ASM
3	100-6116	8	Screw-HHF
4	108-5155	1	LH HYD Motor ASM
6	120-0013	1	LH Brake Caliper ASM
6:1	120-0015	1	Replacement Brake Pad Service Kit ●■
8	323-6	4	Screw-HH
9	120-0014	1	RH Brake Caliper ASM
9:1	120-0015	1	Replacement Brake Pad Service Kit ●■
10	112-9550-03	2	Bracket-Brake
11	104-8301	8	Nut-Flange, NI
12	323-14	4	Screw-HH
13	106-9206	2	Decal-Torque, Wheel
14	23-7270	10	Nut-Wheel

● Not illustrated

■ Optional Equipment

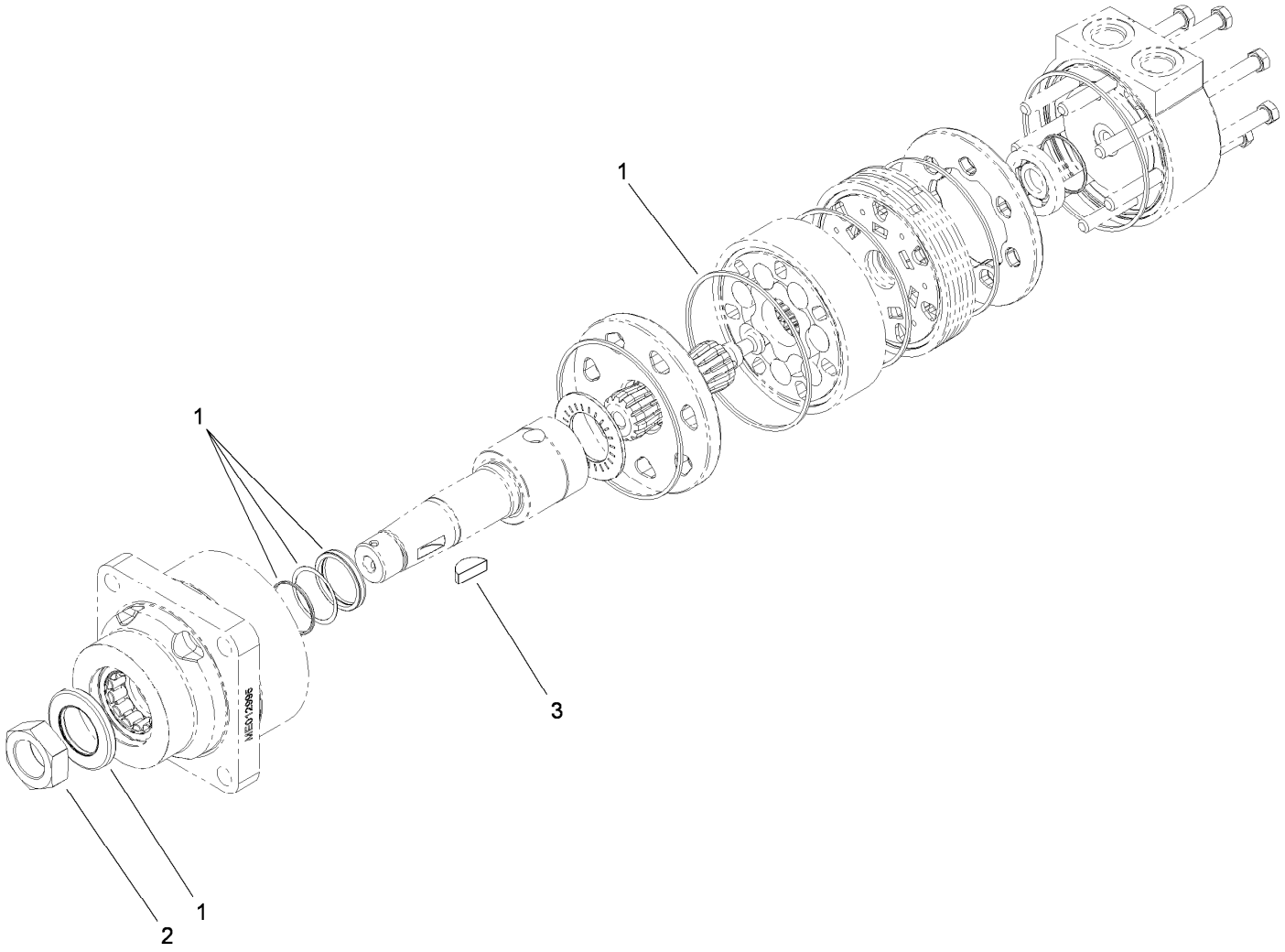

Hydraulic Motor Assembly No. 108-5230

Ref.	*Part Number*	*Qty.*	*Description*
1	112-8405	1	Seal Kit
2	107-9319	1	Nut-Hex
3	3257-42	1	Key-Woodruff

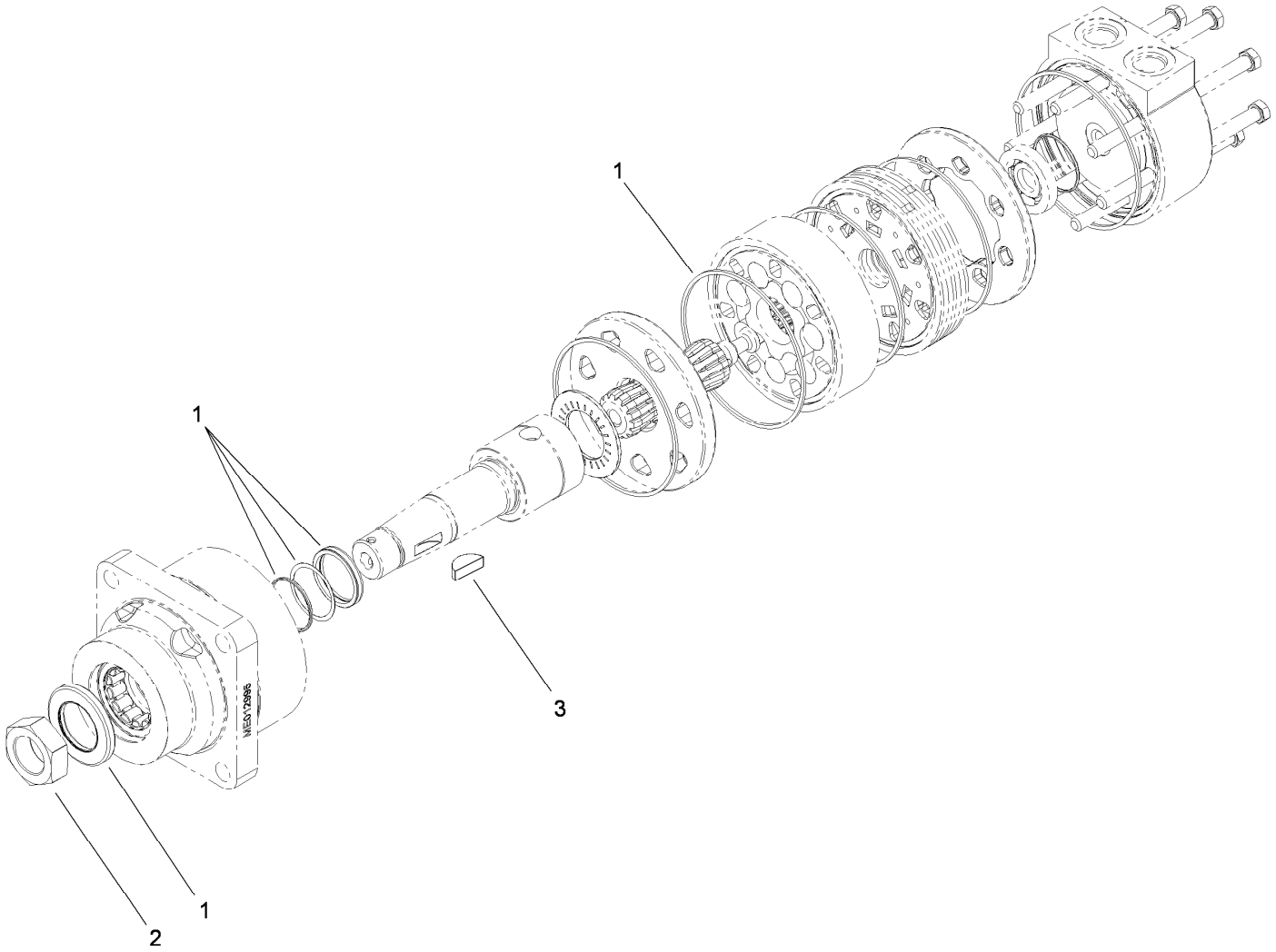

Hydraulic Motor Assembly No. 108-5155

Ref.	*Part Number*	*Qty.*	*Description*
1	112-8405	1	Seal Kit
2	107-9319	1	Nut-Hex
3	3257-42	1	Key-Woodruff

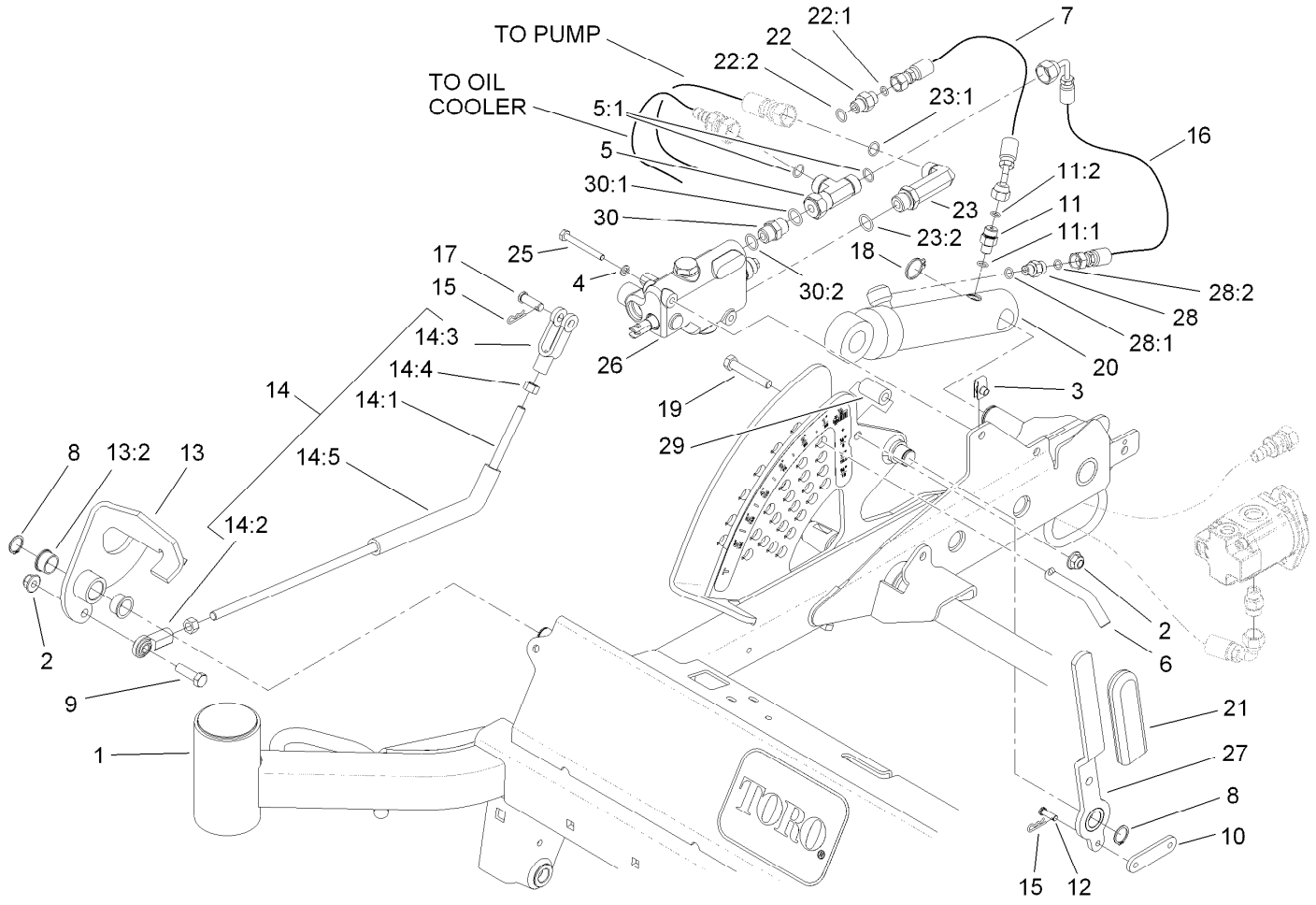

Carrier Frame and Valve Assembly

Ref.	Part Number	Qty.	Description
1	114-4087	1	Carrier Frame Kit ASM
2	104-8301	2	Nut-Flange, NI
3	107069	2	Clip
4	3253-3	2	Washer-Lock
5	340-104	1	Tee-Fitting
5:1	237-30	2	O-Ring
6	112-9544	1	Pin-HOC
7	110-8966	1	Hose ASM
8	32120-72	2	Ring-Snap
9	323-7	1	Screw-HH
10	114-4042	1	Link
11	95-1639	1	Fitting-HYD
11:1	237-78	1	O-Ring
11:2	237-21	1	O-Ring
12	1-808265	2	Pin-Clevis
13	112-9534	1	Pedal ASM
13:2	256-252	2	Bearing-Flange
14	112-9539	1	Link ASM
14:1	112-9535	1	Rod-Threaded
14:2	103-0608	1	Joint-Ball, End
14:3	1-633131	1	Yoke-Linkage, Brake
14:4	3219-3	2	Nut-Hex
14:5	114-4041	1	Hose-Foam
15	3290-307	3	Pin-Hair
16	117-9236	1	Hose ASM
17	283-2	1	Pin-Clevis
18	32151-36	1	Ring-Retaining
19	323-11	1	Screw-HH
20	110-9834	1	HYD Cylinder ASM
21	1-633268	1	Grip-Lever
22	340-1	1	Fitting-HYD, Straight (Adapter)
22:1	237-21	1	O-Ring
22:2	237-42	1	O-Ring
23	99-6160	1	Fitting-Elbow, 90 DEG
23:1	237-30	1	O-Ring
23:2	237-79	1	O-Ring
25	321-18	2	Screw-HH
26	117-9235	1	Valve ASM
27	114-4027-03	1	Lever ASM
28	340-92	1	Fitting-HYD, Straight
28:1	237-78	1	O-Ring

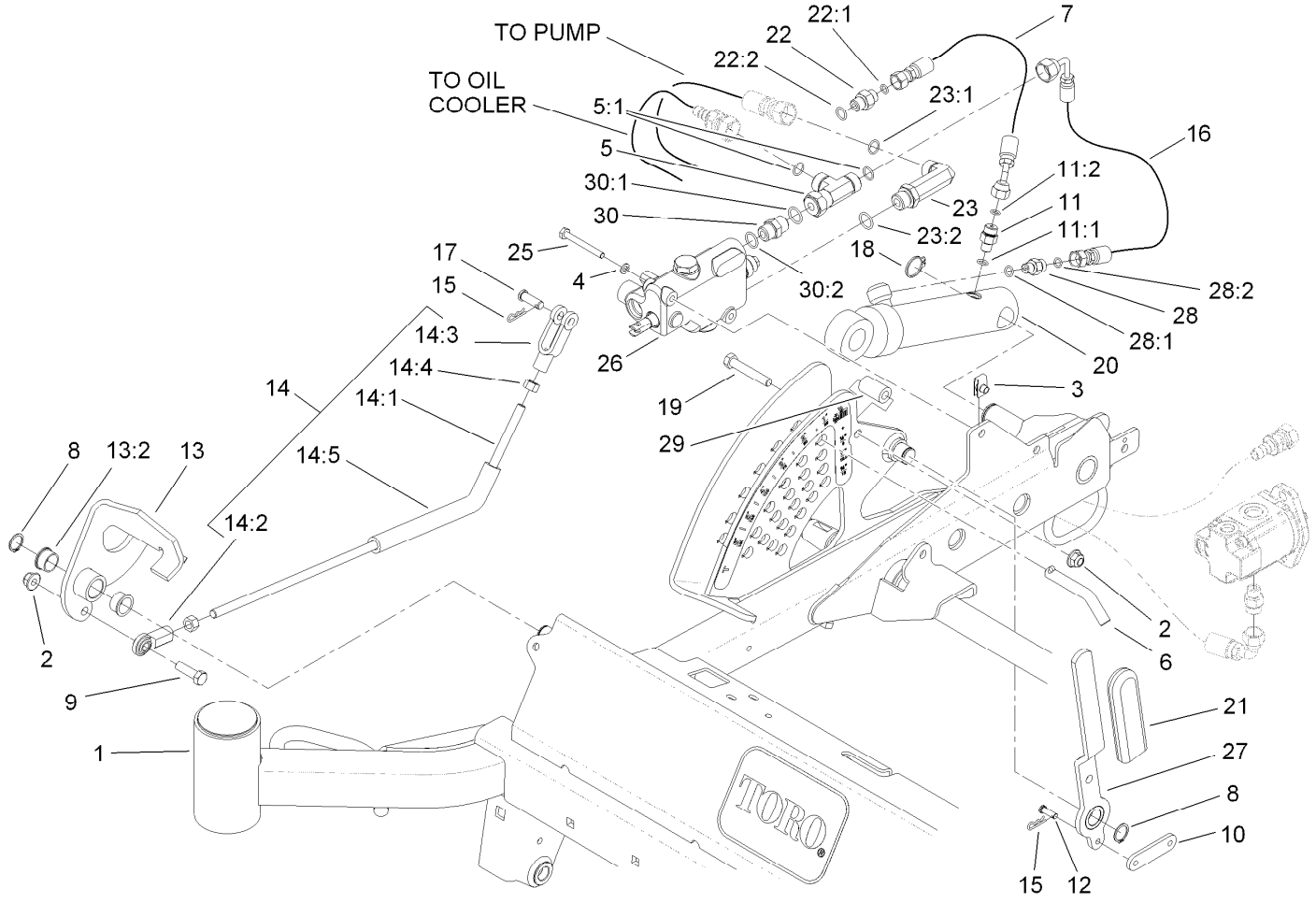

Carrier Frame and Valve Assembly (continued)

Ref.	Part Number	Qty.	Description
28:2	237-21	1	O-Ring
29	115-1425	1	Spacer
30	340-4	1	Fitting-HYD, Straight

Ref.	Part Number	Qty.	Description
30:1	237-30	1	O-Ring
30:2	237-79	1	O-Ring

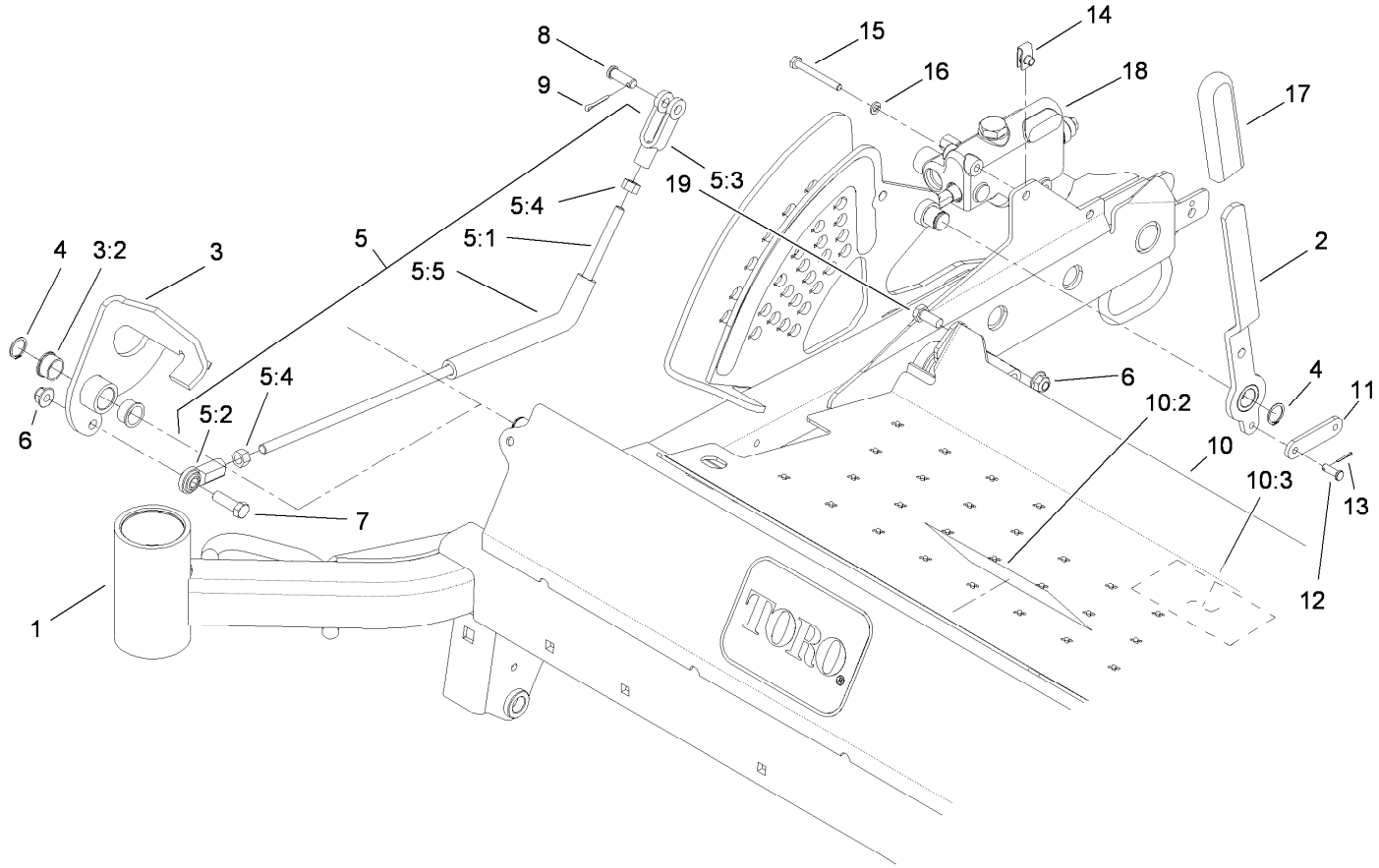

Carrier Frame Kit Assembly No. 114-4087

Ref.	Part Number	Qty.	Description
1		1	Carrier Frame ASM ●
2	114-4027-03	1	Lever ASM
3	112-9534	1	Pedal ASM
3:2	256-252	2	Bearing-Flange
4	32120-72	2	Ring-Snap
5	112-9539	1	Link ASM
5:1	112-9535	1	Rod-Threaded
5:2	103-0608	1	Joint-Ball, End
5:3	1-633131	1	Yoke-Linkage, Brake
5:4	3219-3	2	Nut-Hex
5:5	114-4041	1	Hose-Foam
6	104-8301	3	Nut-Flange, NI
7	323-7	1	Screw-HH
8	283-2	1	Pin-Clevis
9	3272-10	1	Pin-Cotter
10	114-4048	1	Floor Plate ASM
10:2	107-1866	1	Decal-Danger, Slope
10:3	112-1461	1	Decal-Routing, Belt
11	114-4042	1	Link
12	1-808265	2	Pin-Clevis
13	3272-1	2	Pin-Cotter
14	107069	2	Clip
15	321-18	2	Screw-HH
16	3253-3	2	Washer-Lock
17	1-633268	1	Grip-Lever
18	117-9235	1	Valve ASM
19	323-5	2	Screw-HH

● Not serviced separately

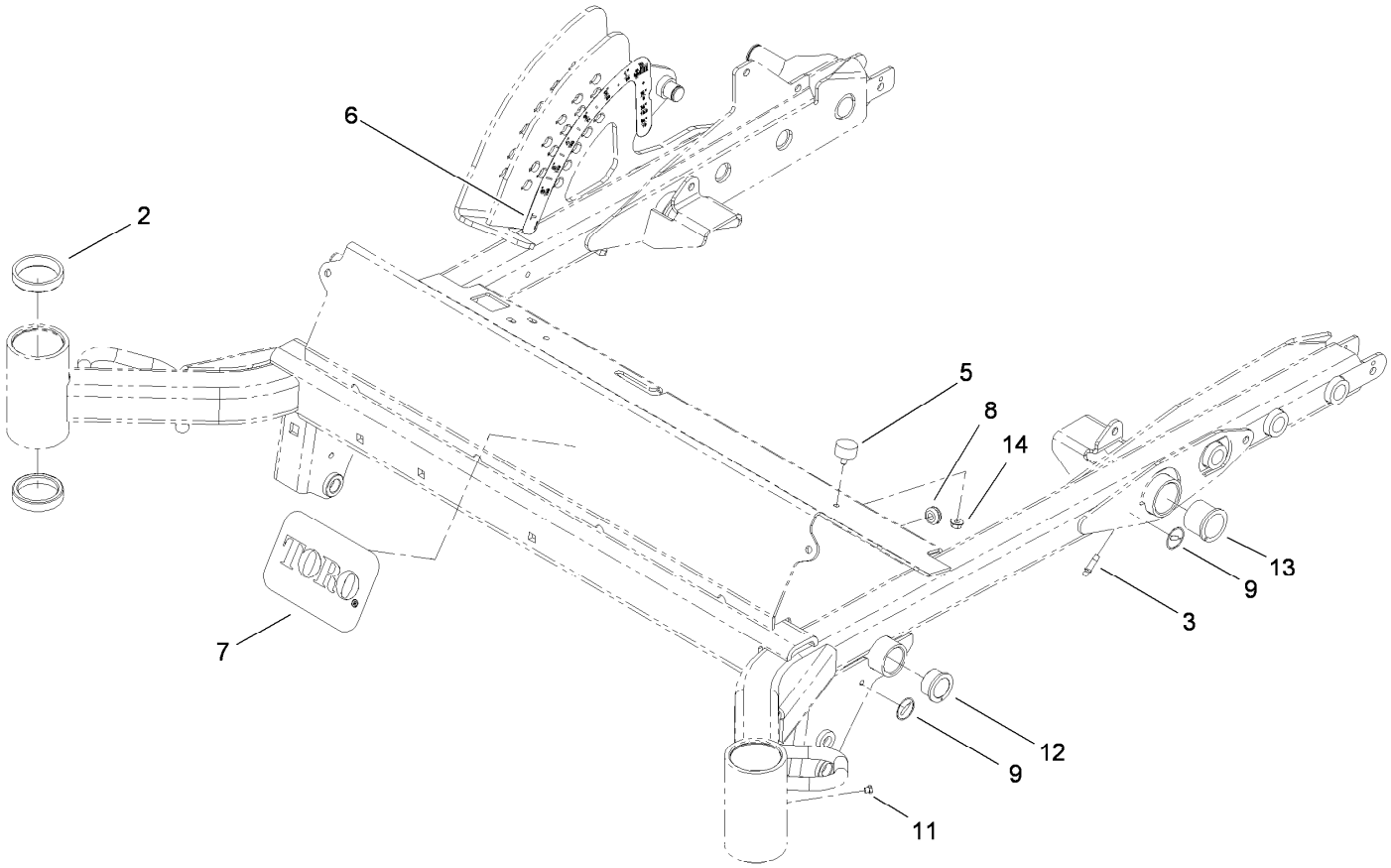

Carrier Frame Assembly

Ref.	Part Number	Qty.	Description
2	254-107	4	Cup-Bearing, Tapered
3	302-64	2	Fitting-Grease
5	240-14	4	Bumper-Rubber
6	112-1620	1	Decal-HOC
7	99-4693	1	Decal
8	237-141	1	Grommet-Rubber
9	58-6520	4	Decal-Grease
11	1-811010	2	Plug
12	94-7574	2	Bushing-Flanged
13	256-268	2	Bushing
14	104-7201	4	Nut-HF

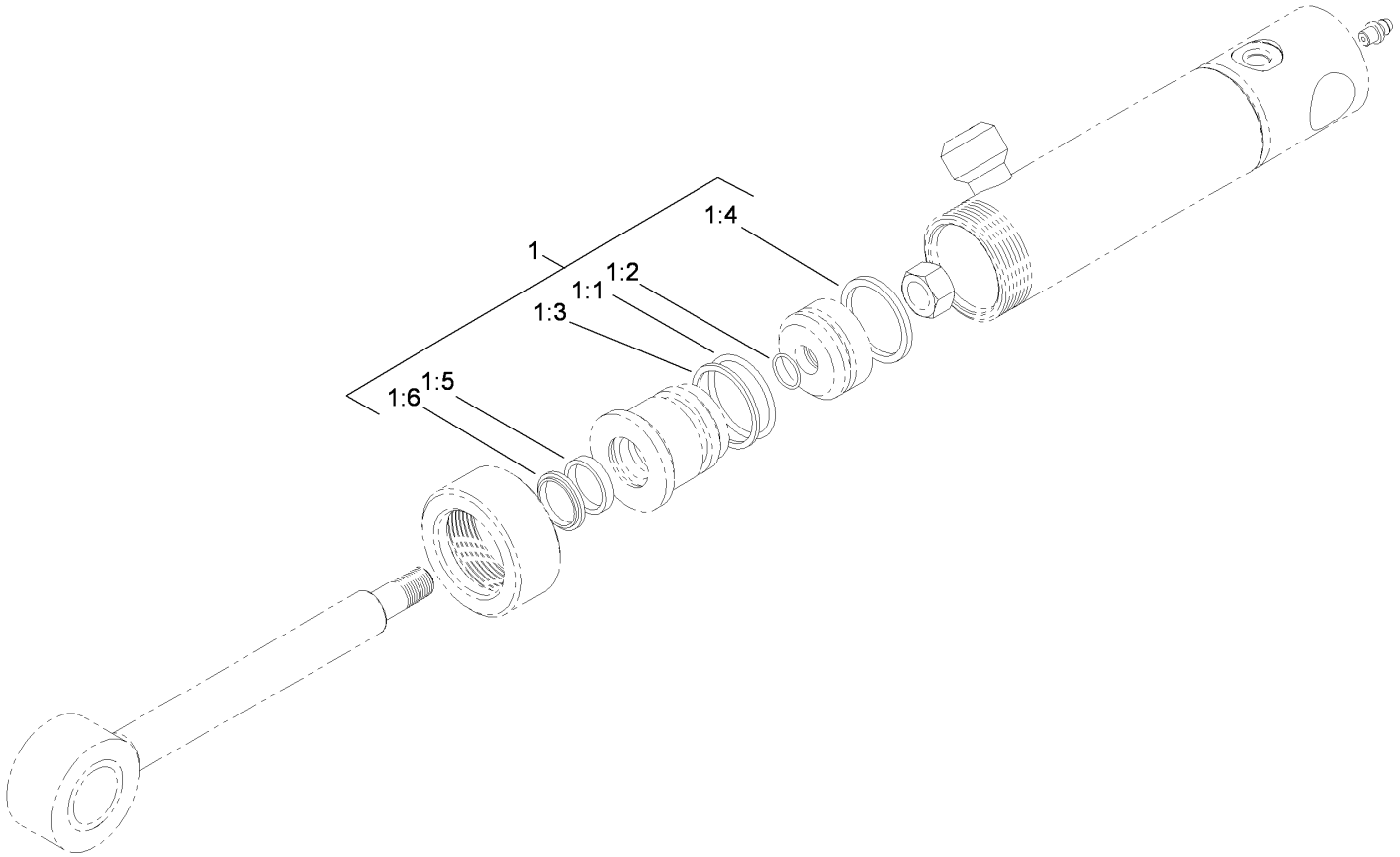

Hydraulic Cylinder Assembly No. 110-9834

Ref.	*Part Number*	*Qty.*	*Description*
1	112-6353	1	Seal Kit
1:1		1	O-Ring ●
1:2		1	O-Ring ●
1:3		1	Backup ●
1:4		1	Seal-Bp ●
1:5		1	Seal-Rod ●
1:6		1	Seal-Dust ●

● Not serviced separately

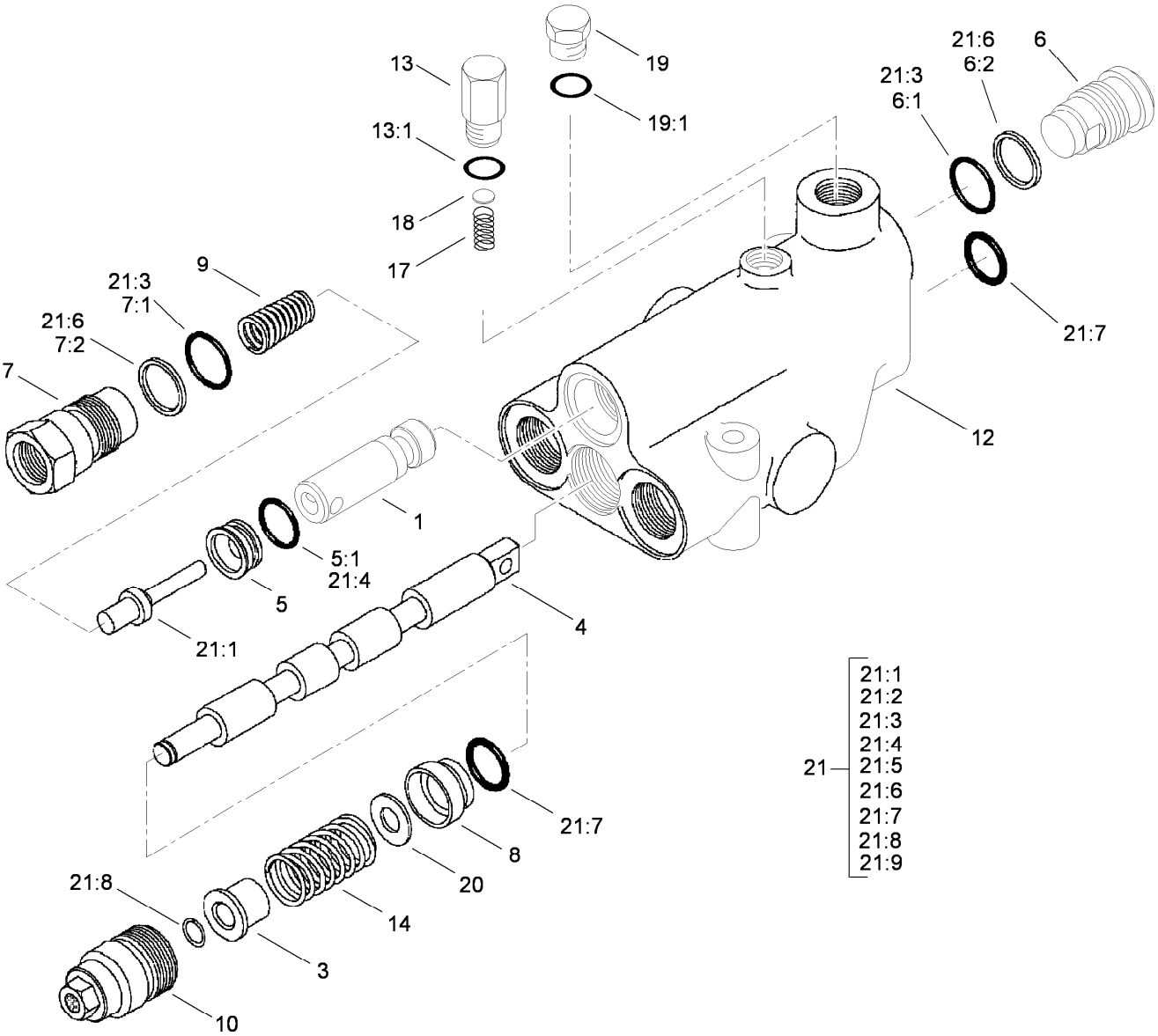

Hydraulic Valve Assembly No. 117-9235

Ref.	Part Number	Qty.	Description
1	99-3586	1	Plunger
3	58-6310	1	Spacer
4		1	Spool ■
5	58-6330	1	Seat
5:1	58-6340	1	O-Ring
6	58-6350	1	Plug
6:1	60-5720	1	O-Ring
6:2	58-6370	1	Washer
7	69-1800	1	Plug ASM
7:1	60-5720	1	O-Ring
7:2	58-6370	1	Washer
8	58-6400	1	Bushing
9	69-1810	1	Spring
10	58-6420	1	Cap
12		1	Body ■
13	58-6780	1	Plug
13:1	58-6790	1	O-Ring

Ref.	Part Number	Qty.	Description
14	99-3531	1	Spring
17	58-6760	1	Spring
18	60-6450	1	Disc
19	58-6710	1	Plug
19:1	58-6720	1	O-Ring
20	65-2770	1	Washer
21	99-3589	1	Seal Kit ●
21:1	58-6290	2	Poppet
21:2	58-6320	1	Wiper
21:3	60-5720	2	O-Ring
21:4	58-6340	2	O-Ring
21:5	93-6314	1	O-Ring
21:6	58-6370	2	Washer
21:7	58-6450	2	O-Ring
21:8	58-6460	1	Ring-Retaining
21:9		1	O-Ring ■

● Not illustrated

■ Not serviced separately

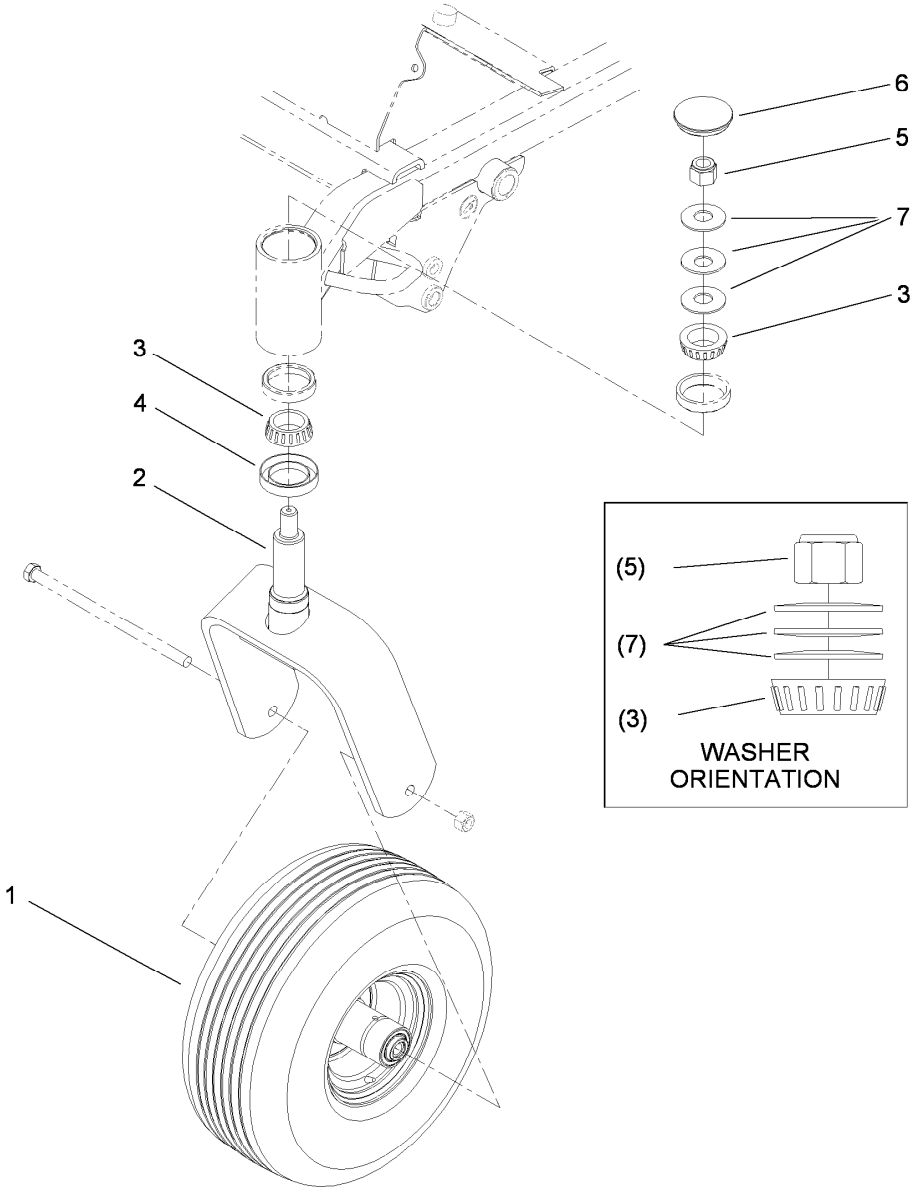

Caster Fork Assembly

Ref.	*Part Number*	*Qty.*	*Description*
1	108-9954	2	Caster Wheel ASM
2	108-9946-03	2	Fork-Caster
3	254-106	4	Cone-Bearing, Tapered
4	69-2980	2	Seal
5	3296-51	2	Nut-Lock, NI
6	108-9950	2	Cap-Grease
7	108-9957	6	Washer-Belleville

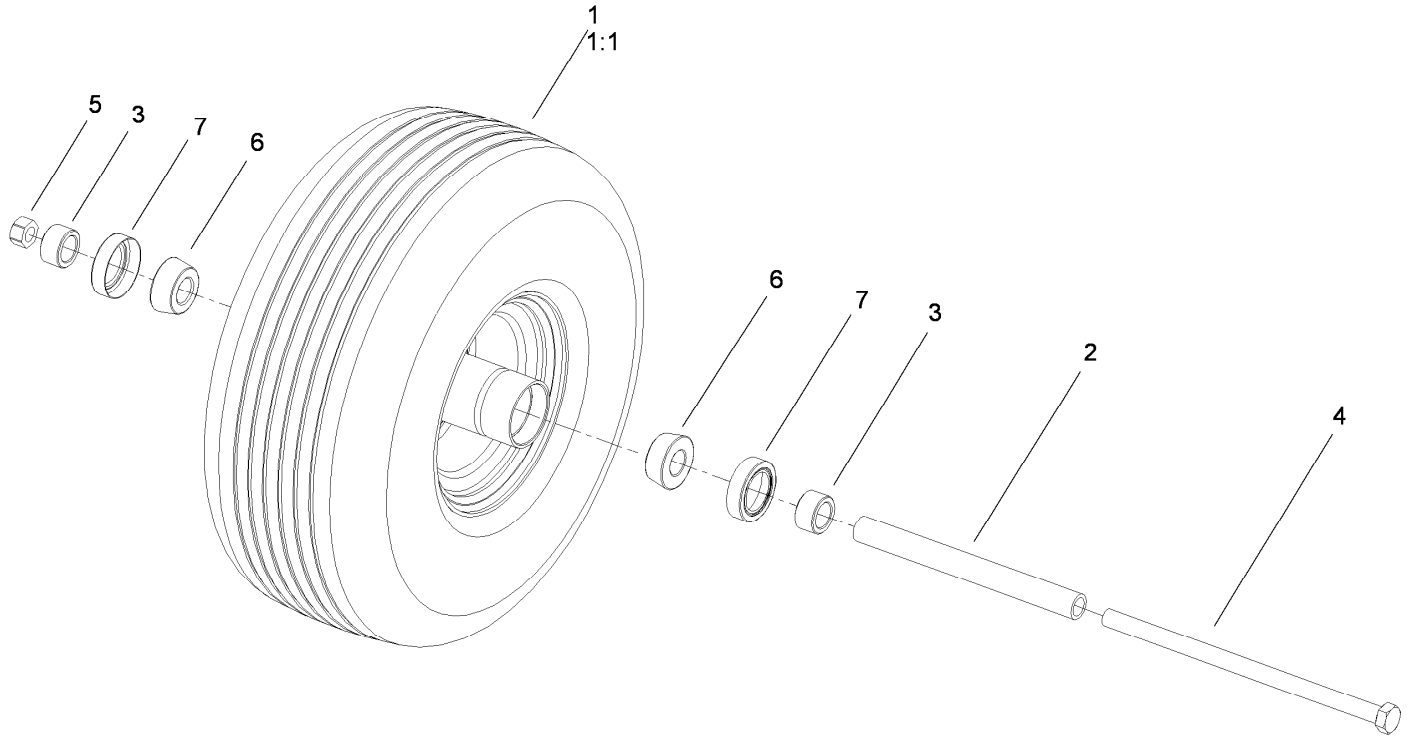

Caster Wheel Assembly No. 108-9954

Ref.	*Part Number*	*Qty.*	*Description*
1	108-9956	1	Tire And Wheel ASM
1:1	108-9955	1	Tire
2	1-633959	1	Spacer-Caster, Front
3	1-633581	2	Spacer-Bearing
4	325-39	1	Screw-HH
5	3296-25	1	Nut-Lock, NI
6	1-633585	2	Bearing-Cone, Taper
7	1-633580	2	Seal-Bearing

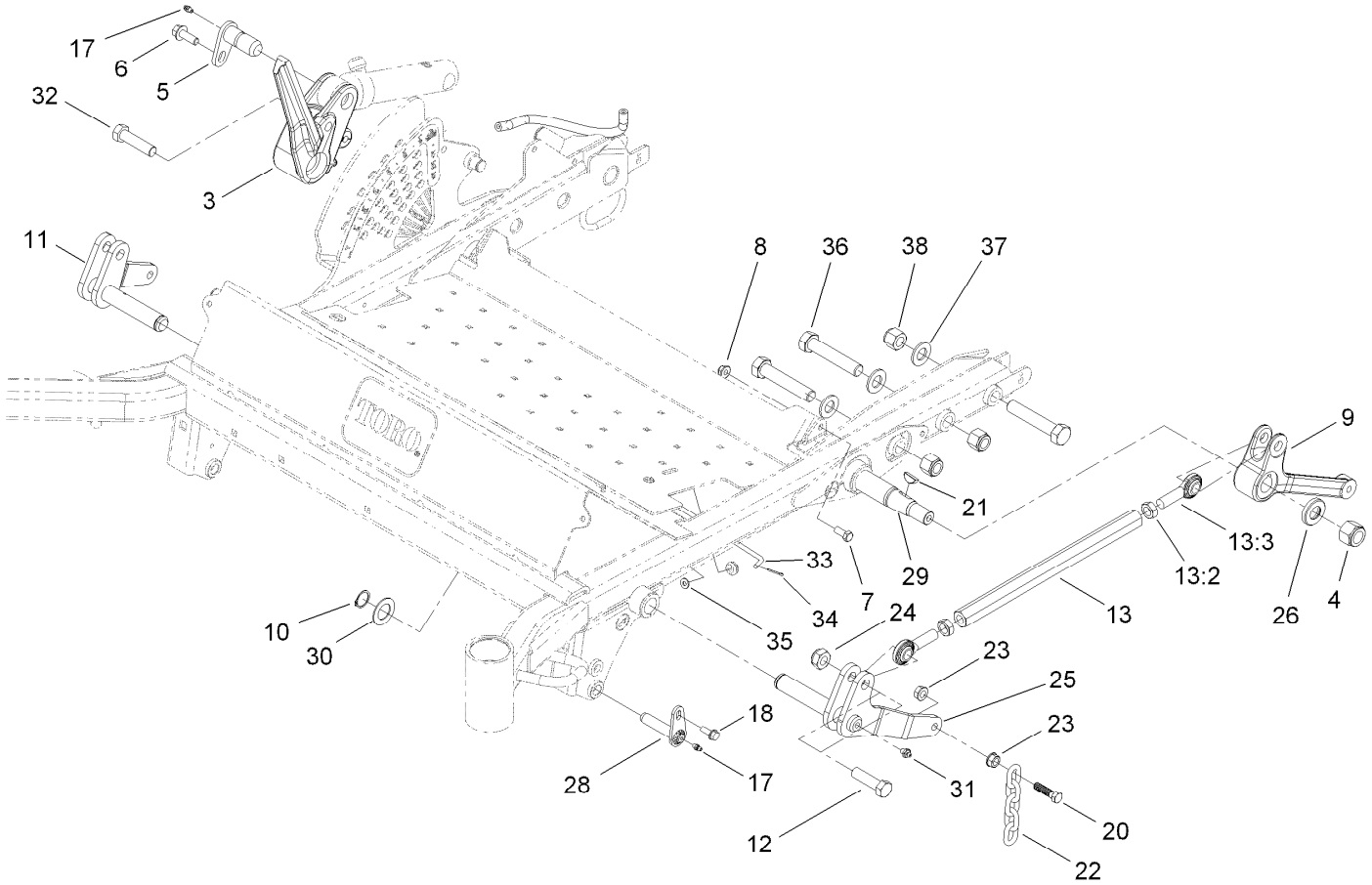

Deck Linkage Assembly

Ref.	Part Number	Qty.	Description
3	112-1635	1	Arm-Lift, RH
4	94-8000	2	Nut-Hex
5	98-2654	1	Pivot Pin ASM
6	3234-15	1	Screw-HHF
7	323-5	2	Screw-HH
8	104-8301	2	Nut-Flange, NI
9	112-1637	1	Arm-Lift, LH
10	32151-29	2	Ring-Retaining
11	110-9820-03	1	RH Lift ASM
12	327-22	3	Screw-HH
13	114-4059	2	Link ASM
13:2	3220-6	2	Nut-Jam
13:3	1-633029	2	Balljoint-Spherical
17	302-5	3	Fitting-Grease
18	32144-41	2	Screw-Taptite
20	103-1898	4	Screw-HH
21	3257-42	2	Key-Woodruff

Ref.	Part Number	Qty.	Description
22	1-633447	4	Chain-Lift, Deck
23	32128-37	6	Nut-HF
24	3296-61	3	Nut-Lock
25	110-9818-03	1	LH Lift ASM
26	112-9585	2	Washer-Hardened
28	112-1602	2	Pin-Retainer
29	112-9522-03	1	Shaft-Lift, Deck
30	69-9010	2	Washer
31	302-2	2	Fitting-Grease
32	327-7	1	Screw-HH
33	110-9847	1	Rod-Prop
34	3272-6	1	Pin-Cotter
35	3256-22	1	Washer-Flat
36	328-7	5	Screw-HH
37	92-5836	5	Washer
38	3296-51	5	Nut-Lock, NI

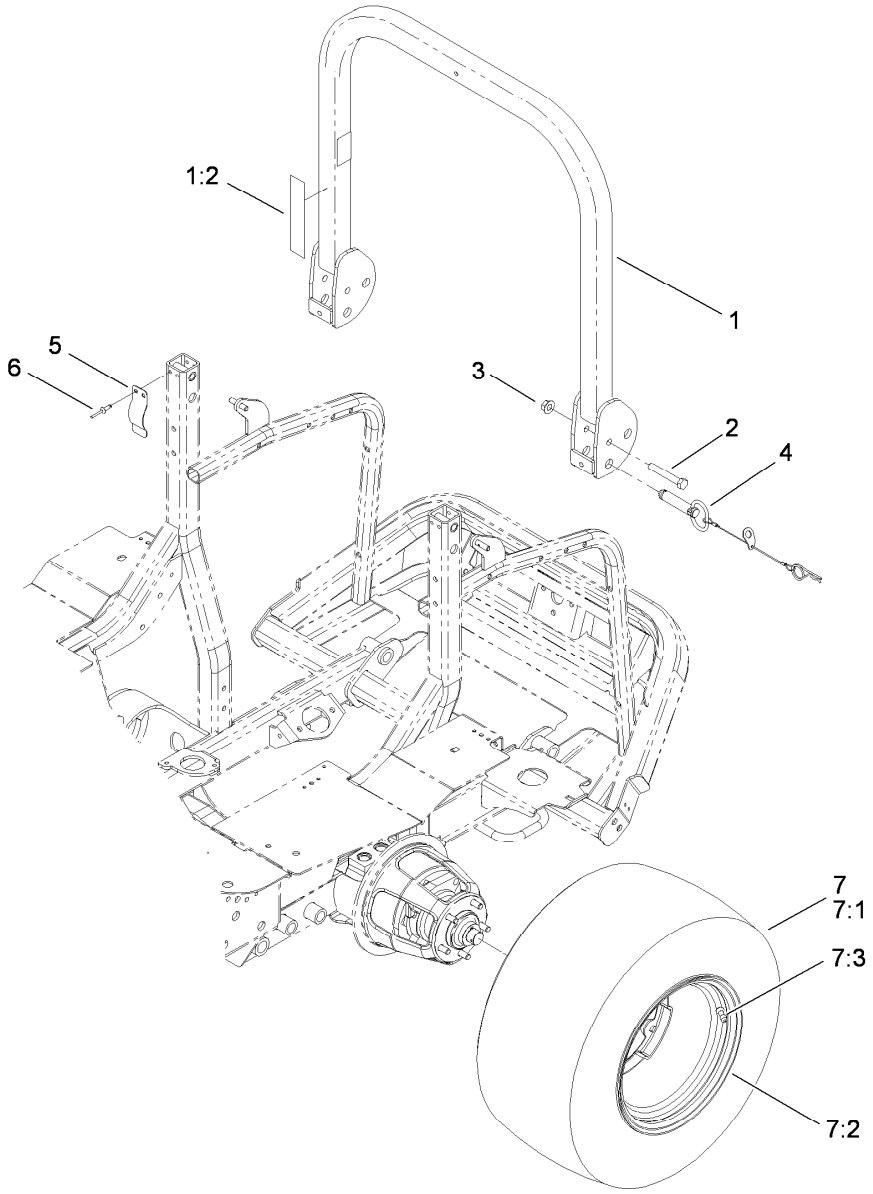

Roll-Over and Protection System and Rear Wheel Assembly

Ref.	*Part Number*	*Qty.*	*Description*
1	110-9770	1	Upper ROPS ASM
1:2	107-3069	1	Decal-Warning, Folding ROPS
2	325-13	2	Screw-HH
3	32128-23	2	Nut-HF
4	103-4553	2	ROPS Fold Pin ASM
5	110-5696	2	Spring-Leaf
6	3290-412	4	Rivet
7	106-7864	2	Tire And Wheel ASM
7:1	106-7868	1	Tire
7:2	87-6750	1	Wheel
7:3	232-27	1	Stem-Valve

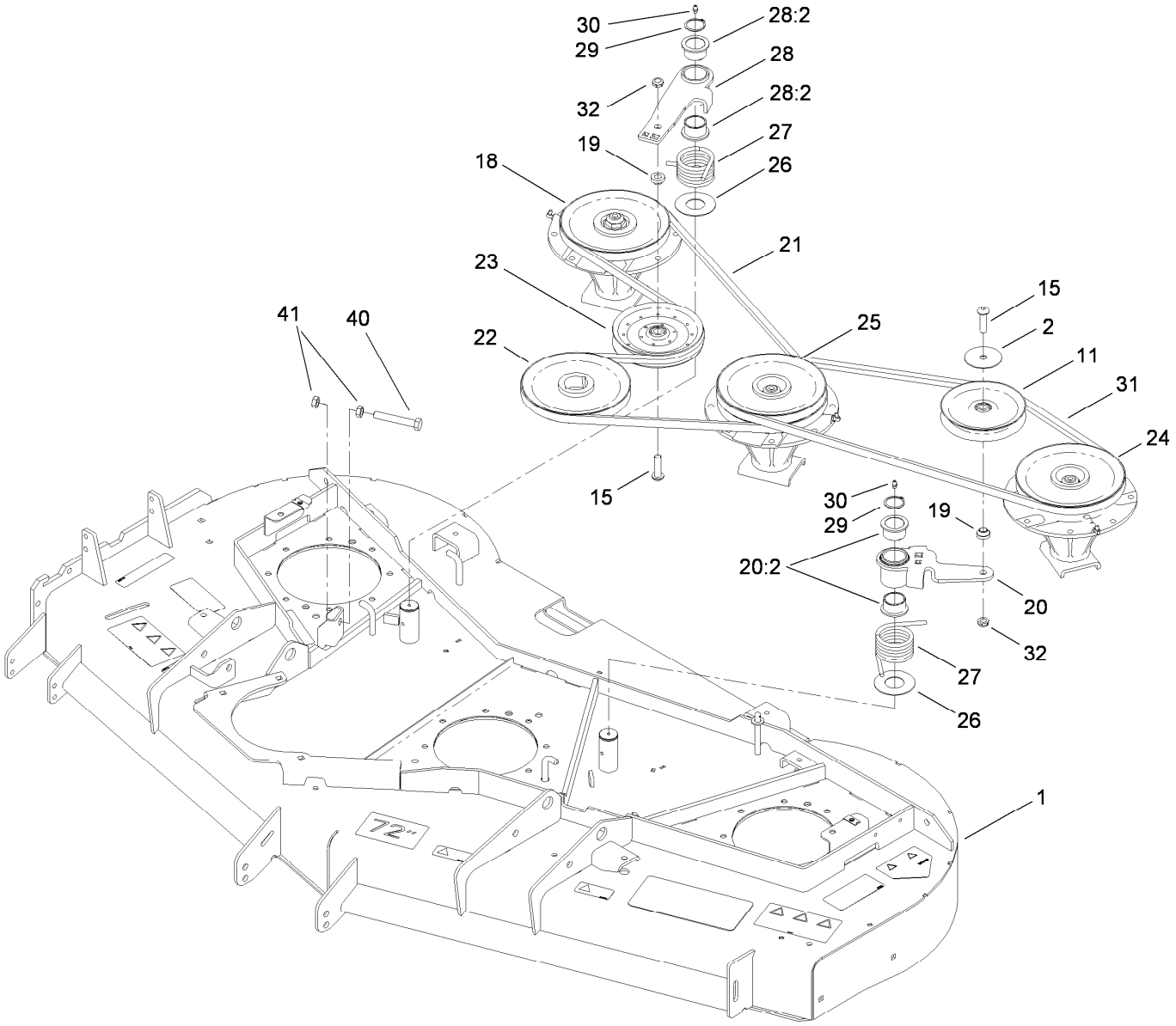

Deck Spindle, Belt and Pulley Assembly

Ref.	Part Number	Qty.	Description
1	108-9901	1	Deck ASM
2	100-3102	1	Washer-Flat
11	01-268-0160	1	Pulley-Idler
15	108-1993	2	Screw-HSBH
18	119-4778	1	Spindle ASM
19	108-1924	2	Spacer-Idler
20	117-9176	1	Idler Arm ASM
20:2	93-4510	2	Bushing-Caster
21	110-9592	1	Belt - V
22	107-4725	1	Pulley
23	110-9596	1	Pulley-Idler
24	117-9233	1	High Spindle ASM

Ref.	Part Number	Qty.	Description
25	117-9234	1	Double Spindle ASM
26	108-1926	2	Washer
27	108-1921	2	Spring-Torsion
28	108-1930	1	Idler Arm ASM
28:2	93-4510	2	Bushing-Caster
29	32120-84	2	Ring-Snap, External
30	302-5	2	Fitting-Grease
31	110-9591	1	Belt-V
32	3296-45	2	Nut-Lock, NI
40	325-14	1	Screw-HH
41	3218-5	2	Nut-Jam

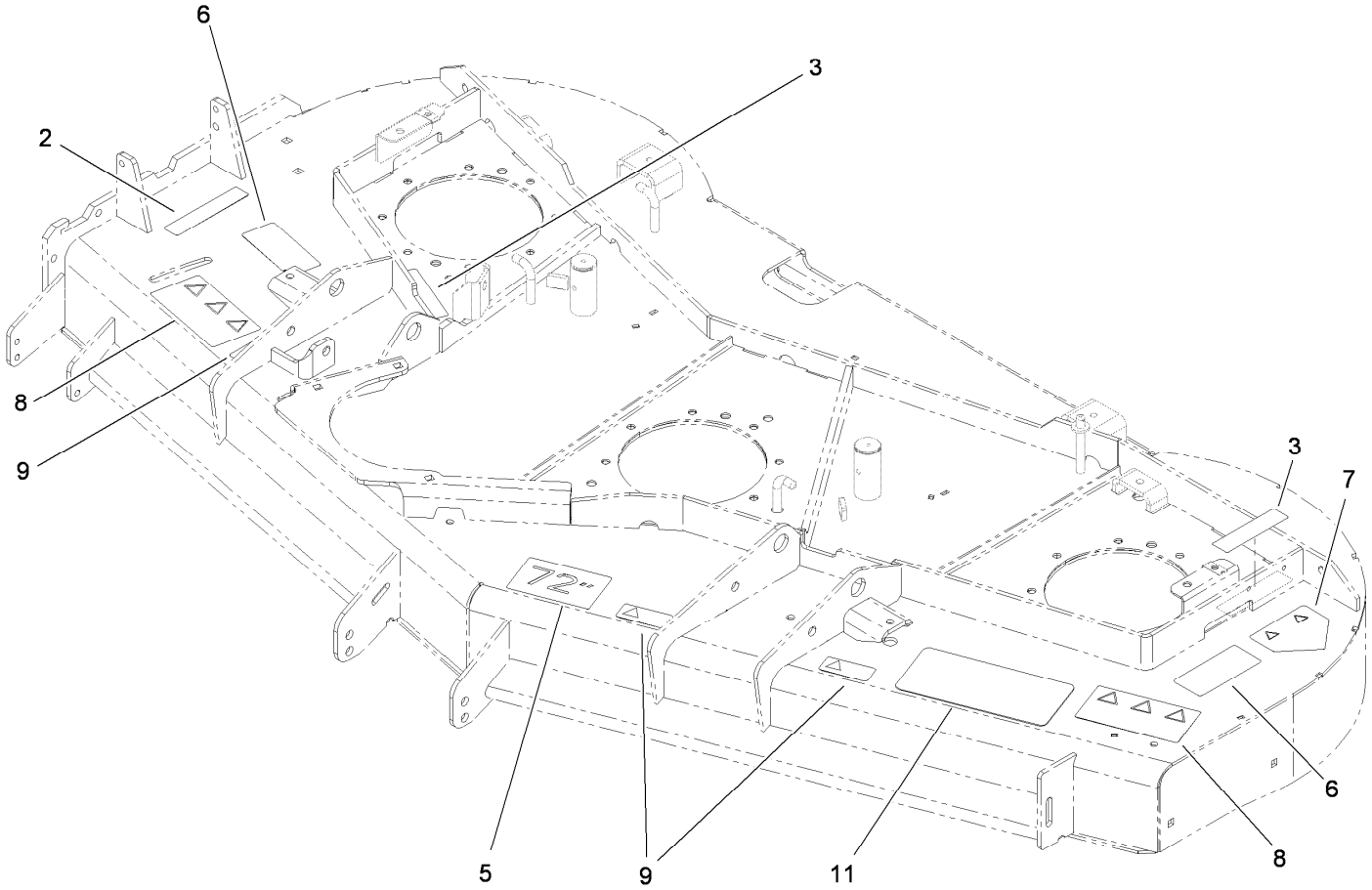

Deck Decal Assembly No. 108-9901

Ref.	*Part Number*	*Qty.*	*Description*
2	107-2916	1	Decal-Warning
3	100-6578	2	Decal-Danger
5	57-0280	1	Decal
6	93-7818	2	Decal-Torque, Blade Bolt
7	106-6753	1	Decal-Danger, Ce
8	107-2908	2	Decal-Danger, Combination
9	93-6696	3	Decal-Warning
11	110-0988	1	Tread-Floor, Side

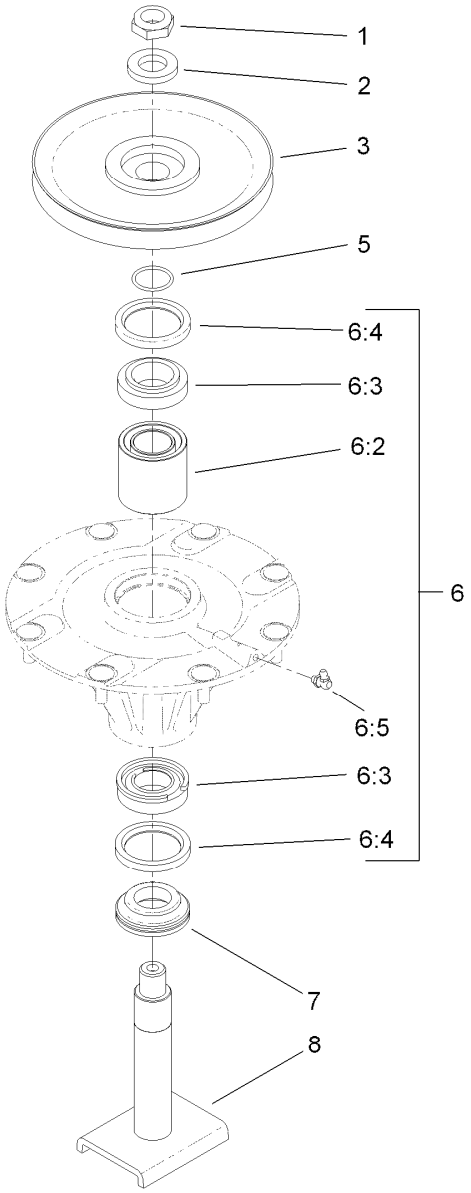

Spindle Assembly No. 119-4778

Ref.	*Part Number*	*Qty.*	*Description*
1	3296-60	1	Nut-Lock, NI
2	104-8322	1	Washer-Hardened
3	104-3546	1	Pulley-Driven, Low
5	106-7159	1	O-Ring
6	119-4777	1	Spindle ASM
6:2	108-1954	1	Spacer Set-Bearing
6:3	110-8297	1	Bearing ASM
6:4	253-154	2	Seal-Oil
6:5	302-60	1	Fitting-Grease
7	69-6950	1	Spacer-Shaft, Spindle
8	108-1956	1	Shaft ASM

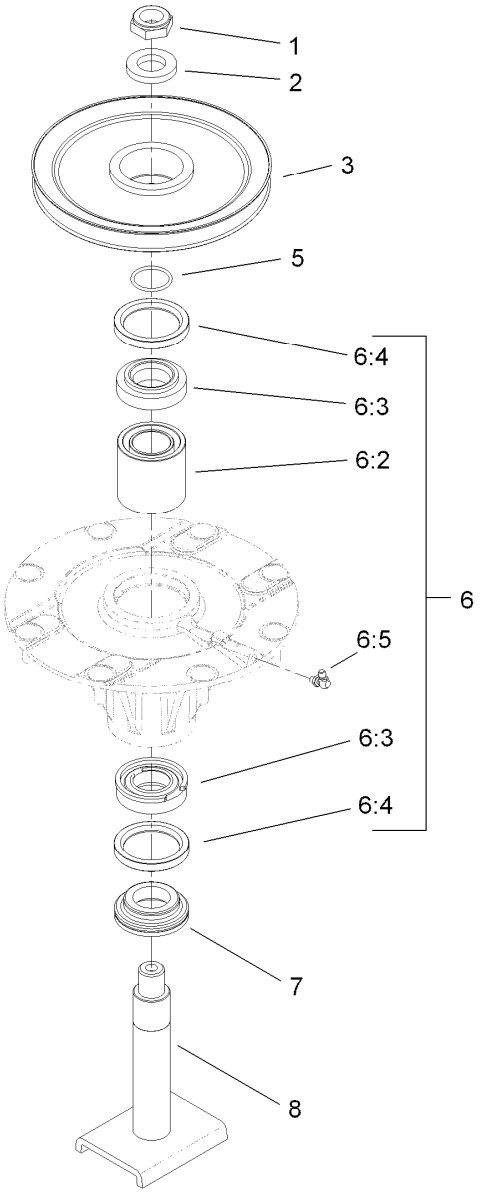

High Spindle Assembly No. 117-9233

Ref.	*Part Number*	*Qty.*	*Description*
1	3296-60	1	Nut-Lock, NI
2	104-8322	1	Washer-Hardened
3	104-3548	1	Pulley-Driven, High
5	106-7159	1	O-Ring
6	119-4777	1	Spindle ASM
6:2	108-1954	1	Spacer Set-Bearing
6:3	110-8297	1	Bearing ASM
6:4	253-154	2	Seal-Oil
6:5	302-60	1	Fitting-Grease
7	69-6950	1	Spacer-Shaft, Spindle
8	108-1956	1	Shaft ASM

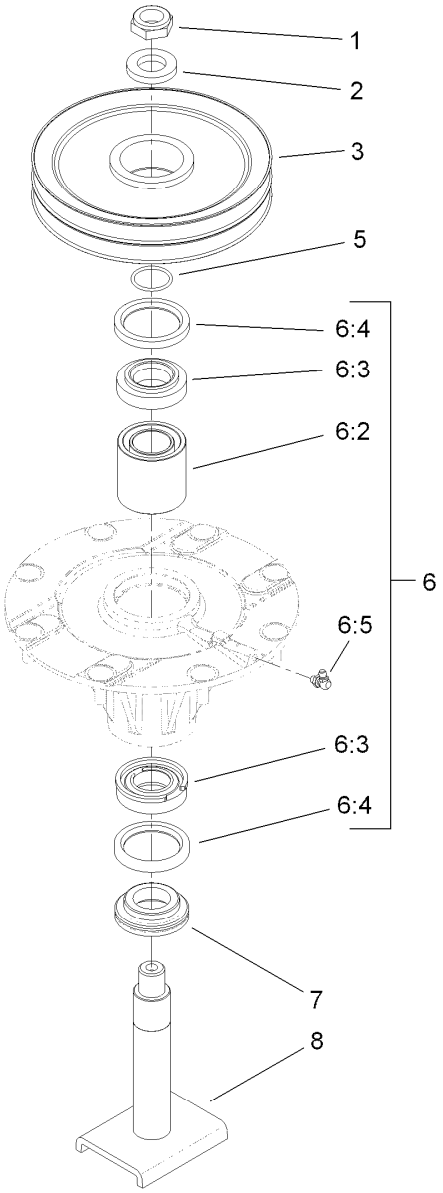

Double Spindle Assembly No. 117-9234

Ref.	*Part Number*	*Qty.*	*Description*
1	3296-60	1	Nut-Lock, NI
2	104-8322	1	Washer-Hardened
3	104-3547	1	Pulley-Driven, Double
5	106-7159	1	O-Ring
6	119-4777	1	Spindle ASM
6:2	108-1954	1	Spacer Set-Bearing
6:3	110-8297	1	Bearing ASM
6:4	253-154	2	Seal-Oil
6:5	302-60	1	Fitting-Grease
7	69-6950	1	Spacer-Shaft, Spindle
8	108-1956	1	Shaft ASM

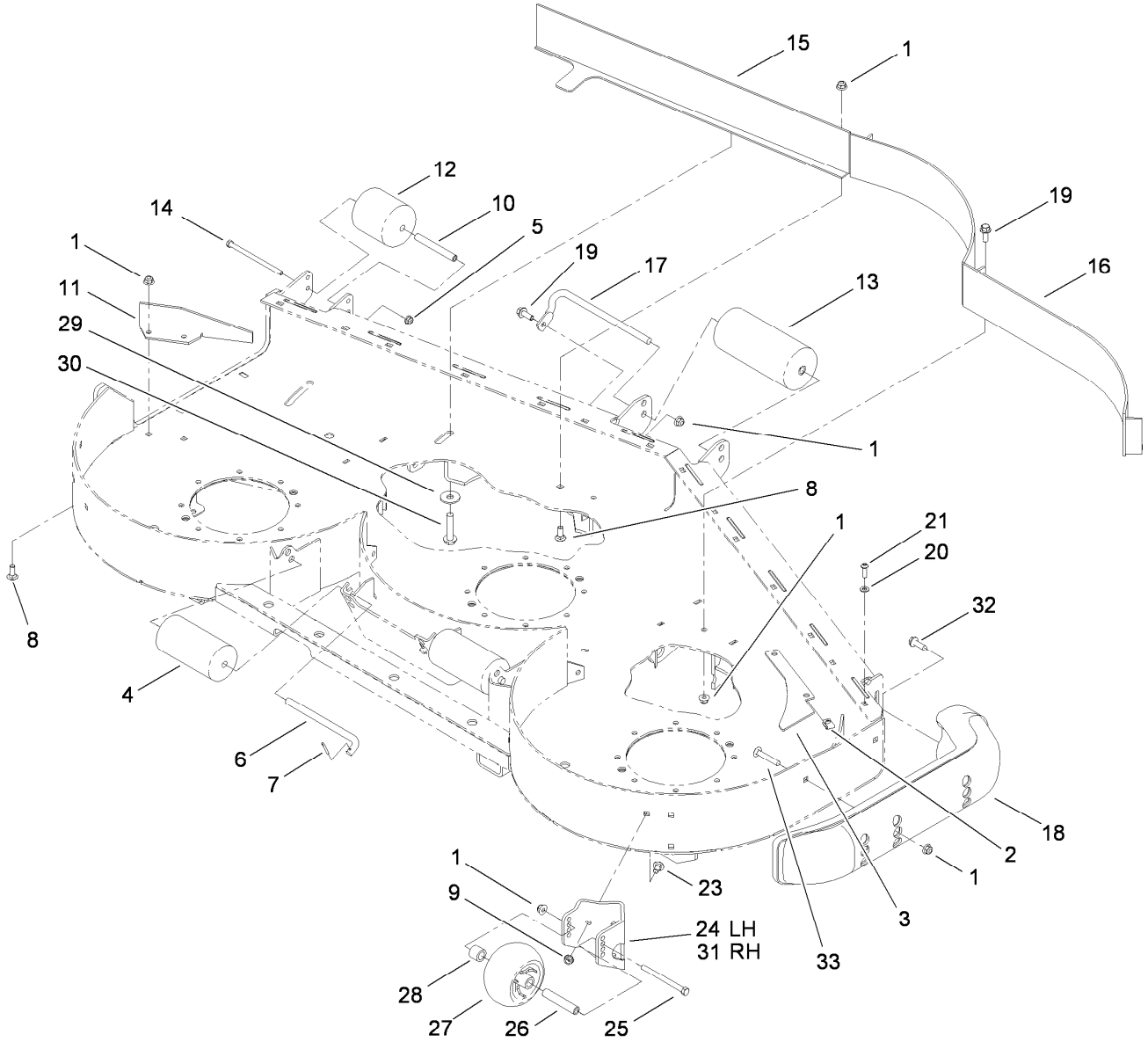

Roller and Baffle Assembly

Ref.	Part Number	Qty.	Description
1	104-8301	11	Nut-Flange, NI
2	112-3306	2	Nut
3	115-1396	1	Plate-Turbo
4	36-1740	2	Roller-Deck
5	104-8300	1	Nut-Flange, NI
6	40-0340	2	Shaft-Roller, Rear
7	3272-11	2	Pin-Cotter
8	3231-2	3	Screw-CARR
9	3290-357	6	Nut-HHF, Whiz
10	105-4549	1	Spacer-Roller
11	106-3216-01	1	Baffle-Discharge
12	93-4803	1	Roller-Deck
13	68-6710	1	Roller
14	322-49	1	Bolt-HH
15	105-7669-01	1	Baffle ASM
16	105-7730-01	1	Baffle ASM

Ref.	Part Number	Qty.	Description
17	68-6840	1	Shaft-Roller
18	112-1479	1	Skid-Bumper, Deck
19	3234-42	4	Screw-HHF
20	3256-23	2	Washer-Flat
21	3274-104	2	Screw-HSBH
23	3231-1	6	Screw-CARR
24	106-7354-01	1	Mount-Wheel, LH
25	323-23	2	Screw-HH
26	98-7912	2	Tube-Spanner
27	1-603299	2	Roller-Scalp, Anti
28	98-7913	2	Tube-Spacer
29	105-7697	2	Washer-Plastic
30	3234-46	2	Screw-HHF
31	106-7355-01	1	Mount-Wheel, RH
32	9136144	1	Screw-HWHTF
33	3231-33	2	Screw-CARR

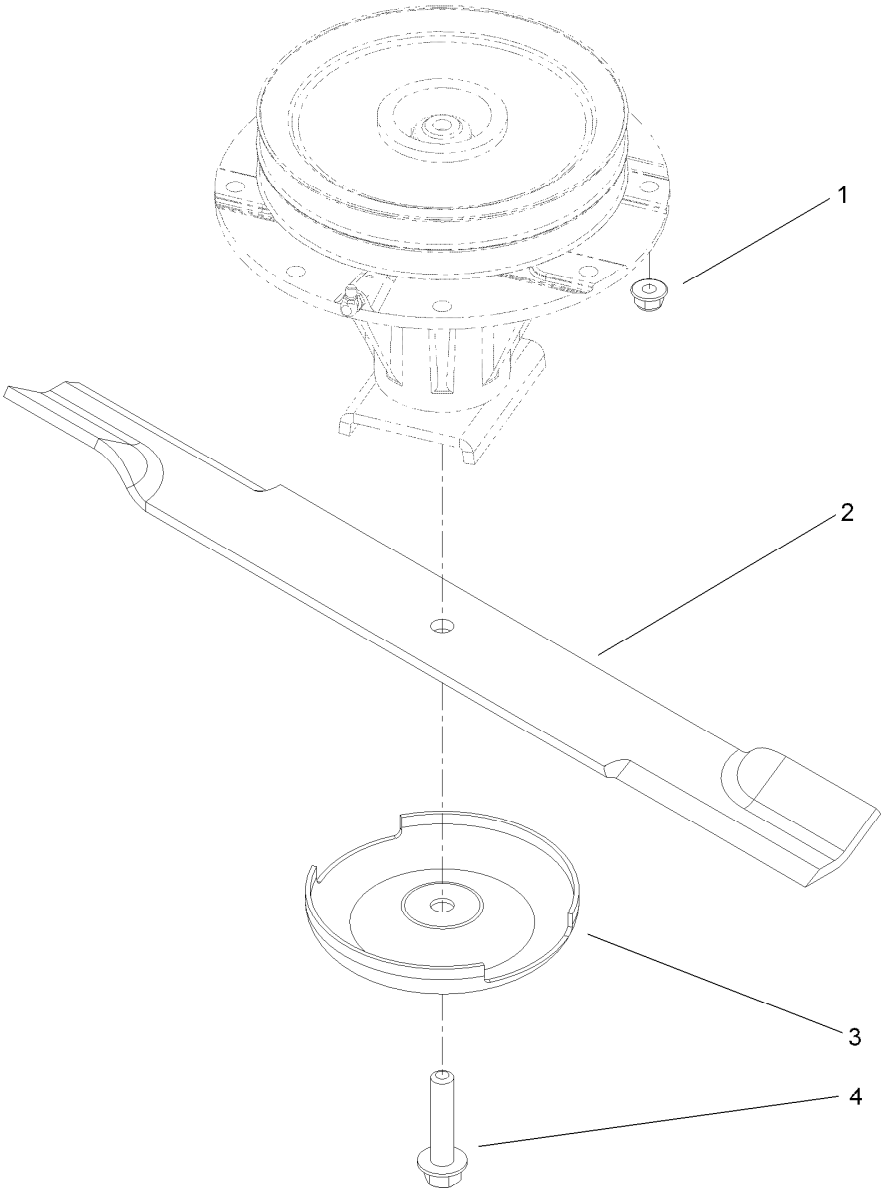

Blade Assembly

Ref.	Part Number	Qty.	Description
1	104-8301	24	Nut-Flange, NI
2	110-0621-03	3	Blade-Rotary, Med. Flow (24.5)
2	110-0624-03	3	Blade-Rotary, Atomic (24.5) ●
3	72-9361	3	Cup-Scalp, Anti
4	92-5816	3	Bolt-Blade

● Not illustrated

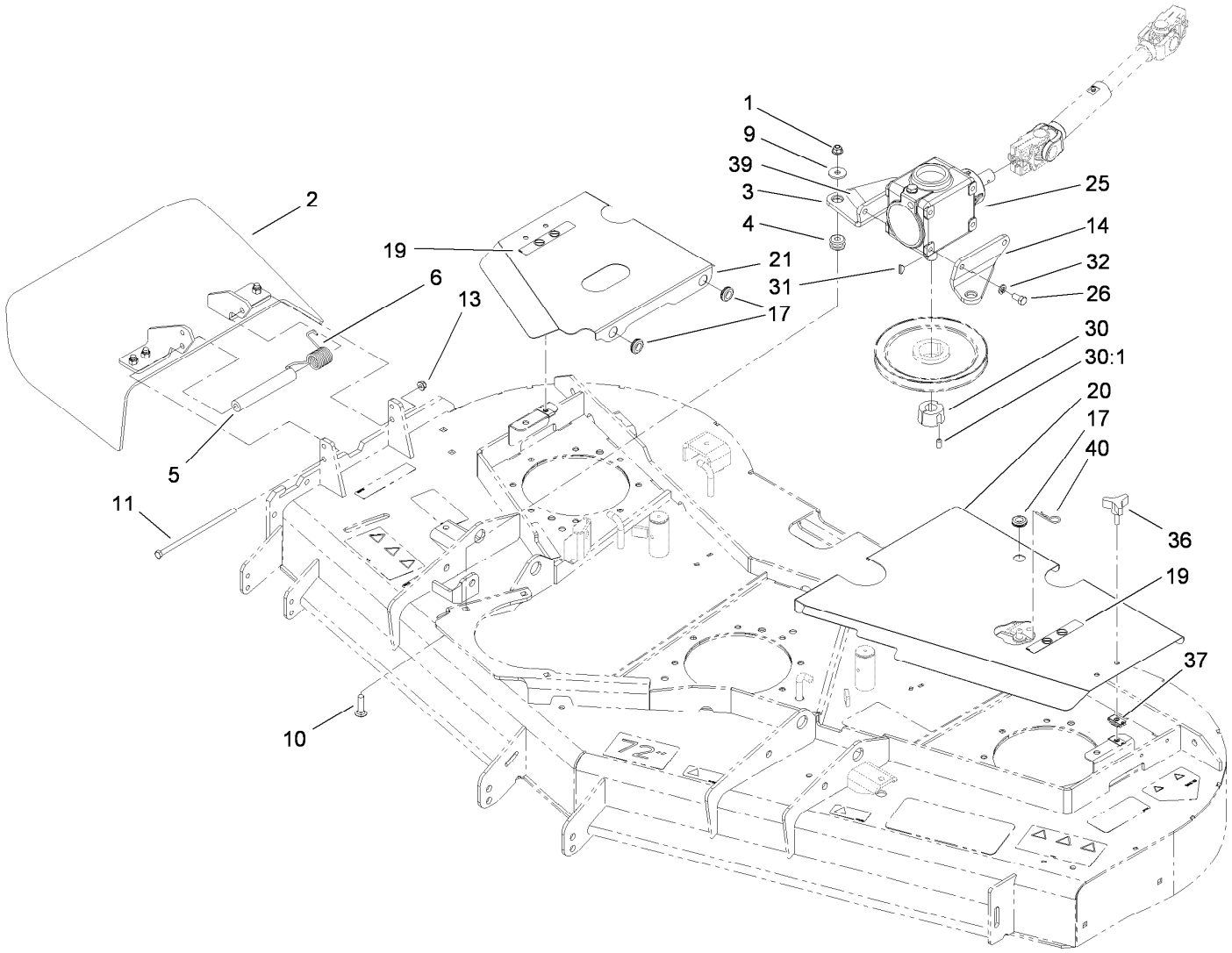

Belt Cover, Gearbox and Baffle Assembly

Ref.	Part Number	Qty.	Description
1	104-8301	3	Nut-Flange, NI
2	108-2792	1	Rubber Deflector ASM
3	110-6385-03	1	Bracket-Gearbox, RH
4	63-9750	3	Mount
5	105-4622	1	Spacer
6	108-4052	1	Spring-Torsion
9	63-8410	3	Washer
10	3231-26	3	Screw-CARR
11	112-9557	1	Screw-HH
13	104-8300	1	Nut-Flange, NI
14	110-6384-03	1	Bracket-Gearbox, LH
17	112-9559	4	Grommet
19	93-6687	2	Decal-No Step

Ref.	Part Number	Qty.	Description
20	112-1455-03	1	Cover-Deck, LH
21	112-1456-03	1	Cover-Deck, RH
25	117-9245-03	1	Gearbox ASM
26	323-4	4	Screw-HH
30	23-1640	1	Bushing-Taperlock
30:1	3247-4	2	Screw-Set
31	3257-5	1	Key-Woodruff
32	3253-21	4	Washer-Lock
36	106-2240	2	Knob
37	110-3510	2	Nut-Retainer
39	93-6697	1	Decal-Lube
40	9335054	1	Pin-Hair

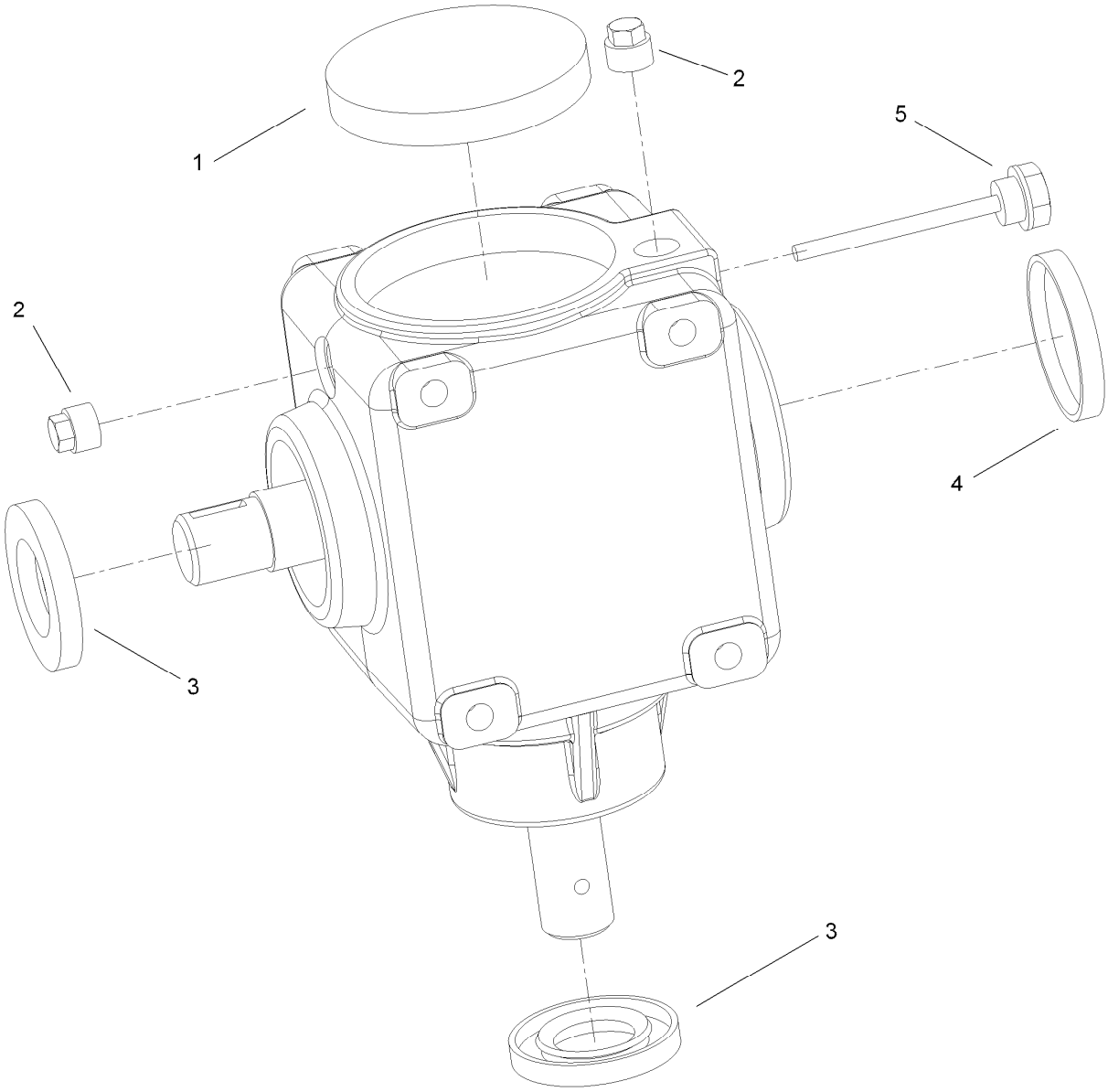

Gearbox Assembly No. 117-9245-03

Ref.	*Part Number*	*Qty.*	*Description*
1	107-2932	1	Cap-Oil
2	107-2933	2	Plug
3	117-9247	2	Seal
4	107-2935	1	Cap-Oil
5	110-8283	1	Plug-Filler, Dipstick

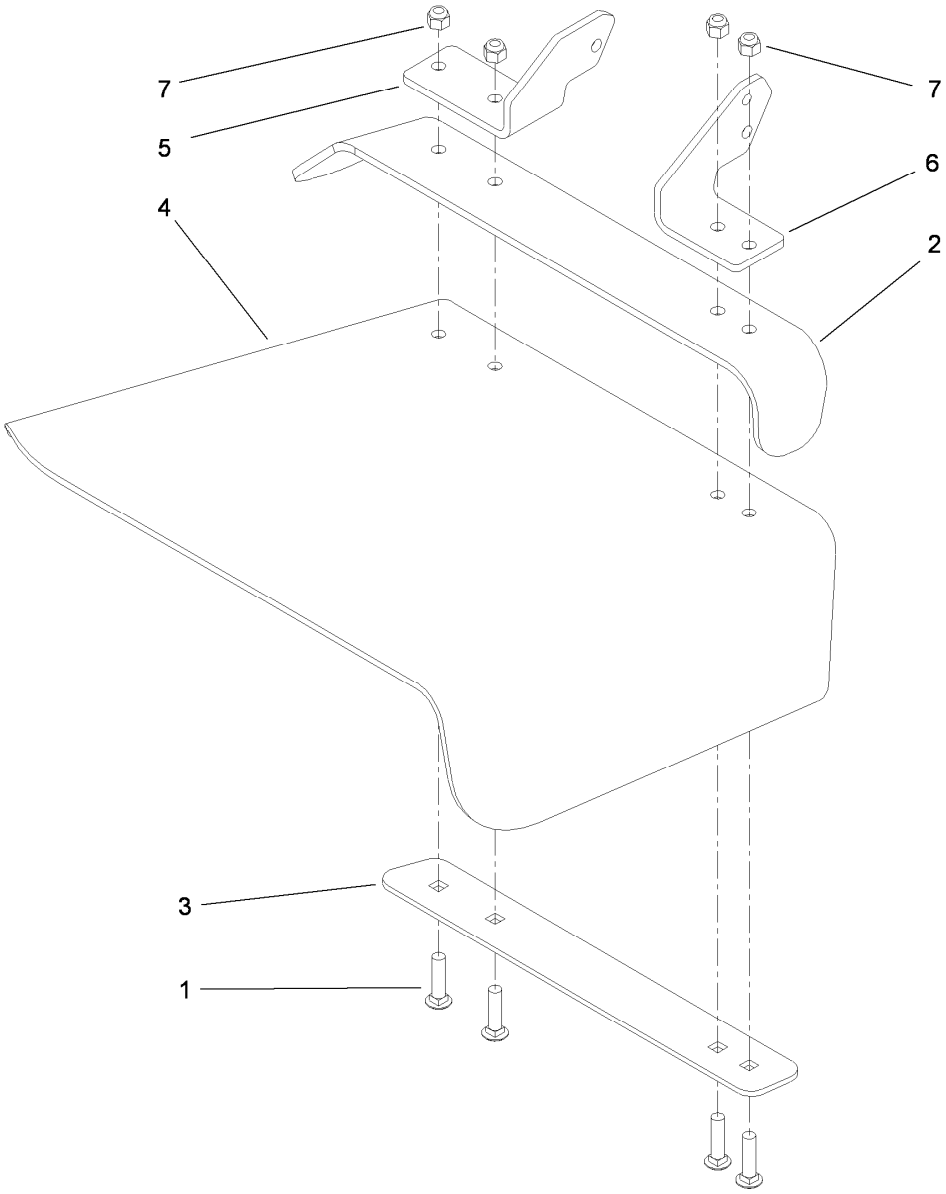

Rubber Deflector Assembly No. 108-2792

Ref.	*Part Number*	*Qty.*	*Description*
1	3231-4	4	Screw-CARR
2	106-3246-01	1	Deflector
3	106-3248-03	1	Strap-Discharge
4	108-5029	1	Deflector-Rubber
5	108-4059-01	1	Plate-Hinge, Rear
6	106-3253-01	1	Plate-Hinge, Front
7	104-8301	4	Nut-Flange, NI

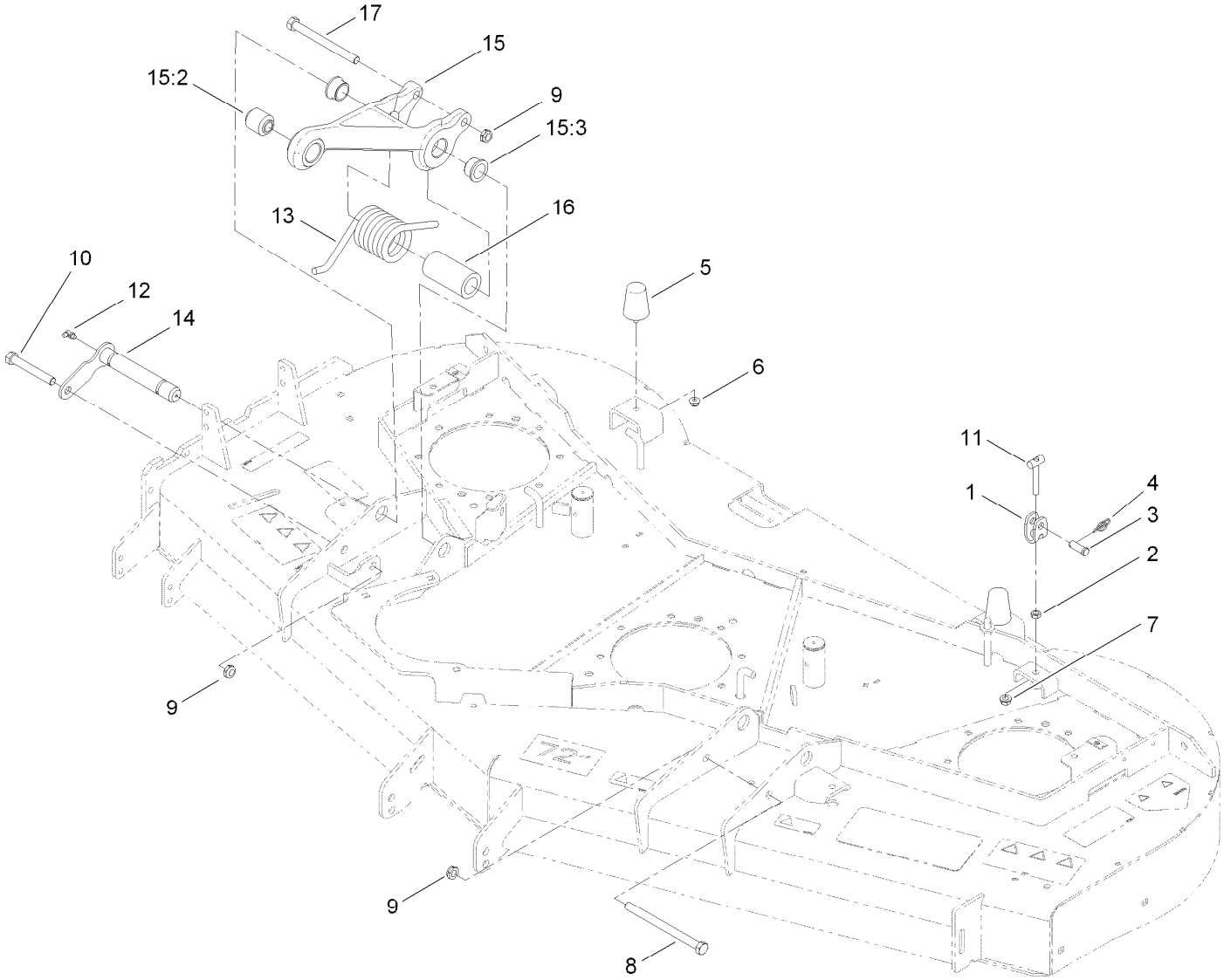

Adjustment Link and Bumper Assembly

Ref.	Part Number	Qty.	Description
1	115-1429	4	Yoke-Clevis
2	3218-3	4	Nut-Jam
3	700601	4	Pin-Clevis
4	112-1491	4	Pin-Cotter, Rue Ring
5	110-5070	2	Bumper-Neoprene
6	104-8300	2	Nut-Flange, NI
7	3290-357	4	Nut-HHF, Whiz
8	325-33	1	Screw-HH
9	3296-45	4	Nut-Lock, NI
10	325-14	1	Screw-HH

Ref.	Part Number	Qty.	Description
11	115-1431	4	T-Bar ASM
12	302-60	4	Fitting-Grease
13	110-9828	2	Spring-Torsion
14	112-1622	2	Pin
15	112-1625	2	Pull Link ASM
15:2	107-2328	1	Bushing
15:3	114-5680	2	Bushing-Flange
16	110-9845	2	Spacer-Plain
17	325-22	2	Screw-HH

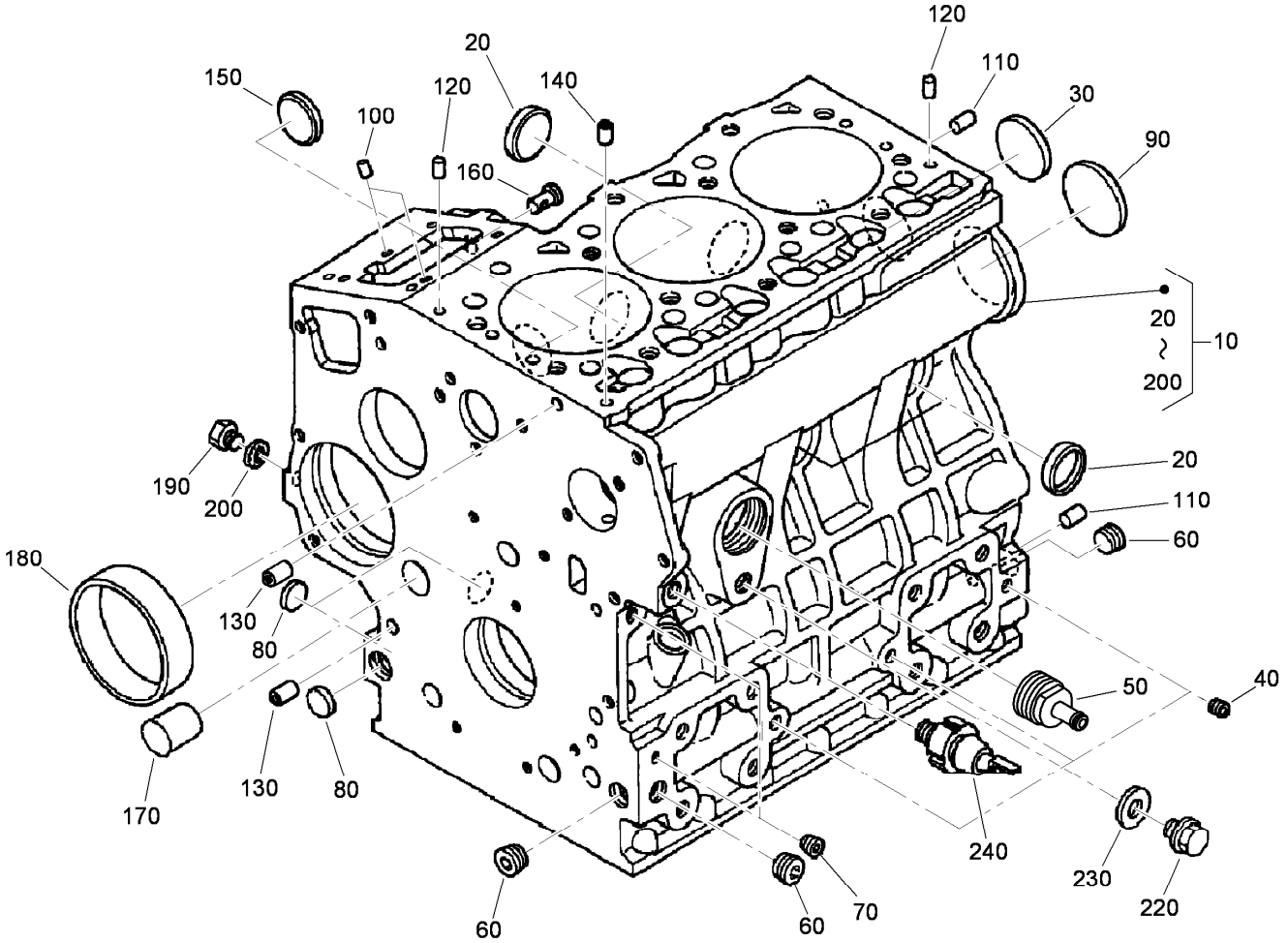

Crankcase Assembly

Ref.	Part Number	Qty.	Description
10	112-7043	1	Crankcase ASM
20	98-9398	4	Cap-Sealing
30	98-7539	1	Cap-Sealing
40	98-7540	3	Plug
50	99-8347	1	Joint-Pipe, Drain
60	98-9597	3	Plug
70	98-7487	2	Plug
80	98-9379	3	Plug-Expansion
90	98-9668	1	Plug-Expansion
100	98-9375	2	Pin-Straight
110	98-9377	2	Pin-Straight
120	98-9376	2	Pin-Straight
130	98-9387	2	Pin-Pipe
140	98-9539	1	Pin-Pipe
150	98-9599	1	Plug
160	98-9630	1	Pin-Spring, Start
170	98-9675	1	Plug
180	98-9656	1	Bushing-Governor, Gear
190	98-7507	1	Plug
200	98-7428	1	Gasket
220	99-3447	1	Plug
230	106-7056	1	Gasket
240	98-9416	1	Switch-Oil

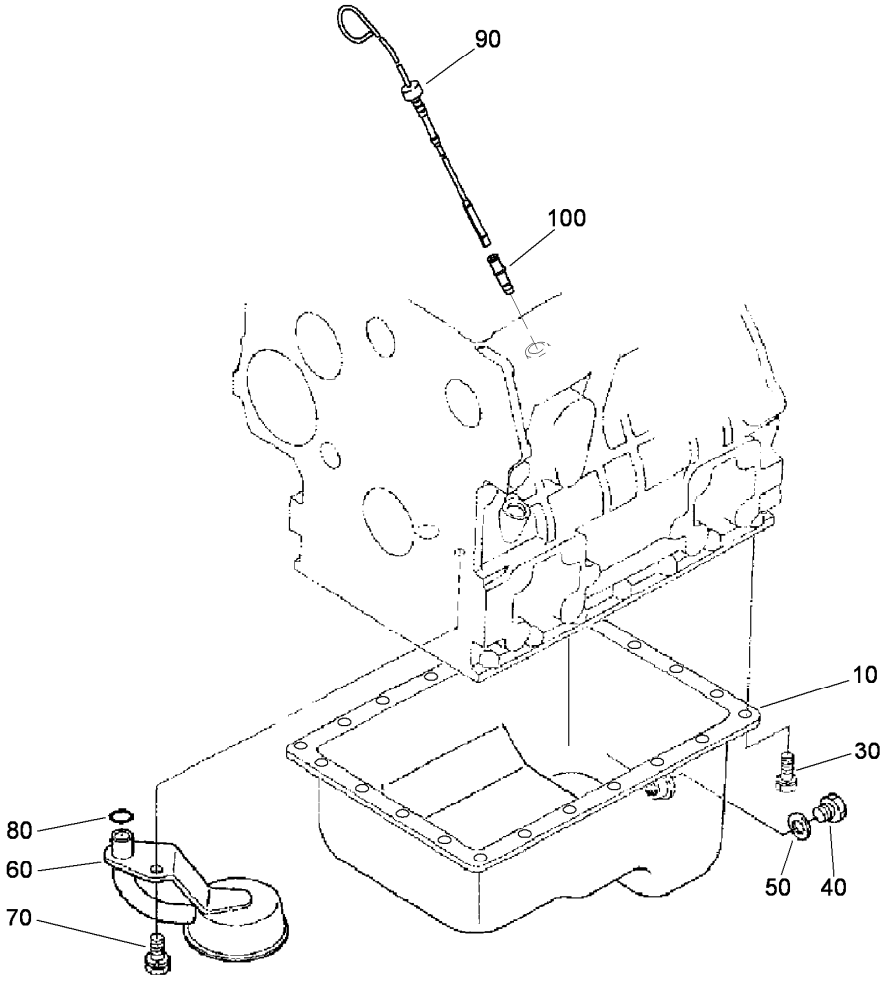

Oil Pan Assembly

Ref.	*Part Number*	*Qty.*	*Description*
10	112-0179	1	Pan-Oil
30	98-9351	22	Bolt
40	114-8151	1	Plug-Drain
50	98-7524	1	Gasket
60	112-7044	1	Head-Filter
70	98-7526	1	Bolt
80	105-3776	1	O-Ring
90	107-9076	1	Gauge-Oil
100	105-4580	1	Guide-Gauge, Oil

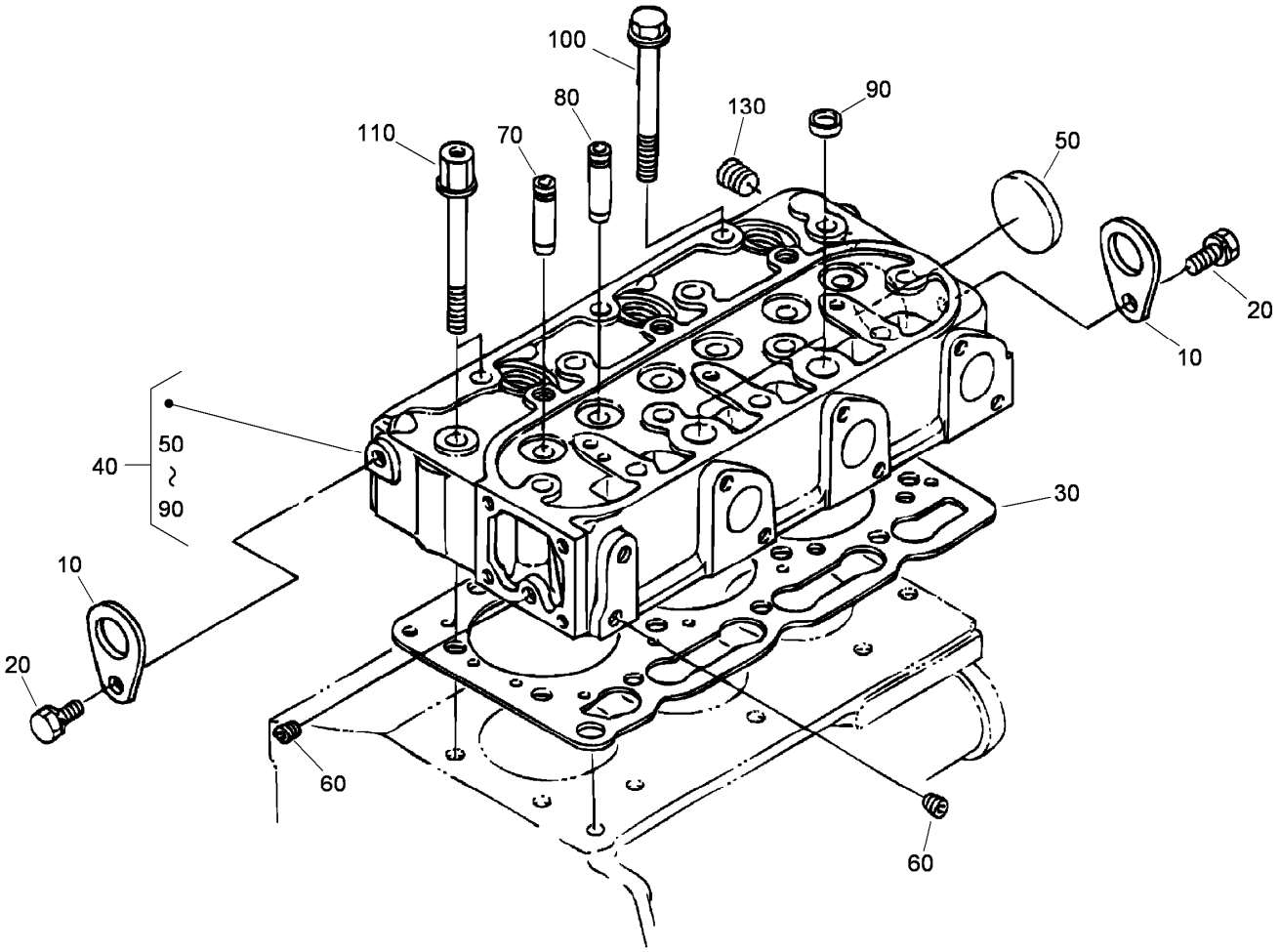

Cylinder Head Assembly

Ref.	*Part Number*	*Qty.*	*Description*
10	98-7531	2	Hook-Engine
20	100-9195	2	Bolt
30	108-6573	1	Gasket-Head, Cylinder
40	107-7823	1	Cylinder Head ASM
50	105-3705	1	Cap-Sealing
60	98-7540	2	Plug
70	107-9066	3	Guide-Valve, Inlet
80	107-9067	3	Guide-Valve, Exhaust
90	98-9389	2	Cap-Sealing
100	98-9479	12	Bolt-Head, Cylinder
110	98-9647	2	Bolt-Head, Cylinder
130	98-9444	1	Plug

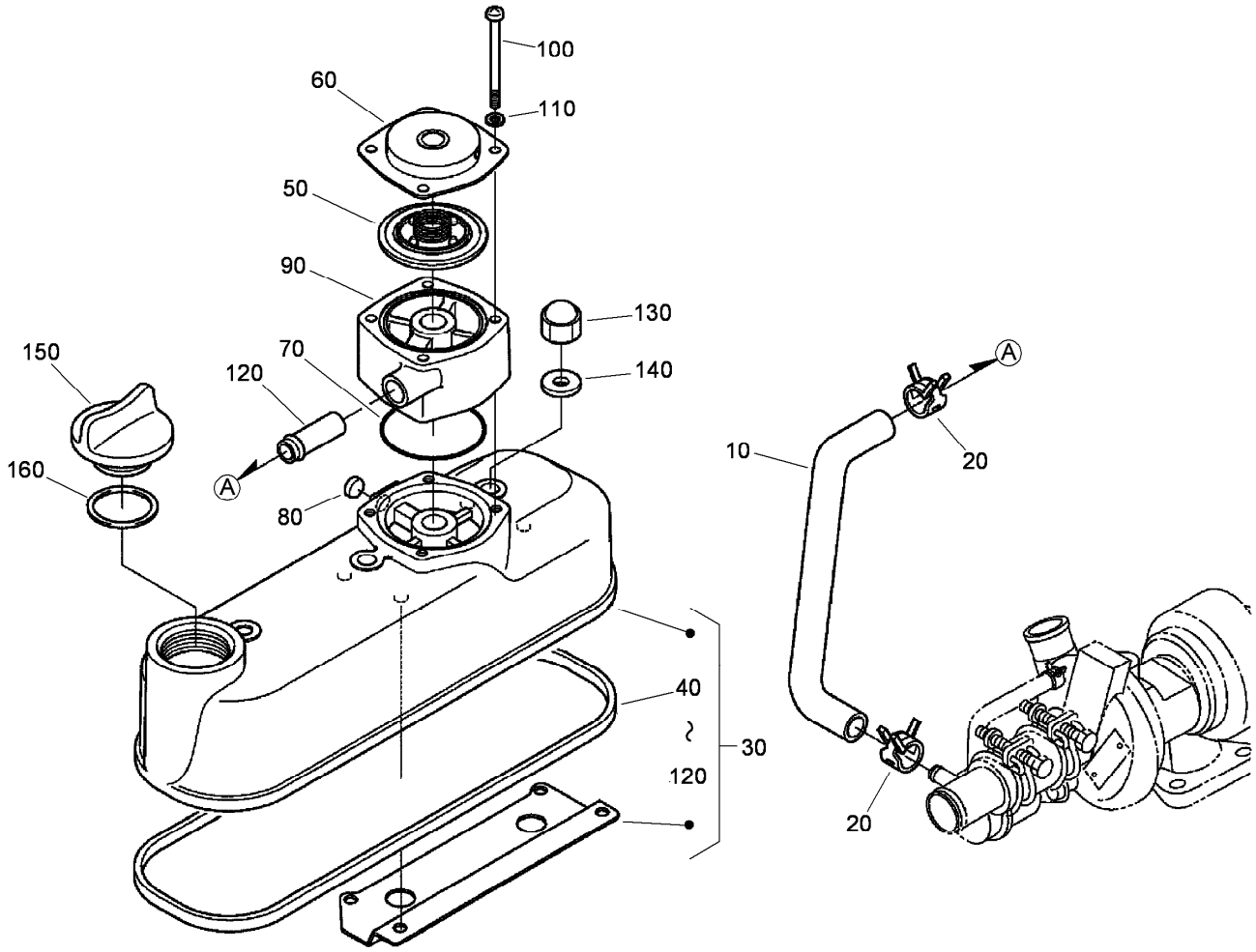

Head Cover Assembly

Ref.	Part Number	Qty.	Description
10	115-3040	1	Tube-Breather
20	108-2859	2	Clamp-Hose
30	115-3041	1	Cylinder Head Cover ASM
40	98-9615	1	Gasket-Cover, Head
50	108-2861	1	Breather Valve ASM
60	110-3714	1	Cover-Breather
70	110-3846	1	O Ring-Breather
80	115-3042	1	Cap-Sealing
90	115-3043	1	Spacer-Breather
100	115-3044	4	Screw-Pan Head
110	100-2204	4	Washer-Spring
120	98-7766	1	Pipe-Return, Water
130	98-9455	3	Nut-Cap
140	98-9454	3	Gasket
150	107-9075	1	Plug-Filler, Oil
160	99-3446	1	O-Ring

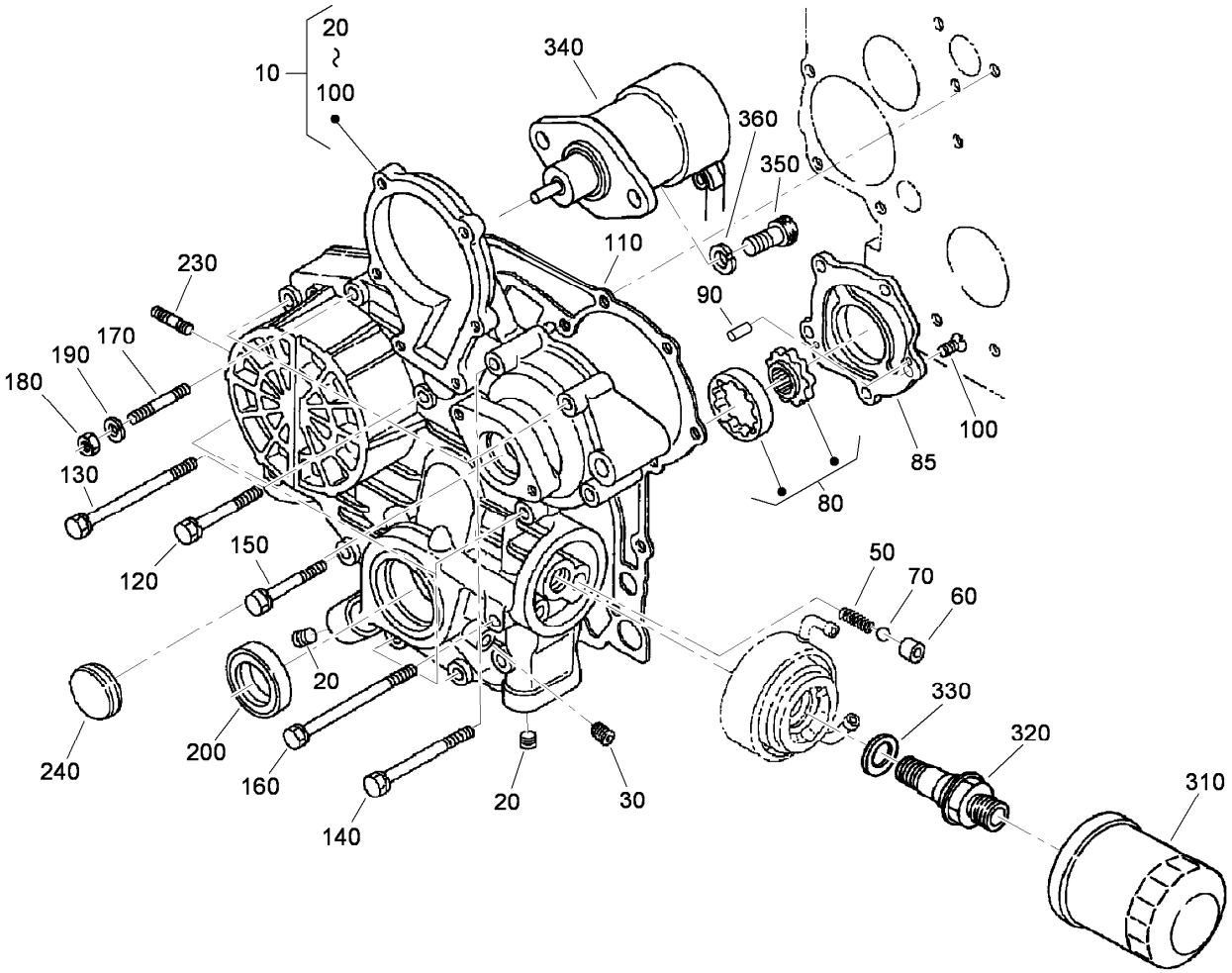

Gear Case Assembly

Ref.	Part Number	Qty.	Description
10	115-4111	1	Gear Case ASM
20	98-9598	2	Plug
30	98-7487	1	Plug
50	98-9544	1	Spring
60	98-9543	1	Seat-Valve
70	98-9380	1	Ball
80	98-9540	1	Oil Pump Rotor ASM
85	107-9069	1	Cover-Pump, Oil
90	107-9072	2	Pin-Straight
100	107-9071	5	Screw
110	98-9633	1	Gasket-Case, Gear
120	98-7496	3	Bolt
130	105-3797	4	Bolt
140	98-9356	4	Bolt

Ref.	Part Number	Qty.	Description
150	107-9074	1	Bolt
160	98-9586	2	Bolt
170	105-3709	1	Stud
180	98-7572	1	Nut
190	98-7699	1	Washer-Spring
200	98-9482	1	Seal-Oil
230	105-3710	2	Stud
240	98-9641	1	Cover-Case, Gear
310	108-3841	1	Filter-Oil
320	104-5159	1	Holder ASM
330	98-9727	1	Collar
340	104-5155	1	Solenoid-Stop
350	115-3039	2	Bolt-HSH
360	98-7699	2	Washer-Spring

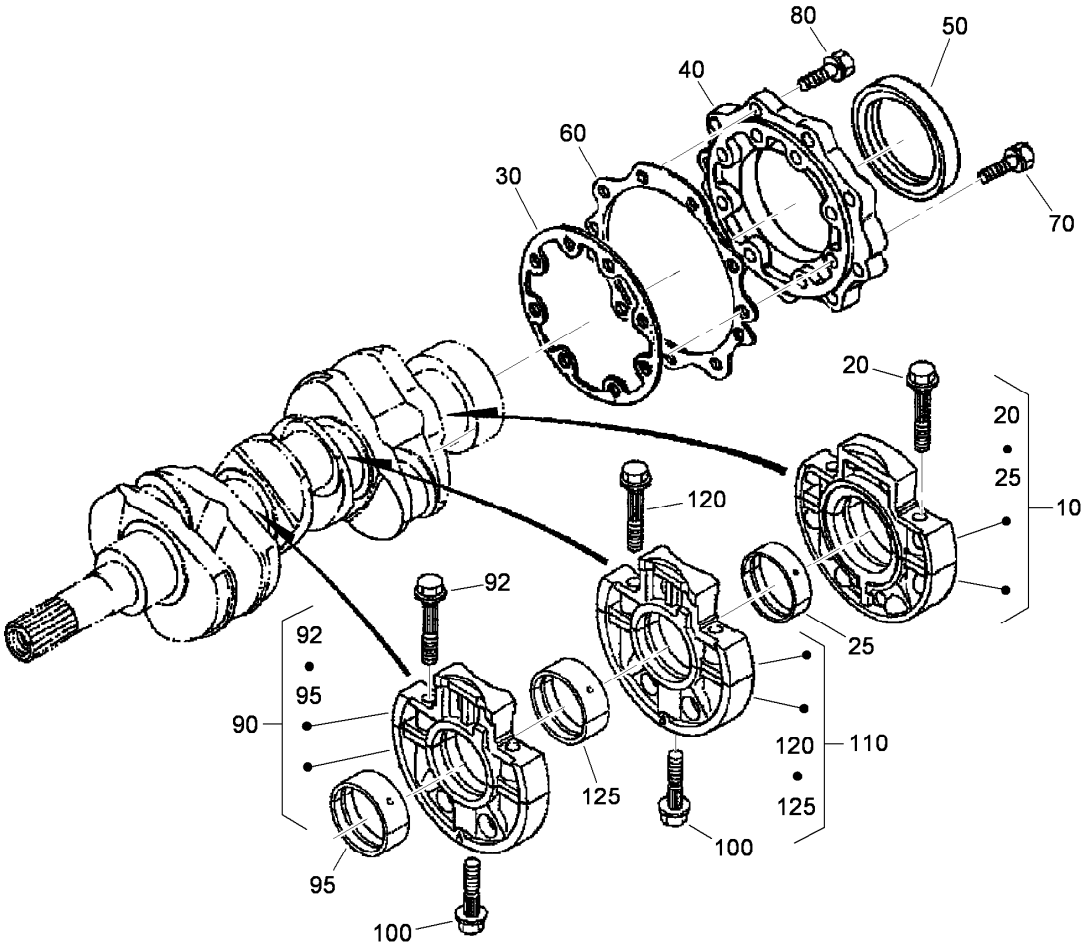

Main Bearing Case Assembly

Ref.	Part Number	Qty.	Description
10	112-7026	1	Wheel Bearing Case ASM
20	98-9484	2	Bolt-Case, Bearing
25	112-7045	1	Metal-Crankshaft
25	112-7039	1	Metal-Crankshaft (0.2Mm)
25	112-7040	1	Metal-Crankshaft (-0.4Mm)
30	98-9634	1	Gasket-Case, Bearing
40	112-7046	1	Cover-Case, Bearing
50	112-0180	1	Seal-Oil
60	112-7037	1	Gasket-Cover, Case
70	98-9352	8	Bolt
80	98-7568	9	Bolt
90	112-7028	1	Bearing ASM
92	98-9484	2	Bolt-Case, Bearing
95	112-7011	1	Bearing-Main (STD)
95	112-7012	1	Metal-Crankpin (-0.2Mm)
95	112-7013	1	Metal-Crankpin (-0.4Mm)
100	98-9485	2	Bolt-Case, Bearing
110	112-7027	1	Bearing ASM
120	98-9484	2	Bolt-Case, Bearing
125	112-7011	1	Bearing-Main (STD)
125	112-7012	1	Metal-Crankpin (-0.2Mm)
125	112-7013	1	Metal-Crankpin (-0.4Mm)

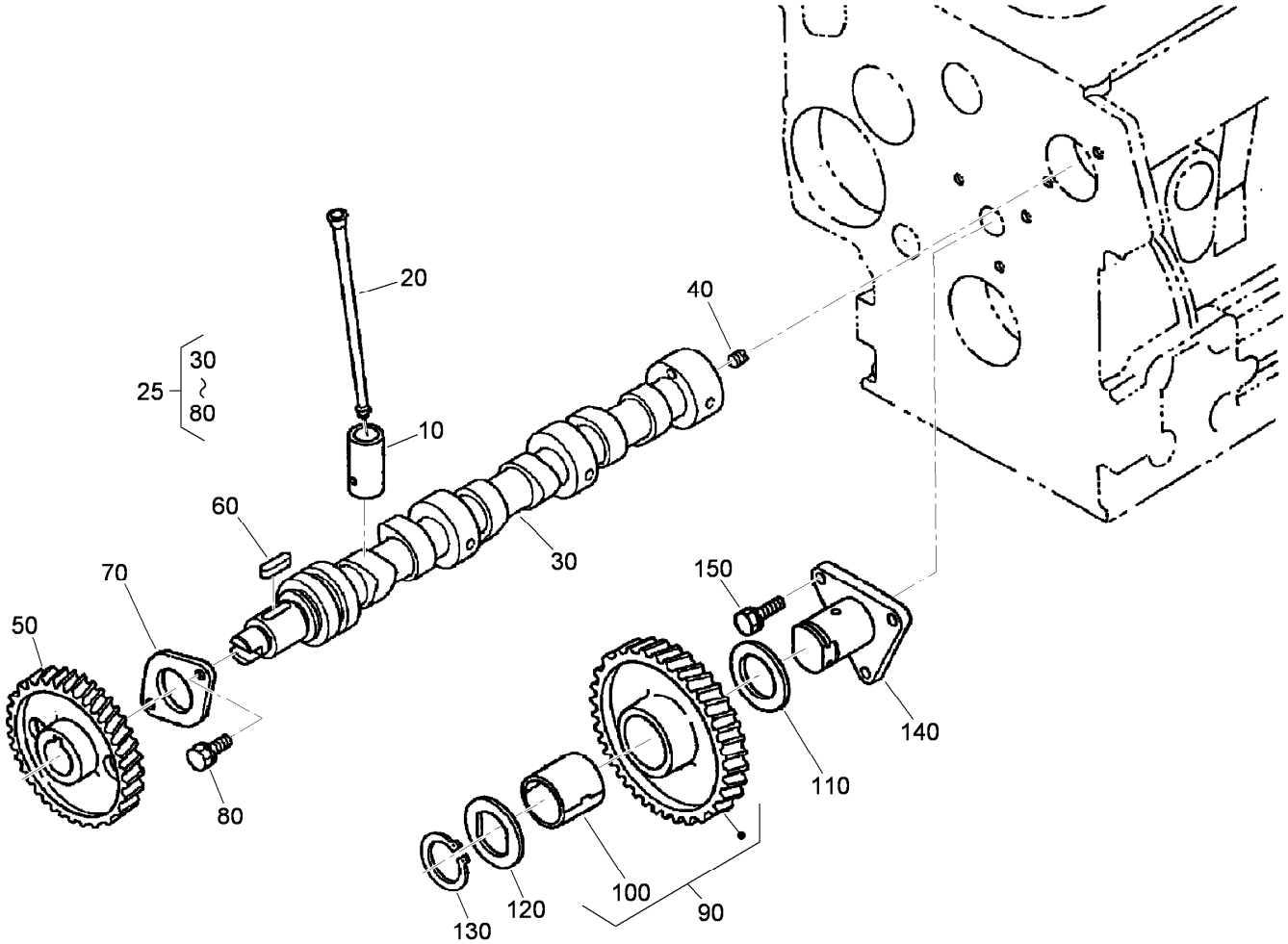

Camshaft and Idle Gear Shaft Assembly

Ref.	*Part Number*	*Qty.*	*Description*
10	112-0185	6	Tappet
20	98-9509	6	Rod-Push
25	112-7029	1	Camshaft ASM
30	108-1403	1	Camshaft
40	98-7449	1	Screw-Set
50	98-9512	1	Gear-Cam
60	98-9378	1	Key-Feather
70	98-9510	1	Stopper-Camshaft
80	98-7692	2	Bolt
90	98-9649	1	Idle Gear ASM
100	98-9650	1	Bushing-Gear, Idle
110	98-9535	1	Collar-Gear, Idle
120	98-9536	1	Collar-Gear, Idle
130	98-9534	1	Circlip-Gear, Idle
140	98-9533	1	Shaft-Gear, Idle
150	98-7692	3	Bolt

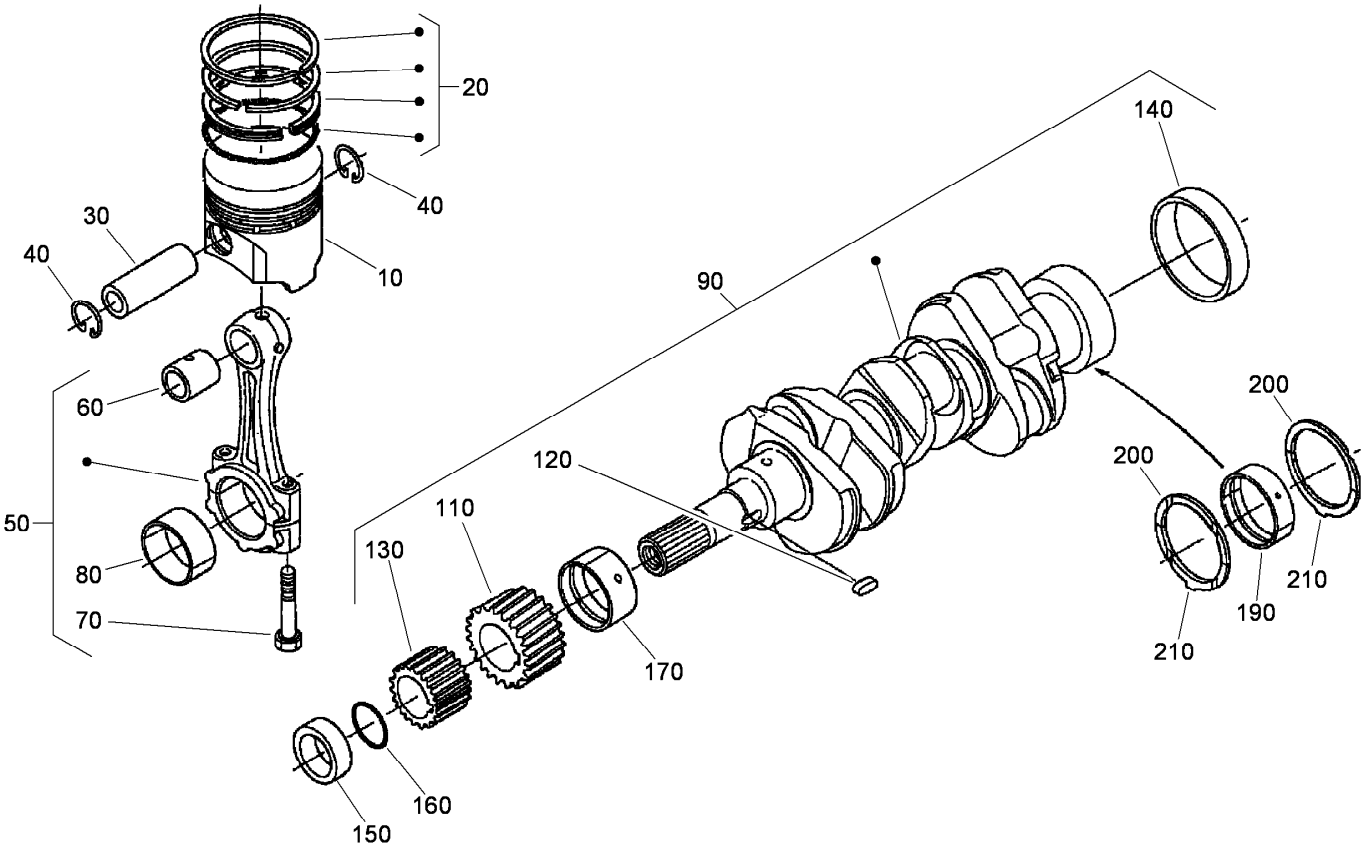

Piston and Crankshaft Assembly

Ref.	Part Number	Qty.	Description
10	98-9550	3	Piston (STD)
10	108-1417	3	Piston (0.5Mm)
20	98-9551	3	Piston Ring ASM (STD)
20	108-1404	3	Piston Ring ASM (0.5Mm)
30	98-9513	3	Pin-Piston
40	98-9514	6	Circlip-Pin, Piston
50	98-9552	3	Connecting Rod ASM
60	115-3014	3	Bushing-Pin, Piston
70	98-9517	6	Bolt-Rod, Connecting
80	98-9553	3	Bearing-Rod (STD)
80	108-1405	3	Metal-Crankpin (-0.2Mm)
80	108-1406	3	Metal-Crankpin (-0.4Mm)
90	98-9642	1	Crankshaft ASM
100	110-3729	3	Ball ●
110	98-9532	1	Gear-Crankshaft
120	98-9666	1	Key
130	98-9542	1	Gear-Drive, Oil Pump
140	98-9522	1	Sleeve-Crankshaft

Ref.	Part Number	Qty.	Description
150	98-9521	1	Collar-Crankshaft
160	105-3783	1	O-Ring
170	112-7005	1	Bearing-Main (STD)
170	112-7009	1	Metal-Crankpin (-0.2Mm)
170	112-7010	1	Metal-Crankpin (-0.4Mm)
180	112-7011	2	Bearing-Main (STD) ●
180	112-7012	2	Metal-Crankpin (-0.2Mm) ●
180	112-7013	2	Metal-Crankpin (-0.4Mm) ●
190	112-7045	1	Metal-Crankshaft
190	112-7039	1	Metal-Crankshaft (0.2Mm)
190	112-7040	1	Metal-Crankshaft (-0.4Mm)
200	98-9413	2	Bearing-Thrust (STD)
200	98-9414	2	Bearing-Thrust (0.2Mm)
200	98-9415	2	Bearing-Thrust (0.4Mm)
210	98-9688	2	Bearing-Thrust (STD)
210	98-9689	2	Bearing-Thrust (0.2Mm)
210	98-9690	2	Bearing-Thrust (0.4Mm)

● Not illustrated

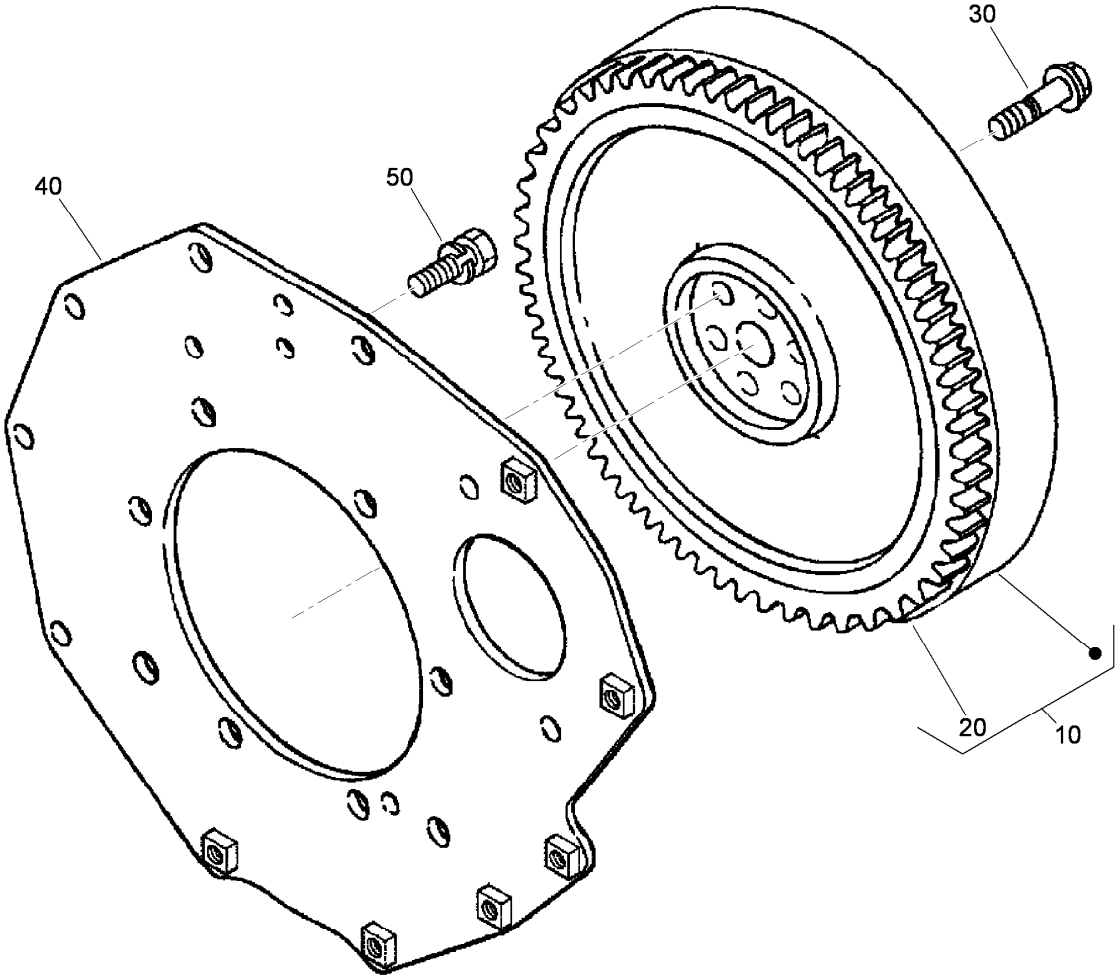

Flywheel Assembly

Ref.	Part Number	Qty.	Description
10	105-3784	1	Flywheel ASM
20	115-3015	1	Gear-Ring
30	98-9537	6	Bolt-Flywheel
40	98-9486	1	Plate-End, Rear
50	98-9392	8	Bolt

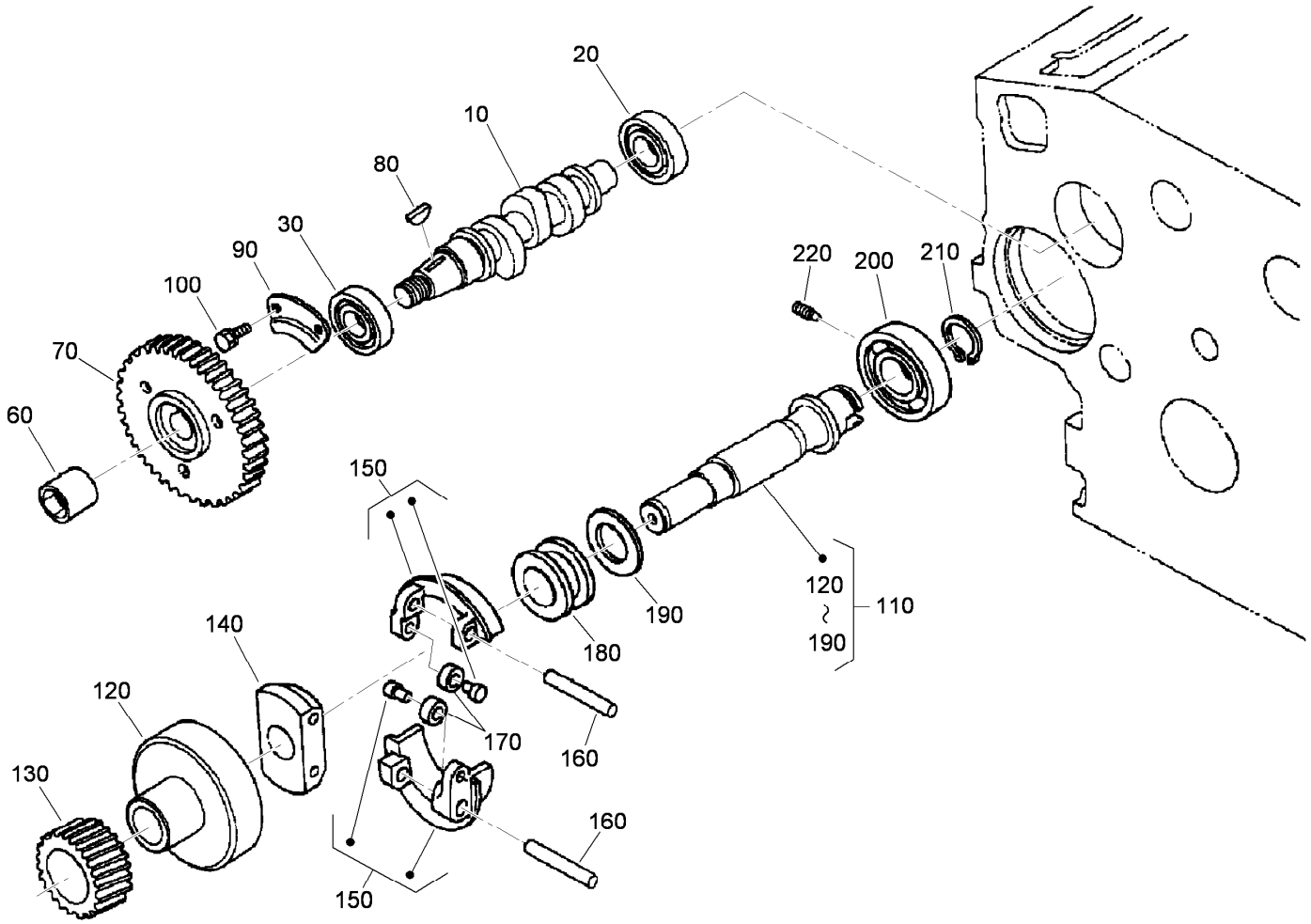

Fuel Camshaft and Governor Shaft Assembly

Ref.	*Part Number*	*Qty.*	*Description*
10	98-9459	1	Camshaft-Fuel
20	107-9077	1	Bearing-Ball
30	107-9078	1	Bearing-Ball
60	98-9590	1	Nut-Cap
70	98-9669	1	Gear-Pump, Injection
80	98-9595	1	Key-Woodruff
90	98-9511	1	Stopper-Fuel, Camshaft
100	98-7692	2	Bolt
110	98-9644	1	Governor Shaft ASM
120	98-9562	1	Holder-Gear, Governor
130	98-9673	1	Gear-Governor
140	98-9561	1	Holder-Weight, Governor
150	98-9559	2	Governor Weight ASM
160	98-9560	2	Shaft-Weight, Governor
170	98-9692	2	Roller
180	98-9563	1	Sleeve-Governor
190	98-9564	1	Washer-Thrust
200	107-9079	1	Bearing-Ball
210	98-9657	1	Circlip-Shaft, Governor
220	98-9565	1	Screw-Set

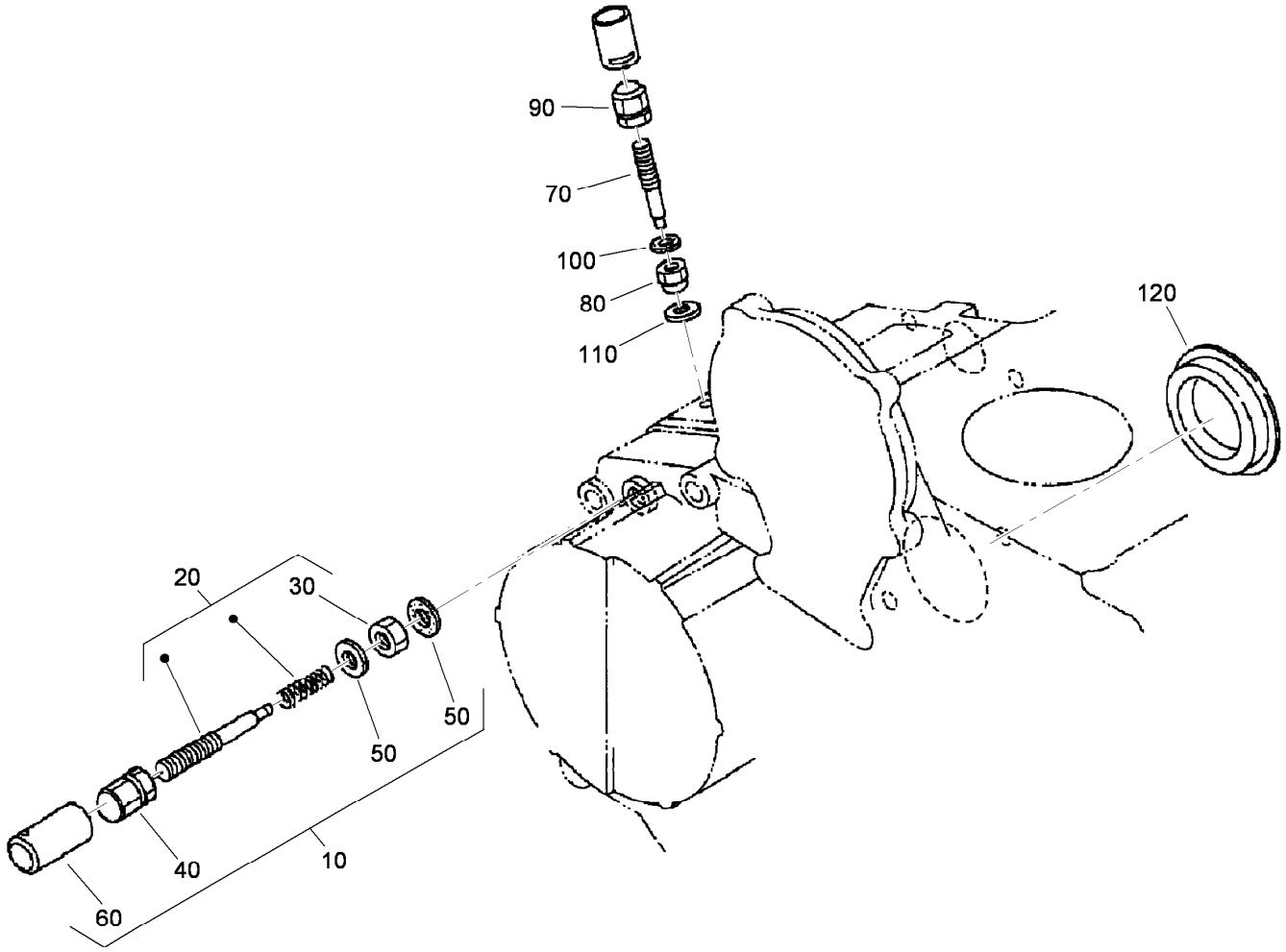

Idle Apparatus Assembly

Ref.	*Part Number*	*Qty.*	*Description*
10	98-9678	1	Idle Apparatus ASM
20	112-7014	1	Adjusting Bolt ASM
30	99-8387	1	Nut-Cap
40	112-0181	1	Nut
50	98-7654	2	Gasket
60	98-7656	1	Cap
70	112-7015	1	Bolt-Adjusting
80	100-2175	1	Nut-Lock
90	112-0181	1	Nut
100	98-7654	1	Gasket
110	107-9081	1	Gasket
120	112-7016	1	Cover-Pump

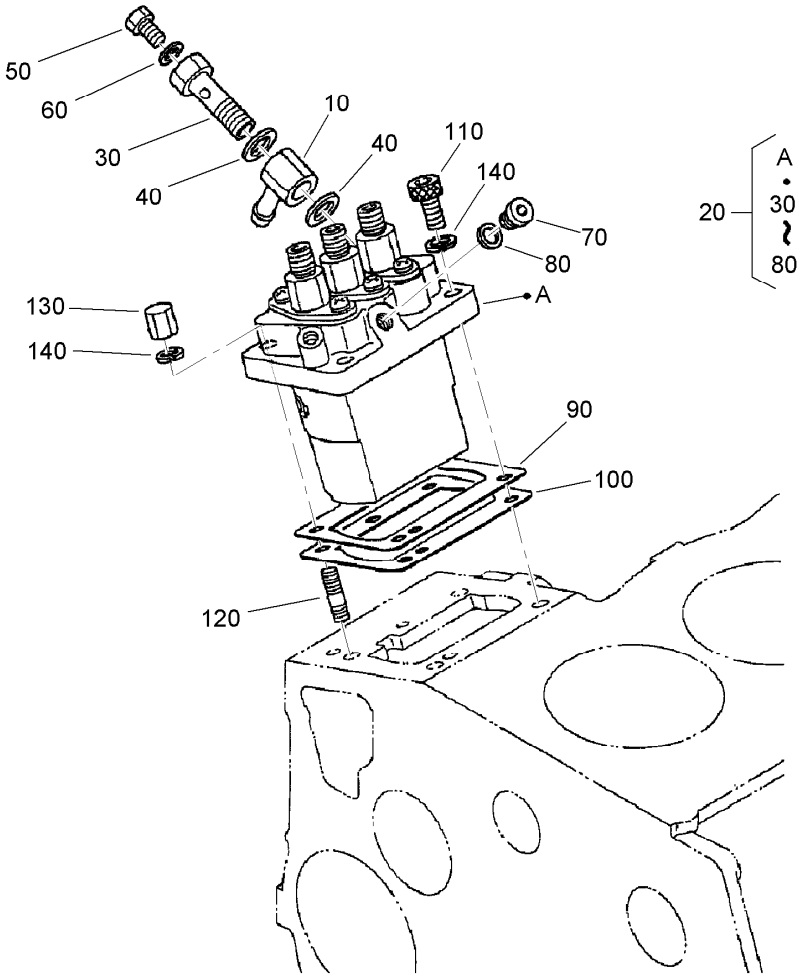

Injection Pump Assembly

Ref.	Part Number	Qty.	Description
10	98-9596	1	Joint-Eye
20	98-9643	1	Injection Pump ASM
30	98-9464	1	Bolt-Joint
40	98-9445	2	Gasket
50	98-9430	1	Screw
60	98-9446	1	Gasket
70	98-9466	1	Plug
80	98-9451	1	Gasket
90	98-9457	1	Shim-Injection (0.25Mm)
90	98-9456	1	Shim-Injection (0.20Mm)
100	98-9458	1	Shim-Injection (0.30Mm)
110	98-9361	2	Bolt-HSH
120	98-9438	2	Stud
130	98-9440	2	Nut-Cap
140	98-7699	4	Washer-Spring

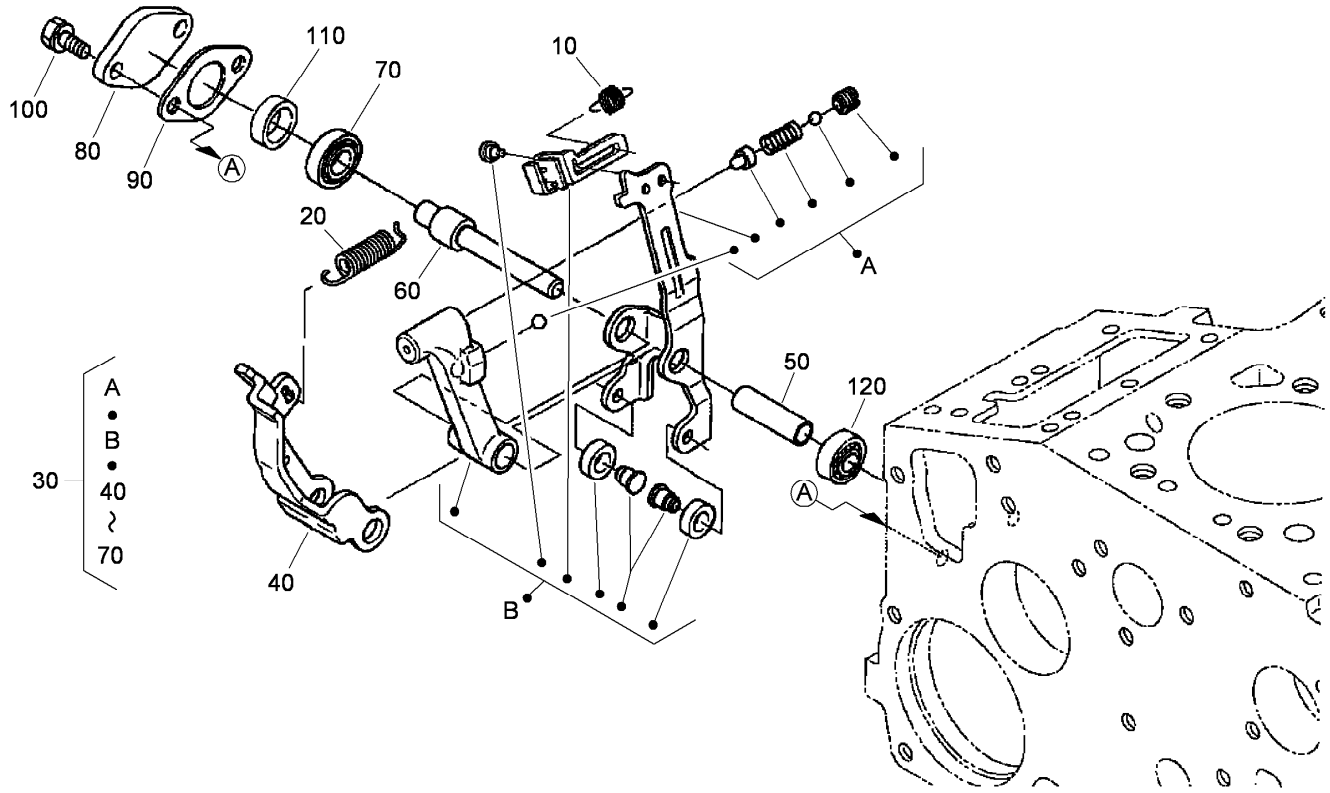

Governor Assembly

Ref.	*Part Number*	*Qty.*	*Description*
10	105-3786	1	Spring-Start
20	98-9681	1	Spring-Governor
30	107-9082	1	Fork Lever ASM
40	107-9084	1	Lever-Fork
50	107-9085	1	Shaft-Lever, Fork
60	107-9086	1	Shaft-Lever, Fork
70	98-9570	1	Bearing-Miniaturize
80	98-9569	1	Cover-Shaft, Fork Lever
90	98-9682	1	Gasket
100	98-9350	2	Bolt
110	98-9567	1	Collar
120	98-9571	1	Bearing-Miniaturize

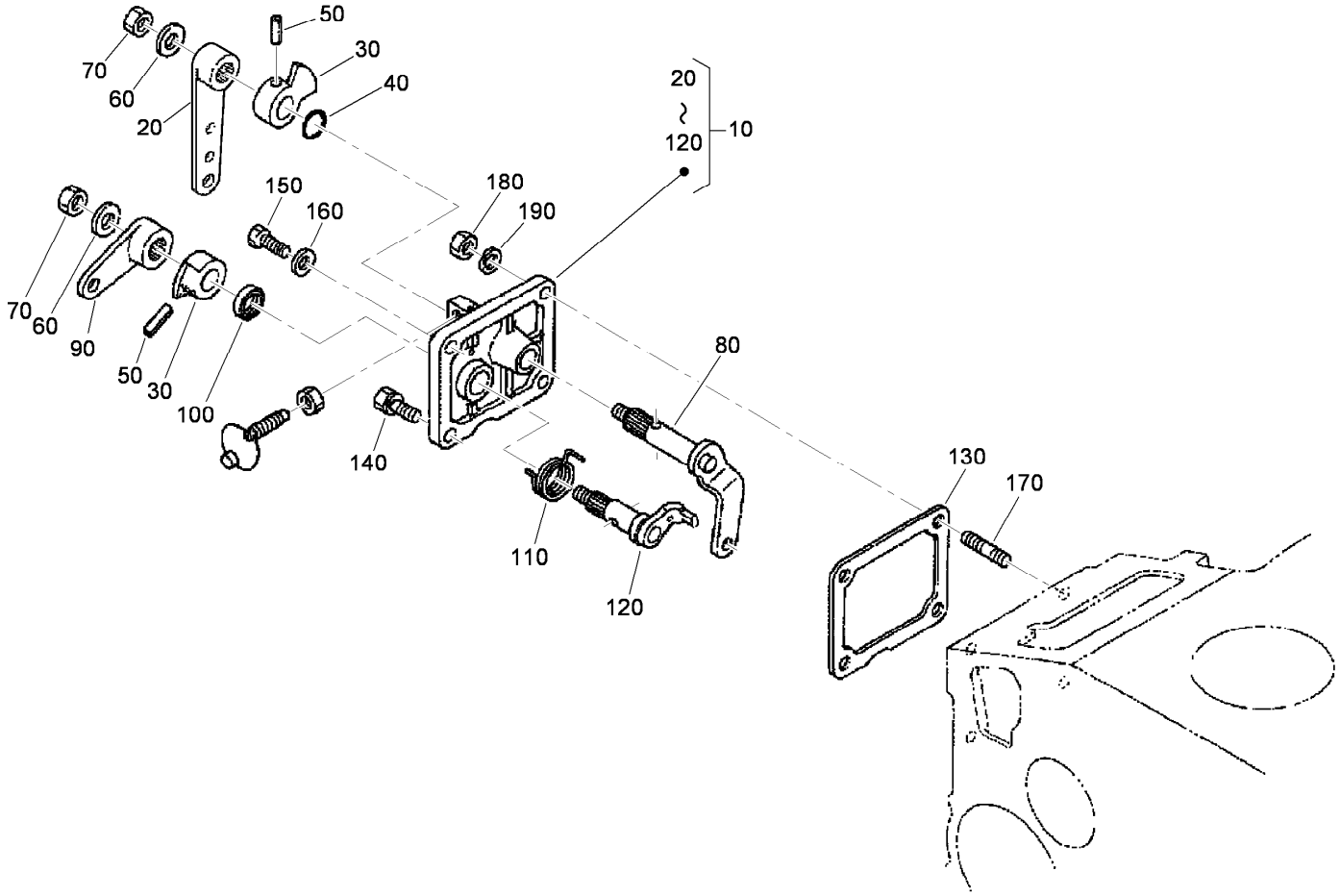

Speed Control Plate Assembly

Ref.	Part Number	Qty.	Description
10	105-3735	1	Control Plate ASM
20	98-9662	1	Lever-Control, Speed
30	98-9572	2	Lever-Control, Speed
40	105-3788	1	O-Ring
50	98-7602	2	Pin-Spring
60	98-9594	2	Washer-Plain
70	98-9589	2	Nut
80	98-9658	1	Governor Lever ASM
90	98-9663	1	Lever-Stop, Engine
100	98-7601	1	Seal-Oil
110	98-9472	1	Spring-Return
120	98-9664	1	Shaft-Lever, Stop
130	98-9637	1	Gasket
140	98-7692	1	Bolt
150	99-8348	1	Bolt
160	98-7654	1	Gasket
170	105-3710	2	Stud
180	98-7572	2	Nut
190	98-7699	2	Washer-Spring

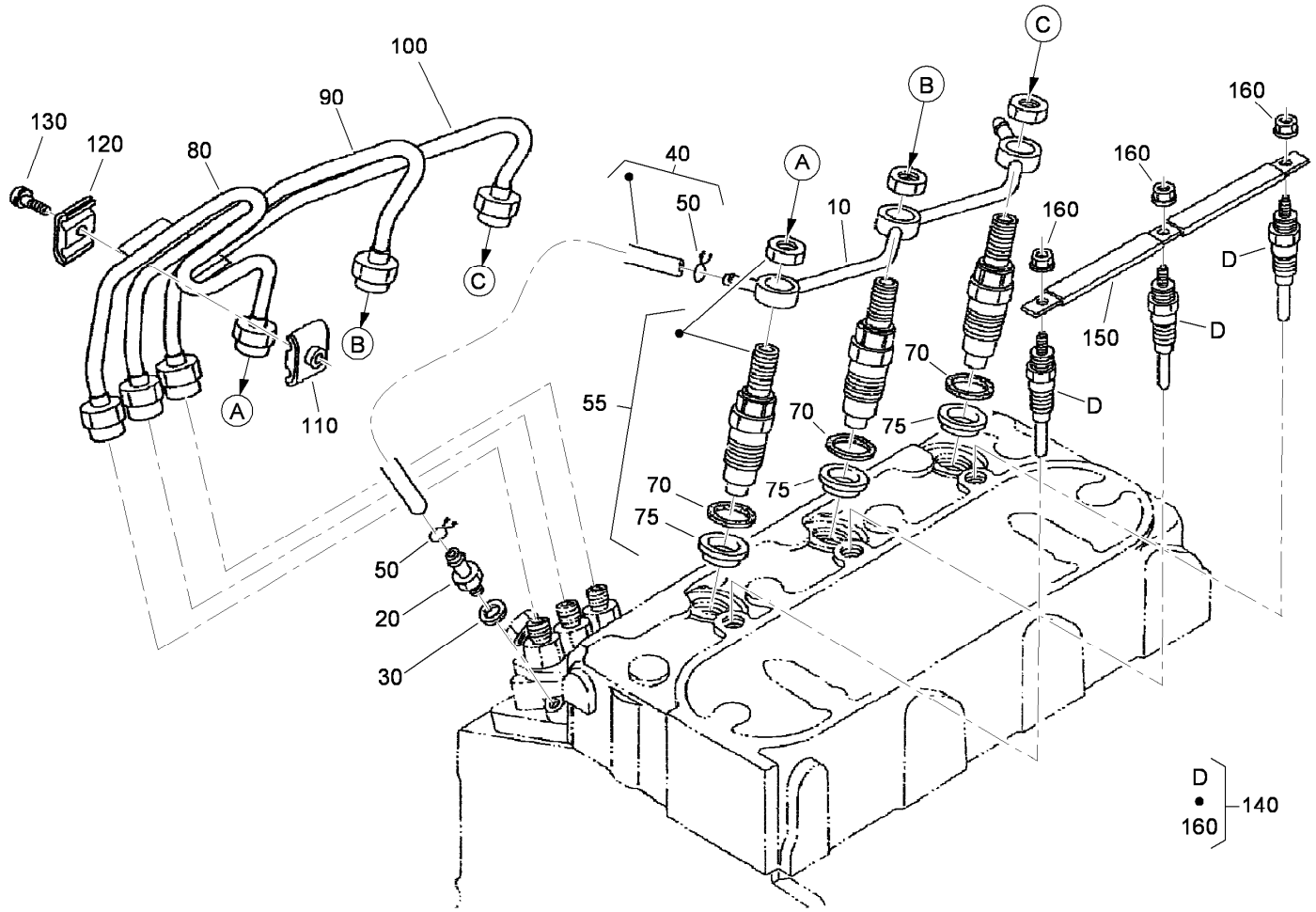

Nozzle Holder and Glow Plug Assembly

Ref.	Part Number	Qty.	Description
10	98-9621	1	Overflow Pipe ASM
20	98-9431	1	Screw-Bleeder, Air
30	98-7654	1	Gasket
40	98-9624	1	Overflow Pipe ASM
50	98-7671	2	Clip-Pipe
55	108-2866	3	Nozzle Holder Kit
70	98-7676	3	Gasket
75	98-7677	3	Seal-Heat
80	98-9622	1	Pipe-Injection
90	98-9654	1	Pipe-Injection
100	98-9655	1	Pipe-Injection
110	98-7682	2	Clamp-Pipe
120	98-7683	2	Clamp-Pipe
130	98-7684	2	Screw (W/Washer)
140	98-9623	3	Plug-Glow
150	98-9631	1	Cord-Plug, Glow
160	99-8377	3	Nut-Flange

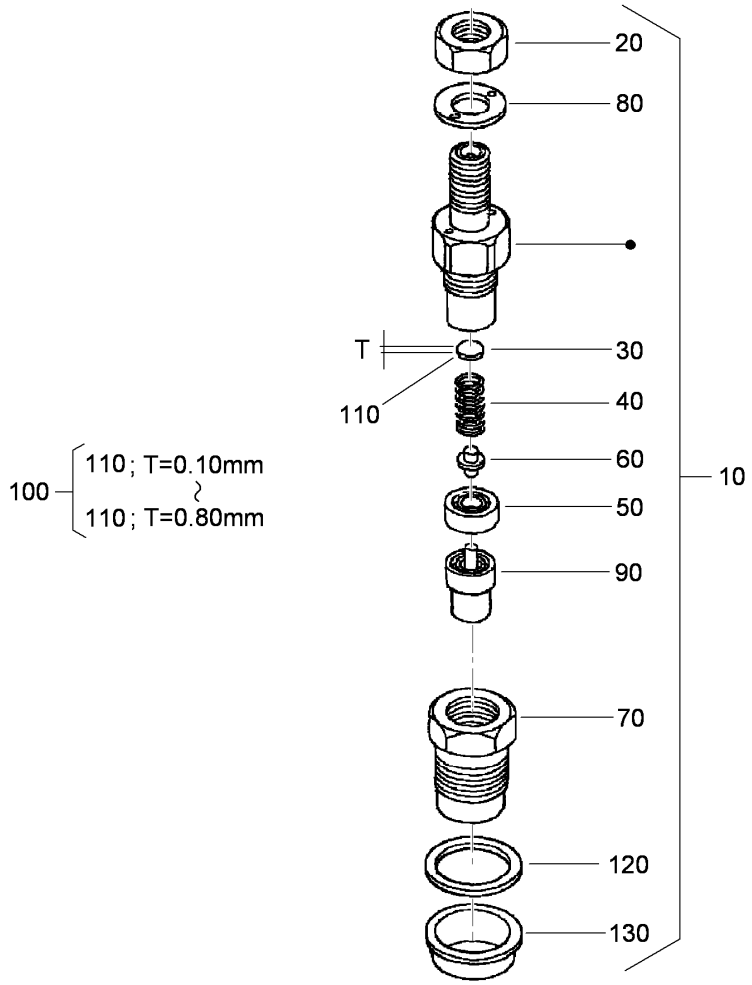

Nozzle Holder Assembly

Ref.	Part Number	Qty.	Description
10	108-2866	3	Nozzle Holder Kit
20	99-8301	3	Nut
30	99-8302	3	Washer-Adjusting
40	99-8303	3	Spring-Nozzle
50	99-8304	3	Spacer-Distance
60	99-8305	3	Rod-Push
70	99-8306	3	Nut-Nozzle
80	99-8307	3	Washer-Plain
90	107-7826	3	Piece-Nozzle
100	99-8309	3	Adjusting Washer ASM
110	99-8310	3	Washer-Adjust (0.10Mm)
110	99-8311	3	Washer-Adjust (0.20Mm)
110	99-8312	3	Washer-Adjust (0.30Mm)
110	99-8313	3	Washer-Adjust (0.40Mm)
110	99-8314	3	Washer-Adjust (0.50Mm)
110	99-8315	3	Washer-Adjust (0.52Mm)
110	99-8316	3	Washer-Adjust (0.54Mm)
110	99-8317	3	Washer-Adjust (0.56Mm)
110	99-8318	3	Washer-Adjust (0.58Mm)
110	99-8319	3	Washer-Adjust (0.80Mm)
120	98-7676	3	Gasket
130	98-7677	3	Seal-Heat

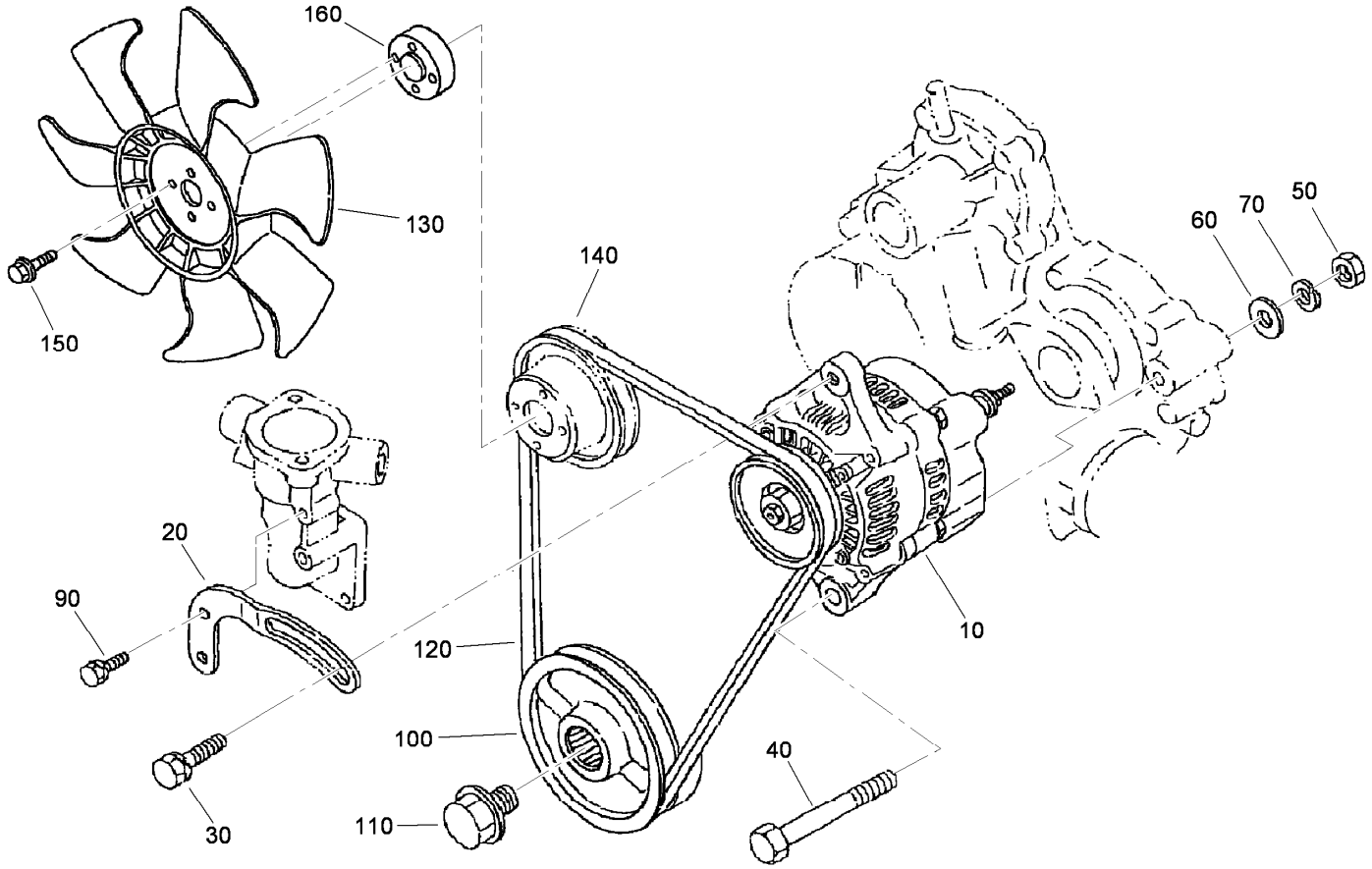

Alternator and Pulley Assembly

Ref.	Part Number	Qty.	Description
10	98-9474	1	Alternator ASM
20	112-7047	1	Stay-Dynamo
30	108-7088	1	Bolt
40	98-9360	1	Bolt
50	98-7737	1	Nut
60	98-9366	1	Washer-Plain
70	98-7738	1	Washer-Spring
90	98-7692	1	Bolt
100	98-9473	1	Pulley-Drive, Fan
110	98-9585	1	Bolt
120	98-9676	1	V-Belt
130	104-4246	1	Fan-Engine
140	98-9584	1	Pulley-Fan
150	33103-020	4	Screw-HHF
160	108-2872	1	Collar-Fan

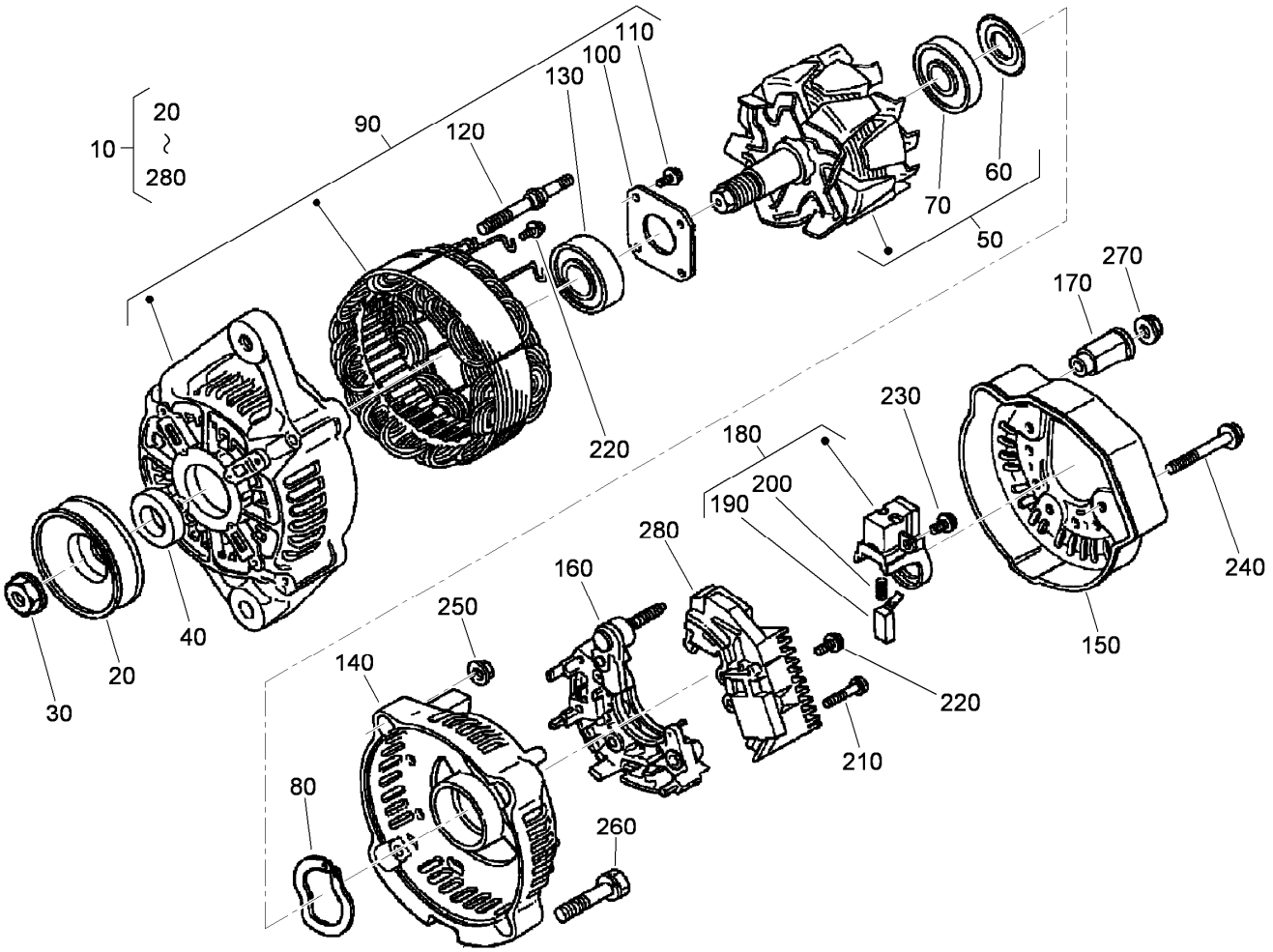

Alternator Components Assembly

Ref.	Part Number	Qty.	Description
10	98-9474	1	Alternator ASM
20	98-9453	1	Pulley-Dynamo
30	98-7708	1	Nut
40	98-7709	1	Collar
50	107-0136	1	Rotor ASM
60	98-7711	1	Cover-Bearing
70	107-0138	1	Bearing-Ball
80	98-7713	1	Washer-Thrust
90	107-0139	1	Drive End Frame ASM
100	98-7715	1	Plate-Retainer
110	98-7716	4	Screw-Head, Round
120	98-7717	2	Bolt-Through
130	107-0137	1	Bearing-Ball
140	107-9087	1	Frame-End

Ref.	Part Number	Qty.	Description
150	107-0140	1	Cover-End
160	98-7721	1	Rectifier ASM
170	98-7722	1	Bushing-Insulation
180	107-0141	1	Brush Holder ASM
190	98-7724	2	Brush
200	98-7725	2	Spring-Brush
210	98-7726	2	Screw-Head, Round
220	98-7727	6	Screw-Head, Round
230	98-7728	1	Screw-Head, Round
240	98-7729	3	Bolt
250	98-7730	2	Nut
260	98-7731	2	Bolt
270	98-7732	1	Nut
280	110-3799	1	Regulator ASM

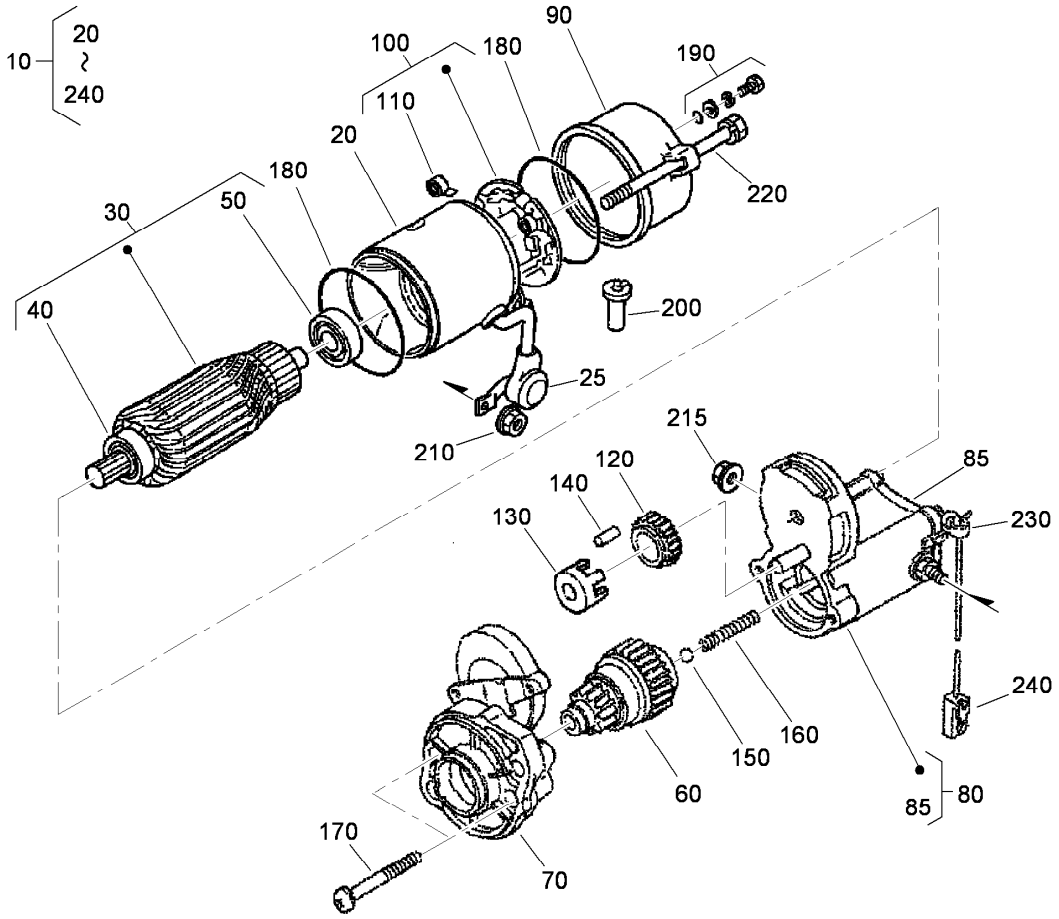

Starter (Component Part) Assembly No. 98-9705

Ref.	Part Number	Qty.	Description
10	98-9705	1	Starter ASM
20	104-8608	1	Yoke ASM
25	99-8375	1	Cover
30	98-7742	1	Armature ASM
40	98-7744	1	Bearing
50	98-7743	1	Bearing
60	99-8373	1	Clutch-Running, Over
70	99-8374	1	Frame-End, Drive
80	105-3746	1	Magnetic Switch ASM
85	105-2886	1	Cover ASM
90	98-7748	1	Frame-End
100	98-7749	1	Brush Holder ASM
110	98-7750	4	Spring-Brush
120	98-7751	1	Gear
130	98-7752	1	Retainer
140	98-7753	5	Roller
150	98-7755	1	Ball
160	98-7754	1	Spring
170	98-7756	2	Bolt
180	98-7757	2	O-Ring
190	98-7758	2	Bolt ASM
200	98-7759	1	Pipe-Drain
210	99-8371	1	Nut-Hex
215	99-8376	1	Nut-Hex
220	100-9240	2	Bolt
230	98-9712	1	Band-Cover
240	98-9711	1	Cord-Solenoid, Stop

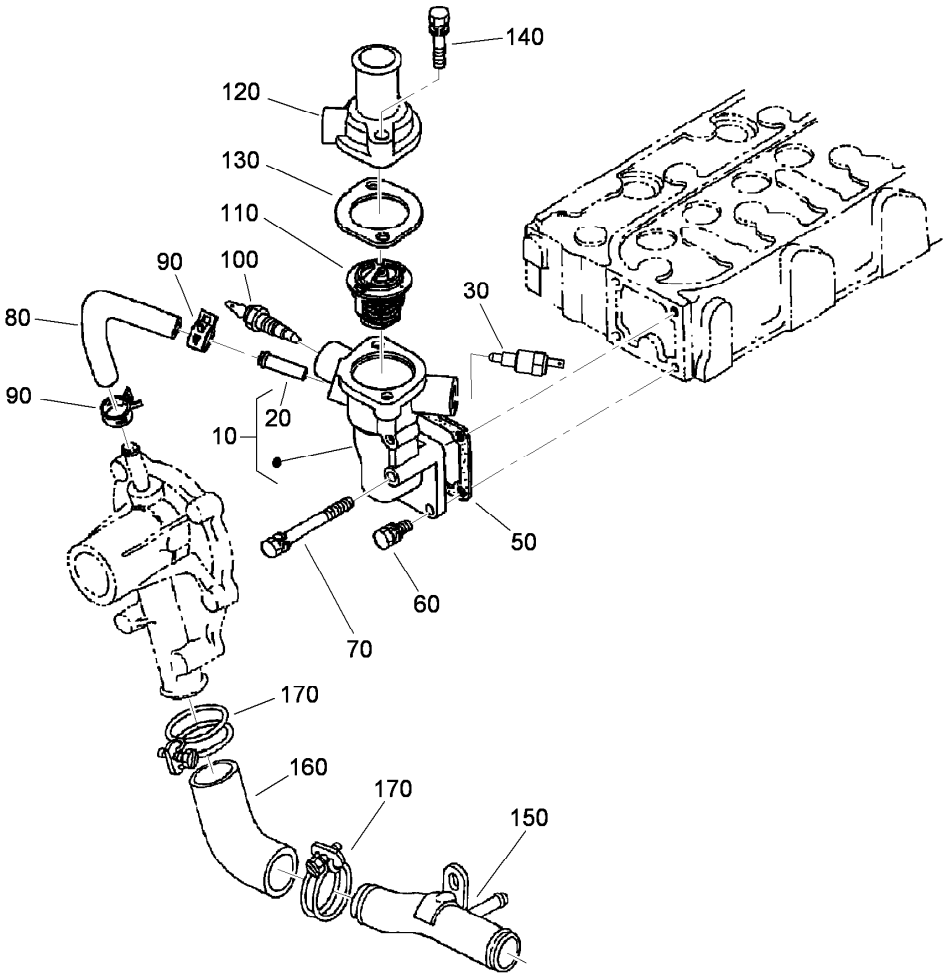

Water Flange and Thermostat Assembly

Ref.	Part Number	Qty.	Description
10	98-9713	1	Water Flange ASM
20	98-9580	1	Pipe-Return, Water
30	98-9719	1	Thermoswitch
50	98-9638	1	Gasket-Flange, Water
60	98-7692	3	Bolt
70	98-9356	1	Bolt
80	98-9578	1	Pipe-Return, Water
90	98-9579	2	Band-Pipe
100	112-0183	1	Switch-Thermometer
110	98-7778	1	Thermostat ASM
120	98-9471	1	Cover-Thermostat
130	105-3748	1	Gasket-Thermostat
140	98-7777	2	Bolt
150	99-8379	1	Pipe-Water
160	107-9091	1	Pipe-Water
170	98-9717	2	Clamp

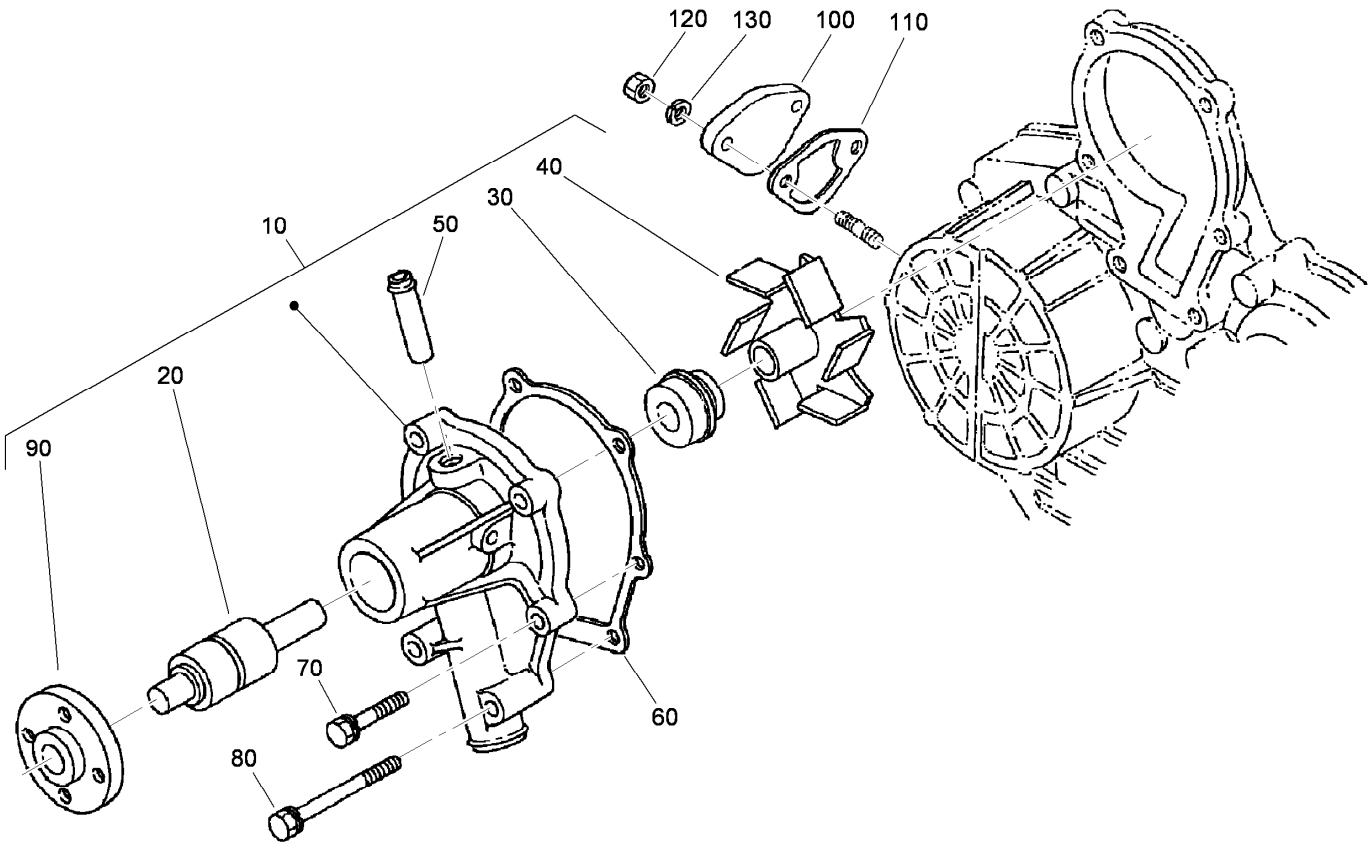

Water Pump Assembly

Ref.	*Part Number*	*Qty.*	*Description*
10	107-9089	1	Water Pump ASM
20	99-3517	1	Bearing-Pump, Water
30	105-3750	1	Mechanical Seal ASM
40	112-7017	1	Impeller-Pump, Water
50	100-1932	1	Pipe-Return, Water
60	99-3454	1	Gasket-Pump, Water
70	98-9353	4	Bolt
80	107-9090	2	Bolt
90	99-3516	1	Flange-Pump, Water
100	99-3514	1	Cover
110	98-9636	1	Gasket-Pump, Fuel
120	98-7572	2	Nut
130	98-7699	2	Washer-Spring

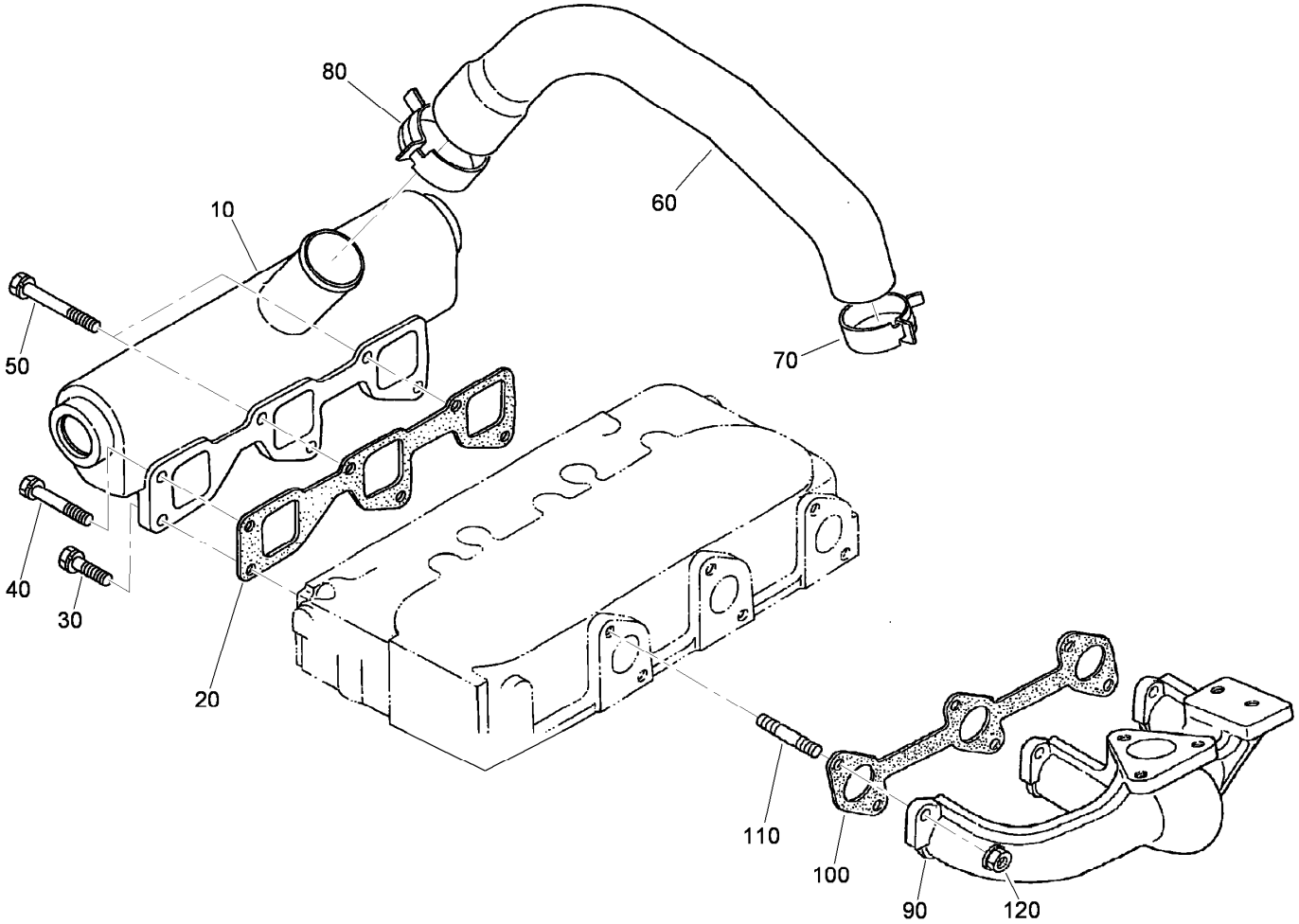

Inlet and Exhaust Manifold Assembly

Ref.	*Part Number*	*Qty.*	*Description*
10	99-8321	1	Manifold-Inlet
20	99-8329	1	Gasket-Manifold, Intake
30	98-7568	3	Bolt
40	107-9073	1	Bolt
50	99-8320	2	Bolt
60	115-3047	1	Hose-Inlet
70	115-3048	1	Clamp-Hose
80	115-3049	1	Clamp-Hose
90	108-1411	1	Manifold-Exhaust
100	99-8327	1	Gasket-Manifold, Exhaust
110	98-9588	6	Stud
120	98-9665	6	Nut

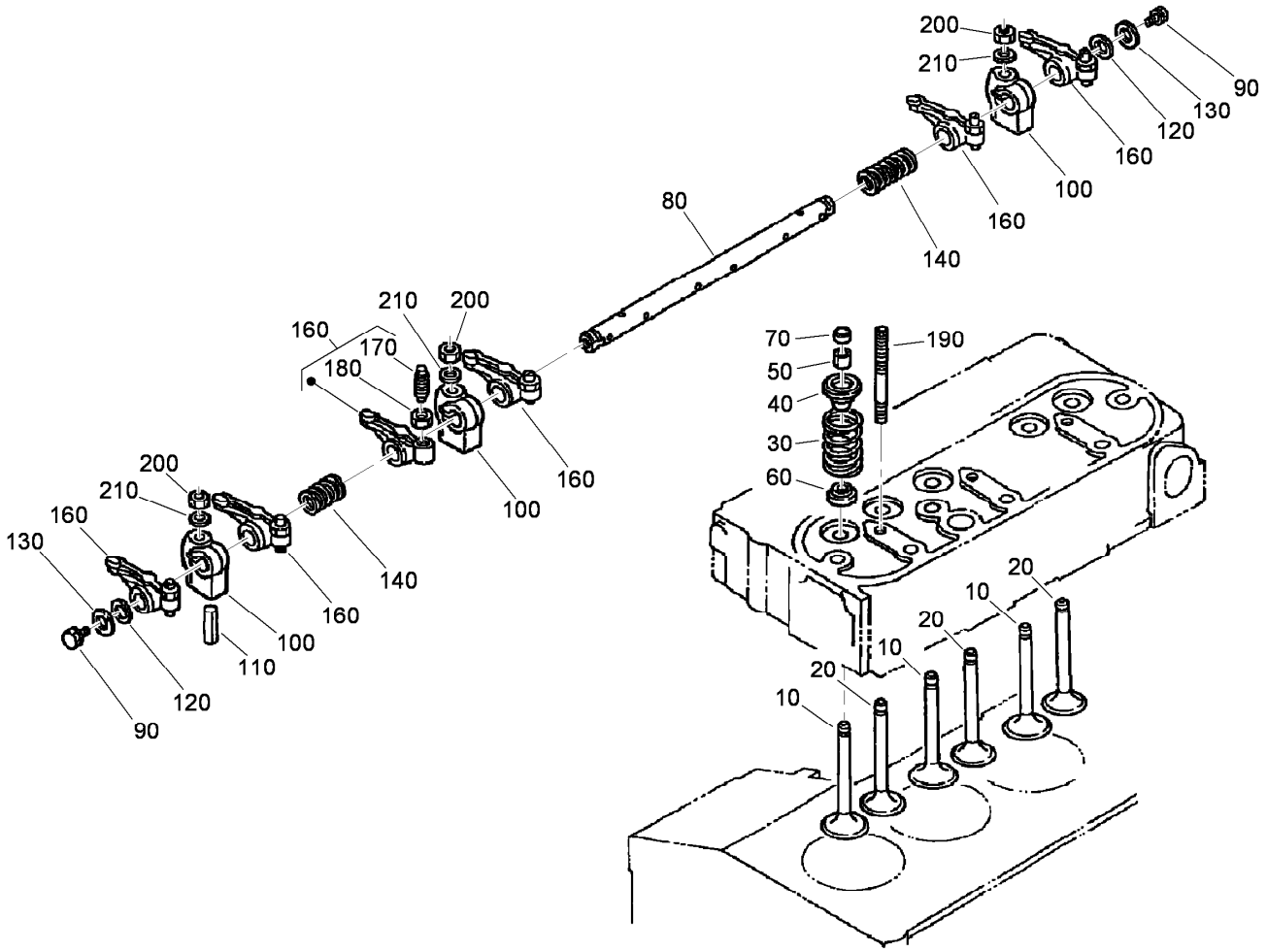

Valve and Rocker Arm Assembly

Ref.	Part Number	Qty.	Description
10	112-7018	3	Valve-Inlet
20	112-7019	3	Valve-Exhaust
30	98-9626	6	Spring-Valve
40	107-9092	6	Retainer-Spring
50	98-9390	6	Collet-Spring, Valve
60	99-8385	6	Seal-Stem, Valve
70	98-9497	6	Cap-Valve
80	105-3790	1	R-Arm Shaft ASM
90	100-9265	2	Bolt
100	98-9505	3	Bracket-Arm, Rocker
110	105-3758	1	Pin-Spring
120	98-9507	2	Washer-Shaft, R-Arm
130	110-3832	2	Washer-Plain
140	98-9504	2	Spring-Arm, Rocker
160	112-7020	6	Rocker Arm ASM
170	98-9502	6	Screw-Adjusting
180	98-9503	6	Nut
190	98-9506	3	Stud
200	98-9393	3	Nut
210	98-9385	3	Washer-Flat

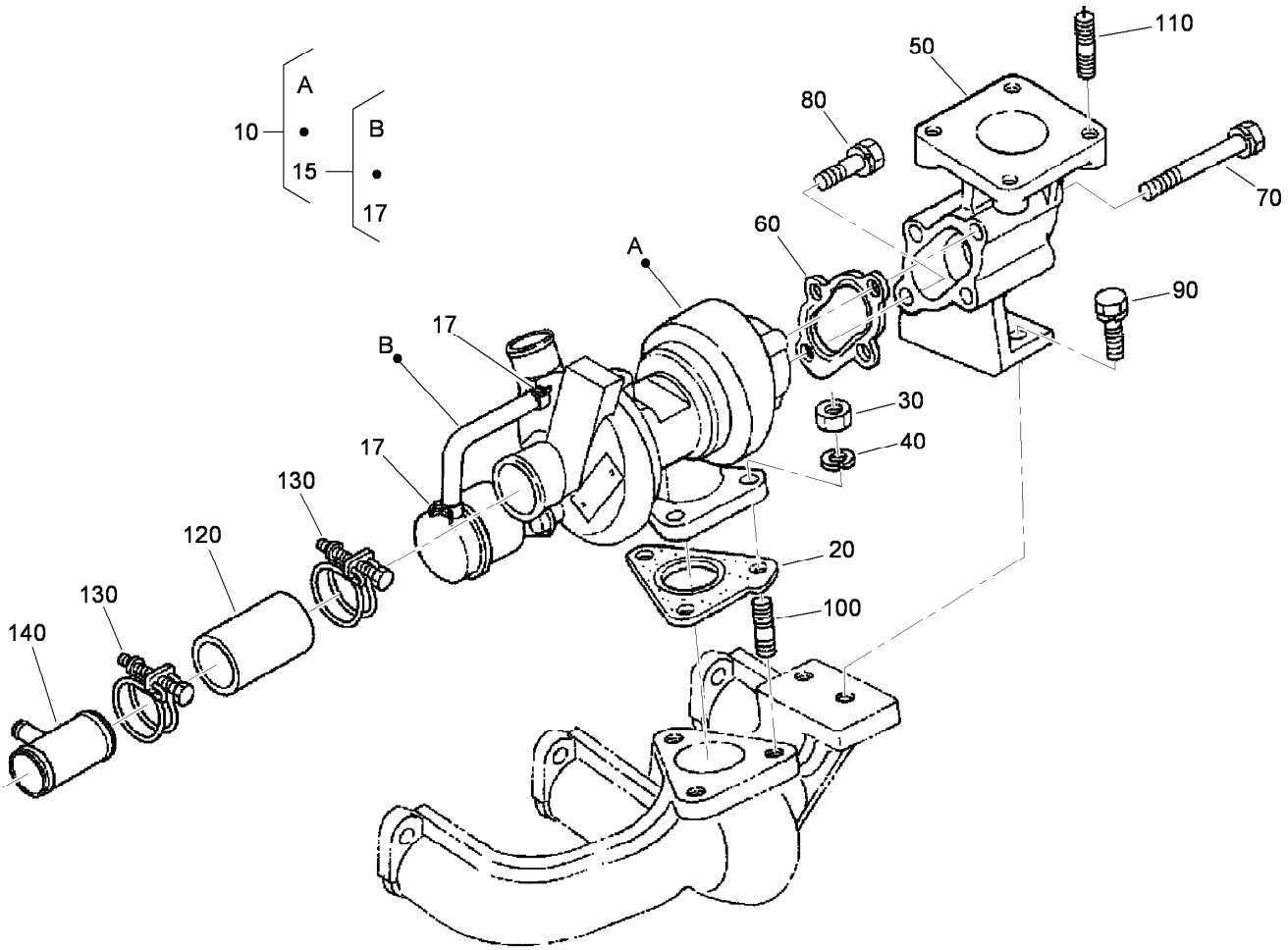

Turbo Charger Assembly

Ref.	*Part Number*	*Qty.*	*Description*
10	108-1412	1	Turbo Charger ASM
15	108-1413	1	Hose ASM
17	108-1414	2	Clamp-Hose
20	105-3767	1	Gasket
30	98-7534	3	Nut
40	105-2893	3	Washer-Spring
50	99-8335	1	Flange-Muffler
60	105-3768	1	Gasket
70	115-4100	3	Bolt
80	105-2895	1	Bolt
90	98-7610	2	Bolt
100	99-8342	3	Stud
110	98-7769	4	Stud
120	115-4101	1	Tube-Inlet, Turbo
130	115-4102	2	Band
140	115-4103	1	Pipe-Inlet, Breather

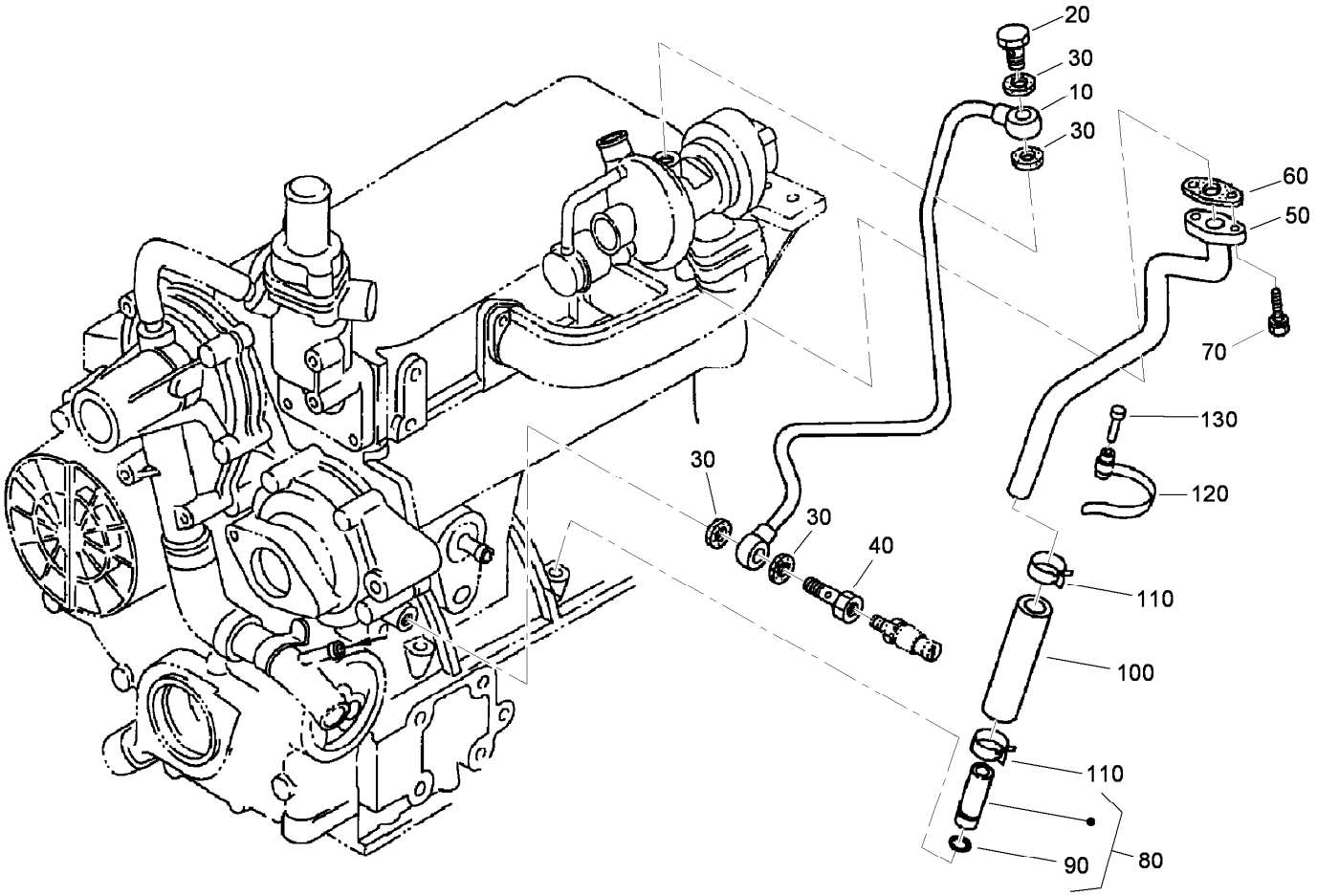

Turbo Charger Oil Pipe Assembly

Ref.	*Part Number*	*Qty.*	*Description*
10	98-9419	1	Oil Pipe ASM
20	98-9418	1	Bolt-Joint, Eye
30	99-8346	4	Gasket
40	98-9417	1	Bolt-Joint, Eye
50	98-9461	1	Pipe Line ASM
60	108-4422	1	Gasket
70	98-7605	2	Bolt
80	99-8383	1	Oil Pipe ASM
90	98-9722	1	O-Ring
100	98-9721	1	Pipe-Oil
110	98-9714	2	Clamp-Hose
120	98-9601	1	Clamp-Pipe
130	98-9591	1	Pin-Band

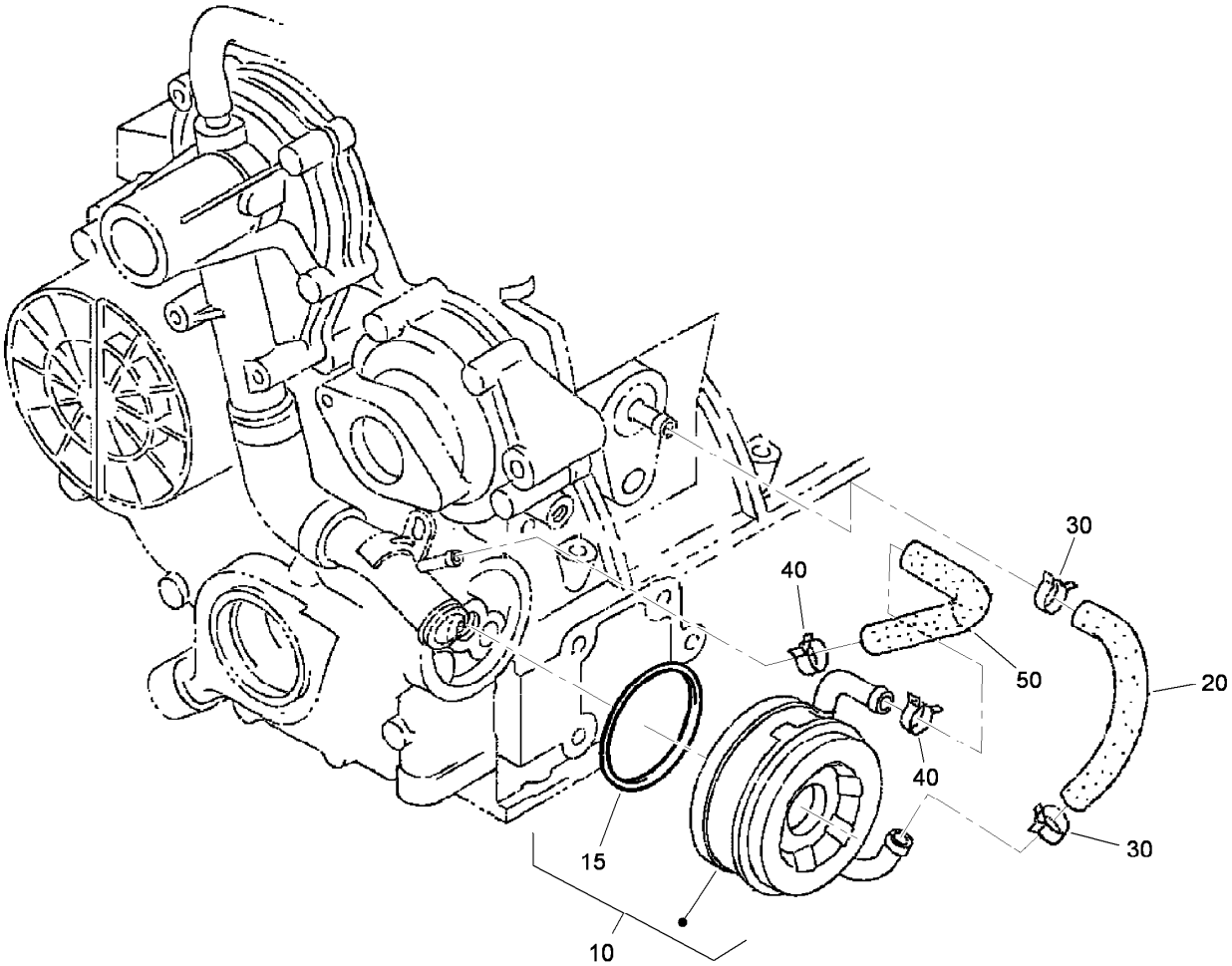

Oil Cooler Assembly

Ref.	*Part Number*	*Qty.*	*Description*
10	104-5158	1	Oil Cooler ASM
15	112-7030	1	O-Ring
20	98-9724	1	Pipe-Cooler, Oil
30	98-9579	2	Band-Pipe
40	98-9579	2	Band-Pipe
50	98-9578	1	Pipe-Return, Water

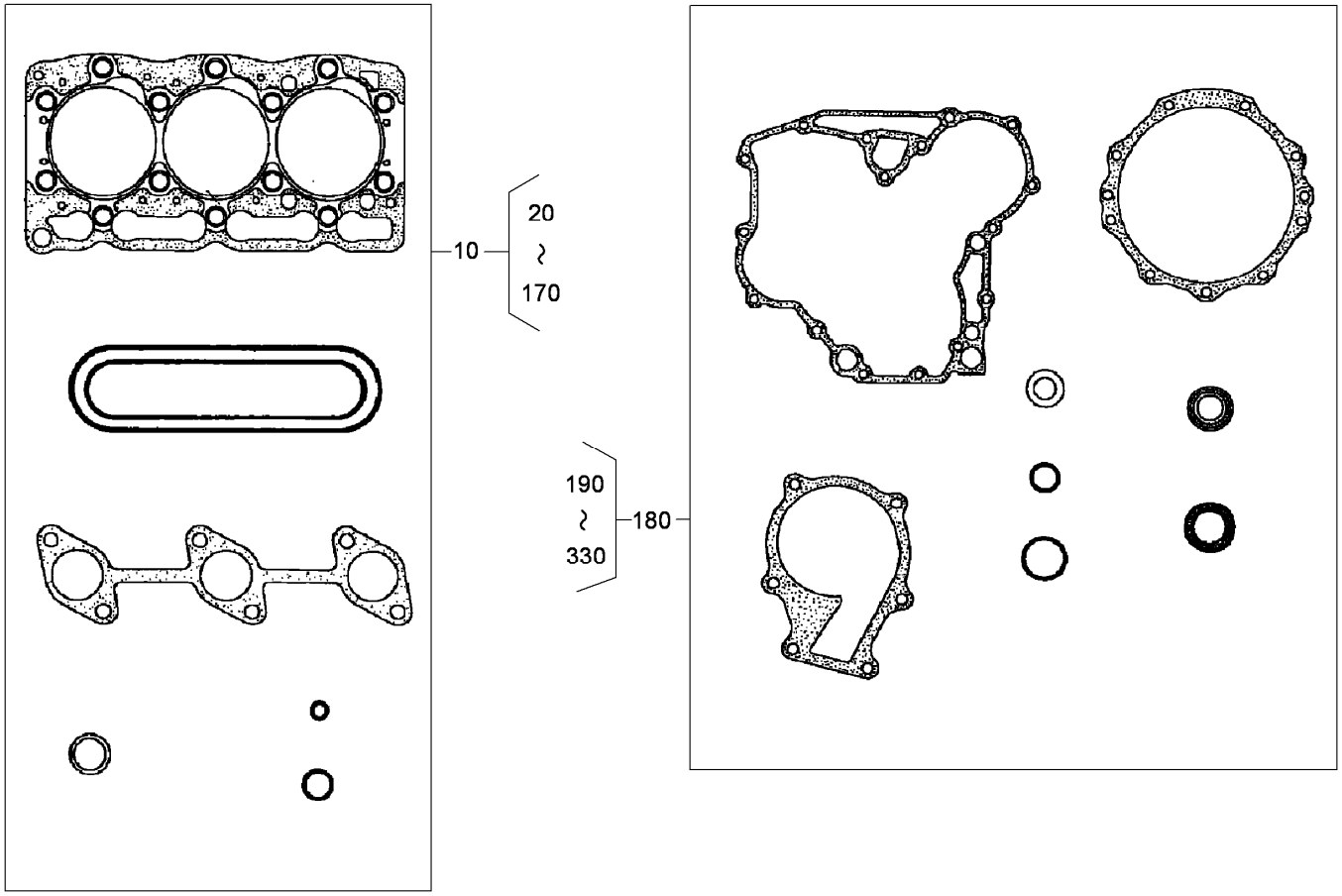

Gasket Kit

Ref.	Part Number	Qty.	Description
10	108-1415	1	Upper Gasket Kit
20	108-6573	1	Gasket-Head, Cylinder ●
40	99-8329	1	Gasket-Manifold, Intake ●
50	105-3767	1	Gasket ●
60	105-3768	1	Gasket ●
70	99-8327	1	Gasket-Manifold, Exhaust ●
80	99-8385	6	Seal-Stem, Valve ●
90	98-9615	1	Gasket-Cover, Head ●
100	98-9454	3	Gasket ●
110	99-3446	1	O-Ring ●
120	99-8346	4	Gasket ●
130	108-4422	1	Gasket ●
140	98-9722	1	O-Ring ●
150	98-9638	1	Gasket-Flange, Water ●
160	105-3748	1	Gasket-Thermostat ●
170	99-8343	1	Gasket-Muffler ●
180	112-7041	1	Lower Gasket Kit

Ref.	Part Number	Qty.	Description
190	98-9632	1	Gasket-Pump, Water ●
200	98-9633	1	Gasket-Case, Gear ●
210	105-3781	2	O-Ring ●
220	105-3777	2	O-Ring ●
230	98-9634	1	Gasket-Case, Bearing ●
240	98-9635	1	Gasket-Cover, Bearing Case ●
250	105-3783	1	O-Ring ●
260	105-3776	1	O-Ring ●
270	98-9729	1	O-Ring ●
280	98-9636	1	Gasket-Pump, Fuel ●
290	98-9682	1	Gasket ●
300	105-3788	1	O-Ring ●
310	98-7601	1	Seal-Oil ●
320	98-9637	1	Gasket ●
330	98-9683	1	Gasket-Cover, Solenoid ●

● Not illustrated

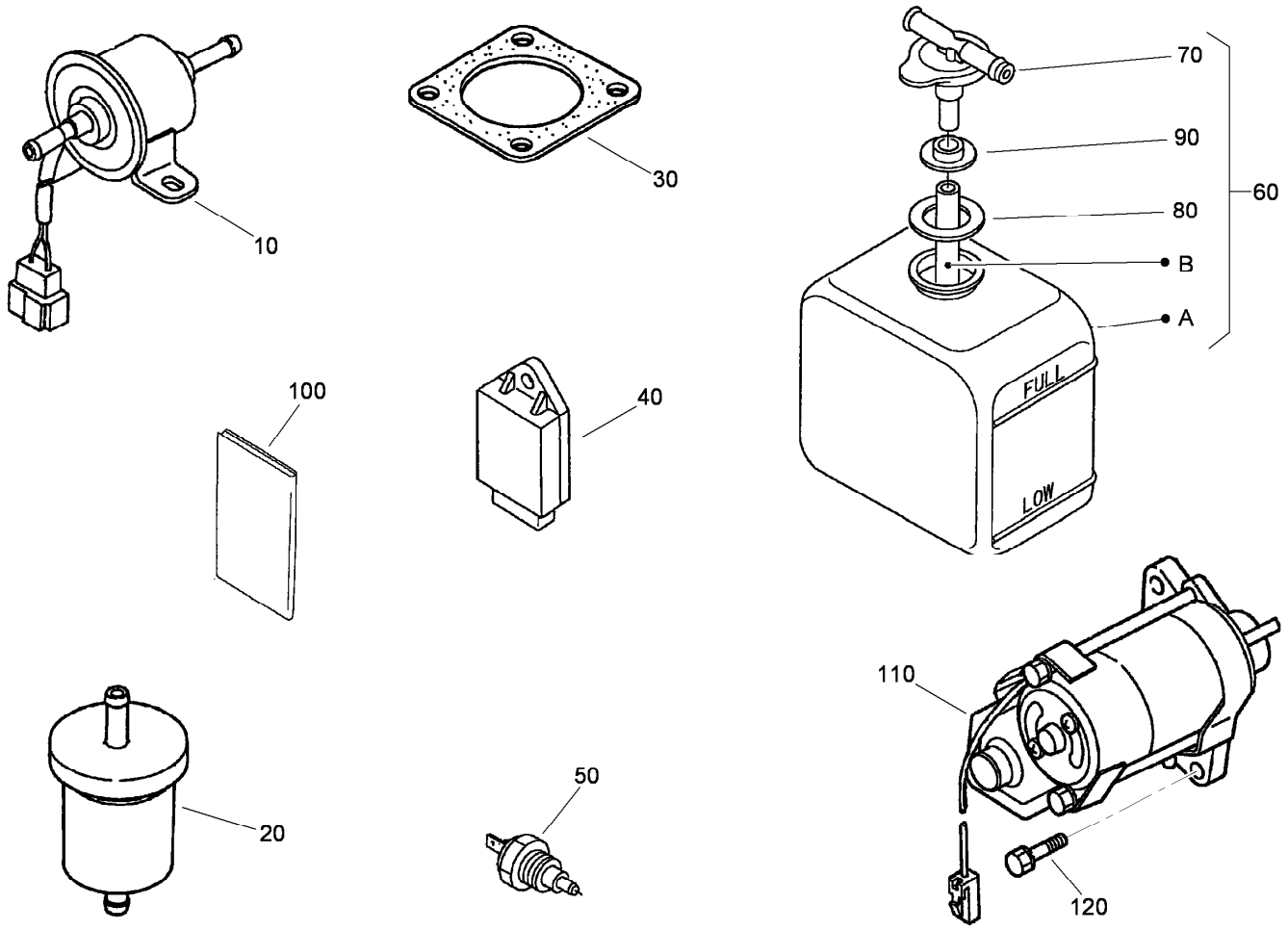

Electric Fuel Pump, Fuel Filter, Starter and Overflow Bottle Assemblies

Ref.	*Part Number*	*Qty.*	*Description*
10	107-0122	1	Pump-Fuel, Electric
20	98-7612	1	Filter-Fuel
30	99-8343	1	Gasket-Muffler
40	98-7611	1	Controller-Glow
50	98-9719	1	Thermoswitch
60	108-0638	1	Bottle-Overflow
70	105-3754	1	Cap
80	105-3755	1	Gasket
90	105-3756	1	Plate
100	115-4104	1	Operator Manual
110	98-9705	1	Starter ASM
120	98-7697	2	Bolt

Attachments and Accessories

For 30363TC Groundsmaster 7210 Traction Unit with 72in Side Discharge Mower

Product Name	Model/Part
Tooth Rake	08751
Finish Grader	08754
Drag Mat Carrier System	08756
Steel Drag Mat	08757
Coco Drag Mat	08758
Lug Tire (24 X 12 - 12)	103-6771
Bahiagrass Baffle Kit	105-7269
Blade-Belt Kit, 62 Inch Guardian Only	105-7270
Blade-Belt Kit, 72 Inch Guardian Only	105-7271
Blade-Belt Kit, 72 Inch Side Discharge Only	105-7272
Striping Kit, 72 Inch Side Discharge Only	105-7273
Yellow Hydraulic Cap	107-1576
Green Diesel Cap	107-2172
Premium Engine Oil, 15w40 (Drum)	108-1181
Premium Engine Oil, 15w40 (Pail)	108-1182
Premium Transmission/Hydraulic Tractor Fluid (Drum)	108-1183
Premium Transmission/Hydraulic Tractor Fluid (Pail)	108-1184
Leaf Mulching Kit	108-5273
Wheel and Tire ASM (Semi Pneumatic)	110-6406
Spark Arrestor Kit	112-1688
Bio-Diesel Fuel Filter Kit	112-9140
Slow Moving Vehicle Kit	114-4050
5 Inch Air Cleaner Safety Element	114-4057
Weight Mount Bracket Kit	114-4090
42-pound Weight, For Kit 114-4090	114-4096
60-Amp Alternator Kit, Kubota 05 Series-Powered Traction Unit	117-5540
Overflow Tank Kit	117-5570
Fender Kit	117-9170
Roll-Over Protection Kit	117-9179
CE Kit, Groundsmaster 7200 Traction Unit with 60-inch Mower	117-9248
CE Kit, Grass Collection System for Groundsmaster 7200 Series with 60-inch Mower	117-9249
Brake Service Kit	120-0015
MVP (Filter) Kit	30037
400-hour Filter Maintenance Kit	30052
Guardian Recycler Completion Kit	30304
62 Inch Guardian Recycler Completion Kit	30306
Guardian Fine Recycler Completion Kit	30346
Recycler Kit, 72 Inch Side Discharge Mower	30347
Recycler Kit	30348
Hardtop Sunshade	30359
Polar Trac Kit	30370
Polar Trac Cab	30371
Road Light Kit	30374
Z-Stand Kit	30375
Rear Quick Attach System	30377
V-Plow Mounting Kit	30378

Auxiliary Hydraulic Power Kit 30380
Auxiliary Power Unit 30382
CE Kit 30392
Debris Blower 30393
Grass Collection System, Groundsmaster 7200 Series with 60-inch Mower 30460
Rear Discharge Kit, 62 Inch Base Mower 30463
Rear Discharge Kit, 72 Inch Base Mower 30466
48in V-Plow 30750

Notes:

Notes:

Notes:

TORO®

Count on it.