Form No. 3369-628 Rev A

TORO®

Count on it.

Operator's Manual

8, 11 and 14 Blade DPA Reel Mower

Greensmaster® 3000 Series Traction Unit

Model No. 04618—Serial No. 312000001 and Up

Model No. 04619—Serial No. 312000001 and Up

Model No. 04624—Serial No. 312000001 and Up

To register your product or download an *Operator's Manual* or *Parts Catalog* at no charge, go to www.Toro.com.

Original Instructions (EN)

Introduction

Read this information carefully to learn how to operate and maintain your product properly and to avoid injury and product damage. You are responsible for operating the product properly and safely.

You may contact Toro directly at www.Toro.com for product and accessory information, help finding a dealer, or to register your product.

Whenever you need service, genuine Toro parts, or additional information, contact an Authorized Service Dealer or Toro Customer Service and have the model and serial numbers of your product ready. Figure 1 identifies the location of the model and serial numbers on the product. Write the numbers in the space provided.

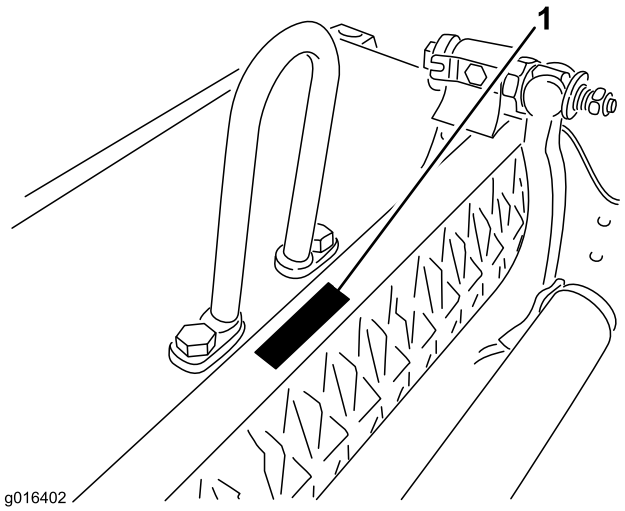

Figure 1

1. Location of the model and serial numbers

Model No. _____

Serial No. _____

This manual identifies potential hazards and has safety messages identified by the safety alert symbol (Figure 2), which signals a hazard that may cause serious injury or death if you do not follow the recommended precautions.



Figure 2

1. Safety alert symbol

This manual uses 2 other words to highlight information. **Important** calls attention to special mechanical information and **Note** emphasizes general information worthy of special attention.

Contents

Introduction 2
Safety 3
    Safety and Instructional Decals 3
Setup 4
    1 Installing the Front Roller 4
    2 Installing the Hoop Link, Offset Link or Chain Link 4
    3 Propping up the Cutting Unit 5
    4 Repositioning the Counter Weights 6
    5 Adjusting the Bedknife to the Reel 6
    6 Adjusting the Rear Roller 7
    7 Adjusting the Height of Cut 8
    8 Adjusting the Cut-Off Bar 9
Product Overview 11
    Specifications 11
    Attachments/Accessories 11
Operation 12
    Cutting Unit Characteristics 12
    Daily Adjustments of Cutting Unit 12
Maintenance 13
    Servicing the Bedbar 13
    Backlapping the Reel 14

© 2011—The Toro® Company
8111 Lyndale Avenue South
Bloomington, MN 55420

Contact us at www.Toro.com.
Printed in the USA.
All Rights Reserved

Safety

Hazard control and accident prevention are dependent upon the awareness, concern, and proper training of the personnel involved in the operation, transport, maintenance, and storage of the machine. Improper use or maintenance of the machine can result in injury or death. To reduce the potential for injury or death, comply with the following safety instructions.

- Read, understand, and follow all instructions in the traction unit and cutting unit operators manual's before operating the cutting unit.
- Never allow children to operate the traction unit or cutting units. Do not allow adults to operate traction unit or cutting units without proper instruction. Only trained operators who have read this manual should operate the traction unit or cutting units.
- Never operate the cutting units when under the influence of drugs or alcohol.
- Keep all shields and safety devices in place. If a shield, safety device or decal is illegible or damaged, repair or replace it before operation is commenced. Also tighten any loose nuts, bolts, and screws to ensure cutting unit is in safe operating condition.
- Always wear substantial shoes. Do not operate cutting units while wearing sandals, tennis shoes, sneakers or shorts. Also, do not wear loose fitting clothing which could get caught in moving parts. Always wear long pants and substantial shoes. Wearing safety glasses, safety shoes and a helmet is advisable and required by some local ordinances and insurance regulations.
- Remove all debris or other objects that might be picked up and thrown by the cutting unit reel blades. Keep all bystanders away from the working area.
- If the cutting blades strike a solid object or the unit vibrates abnormally, stop and shut the engine off. Check cutting unit for damaged parts. Repair any damage before restarting and operating the cutting unit.
- Lower the cutting units to the ground and remove key from ignition switch whenever machine is left unattended.
- Be sure cutting units are in safe operating condition by keeping nuts, bolts and screws tight.
- Remove key from ignition switch to prevent accidental starting of the engine when servicing, adjusting or storing the machine.
- Perform only those maintenance instructions described in this manual. If major repairs are ever needed or assistance is desired, contact an Authorized Toro Distributor.
- To ensure optimum performance and safety, always purchase genuine Toro replacement parts and accessories to keep the Toro all TORO. **Never use "will-fit" replacement parts and accessories made by other manufacturers.** Look for the Toro logo to assure genuineness. Using unapproved replacement parts and accessories could void the warranty of The Toro Company.

Safety and Instructional Decals

Safety decals and instructions are easily visible to the operator and are located near any area of potential danger. Replace any decal that is damaged or lost.

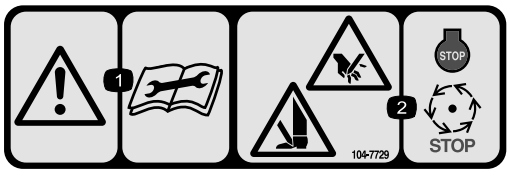

104–7729

1. Warning—read the instructions before servicing or performing maintenance.
2. Cutting/dismemberment hazard; hand or foot—stop the engine and wait for moving parts to stop.

Setup

Media and Additional Parts

Description	Qty.	Use
Ball stud	2	Mount to roller
Operator's Manual	1	Read before installing and operating cutting unit
Parts catalog	1	Use to reference part numbers
Certification of compliance	1	CE Certification

1

Installing the Front Roller

No Parts Required

Procedure

The cutting unit is shipped without a front roller. Install the roller using the loose parts supplied with the cutting unit and installation instructions included with the roller.

2

Installing the Hoop Link, Offset Link or Chain Link

No Parts Required

Procedure

For cutting units that will be mounted on a traction unit with a serial number prior to 240000001, the proper lift link must be obtained and installed.

Note: The (2) capscrews used to mount the lift link are shipped installed on the cutting unit.

The Hoop Link, part No. 105-5740 is required for installation on the Greensmaster 3000, 3000-D, 3050, 3100, 3150 and 3150-Q traction units. (supplied with the above Greensmaster traction units)

Install the hoop link to the top of the cutting unit with (2) capscrews. Torque the capscrews to 25-30 ft-lbs. (34-40 N-m) (Figure 3).

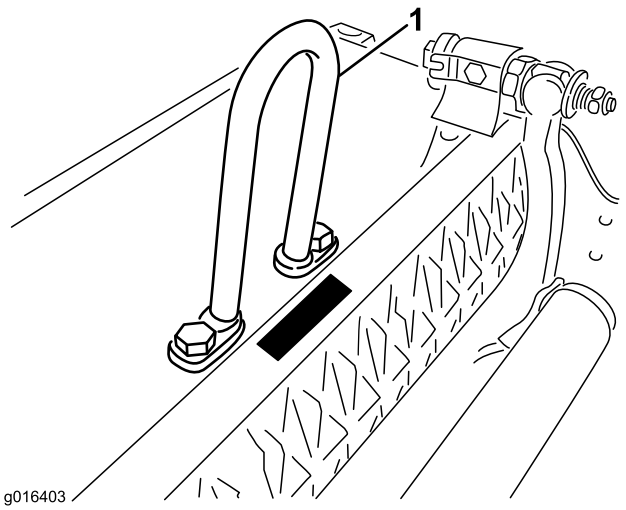

Figure 3

1. Hoop link

The Offset Link, part No. 110–2397 is required for installation on the Greensmaster 3250-D traction units (supplied with the Greensmaster 3250-D traction unit).

Install the offset link (Figure 4) to the top of the cutting unit with (2) capscrews. Torque the capscrews to 25-30 ft-lbs. (34-40 N-m).

Important: Position the lift hook offset towards the front of the cutting unit.

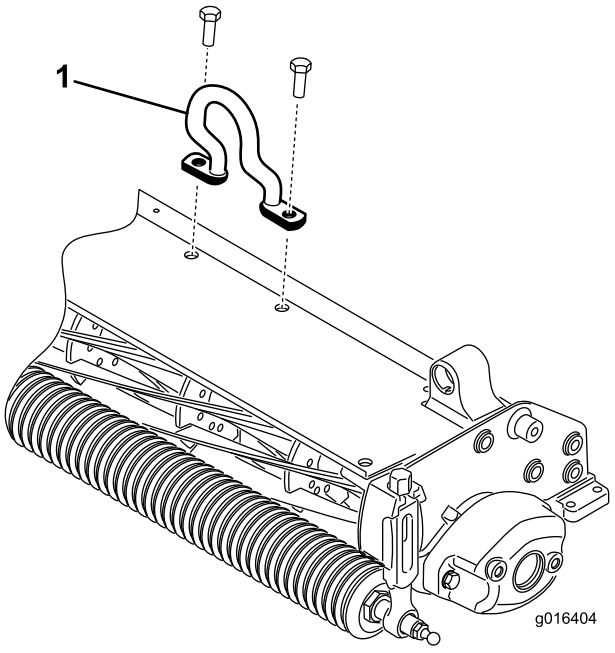

Figure 4

1. Offset lift hook

The Chain Link, part no. 106-2601 and mounting bracket, part no. 105-5738 may also be used on the Greensmaster 3250-D traction unit.

Install chain link to the top of the cutting unit with the mounting bracket and (2) capscrews. Torque the capscrews to 25-30 ft-lbs. (34-40 N-m). (Figure 5).

Note: When mounting the cutting unit to the traction unit, hook the wider end of the chain link to the lift arm.

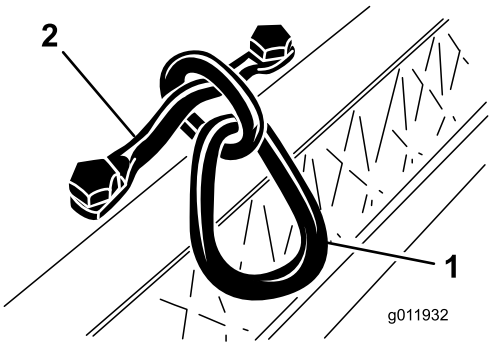

Figure 5

1. Chain link
2. Mounting bracket

3

Propping up the Cutting Unit

No Parts Required

Procedure

Whenever the cutting unit has to be tipped to expose the bedknife/reel, prop up the rear of the cutting unit to make sure the nuts on the back end of the bedbar adjusting screws are not resting on the work surface (Figure 6).

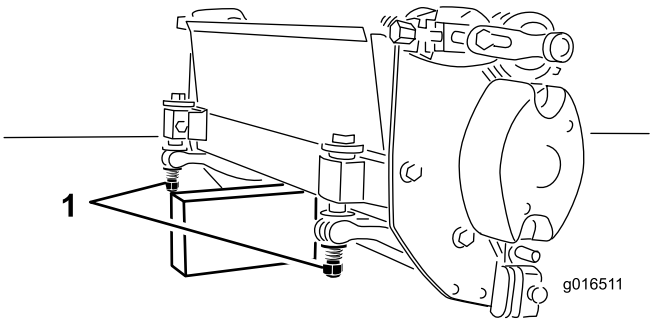

Figure 6

1. Bedknife adjusting screw nut (2)

4

Repositioning the Counter Weights

No Parts Required

Procedure

The cutting units are shipped with the counter weight mounted to the right end and the motor mount to the left end of the cutting unit. To change the cutting unit to different positions, proceed as follows:

1. Remove the 2 capscrews securing the counter weight to the right end of the cutting unit. Remove the counter weight (Figure 7).

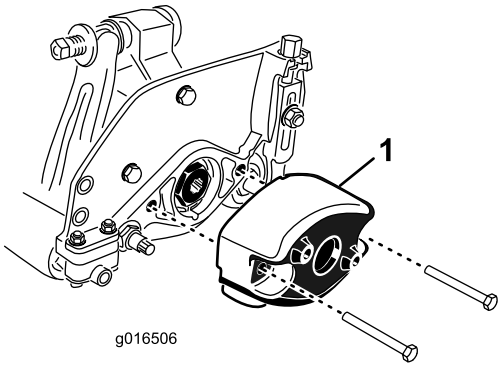

Figure 7

1. Counter weight

2. Remove the (2) Allen head screws securing the motor mount to the left end of the cutting unit. Remove the motor mount (Figure 8).
3. Apply grease to the inside diameter of the drive spline (Figure 8).

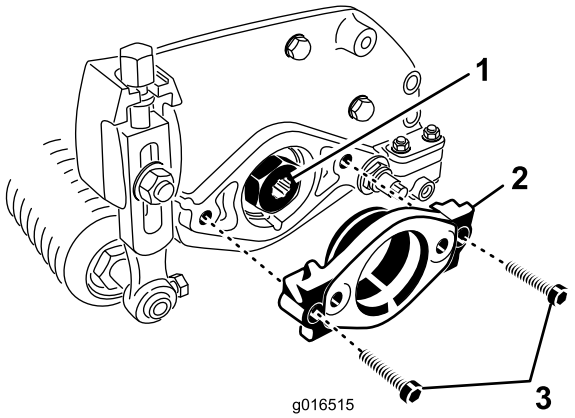

Figure 8

1. Drive spline
2. Motor mount
3. Allen head screw (2)

4. On the right end of the cutting unit, apply a light coating of oil to the O-ring and install the motor mount with the (2) Allen head screws previously removed. Torque the screws to 12-15 ft-lbs. (16-20 N-m).
5. On the left end of the cutting unit, apply a light coating of oil to the O-ring and install the counter weight with the screws previously removed. Torque the screws to 12-15 ft-lbs. (16-20 N-m).

5

Adjusting the Bedknife to the Reel

No Parts Required

Procedure

The bedknife to reel adjustment is accomplished by loosening or tightening the bedbar adjusting screws, located on top of mower.

1. Position the machine on a flat, level work surface. Make sure reel contact is removed by turning the bedbar adjusting screws counterclockwise (Figure 9).

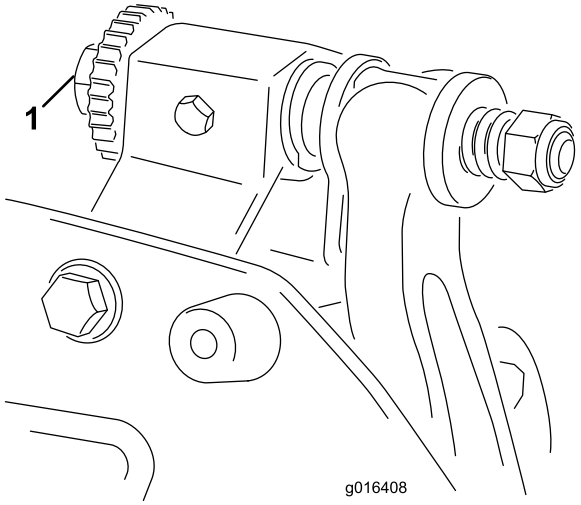

Figure 9

1. Bedbar adjusting screw

2. Tip the mower, to expose the bedknife and reel. **Make sure nuts on back end of bedbar adjusting screws are not resting on work surface (Figure 6).**

3. At one end of reel, insert a long strip of newspaper between reel and bedknife (Figure 10). While slowly rotating reel forward, turn bedbar adjusting screw clockwise (on same end of reel, one click at a time, until paper is pinched lightly, when inserted from the front, parallel to the bedknife. A slight drag will be noted as the paper is pulled.

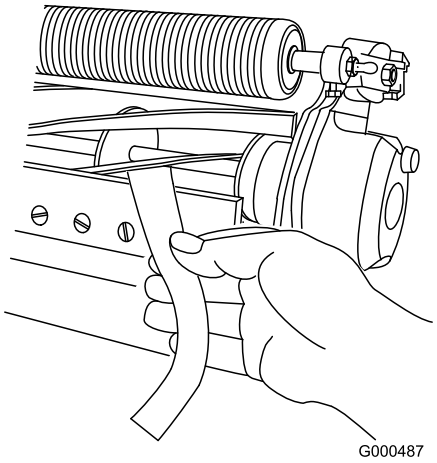

Figure 10

Note: Each time the adjusting screw is rotated one click clockwise, the bedknife moves .0007 in. closer to the reel. **Do not overtighten the adjusting screws.**

4. Check for light contact at other end of reel using paper and adjust as required.

5. After the adjustment is accomplished, check to see if the reel can pinch paper when inserted from the front and cut the paper when inserted at a right angle to the bedknife (Figure 10). It should be possible to cut the paper with minimum contact between the bedknife and the reel blades. Should excessive reel drag be evident, it will be either necessary to backlap or regrind the cutting unit to achieve the sharp edges needed for precision cutting (see the Toro Reel Sharpening Manual).

6

Adjusting the Rear Roller

No Parts Required

Procedure

1. Adjust the rear roller brackets (Figure 11 or Figure 12) to the low or high position depending on the desired height of cut range.

   Position the spacer above the sideplate mounting flange (factory setting) when height of cut settings range from 1/16 to 1/4 inch (Figure 11).

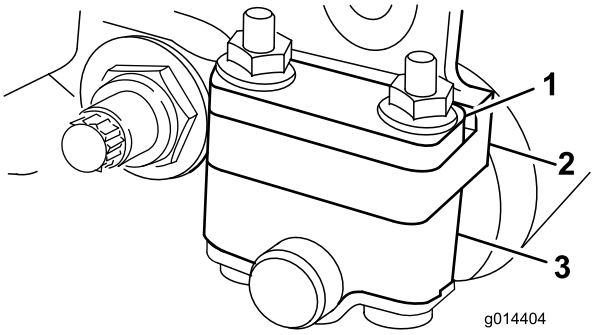

Figure 11

1. Spacer
2. Roller bracket
3. Sideplate mounting flange

   Position the spacer below the sideplate mounting flange when height of cut settings range from 1/8 to 1 inch (Figure 12).

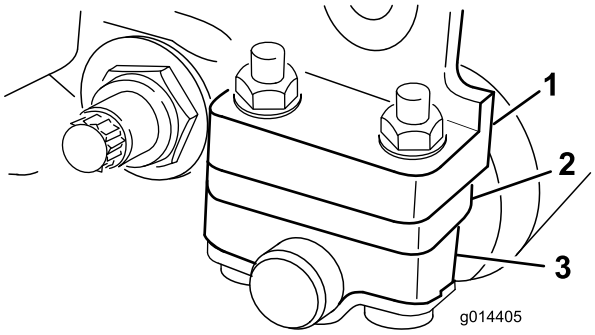

Figure 12

1. Spacer
2. Roller bracket
3. Sideplate mounting flange

2. To adjust rear roller proceed as follows:
   A. Raise the rear of the cutting unit and place a block under the bedknife.
   B. Remove the (2) nuts securing each roller bracket and spacer to each sideplate mounting flange.
   C. Lower the roller and screws from the sideplate mounting flanges and spacers.
   D. Place the spacers onto the screws on the roller brackets.
   E. Re-secure the roller bracket and spacers to the underside of the mounting flanges with the nuts previously removed.
3. Verify that the bedknife to reel contact is correct. Tip the mower to expose the front and rear rollers and the bedknife.

   Note: The position of the rear roller to the reel is controlled by the machining tolerances of the assembled components and paralleling is not required. A limited amount of adjustment is possible by setting the cutting unit on a surface plate and loosening the sideplate mounting capscrews (Figure 13). Adjust and re-tighten capscrews.

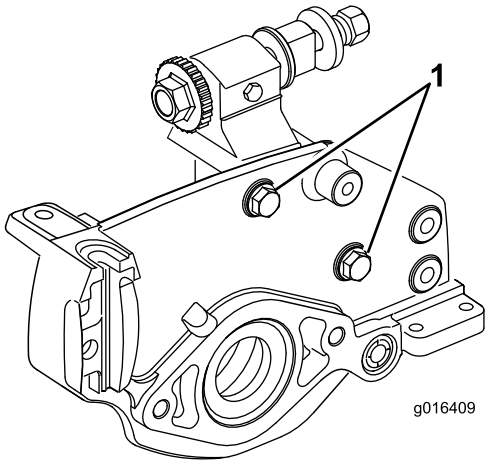

Figure 13

1. Sideplate mounting capscrews

Important: Whenever the cutting unit has to be tipped to expose the bedknife/reel, prop up the rear of the cutting unit to make sure the nuts on the back end of the bedbar adjusting screws are not resting on the work surface (Figure 6).

7

Adjusting the Height of Cut

No Parts Required

Procedure

Note: For heights of cut greater than .500 inch, the high height of cut kit must be installed.

1. Loosen the locknuts securing the height-of-cut arms to the cutting unit side plates (Figure 14).

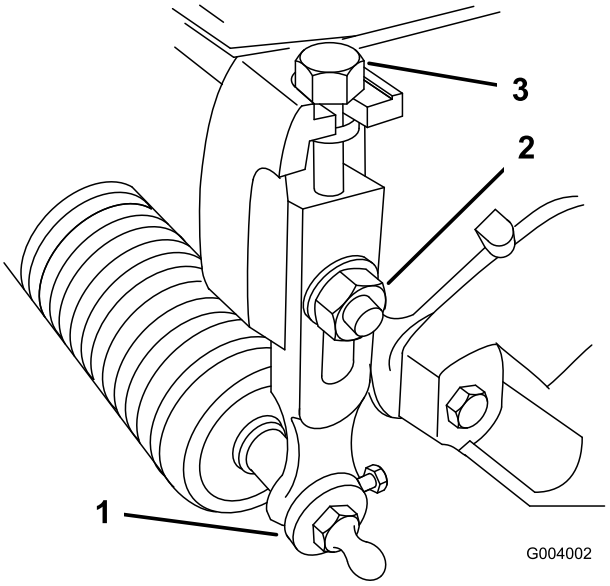

Figure 14

1. Height-of-cut arm
2. Locknut
3. Adjusting screw

2. Loosen the nut on the gauge bar and set the adjusting screw to the desired height-of-cut (Figure 15). The distance between the bottom of the screw head and the face of bar is the height-of-cut.

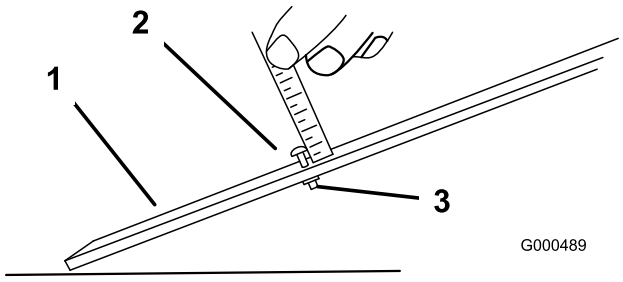

Figure 15

1. Gauge bar
2. Height adjusting screw
3. Nut

3. Hook the screw head onto the cutting edge of the bedknife and rest the rear end of the bar onto the rear of the roller (Figure 16).

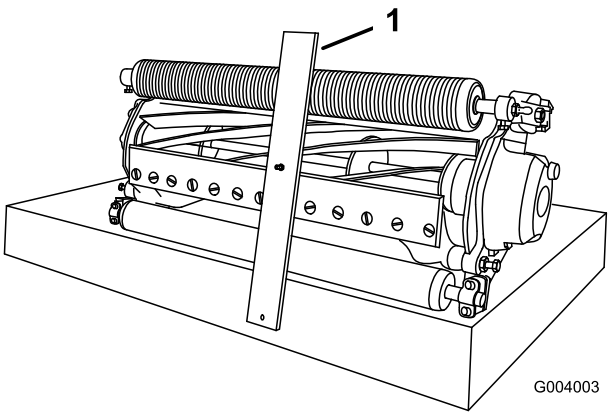

Figure 16

1. Gauge bar

4. Rotate the adjusting screw until the front roller contacts the gauge bar. Adjust both ends of the roller until the entire roller is parallel to the bedknife.

   Important: When set properly, the rear and front rollers will contact the gauge bar and the screw will be snug against the bedknife. This ensures that the height-of-cut is identical at both ends of the bedknife.

5. Tighten the nuts to secure the adjustment. Do not overtighten the nut. Tighten enough to remove play from the washer.

   Note: Use the following chart to determine which bedknife is best suited for the desired height of cut.

Recommended Bedknife/Height of Cut Chart

Bedknife	Part Number	Height of Cut
Edgemax Micro-cut (Standard)	115-1880	0.062–0.188 inch (1.5–4.7 mm)
Edgemax Tournament (Optional)	115-1881	0.125–0.500 inch (3.1–12.7 mm)
Micro-cut (Optional)	93-4262	0.062–0.188 inch (1.5–4.7 mm)
Tournament (Optional)	93-4263	0.125–0.500 inch (3.1–12.7 mm)
Extended Micro-cut (Optional)	108-4303	0.062–0.188 inch (1.5–4.7 mm)
Extended Tournament (Optional)	108-4302	0.125–0.500 inch (3.1–12.7 mm)
Low-cut (Optional)	93-4264	0.188–1.00 inch (4.7–25.4 mm)
High-cut (Optional)	94-6392	0.312–1.00 inch (7.9–25.4 mm)
Fairway (Optional)	63-8600	0.375–1.00 inch (9.5–25.4 mm)

8

Adjusting the Cut-Off Bar

No Parts Required

Procedure

Adjust the cut-off bar to assure the clippings are cleanly discharged from the reel area:

1. Loosen the screws securing the top bar (Figure 17) to the cutting unit.

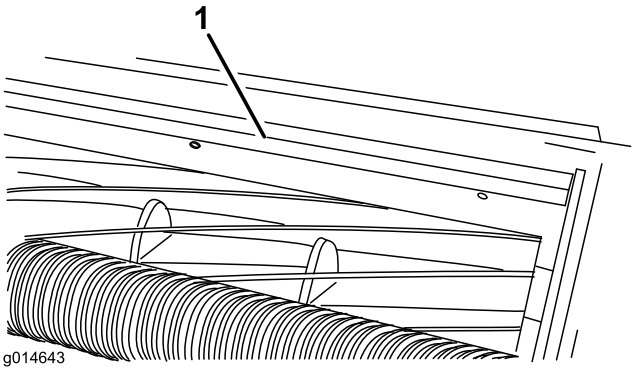

Figure 17

1. Cut-off bar

2. Insert a .060 inch feeler gauge between the top of the reel and the bar and tighten the screws. Ensure the bar and reel are equal distance apart across the complete reel.

   Note: The bar is adjustable to compensate for changes in turf conditions. The bar should be adjusted closer to the reel when the turf is extremely dry. By contrast, adjust the bar further away from the reel when the turf conditions are wet. The bar should be parallel to the reel to ensure optimum performance and should be adjusted whenever the reel is sharpened on a reel grinder.

Product Overview

Specifications

Tractors	These cutting units will mount on the Greensmaster 3000, 3000-D, 3050, 3100, 3150, 3250-D and 3150-Q Traction Units.
Height of Cut	Cutting height is adjusted on the front roller by two vertical screws and held by two locking cap screws
Height Of Cut Range	Standard bench height of cut range is .062 inch (1.6 mm) to .500 inch (12.7 mm). Bench height of cut range with the High Height of Cut Kit installed is .285 inch (7 mm) to 1.00 inch (25 mm). Effective HOC may vary depending on turf conditions, type of bedknife, rollers and attachments installed.
Reel Bearings	Two sealed stainless steel, deep groove ball bearings.
Rollers	The rear roller is a 2 inch (5.1 cm) diameter steel full roller.
Bedknife	Replaceable single edged, high carbon steel bedknife is fastened to a machined cast iron bedbar with 13 screws.
Bedknife Adjustment	Dual screw adjustment to the reel; detents corresponding to .0007 inch (.018 mm) bedknife movement for each indexed position.
Grass Shield	Non-adjustable shield with adjustable cut-off bar to improve grass discharge from reel in wet conditions.
Counterweight	A cast iron weight mounted opposite to the drive motor balances the cutting unit.
Net Weight	8 Blade – 65 lb. (30 kg), 11 Blade – 68 lb. (31 kg), 14 Blade – 71 lb. (32 kg)

Attachments/Accessories

A selection of Toro approved attachments and accessories are available for use with the machine to enhance and expand its capabilities. Contact your Authorized Service Dealer or Distributor or go to www.Toro.com for a list of all approved attachments and accessories.

Operation

Note: Determine the left and right sides of the machine from the normal operating position.

Cutting Unit Characteristics

The dual knob bedknife-to-reel adjustment system incorporated in this cutting unit simplifies the adjustment procedure needed to deliver optimum mowing performance. The precise adjustment possible with the dual knob/bedbar design gives the necessary control to provide a continual self-sharpening action-thus maintaining sharp cutting edges, ensuring good quality-of-cut, and greatly reducing the need for routine backlapping.

Daily Adjustments of Cutting Unit

Prior to mowing each day, or as required, each cutting unit must be checked to verify proper bedknife-to-reel contact. This must be performed even though quality of cut is acceptable.

1. Lower the cutting units onto a hard surface, shut off the engine, and remove the ignition key.
2. Slowly rotate the reel in a reverse direction, listening for reel-to-bedknife contact. If no contact is evident, turn the bedknife adjusting knobs clockwise, one click at a time, until light contact is felt and heard.

   Note: The adjustment knobs have detents corresponding to 0.0007 in. (0.018 mm) bedknife movement for each indexed position.
3. If excessive contact is felt, turn the bedknife adjusting knobs counterclockwise, one click at a time until no contact is evident. Then turn the bedknife adjusting knobs one click at a time clockwise, until light contact

   Important: Light contact is preferred at all times. If light contact is not maintained, the bedknife/reel edges will not sufficiently self-sharpen and dull cutting edges will result after a period of operation. If excessive contact is maintained, bedknife/reel wear will be accelerated, uneven wear can result, and quality of cut may be adversely affected.

   Note: As the reel blades continue to run against the bedknife, a slight burr will appear on the front cutting edge surface along the full length of the bedknife. If a file is occasionally run across the front edge to remove this burr, improved cutting can be obtained.

   After extended running, a ridge will eventually develop at both ends of the bedknife. These notches must be rounded off or filed flush with the cutting edge of the bedknife to ensure smooth operation

Maintenance

Note: Determine the left and right sides of the machine from the normal operating position.

Servicing the Bedbar

Removing the Bedbar

1. Turn bedbar adjuster screw, counterclockwise, to back bedknife away from reel (Figure 18).

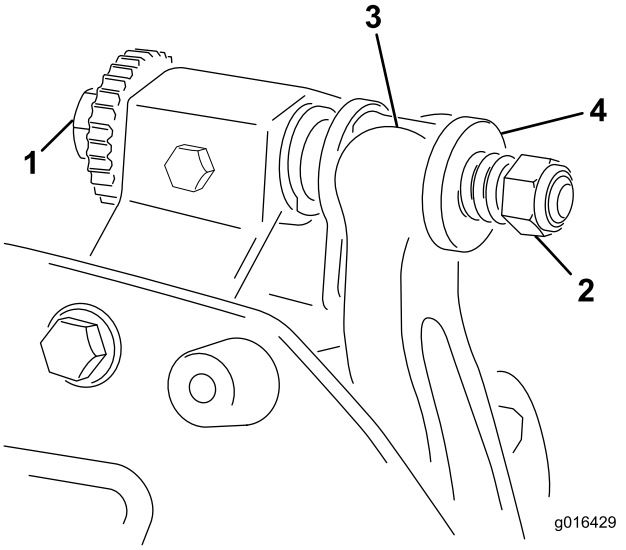

Figure 18

1. Bedbar adjusting screw
2. Spring tension nut
3. Bedbar
4. Washer

2. Back out the spring tension nut, until the washer is no longer tensioned against the bedbar (Figure 18).
3. On each side of the machine, loosen the lock nut securing the bedbar bolt (Figure 19).

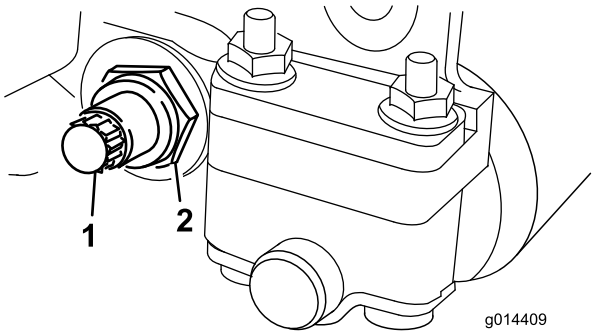

Figure 19

1. Bedbar bolt
2. Lock nut

4. Remove each bedbar bolt allowing the bedbar to be pulled downward and removed from the machine bolt (Figure 19). Account for the two nylon and one stamped steel washers on each end of the bedbar (Figure 20).

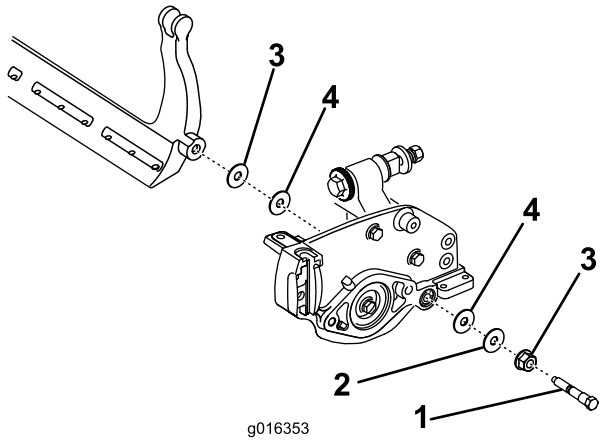

Figure 20

1. Bedbar bolt
2. Nut
3. Steel washer
4. Nylon washer

Assembling the Bedbar

1. Install the bedbar, positioning the mounting ears between the washer and bedbar adjuster.
2. Secure the bedbar to each side plate with the bedbar bolts (nuts on bolts) and 6 washers. A nylon washer is to be positioned on each side of the side plate boss. Place a steel washer outside each of the nylon washers (Figure 20). Torque the bedbar bolts to 240-320 in-lb (27-36 N-m). Tighten the locknuts until the outside steel washer stops rotating and the end play is removed but do not overtighten or deflect the side plates. The washers on the inside may have a gap.
3. Tighten the spring tension nut until the spring is collapsed, then back it off 1/2 turn (Figure 21).

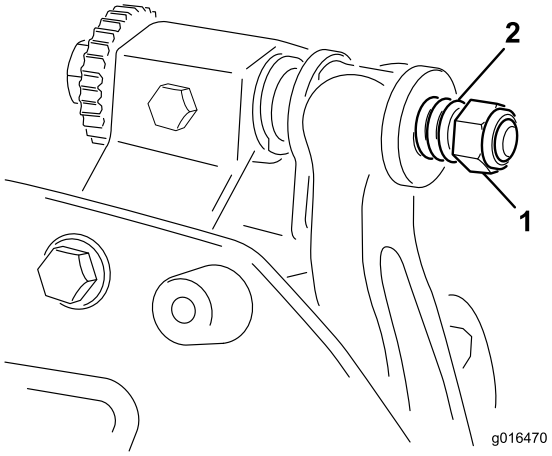

Figure 21

1. Spring tension nut
2. Spring

Backlapping the Reel

⚠ DANGER

Contact with the reel or other moving parts can result in personal injury.

Keep fingers, hands, and clothing away from the reels or other moving parts.

- **Stay away from the reel while backlapping.**
- **Never use a short handled paint brush for backlapping. Part No. 29-9100 Handle assembly complete or individual parts are available from your local Authorized Toro Distributor.**

1. Position the machine on a clean, level surface, lower the cutting units, stop the engine, engage the parking brake, and remove the ignition key.
2. Remove the reel motors from the cutting units and disconnect and remove the cutting units from the lift arms.
3. Connect the backlapping machine to the cutting unit by inserting a piece of 3/8 in. square stock into the splined coupling in the end of the cutting unit.

   Note: Additional instructions and procedures on Backlapping are available in the Toro Sharpening Reel and Rotary Mowers Manual, Form No. 80-300PT.

   Note: For a better cutting edge, run a file across the front face of the bedknife when the lapping operation is completed. This will remove any burrs or rough edges that may have built up on the cutting edge.

Notes:

The Toro Total Coverage Guarantee

A Limited Warranty

Conditions and Products Covered

The Toro® Company and its affiliate, Toro Warranty Company, pursuant to an agreement between them, jointly warrant your Toro Commercial product ("Product") to be free from defects in materials or workmanship for two years or 1500 operational hours*, whichever occurs first. This warranty is applicable to all products with the exception of Aerators (refer to separate warranty statements for these products). Where a warrantable condition exists, we will repair the Product at no cost to you including diagnostics, labor, parts, and transportation. This warranty begins on the date the Product is delivered to the original retail purchaser.
* Product equipped with an hour meter.

Instructions for Obtaining Warranty Service

You are responsible for notifying the Commercial Products Distributor or Authorized Commercial Products Dealer from whom you purchased the Product as soon as you believe a warrantable condition exists. If you need help locating a Commercial Products Distributor or Authorized Dealer, or if you have questions regarding your warranty rights or responsibilities, you may contact us at:

Commercial Products Service Department
Toro Warranty Company
8111 Lyndale Avenue South
Bloomington, MN 55420-1196
E-mail: commercial.warranty@toro.com

Owner Responsibilities

As the Product owner, you are responsible for required maintenance and adjustments stated in your Operator's Manual. Failure to perform required maintenance and adjustments can be grounds for disallowing a warranty claim.

Items and Conditions Not Covered

Not all product failures or malfunctions that occur during the warranty period are defects in materials or workmanship. This warranty does not cover the following:

- Product failures which result from the use of non-Toro replacement parts, or from installation and use of add-on, or modified non-Toro branded accessories and products. A separate warranty may be provided by the manufacturer of these items.
- Product failures which result from failure to perform recommended maintenance and/or adjustments. Failure to properly maintain your Toro product per the Recommended Maintenance listed in the *Operator's Manual* can result in claims for warranty being denied.
- Product failures which result from operating the Product in an abusive, negligent or reckless manner.
- Parts subject to consumption through use unless found to be defective. Examples of parts which are consumed, or used up, during normal Product operation include, but are not limited to, brakes pads and linings, clutch linings, blades, reels, bed knives, tines, spark plugs, castor wheels, tires, filters, belts, and certain sprayer components such as diaphragms, nozzles, and check valves, etc.
- Failures caused by outside influence. Items considered to be outside influence include, but are not limited to, weather, storage practices, contamination, use of unapproved coolants, lubricants, additives, fertilizers, water, or chemicals, etc.
- Normal noise, vibration, wear and tear, and deterioration.
- Normal "wear and tear" includes, but is not limited to, damage to seats due to wear or abrasion, worn painted surfaces, scratched decals or windows, etc.

Parts

Parts scheduled for replacement as required maintenance are warranted for the period of time up to the scheduled replacement time for that part. Parts replaced under this warranty are covered for the duration of the original product warranty and become the property of Toro. Toro will make the final decision whether to repair any existing part or assembly or replace it. Toro may use remanufactured parts for warranty repairs.

Note Regarding Deep Cycle Battery Warranty:

Deep cycle batteries have a specified total number of kilowatt-hours they can deliver during their lifetime. Operating, recharging, and maintenance techniques can extend or reduce total battery life. As the batteries in this product are consumed, the amount of useful work between charging intervals will slowly decrease until the battery is completely worn out. Replacement of worn out batteries, due to normal consumption, is the responsibility of the product owner. Battery replacement may be required during the normal product warranty period at owner's expense.

Maintenance is at Owner's Expense

Engine tune-up, lubrication cleaning and polishing, replacement of Items and Conditions Not Covered filters, coolant, and completing Recommended Maintenance are some of the normal services Toro products require that are at the owner's expense.

General Conditions

Repair by an Authorized Toro Distributor or Dealer is your sole remedy under this warranty.

Neither The Toro Company nor Toro Warranty Company is liable for indirect, incidental or consequential damages in connection with the use of the Toro Products covered by this warranty, including any cost or expense of providing substitute equipment or service during reasonable periods of malfunction or non-use pending completion of repairs under this warranty. Except for the Emissions warranty referenced below, if applicable, there is no other express warranty.

All implied warranties of merchantability and fitness for use are limited to the duration of this express warranty. Some states do not allow exclusions of incidental or consequential damages, or limitations on how long an implied warranty lasts, so the above exclusions and limitations may not apply to you.

This warranty gives you specific legal rights, and you may also have other rights which vary from state to state.

Note regarding engine warranty:

The Emissions Control System on your Product may be covered by a separate warranty meeting requirements established by the U.S. Environmental Protection Agency (EPA) and/or the California Air Resources Board (CARB). The hour limitations set forth above do not apply to the Emissions Control System Warranty. Refer to the Engine Emission Control Warranty Statement printed in your *Operator's Manual* or contained in the engine manufacturer's documentation for details

Countries Other than the United States or Canada

Customers who have purchased Toro products exported from the United States or Canada should contact their Toro Distributor (Dealer) to obtain guarantee policies for your country, province, or state. If for any reason you are dissatisfied with your Distributor's service or have difficulty obtaining guarantee information, contact the Toro importer. If all other remedies fail, you may contact us at Toro Warranty Company.