Form No. 3369-697 Rev A

Power Harness Kit

Pro Sweep 5200 Turf Sweeper

Model No. 120-6108

Installation Instructions

Installation

Loose Parts

Use the chart below to verify that all parts have been shipped.

Description	Qty.	Use
Power wire harness	1	Install the power wire harness
Cable tie	2	

Installing the Power Wire Harness

1. Disconnect the battery from the vehicle.
2. Attach the power wire harness ring terminal to the ground bolt near the vehicle fuse block.
3. Plug the harness wire into the red wire on the back of the fuse block.

   Note: If the Workman vehicle does not have open fuse slot, obtain and install a Toro Accessory Fuse Block, Toro Part no. 92–2641.
4. Route the wire harness alongside the main vehicle wire harness to the rear of the vehicle (Figure 1).

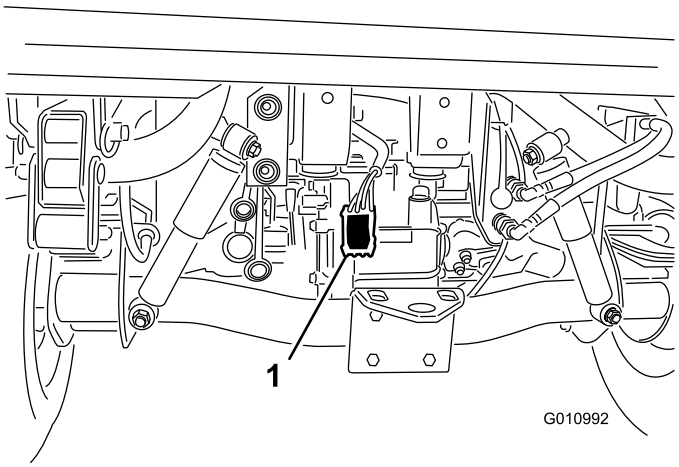

Figure 1

1. Power wire harness

5. Secure the wire harness to the vehicle in several places with wire ties. Keep the harness away from any hot or rotating components.

   Note: The harness is equipped with a connector for the optional brake control kit.
6. Reconnect the vehicle battery.

© 2011—The Toro® Company
8111 Lyndale Avenue South
Bloomington, MN 55420

Original Instructions (EN)
Printed in the USA.
All Rights Reserved