Form No. 3369-198 Rev B

e-Cycler 20-inch Cordless Lawn Mower

Model No. 20360—Serial No. 310000001 and Up

Model No. 20360—Serial No. 311000001 and Up

Operator's Manual

IMPORTANT SAFETY INSTRUCTIONS

When using an electrical appliance, basic precautions should always be followed, including the following:

WARNING

READ ALL INSTRUCTIONS BEFORE USING THIS APPLIANCE

SAVE THESE INSTRUCTIONS

To reduce the risk of fire, electric shock, or injury, follow these safety instructions.

This machine meets or exceeds CPSC blade safety requirements for walk-behind rotary mowers and the B71.1 specifications of the American National Standards Institute, in effect at time of production. However, improper use or maintenance by the operator or owner can result in injury. To reduce the potential for injury, comply with these safety instructions and always pay attention to the safety alert ⚠ symbol which means CAUTION, WARNING or DANGER — "personal safety instruction." Failure to comply with the instruction may result in personal injury. WARNING: To reduce the risk of fire, electric shock, and personal injury when using electric lawn mowers, always follow these basic safety precautions.

SAVE THESE INSTRUCTIONS

Safe Operating Practices

This product is capable of amputating hands and feet and of throwing objects. Always follow all safety instructions to avoid serious injury or death.

This mower is designed for cutting and mulching grass or, when equipped with a grass bag, for catching cut grass. Any use for purposes other than these could prove dangerous to user or bystanders.

General Operation

- Read this manual carefully before operating the mower. Become familiar with the controls and proper use of the mower. Never allow children under 16 years of age to operate the mower. Never allow adults to operate mower without proper instructions.
- The operator of the mower is responsible for keeping everyone, especially children and pets, away from area of operation. The operator is responsible for accidents or hazards occurring to other people or their property.
- Thoroughly inspect area where mower will be used and remove sticks, stones, wire, and debris that could be picked up and thrown by mower. Watch for foreign objects while mowing. Objects struck by the lawn mower blade can cause severe injuries to persons.
- Wear long pants and substantial shoes. Do not operate mower while wearing open-toed shoes, jewelry, loose clothing or when barefoot. Use of rubber gloves and footwear is recommended when working outdoors.
- Keep all guards, shields, safety devices, grass catcher or optional side discharge chute in place. Repair or replace damaged parts, including decals. Never tamper with safety devices. Check their proper operation regularly.
- The motor and blade are designed to stop within 3 seconds after releasing the control bail. Ensure that the control bail functions properly before each use of mower. If the blade does not stop within 3 seconds, or if there is a grinding or scraping metal-to-metal noise when the control bail is released, contact an Authorized Toro Service Dealer for proper "On/Off" and blade brake adjustment or replacement.
- Before using, always visually inspect to see that the blades, blade fasteners and cutter assembly are not worn or damaged. Replace worn or damaged blades and fasteners in sets to preserve balance.
- Only use those accessories and attachments designed to be used with this product. Use of any accessory or attachment not designed for this product may increase the risk of injury. See instructions for proper operation and installation of accessories.

While Operating

- Do not insert key into plug receptacle until you are ready to mow.
- Do not operate mower in gaseous, explosive atmospheres. Normal sparking of motor could ignite fumes.
- Start the motor carefully according to instructions and with feet well away from the blade.
- Use Right Appliance – Do not use mower for any job except that for which it is intended.
- Stay Alert – Watch what you are doing. Do not operate mower when tired or under the influence of drugs, alcohol or medication.
- Be alert and turn mower off if children enter the area.
- Use extra care when approaching blind corners, shrubs, trees, or other objects that may obscure vision.
- Do not mow near drop-offs, ditches, or embankments. The operator could lose footing or balance.
- Avoid dangerous environments. Never operate mower in wet grass or damp locations. Do not use mower in the rain.
- Always maintain secure footing. Keep a firm grip on the handle and walk; never run. Mow only in daylight or in good artificial light.
- Mow across the face of slopes; never up and down. Use extreme caution when changing direction on slopes. Do not mow excessively steep slopes. Wear skid resistant shoes on slopes.
- Don't Overreach – Keep proper footing and balance at all times.
- Do not force the mower. It operates best and safest at the rate for which it was designed.

© 2011—The Toro® Company
8111 Lyndale Avenue South
Bloomington, MN 55420

Register at www.Toro.com.

Original Instructions (EN)
Printed in the USA
All Rights Reserved

- Always wear safety glasses or eye shields during operation to protect eyes from foreign objects that maybe thrown from the machine. (Regular eyeglasses are not safety glasses.)
- Always wear an approved dust mask when using unit in dusty conditions.
- Keep face, hands, and feet away from the mower housing and cutter blade when the motor is running. Blade can cause injury to hands and feet. Stay behind the handle until the motor stops.
- Never direct discharged material toward anyone. Avoid discharging material against a wall or obstruction. Material may ricochet back toward the operator. Stop the blade when crossing gravel surfaces.
- Use extreme caution when reversing or pulling the mower toward you. Before and while moving backwards, look behind and down.
- Since the blade rotates for a few seconds after the control bar is released, stay behind the handle until all moving parts stop.
- After striking a foreign object or if mower vibrates abnormally, stop the motor and remove the key from the plug. Check mower for damage and make all repairs before using mower again. If major repairs are ever needed or if assistance is desired, contact an Authorized Toro Service Dealer.
- Do not operate mower if it has been dropped or damaged in any way. Repair any damage before operating mower.
- Stop the motor, wait for all moving parts to stop, and remove the key from the plug before adjusting the height-of-cut.
- Stop the motor when pushing the mower outside the lawn area.
- Stop the motor and remove the key from the plug before removing the grass catcher.
- Stop motor before leaving the operator's position—behind the handle. Remove the key from the plug if mower will be unattended.
- If mower must be lifted to be transported, stop motor, stay behind the handle until all moving parts stop and remove key from the plug receptacle.

Maintenance and Storage

- Perform only those maintenance instructions described in this manual. If major repairs are ever needed or if assistance is desired, contact an Authorized Toro Service Dealer.
- Before mower is cleaned, inspected, serviced, or adjusted, stop motor and wait for all moving parts to stop. Remove key from plug.
- Do not charge lawn mower in rain or in wet locations.
- To prevent electric shock while charging, repair or replace any damaged electrical cords immediately.

  Note: The battery charger is only needed to recharge the battery. It is not used for mowing with the mower.
- Don't abuse the cord while charging. Do not yank cord to remove it from plug receptacle. Keep cord away from heat, oil and sharp edges.
- Remove key before servicing, cleaning, or removing material from the lawn mower.
- Do not dispose of the battery(ies) in a fire; the cell may explode. Check with local codes for special disposal instructions.
- Do not open or mutilate the battery(ies). Released electrolyte is corrosive and may cause damage to the eyes or skin. It may be toxic if swallowed.
- Exercise care in handling batteries in order not to short the battery (contact both positive and negative battery posts) with conducting materials such as rings, bracelets, and keys. The battery or conductor may overheat and cause burns.
- To ensure the mower is in safe operating condition, frequently check and keep all nuts, bolts, and screws tight. Ensure blade bolt is tightened to 40 to 50 ft–lb (54 to 68 N-m).
- Always keep a sharp blade on your mower. When servicing blade, refer to blade maintenance section for correct installation and servicing procedures. Use identical replacement blades only.
- To reduce fire hazard, keep motor free of excessive grass, leaves, and accumulations of dirt.
- Check the grass catcher bag frequently for wear or deterioration. Replace a worn or damaged bag with an identical Toro replacement bag only for your protection.
- When not in use, remove key and store mower indoors in a dry, locked-up place out of the reach of children. Allow motor to cool before storing in an enclosure.
- At the time of manufacture, the mower conformed to the safety standards in effect for rotary mowers. To assure best performance and continued safety certification of the mower, use genuine Toro replacement parts and accessories. Replacement parts and accessories made by other manufacturers may result in non–conformance with the safety standards, and that could be dangerous.

SAVE THESE INSTRUCTIONS

Safety and Instructional Decals

NOTICE! **Safety and instruction decals are located near areas of potential danger. Replace damaged or lost decals.**

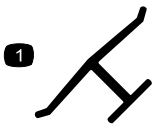

Manufacturer's Mark

1. Indicates the blade is identified as a part from the original machine manufacturer.

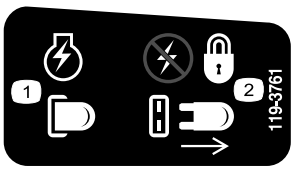

119-3761

1. Key in–engine energized
2. Key out—no power, locked



119-3760

1. Move the control lever away from the starter.
2. Hold the control lever to the handle to engage the blades.



119-3812

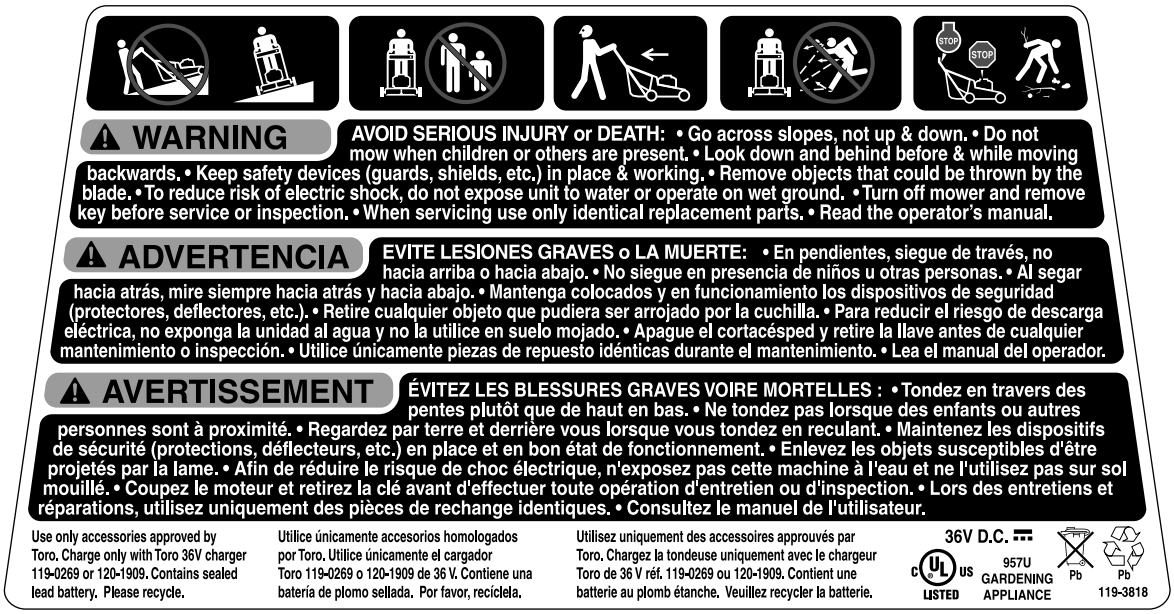

119-3818



119-7023

Setup

Note: Determine the left and right sides of the mower by standing in the operating position.

***NOTICE!* Do not insert the key into the plug receptacle until you have assembled the mower.**

1

Unfolding the Handle

No Parts Required

⚠ CAUTION

Folding or unfolding the handle improperly can damage the cables, causing an unsafe operating condition.

- **Do not damage the cables when folding or unfolding the handle.**
- **If a cable is damaged, contact an Authorized Service Dealer.**

1. Loosen the handle knobs (Figure 1).

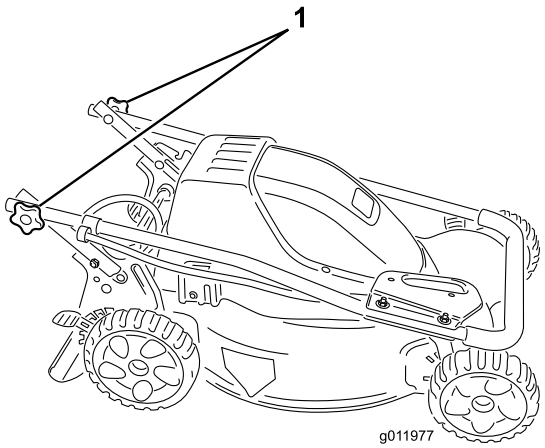

Figure 1

1. Handle knob (2)

2. Move the handle to the operating position (Figure 2).

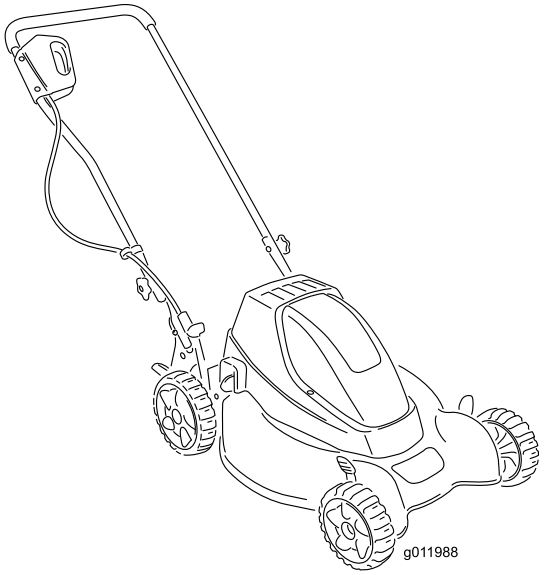

Figure 2

3. Tighten the handle knobs firmly by hand.

2

Charging the Battery

No Parts Required

⚠ WARNING

Contact with water while charging the battery or operating the mower can cause an electric shock, leading to personal injury or death.

Do not handle the charger plug or the mower with wet hands or while standing in water.

***NOTICE!* For best performance, use only a Toro 36-volt charger (part no. 119-0269 or 120-1909).**

It takes approximately 12 to 16 hours to charge a fully discharged battery. Fully charge the battery before the first mowing of the season, after every use, and before off-season storage. Failing to charge the battery after every use shortens the battery life. Charge the battery even if you run the mower for only a few minutes.

Note: The battery is charged at the factory. However, before using the mower for the first time, charge the battery and ensure that it has a full charge before operating.

To charge the battery, do the following:

***NOTICE!* Always charge the battery in a dry area protected from the weather. Also, keep the mower away from water and flammable substances.**

1. If the key is in the plug receptacle, remove it (Figure 3).

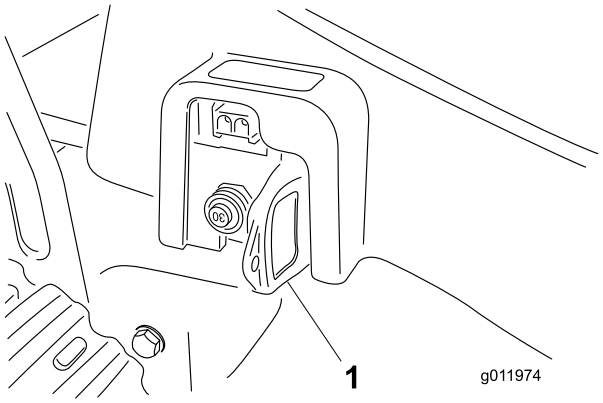

Figure 3

1. Key (remove it before charging the battery)

⚠ WARNING

The battery charger cord can be damaged and could cause a shock or fire.

Thoroughly inspect the battery charger cord before charging the unit. If the cord is damaged, do not charge the battery. Replace or repair a damaged cord immediately. Contact an Authorized Service Dealer for assistance.

2. Insert the charger cord into the charging plug receptacle (Figure 4), and connect the other end to a standard 120-volt household outlet.

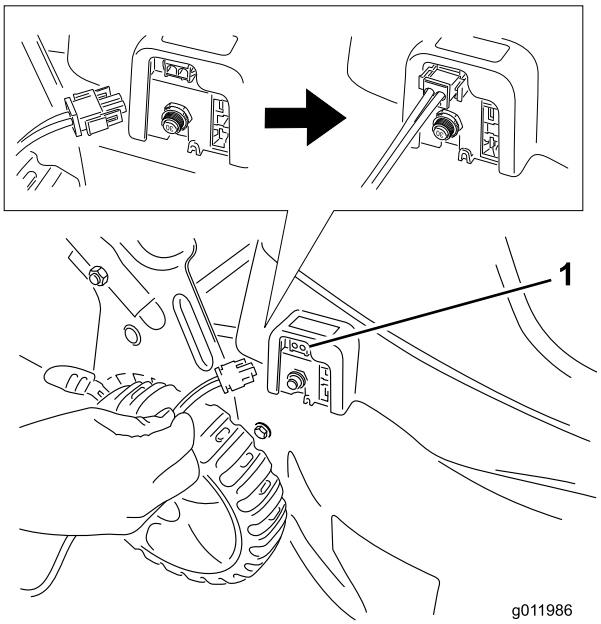

Figure 4

1. Charging plug receptacle

Note: Your battery charger has a two-color LED display that indicates the following states of charging:

—A red light indicates that the charger is charging the battery.

—A green light indicates that the battery is fully charged; the charger is trickle-charging the battery to maintain the battery charge.

3. Charge the battery for at least 16 hours.
4. Unplug the charger cord from the standard outlet and the charging plug receptacle on the mower.

Note: Do not unplug the charger cord by pulling on it. To unplug the cord, grasp the plug, not the cord.

NOTICE! **This mower has a battery charger that checks the charge state of the battery and charges the battery only when necessary. Toro recommends that you unplug the charger after 24 hours of charging, though you may leave the charger plugged into the mower longer without harming the system. During the non-mowing season, you can unplug and store the mower for up to three months if the battery is fully charged and the mower is stored in a cold, dry place.**

Operation

Each time before you use the mower, ensure that the control bar operates properly. When you release the control bar, the motor and the blade should stop. If they do not, contact an Authorized Service Dealer.

Using the Key

The mower only operates when the key is fully seated in the plug receptacle (Figure 5). To prevent accidental starting or unauthorized use of the mower, always remove the key from the plug receptacle whenever you leave the mower unattended. Store the key out of the reach of children.

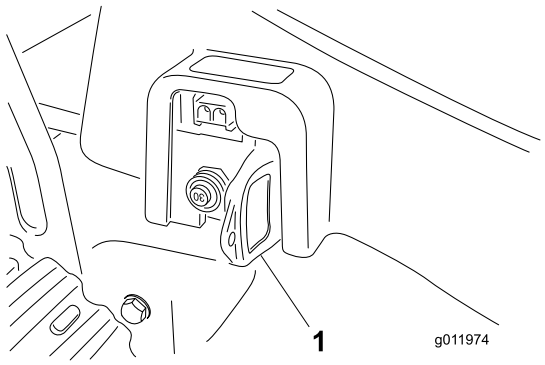

Figure 5

1. Key

Starting the Mower

1. Push the mower onto a flat concrete or asphalt surface.

   Note: Starting the mower in thick grass could cause the mower to clog.

2. Insert the key fully into the plug receptacle (Figure 5).
3. Insert a couple of fingers into the opening of the starter and push the control lever toward the handle (Figure 6).

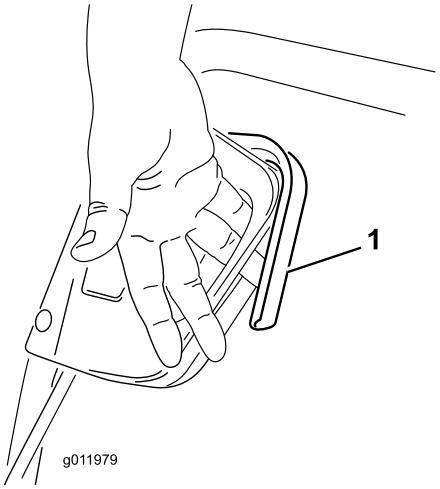

Figure 6

1. Control lever

4. Squeeze the control lever to the handle.

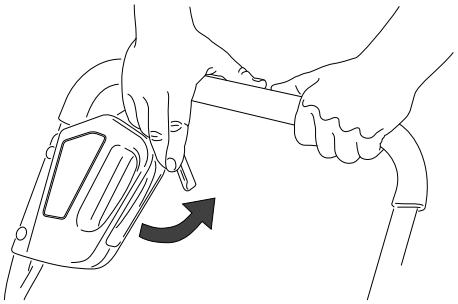

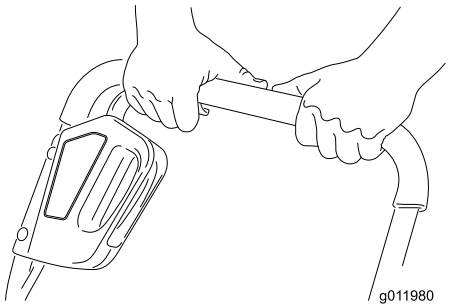

Figure 7

Note: Keep the mower running when turning the mower. Turning the mower off when making a turn does not save battery energy.

Stopping the Mower

1. Release the control lever.

⚠ WARNING

When the key is in the plug receptacle, the mower is operational. Someone could accidentally start the mower and seriously injure you or other bystanders.

Always remove the key from the plug receptacle when leaving the mower unattended, even for a short period of time.

2. Remove the key from the plug receptacle if the mower will be unattended for any period of time. Store the key in a place out of the reach of children.
3. Charge the battery.

   NOTICE! **Always charge the battery immediately after using the mower. If you do not charge the battery after each use, you will shorten the battery life. See Charging the Battery.**

Adjusting the Cutting Height

⚠ WARNING

Adjusting the cutting height may bring you into contact with the moving blade, causing serious injury.

- **Stop the engine and wait for all moving parts to stop.**
- **Do not put your fingers under the housing when adjusting the cutting height.**

Adjust the cutting height as desired. Set all four wheels to the same height (Figure 8).

Note: Move the cutting height levers forward to raise the mower; move the cutting height levers rearward to lower the mower.

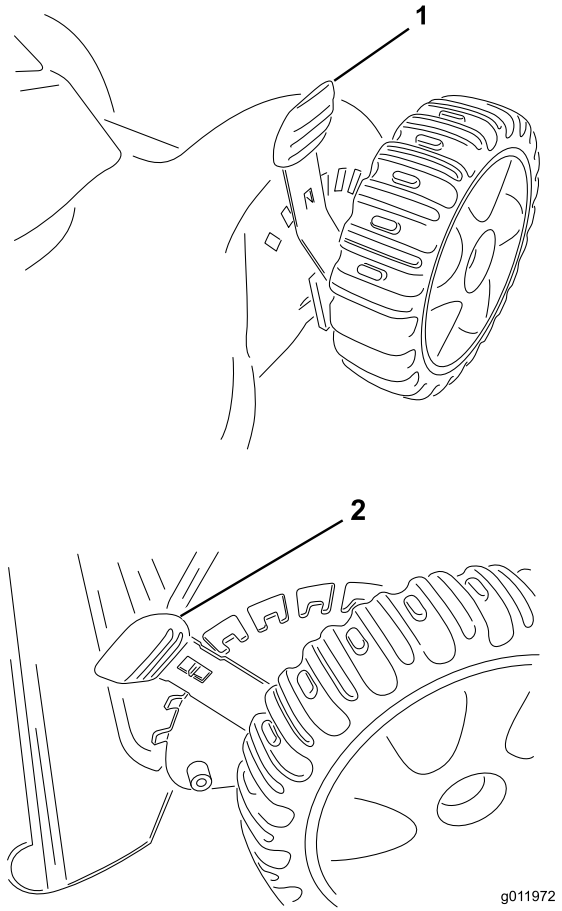

Figure 8

1. Front cutting height lever (2) 2. Rear cutting height lever (2)

Note: The cutting height settings are 1 inch (25 mm); 1-1/2 inch (38 mm); 2 inches (51 mm); 2-1/2 inches (64 mm); 3 inches (76 mm); 3-1/2 inches (89 mm); and 4 inches (102 mm).

Bagging the Clippings

Use the grass bag when you want to collect grass and leaf clippings from the lawn.

⚠ WARNING

A worn grass bag could allow small stones and other similar debris to be thrown in the operator's or bystander's direction and result in serious personal injury or death to the operator or bystanders.

Check the grass bag frequently. If it is damaged, replace it with an identical Toro replacement bag only.

Installing the Grass Bag

1. Lift up the rear deflector (Figure 9).

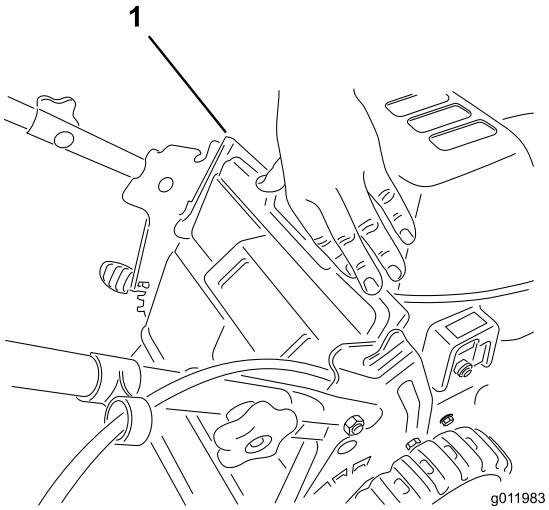

Figure 9

1. Rear deflector

2. Inset the grass bag handle onto the notches on the handle brackets (Figure 10).

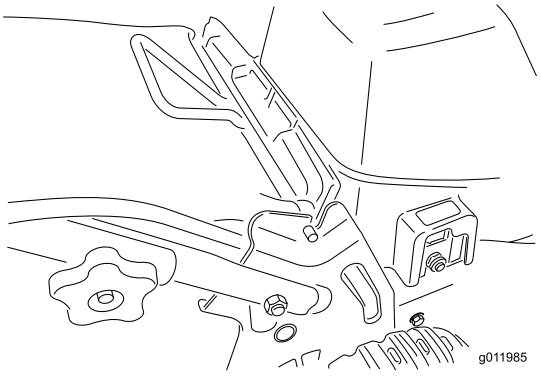

Figure 10

Removing the Grass Bag

1. Lift up the rear deflector.
2. Lift the grass bag handle out from the notches on the handle brackets and remove the bag from the mower.
3. Close the rear deflector.

Resetting the Circuit Breaker

If the mower is run under too much load, the circuit breaker will trip. Follow these instructions to reset the circuit breaker.

***NOTICE!* Never reset the circuit breaker when the key is in the receptacle and the control lever is squeezed to the handle.**

1. Remove the key from the plug receptacle (Figure 3).
2. Wait 30 seconds, then push in the circuit breaker button (Figure 11).

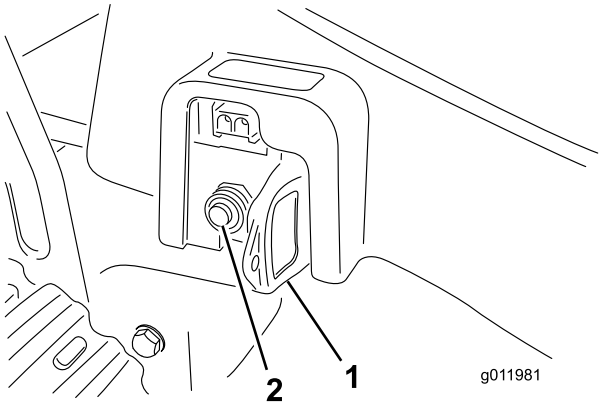

Figure 11

1. Key (remove before resetting the circuit breaker)
2. Circuit breaker

3. Install the key in the plug receptacle.
4. Resume cutting under a lighter load.

   Note: If the circuit breaker repeatedly trips, raise the cutting height or use the grass bag or optional side discharge chute.

Operating Tips

Battery Run Time

With a battery-powered mower, the condition of the grass and the way that you mow will affect how long the battery will run on a single charge at each mowing.

The following are some things that will affect battery run time:

- **Moisture content of the grass**—The more moisture there is in the grass, the faster the battery will run down.
- **Walking/mowing speed**—The faster you walk, the faster the battery will run down.
- **Mode of operation**—Mulching the grass requires the most battery energy. Bagging requires the second highest amount of battery energy, and side discharging uses the least.
- **Cutting height**—If the battery is running down too fast, raise the cutting height one notch.

General Mulching Tips

Toro designed your mower to mulch grass when the mulch door is completely closed. For the best cutting results and lawn appearance, follow these instructions whether cutting grass or leaves:

- Maintain a **sharp blade** throughout the cutting season. Periodically file down any nicks on the blade.
- Only mow dry grass or leaves. Wet grass and leaves tend to clump on the yard and may cause the mower to plug up or the motor to stall.

⚠ WARNING

Wet grass or leaves can cause you to slip and contract the blade, causing a serious personal injury.

Mow only in dry conditions.

- Remove the key from the receptacle and clean the clippings or leaves from the underside of the mower deck after each mowing. Use a wooden tool, not a metal one.
- Grass grows at different rates at different times of the year. In the heat of summer, it is generally best to cut grass at the 2-1/2 inch (6.4 cm), 3-inch (7.6 cm) or 3-1/2 inch (8.9 cm) cutting height settings. Cut only about a third of the grass blade. Do not cut below the 2-1/2 inch (6.4 cm) setting unless the grass is sparse, or it is late fall when grass growth begins to slow down.
- When changing the cutting height from an established setting to a higher cutting height, the grass may appear ragged or uneven until the grass adjusts to the new established cutting height and regains its normal appearance.
- When cutting grass over six inches (15 cm) tall, you may want to first mow using the grass bag or the optional side discharge chute, or try the highest cutting height setting and a slower walking speed; then mow again at a lower setting for the best lawn appearance. If the grass is too long, leaving clumps on top of the lawn, the mower may plug and cause the motor to stall.
- Alternate the mowing direction. this helps to disperse the clippings over the lawn for even fertilization.

If the finished cut lawn appearance is unsatisfactory, try one or more of the following:

- Sharpen the blade.
- Walk at a slower pace while mowing.
- Raise the cutting height on your mower.
- Cut the grass more frequently.
- Overlap cutting swaths instead of cutting a full swath with each pass.
- Set the cutting height on the front wheels one notch lower than that of the rear wheels. For example, set the front wheels at the 2-1/2 inch (7.6 cm) setting and the rear wheels at the 3-inch (6.4 cm) setting.

Cutting Leaves

- When cutting is complete, always be sure that half of the lawn shows through the cut leaf cover. This may require one or more passes over the leaves.
- For light leaf coverage, position all the wheels at the same cutting height setting.
- Walk at a slower mowing speed if the leaves are not cut up finely enough to be hidden down in the grass.
- If you cut up a lot of oak leaves, add lime to your grass in the spring. Lime reduces the acidity of the oak leaves.

Maintenance

⚠ WARNING

When the key is in the plug receptacle, the mower is operational. Someone could accidentally start the mower, causing serious injury to you or to bystanders.

Remove the key from the plug receptacle when you leave the mower unattended, even for a short period of time.

Cleaning the Mower Housing

Before cleaning the mower, stop the motor, wait for all moving parts to stop, and remove the key from the plug receptacle.

***NOTICE!* Do not spray or pour water on the mower when cleaning. Moisture can get trapped in the mower and cause corrosion of internal parts.**

Cleaning after Each Use

- Clean the underside of the mower housing. Be particularly careful to keep the front cavity clear of all grass clippings and debris. Remove dirt and grass clippings with a hardwood scraper. Avoid burrs and sharp edges.
- Brush all grass clippings and debris off the top of the mower housing after every use.

Cleaning after Each Season

- Remove the top shroud and clean out any grass clippings and debris from underneath it and around the battery with compressed air, a vacuum cleaner, or a brush.

  ***NOTICE!* Do not use metal objects to clean around the battery. If metal objects contact the positive and negative posts at the same time, this may short out the battery. The battery or the conductor may overheat and cause burns.**
- Check for any discolored or charred wires and battery and switch contacts. If any are damaged, contact an Authorized Service Dealer for repair.

Maintaining the Blade

Always mow with a sharp blade. A sharp blade cuts cleanly and without tearing or shredding the grass blades like a dull blade does.

⚠ WARNING

If the key is plugged into the plug receptacle, someone could accidentally start the mower, causing serious personal injury.

Do not attempt to inspect, remove, or replace the blade without first removing the key from the plug receptacle.

⚠ WARNING

The blade is sharp; contacting the blade can cause serious personal injury.

Always wear gloves or wrap the sharp edges of the blade with a rag.

1. Stop the motor and wait for all moving parts to stop.
2. Remove the key from the plug receptacle.
3. Tip the mower onto its side.
4. Remove the blade by turning the blade bolt counterclockwise (Figure 12).

   Note: Grasp the end of the blade using a rag or a thickly padded glove.

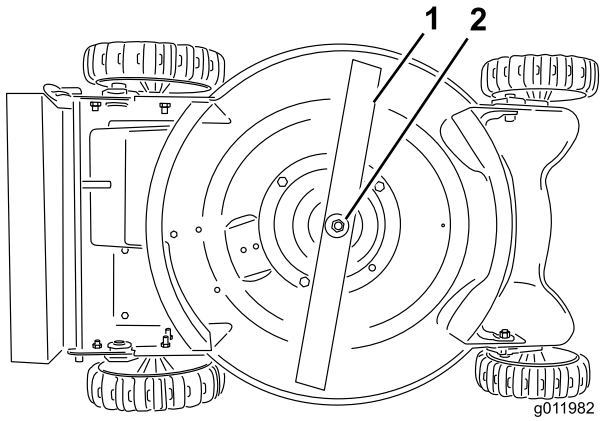

Figure 12

1. Blade
2. Blade bolt and washer

5. Remove the blade bolt, the washer, and the blade.
6. Install a sharp, balanced blade, with the washer and the blade bolt that you previously removed.
7. Tighten the blade bolt to 40 to 50 ft-lb (54 to 68 N-m).

Replacing the Battery Pack

To replace the battery pack, contact an Authorized Toro Service Center.

Disposing of the Old Battery Pack

***NOTICE!* Do not place used batteries in your household trash!**

***NOTICE!* This sealed lead (acid) battery must be collected, recycled, or disposed of in an environmental sound manner.**

Incinerating, landfilling, or mixing sealed lead (acid) batteries with the municipal solid waste stream **is prohibited by law** in some states.

Return this battery to an approved sealed lead (acid) battery recycler. This may be where you purchased the mower.

Contact your local waste management officials for other information regarding the environmentally sound collection, recycling, and disposal of this battery.

Service

Toro has designed this product to give you years of trouble-free use. Should it need service, bring the product to an Authorized Toro Service Dealer who is specially trained to repair Toro products and will ensure that your Toro stays “all” Toro.

Product Information

A model and serial number decal is located under the rear door of the mower. Always refer to specific numbers on the decal in correspondence or when you need replacement parts.

Storage

Store the mower in a cool, clean, and dry place such as an unheated garage. Do not store a battery-powered mower in a warm basement. Cover the lawn mower to keep it clean and protected.

1. Clean the mower housing. Refer to *Cleaning the Mower Housing*.
2. Remove glass clippings, dirt, and grime from external parts of the shrouding and the top of the mower housing.
3. Check the condition of the blade. Refer to *Maintaining the Blade*.
4. Tighten all loose nuts, bolts, and screws.

***NOTICE!* This mower has a battery charger that checks the charge state of the battery and charges the battery only when necessary. Toro recommends that you unplug the charger after 24 hours of charging, though you may leave the charger plugged into the mower longer without harming the system. During the non-mowing season, you can unplug and store the mower for up to three months if the battery is fully charged and the mower is stored in a cold, dry place.**

Troubleshooting

Problem	Possible Cause	Corrective Action
The motor will not start.	1. The key is not in the plug receptacle. 2. The battery charge is low. 3. The circuit breaker is tripped.	1. Insert the key in the plug receptacle. 2. Charge the battery. 3. Reset the circuit breaker.
The motor starts hard or loses power.	1. The underside of the mower housing is full of grass clippings and/or debris. 2. You are trying to start the mower in the grass.	1. Clean the underside of the mower housing. 2. Move the mower onto the pavement; do not start the mower in the grass.
The mower or the motor vibrates excessively.	1. The blade is not balanced. 2. The blade mounting nut is loose. 3. The motor mounting nuts are loose.	1. Balance the blade. 2. Tighten the blade mounting nut. 3. Tighten the motor mounting nuts.
The cutting pattern in the lawn is uneven.	1. The wheels are not set to the same height. 2. The blade is dull and unbalanced. 3. You are repeatedly mowing in the same pattern on the lawn. 4. The underside of the mower housing is full of grass clippings and/or debris.	1. Set all 4 wheels to the same height. 2. Sharpen and balance the blade. 3. Change the mowing pattern˙. 4. Clean the underside of the mower housing.
The discharge chute plugs up.	1. The cutting height is too low. 2. The grass is wet. 3. The underside of the mower housing is full of grass clippings and/or debris.	1. Raise the cutting height. 2. Allow the grass to dry before mowing the lawn. 3. Clean the underside of the mower housing.

The Toro Total Coverage Guarantee

A 2-Year Full Warranty (Not Applicable for Commercial Use)

20 in Cordless Mowers

Conditions and Products Covered

The Toro Company and its affiliate, Toro Warranty Company, pursuant to an agreement between them, jointly promise to repair the Toro Products listed below if used for residential purposes* if it is defective in materials or workmanship or if it stops functioning due to the failure of a component.

This warranty covers the cost of parts and labor, but you must pay transportation costs.

The following time periods apply from the date of purchase:

Products	Warranty Period
20 in Cordless Mowers	2 - year full warranty
Battery	2 - year full warranty

Instructions for Obtaining Warranty Service

If you think that your Toro Product contains a defect in materials or workmanship, follow this procedure:

1. Contact any Authorized Toro Service Dealer to arrange service at their dealership. To locate a dealer convenient to you, refer to the *Yellow Pages* of your telephone directory (look under “Lawn Mowers”) or access our web site at www.Toro.com. You may also call the numbers listed in item #3 to use the 24-hour Toro Dealer locator system.
2. Bring the product and your proof of purchase (sales receipt) to the Service Dealer. The dealer will diagnose the problem and determine if it is covered under warranty.
3. If for any reason you are dissatisfied with the Service Dealer’s analysis or with the assistance provided, contact us at:

   Customer Care Department, RLC Division
   The Toro Company
   8111 Lyndale Avenue South
   Bloomington, MN 55420-1196
   Toll free at 866-214-9807 (U.S. customers)
   Toll free at 866-214-9808 (Canadian customers)

Owner Responsibilities

You must maintain your Toro Product by following the maintenance procedures described in the *Operator’s Manual*. Such routine maintenance, whether performed by a dealer or by you, is at your expense.

Items and Conditions Not Covered

There is no other express warranty:

- Cost of regular maintenance service or parts, such as blade sharpening or worn blades
- Any product or part which has been altered or misused and requires replacement or repair due to accidents or lack of proper maintenance
- Pickup and delivery charges
- Operational misuse, neglect, or accidents
- Repairs or attempted repairs by anyone other than an Authorized Toro Service Dealer
- Repairs necessary due to improper battery care, electrical supply irregularities, or failure to properly prepare the mower prior to any period of non-use.

General Conditions

All repairs covered by these warranties must be performed by an Authorized Toro Service Dealer using Toro-approved replacement parts. Repair by an Authorized Toro Service Dealer is your sole remedy under this warranty.

Neither The Toro Company nor Toro Warranty Company is liable for indirect, incidental, or consequential damages in connection with the use of the Toro Products covered by these warranties, including any cost or expense of providing substitute equipment or service during reasonable periods of malfunction or non-use pending completion of repairs under these warranties.

Some states do not allow exclusions of incidental or consequential damages, so the above exclusions may not apply to you.

This warranty gives you specific legal rights, and you may also have other rights which vary from state to state.

Countries Other than the United States or Canada

Customers who have purchased Toro products exported from the United States or Canada should contact their Toro Distributor (Dealer) to obtain guarantee policies for your country, province, or state. If for any reason you are dissatisfied with your Distributor’s service or have difficulty obtaining guarantee information, contact the Toro importer. If all other remedies fail, you may contact us at Toro Warranty Company.

*Residential purposes means use of the product on the same lot as your home. Use at more than one location, or institutional or rental use, is considered commercial use, and no warranty would apply.