Form No. 3369-793 Rev A

Cable Support Kit

Greensmaster® 3300, 3320, 3400, and 3420 TriFlex™ Traction Units

Model No. 120-2018

Model No. 120-2019

Model No. 120-2020

Installation Instructions

Removing the Components from the Old Cable Support Plate

Note: Save all the components that you remove from the existing cable support plate so that you can install them on the new cable support plate.

1. Remove the damper and hardware from the existing cable support plate.
2. Remove the traction cable from the existing cable support plate.
3. Remove the neutral centering device and the spring from the existing cable support plate.

Replacing the Cable Support Plate

1. Remove the 2 bolts that secure the existing cable support plate to the hydrostat.

   Note: Do not discard the bolts; save them for installing the new cable support plate.

2. Remove and discard the existing cable support plate.
3. Install the new cable support plate to the hydrostat with the 2 bolts that you previously removed.

   Note: Apply Never Seez (Toro part 505-181) onto the pivot bushing (Figure 1 or Figure 2).

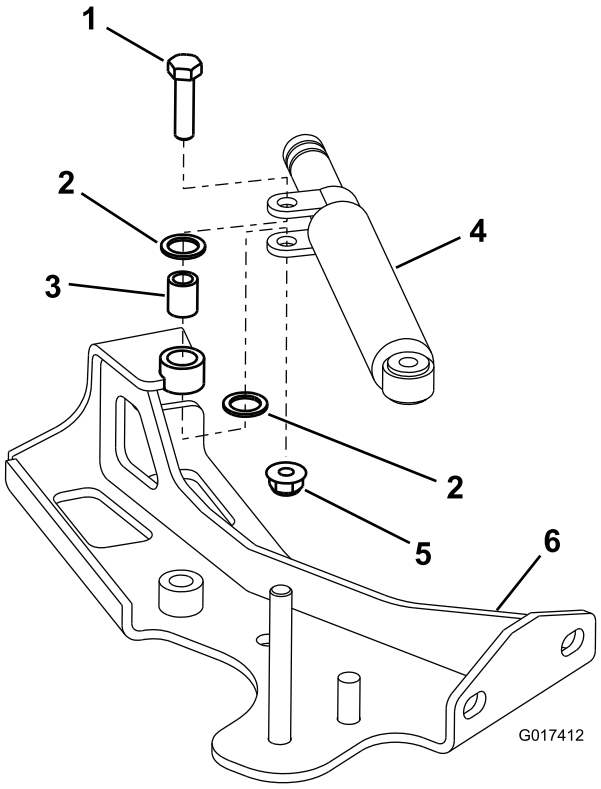

Figure 1

For Diesel Models only

1. Hex-head screw
2. Nylon washer
3. Pivot bushing
4. Damper
5. Flange nut
6. Cable support plate

© 2011—The Toro® Company
8111 Lyndale Avenue South
Bloomington, MN 55420

Register at www.Toro.com.

Original Instructions (EN)
Printed in the USA
All Rights Reserved

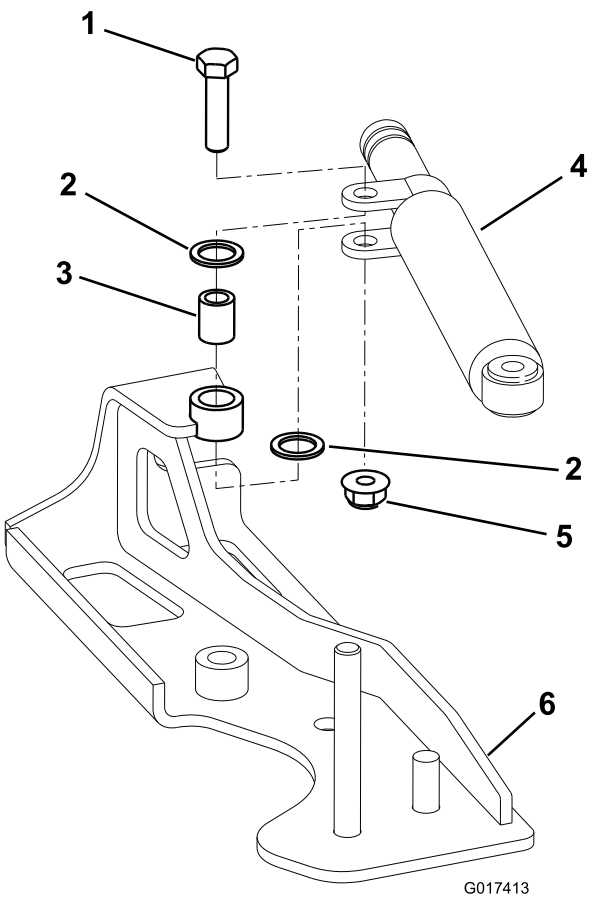

Figure 2

For Gasoline Models only

1. Hex-head screw
2. Nylon washer
3. Pivot bushing
4. Damper
5. Flange nut
6. Cable support plate

Installing the Components on the New Cable Support Plate

1. Install the traction cable to the new cable support plate.
2. Install the damper onto the new cable support plate as shown in Figure 1 or Figure 2.
3. Install the neutral centering device new cable support plate.

Setting or Calibrating the Centering Device

Install the spring to the new cable support plate, and set the spring; refer to the *Operator's Manual*.

Adjusting the Transmission for Neutral

If the machine creeps when the traction control pedal is in the neutral position, adjust the neutral return mechanism.

1. Block up under the frame so that one of the front wheels is off the floor.

   Note: If machine is equipped with a 3-wheel drive kit, also raise and block the rear wheel.

2. Start the engine, move the throttle to Slow, and ensure that the front wheel is both off the floor and not rotating.
3. If the wheel is rotating, stop the engine and proceed as follows:

   A. Loosen the nut that secures the eccentric to the top of the hydrostat (Figure 3).

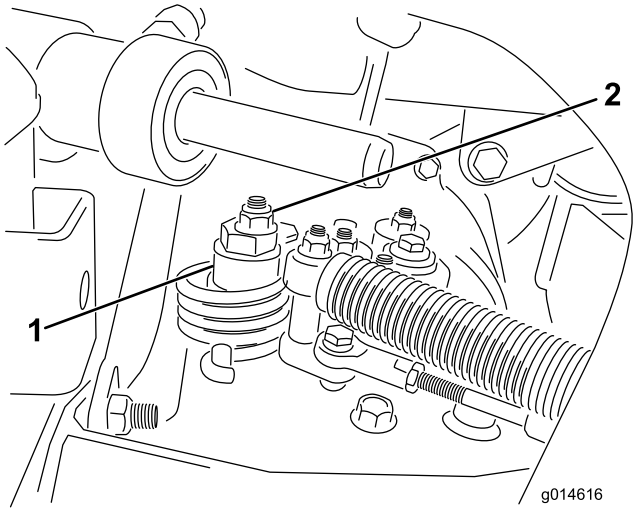

Figure 3

1. Eccentric
2. Locknut

   B. Move the functional control lever to Neutral and the throttle to Slow.

   C. Start the engine.

   D. Rotate the eccentric until there is no creep in either direction. When the wheel stops rotating, tighten the nut to lock the eccentric and the adjustment (Figure 3).

   E. Verify the adjustment with the throttle in both the Slow and Fast positions.

   Note: If the wheel still turns when the eccentric is at the maximum adjustment, contact an Authorized Service Distributor or refer to the *Service Manual* for further adjustment.