Form No. 3366-951 Rev B

# Road Light Kit

## North American Groundsmaster 360 Multi-Purpose Machine without Cab

**Model No. 30513**

**Installation Instructions**

# Installation

## Loose Parts

Use the chart below to verify that all parts have been shipped.

| Procedure | Description | Qty. | Use |
|---|---|---|---|
| 1 | No parts required | – | Initial Preparation |
| 2 | No parts required | – | Floor plate access hole |
| 3 | Column bracket assembly<br>Column bracket mount<br>Carriage screw, 3/8 inch x 1 inch<br>Flange nut, 3/8 inch<br>Column cover<br>Screw | 1<br>1<br>2<br>2<br>1<br>2 | Install the switches |
| 4 | Dual rate flasher<br>Flange head screw, #10 x 3/4 inch<br>Flange nut, #10 | 1<br>2<br>2 | Install the dual rate flasher |
| 5 | Head light assembly<br>Flange head screw, 3/8 x 1–3/4 inch<br>Flange nut, 3/8 inch | 2<br>2<br>2 | Install the head lights |
| 6 | Tail light flasher assembly, R.H.<br>Tail light flasher assembly, L.H.<br>U-bolt<br>Lock nut, 3/8 inch | 1<br>1<br>4<br>8 | Install the tail light flashers |
| 7 | Wire harness<br>Grommet<br>Cable tie, 7–1/4 inch (184 mm)<br>Cable tie, 14–1/2 inch (368 mm) | 1<br>1<br>13<br>2 | Install the wire harness |
| 8 | SMV Emblem assembly<br>Bracket strap<br>Machine screw, 1/4 x 3/4 inch<br>Flange nut, 1/4 inch | 1<br>1<br>3<br>3 | Install the SMV emblem |
| 9 | No parts required | – | Final Procedures |

## Media and Additional Parts

| Description | Qty. | Use |
|---|---|---|
| Installation instructions | 1 | Use to install kit |
| Parts catalog | 1 | Use to reference part numbers |

© 2011—The Toro® Company
8111 Lyndale Avenue South
Bloomington, MN 55420

Register at www.Toro.com.

Original Instructions (EN)
Printed in the USA.
All Rights Reserved

# 1

# Initial Preparation

## No Parts Required

## Procedure

1. Park the machine on a level surface, stop the engine, engage the parking brake and remove the key from the ignition switch.
2. Disconnect the negative (–) battery cable from the battery.

**⚠ WARNING**

**Wear safety goggles and rubber gloves when working with batteries. Since the gases are explosive, keep open flames and electrical spark away from batteries. Do not smoke.**

3. Press the steering column pedal down, pivot the steering tower forward as far as possible and then release the pedal
4. Move the seat latch, located on the left side of the seat, rearward to unlatch the seat and pull forward on the top of the seat until the seat latch catches the supporting seat plate (Figure 1).

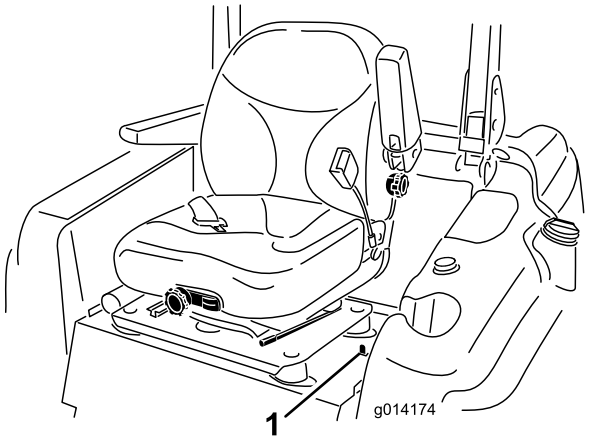


**Figure 1**

1. Seat latch

5. Raise and secure the hood as follows:
   - Release the hood latches.
   - Lift up on the hood until the prop rod can be positioned behind the frame tube (Figure 2).

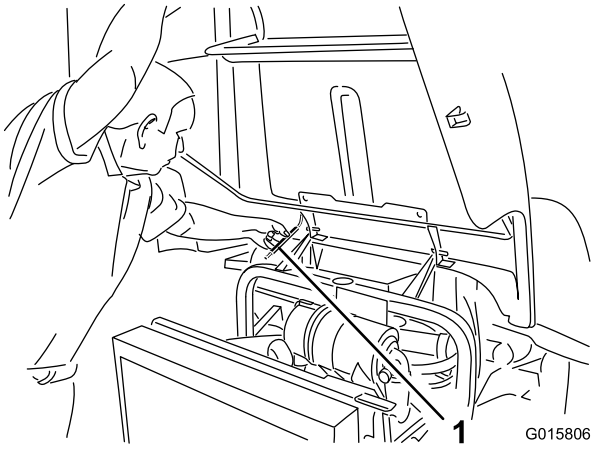


**Figure 2**

1. Prop rod

   - Lower the hood until the rod is in front of and resting against the frame tube.

# 2

# Floor Plate Access Hole

## No Parts Required

## Procedure

1. Remove the knockout plug, located between the brake pedal and the steering column in the floor plate (Figure 3). If the floor plate does not have a knock out plug, proceed to the next step for drilling instructions.

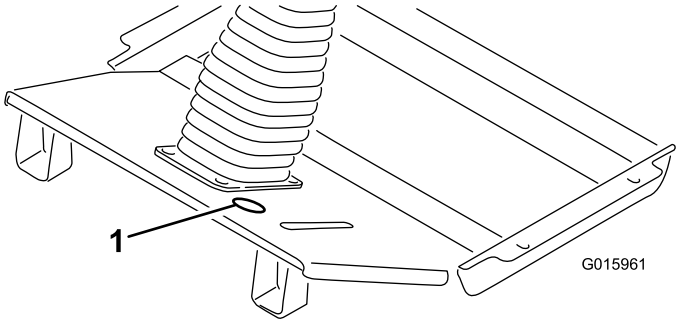


**Figure 3**

1. Knockout plug location

2. Using the dimensions shown inFigure 4, locate, mark and drill a 2 inch (51 mm) diameter hole in the floor plate.

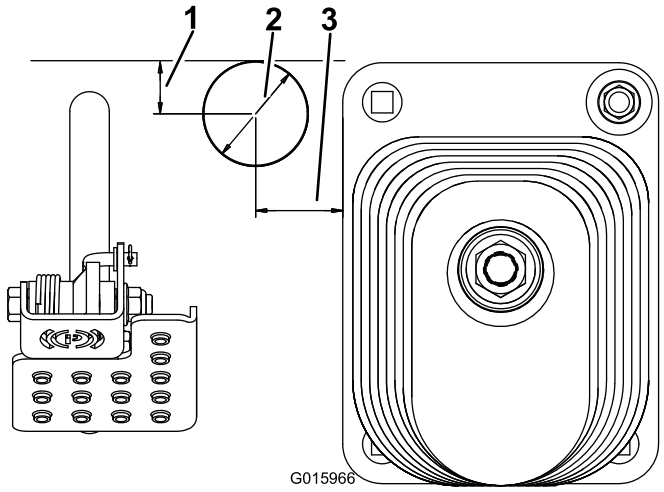


**Figure 4**

1. 1 inch (25 mm)
2. 2 inch diameter (51 mm)
3. 1–5/8 inches (41 mm)

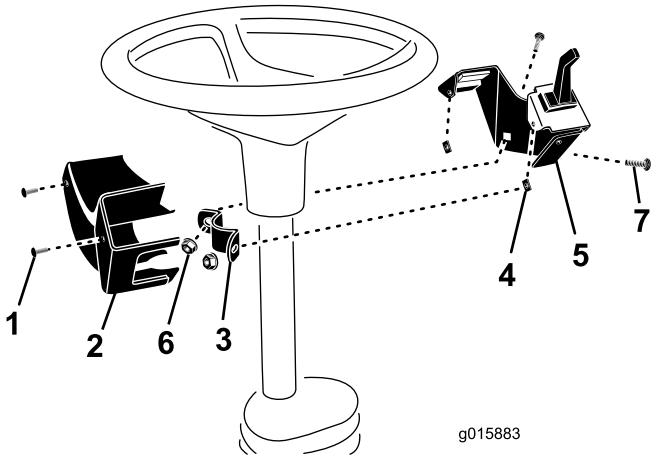


**Figure 5**

1. Screw (2)
2. Column cover
3. Column bracket mount
4. Speed nut (2)
5. Column bracket
6. Flange nut
7. Carriage screw

# 3

# Installing the Switches

## Parts needed for this procedure:

| | |
|---|---|
| 1 | Column bracket assembly |
| 1 | Column bracket mount |
| 2 | Carriage screw, 3/8 inch x 1 inch |
| 2 | Flange nut, 3/8 inch |
| 1 | Column cover |
| 2 | Screw |

## Procedure

1. Mount the column bracket assembly to the steering column with the column bracket mount, (2) 3/8 inch x 1 inch carriage screws and 3/8 inch flange nuts. Position the column bracket as high as possible on the steering column as shown in Figure 5. Make sure the column bracket does not interfere with the steering wheel.

   **Note:** Over tightening the carriage screws/flange nuts may distort the column bracket prohibiting the cover from being installed

2. After the wire harness is connected to the switches, mount the column cover to the column bracket speed nuts with two screws (Figure 5).

# 4

# Installing the Dual Rate Flasher

## Parts needed for this procedure:

| | |
|---|---|
| 1 | Dual rate flasher |
| 2 | Flange head screw, #10 x 3/4 inch |
| 2 | Flange nut, #10 |

## Procedure

1. Position the dual rate flasher under the seat plate while aligning it with the holes in the plate (Figure 6).

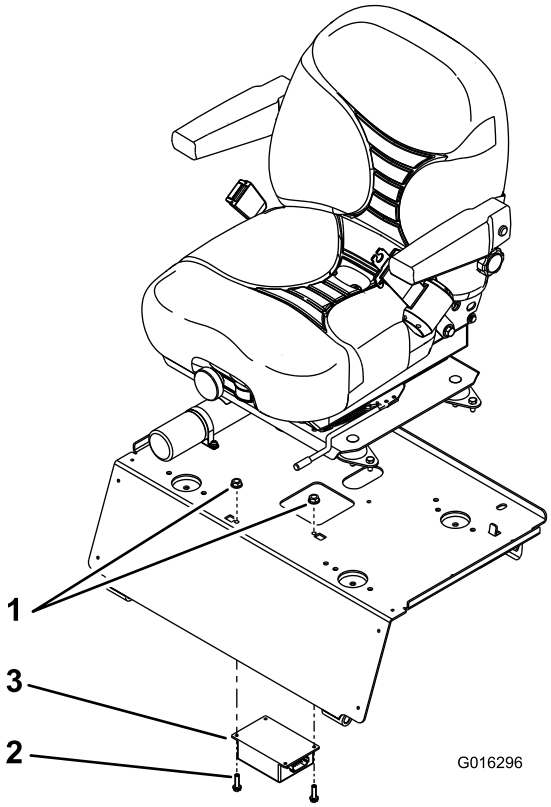


**Figure 6**

1. Flange nut
2. Flange head screw
3. Dual rate flasher

2. Secure the dual rate flasher to the seat plate with (2) #10 x 3/4 inch flange head screws and flange nuts (Figure 6).

# 5

# Installing the Head Lights

## Parts needed for this procedure:

| | |
|---|---|
| 2 | Head light assembly |
| 2 | Flange head screw, 3/8 x 1–3/4 inch |
| 2 | Flange nut, 3/8 inch |

## Procedure

Mount the headlight brackets to the platform with (2) 3/8 x 1–3/4 inch flange head screws and 3/8 inch flange nuts as shown in Figure 7.

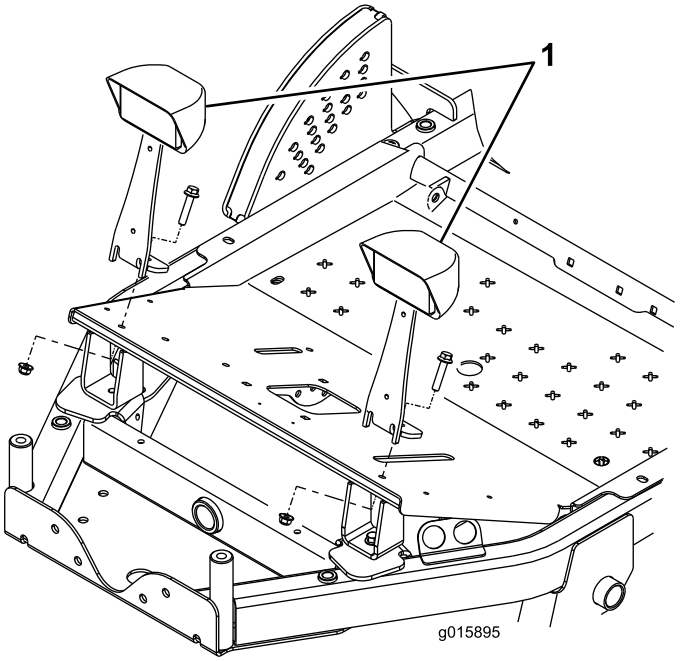


**Figure 7**

1. Headlight assemblies

# 6

# Installing the Tail Light Flashers

## Parts needed for this procedure:

| | |
|---|---|
| 1 | Tail light flasher assembly, R.H. |
| 1 | Tail light flasher assembly, L.H. |
| 4 | U-bolt |
| 8 | Lock nut, 3/8 inch |

## Procedure

Mount each of the light bracket assemblies to the inside of the ROPS with (2) U–bolts and (2) (3/8–16) locknuts, positioning as shown in Figure 8. The black lens should be toward the front of the machine. Tighten the locknuts evenly to avoid distorting the light brackets.

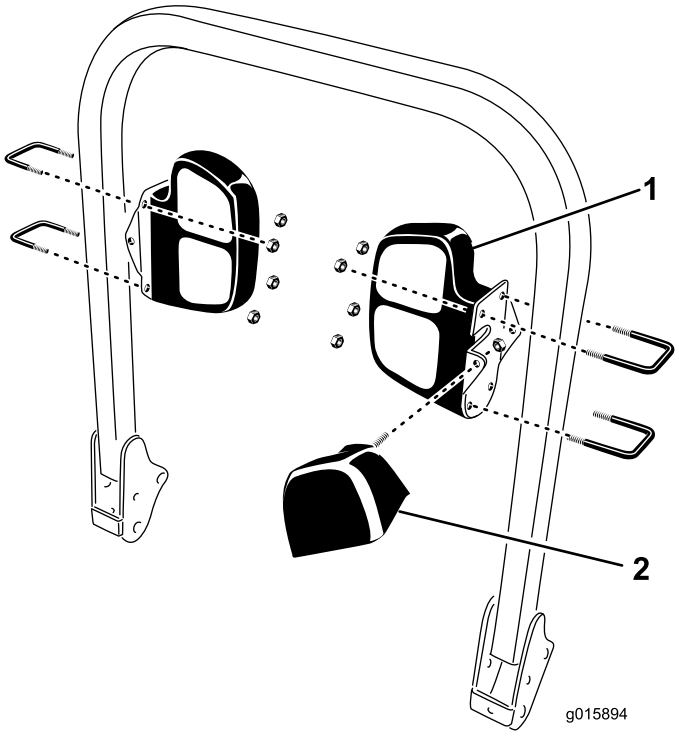


**Figure 8**

1. Tail light flasher assembly 2. Work light

**Note:** The work light can be mounted to the rear of the bracket to shine rearward, to the front of the bracket to shine forward or pointed to the side to illuminate the edge of the mower deck.

**Note:** Lights are not as protected when mounted to the side of the brackets. Watch out for tree limbs.

**Note:** Mount the lights assemblies as high as possible on the ROPS. Lights may have to be repositioned if a canopy is installed.

# 7

# Installing the Wire Harness

## Parts needed for this procedure:

| | |
|---|---|
| 1 | Wire harness |
| 1 | Grommet |
| 13 | Cable tie, 7–1/4 inch (184 mm) |
| 2 | Cable tie, 14–1/2 inch (368 mm) |

## Procedure

Route, connect and secure the wire harness as follows:

- Starting at the front of the machine and under the floor plate, route the end of the harness with the (2) connectors up through the knockout in the floor plate and up the steering column to the turn signal and head light switches Figure 9. Plug the harness connectors to the appropriate switches.

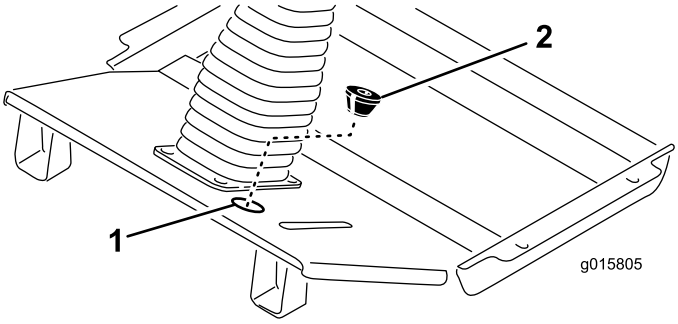


**Figure 9**

1. Knockout plug location 2. Grommet

- Cut a slit in the supplied grommet and cut out the bottom opening (Figure 9). With the cone end of the grommet facing down, wrap it around the harness and insert it into the knockout hole in the platform.
- Route the left and right head light harness connectors around the front of the platform and up the back of each head light bracket plugging the harness clips into the lower holes on the head light brackets. Plug the harness connectors to the head lights and use the supplied harness clips and cable ties to secure to the harness to the top holes in the head light brackets.

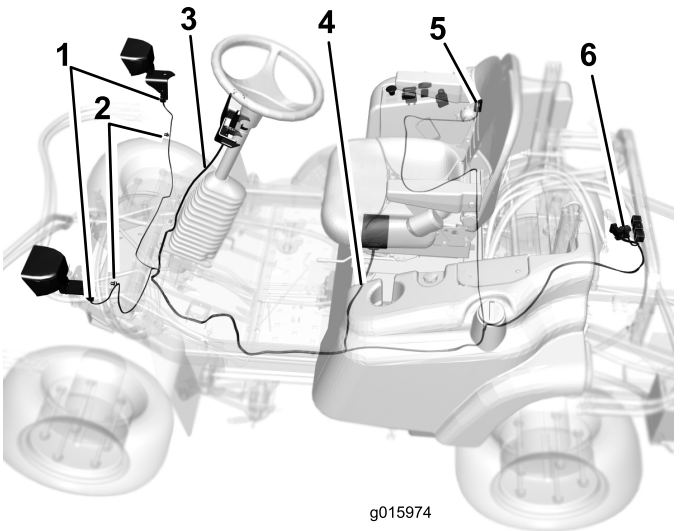


**Figure 10**

1. Head light connections
2. Harness clips
3. Switch connections
4. Dual rate flasher connection
5. Accessory wire connection
6. Rear flasher and work light connections

- Route the harness along the existing wire harness and under the platform to the dual rate flasher. Cable tie the harness to the existing harness near each harness clip. Plug the connector into the dual rate flasher
- Following the existing harness, route the harness along the underside of the seat support bracket to the control panel on the right side of the machine.
- Remove the (5) screws securing the control panel to the tank cover.
- Raise the control panel and locate the wire harness connector labeled **Accessory.**
- Route the harness connector up to the accessory connector and plug it in.
- Install the control panel to the tank cover with the screws previously removed. Torque the screws to 25 in-lbs (2.8 N-m). **Do not over tighten the screws.**
- Route the right rear flasher harness to and up the right ROPS tube through the gap between the storage compartment and the hydraulic tank cover.
- Plug the harness connectors into the right flasher. Secure the harness to the ROPS tube with cable ties.
- Route the left rear flasher harness to and up the left ROPS tube through the gap between the storage compartment and the fuel tank.
- Plug the harness connectors into the left flasher and the work light. Secure the harness to the ROPS tube with cable ties.

**Important: Make sure the harness is clear of all hot, sharp or moving components.**

# 8

# Installing the Slow Moving Vehicle (SMV) Emblem

## Parts needed for this procedure:

| | |
|---|---|
| 1 | SMV Emblem assembly |
| 1 | Bracket strap |
| 3 | Machine screw, 1/4 x 3/4 inch |
| 3 | Flange nut, 1/4 inch |

## Procedure

1. Remove the (2) screws securing the storage housing mounting bracket to the machine's frame (Figure 11).

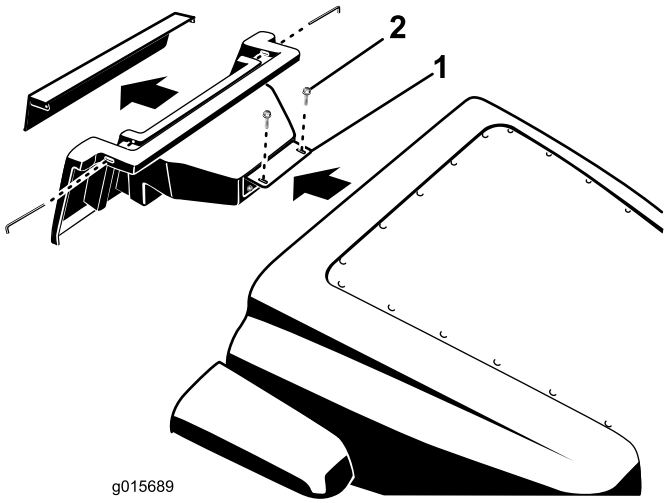


**Figure 11**

1. Storage housing mounting bracket
2. Mounting screws

2. Remove the storage housing from the machine.
3. Using the SMV emblem bracket as a template, locate, mark and drill (3) 5/16 inch diameter holes in the front of the storage housing as shown in Figure 12.

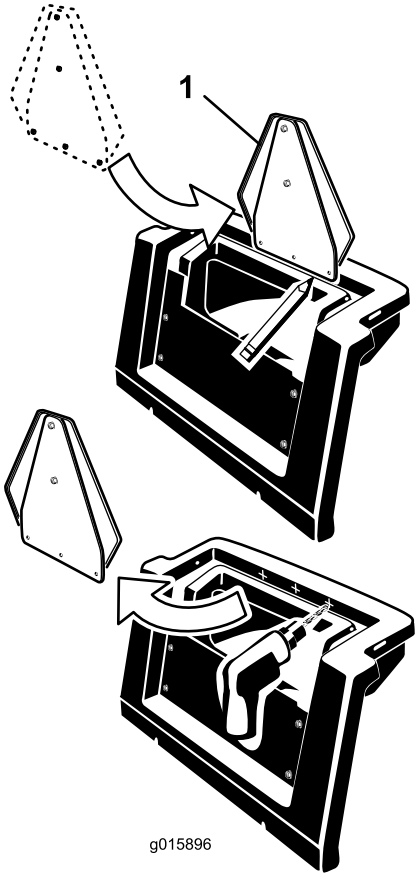


**Figure 12**

1. Emblem bracket

4. Mount the SMV emblem bracket to the storage housing with the bracket strap, (3) 1/4 x 3/4 inch machine screws and (3) 1/4 inch flange nuts (Figure 13).

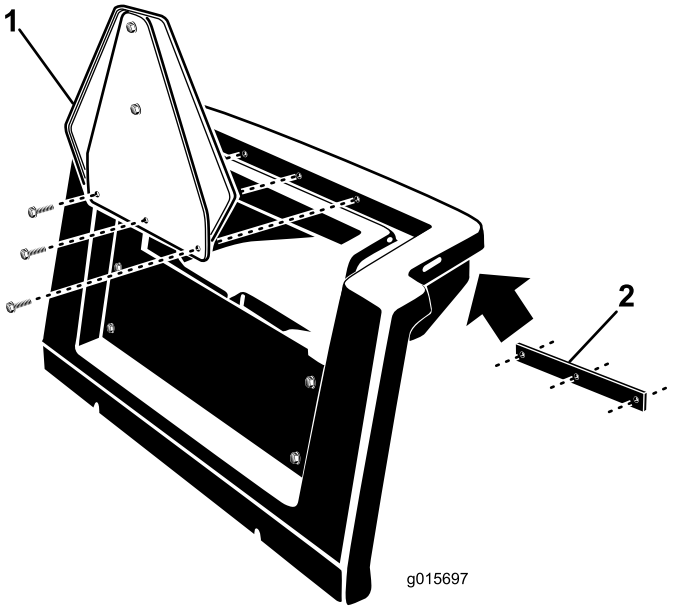


**Figure 13**

1. SMV emblem
2. Bracket strap

5. Reinstall the storage housing and secure the mounting bracket to the frame with the fasteners previously removed. Make sure the notches on the bottom edge of the storage housing are positioned over the (2) frame bolts.

# 9

# Final Procedures

## No Parts Required

## Procedure

1. Pull up on the seat latch release bar and lower the seat into the locked position.
2. Attach the negative battery cable to the battery post.
3. Raise the hood until the prop rod can be raised above the frame tube, then lower the hood. Secure the hood latches.

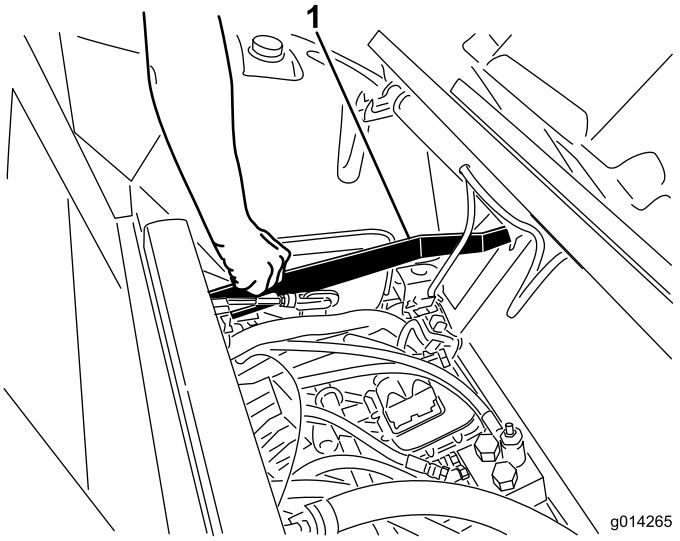


**Figure 14**

1. Seat latch release bar

# Operation

The Road Light Kit consists of 2 front mounted head lamps, 2 combination warning/turn/tail lamps and a work light mounted to the ROPS structure (roll bar).

## Light Switch

Press the front of the light switch (Figure 15) to activate the front head lights and the rear flashers.

Press the rear of the light switch (Figure 15) to activate the front head lights and the rear work light. Flashers will not activate

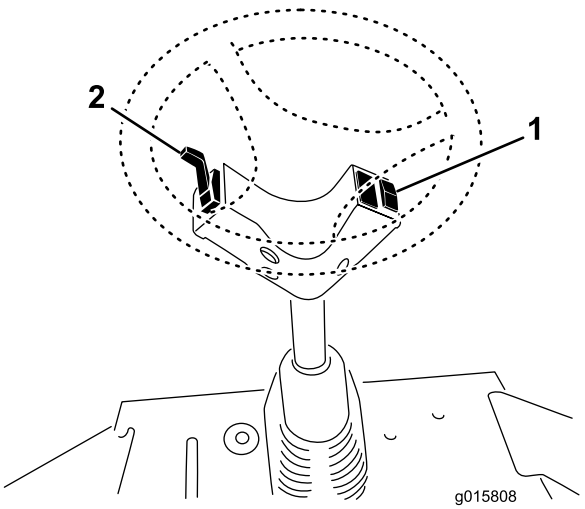


**Figure 15**

1. Light switch
2. Turn signal

## Turn Signal

Press down on the turn signal arm (Figure 15) to activate the left turn signal.

Press up on the turn signal arm (Figure 15) to activate the right turn signal.

### If turning LEFT:

The left combination warning/turn/tail lamp will illuminate as follows:

- Amber lamp will flash.
- The low intensity red tail lamp will be on steady.
- The high intensity red tail lamp will be high rate flash.

The right combination warning/turn/tail lamp will illuminate as follows:

- Amber lamp will be on steady.
- The red tail lamp will be on steady (both high and low intensity).

### If turning RIGHT:

The right combination warning/turn/tail lamp will illuminate as follows:

- Amber lamp will flash.
- The low intensity red tail lamp will be on steady.
- The high intensity red tail lamp will be high rate flash.

The left combination warning/turn/tail lamp will illuminate as follows:

- Amber lamp will be on steady.
- The red tail lamp will be on steady (both high and low intensity).

## Aiming the Headlights

1. Loosen the mounting nuts and position each headlight so that it points straight ahead. Tighten the mounting nut just enough to hold the headlight in position.
2. Place a flat piece of sheet metal over the face of the headlight.
3. Mount a magnetic protractor onto the plate. While holding the assembly in place, carefully tilt the headlight downward 3 degrees, then tighten the nut.
4. Repeat the procedure on the other headlight.