Form No. 3369-977 Rev A

Count on it.

Parts Catalog

Groundsmaster® 3280-D Traction Unit

Model No. 30344—Serial No. 311000301 and Up

Register at www.Toro.com.

Original Instructions (EN)

Ordering Replacement Parts

To order replacement parts, please supply the part number, the quantity, and the description of each part desired.

Understanding Reference Numbers

Each identified part in an illustration has a reference number. The reference number for a part also appears in the parts list, along with other information about the part.

This catalog uses two special reference number formats, one to indicate parts in a service assembly and another to indicate the quantity of a given part in an illustration.

Service Assembly Reference Numbers

Parts in service assemblies have reference numbers in the form a:b. The a represents the reference number of the entire service assembly and the b represents a sequential number unique to each part within the service assembly.

For example, a wheel assembly might be identified by reference number 6, the tire by 6:1, the valve by 6:2, and the wheel by 6:3. When you order the assembly identified by reference number 6, you receive all parts identified by reference numbers 6:1,6:2, and 6:3. However, you may also order any part individually. Reference numbers of this type appear in illustration and in parts lists.

Reference Numbers Indicating Quantity

In an illustration, if a reference number indicates more than one part, the reference number has the form nX y. The n represents the quantity of the part, the X is the multiplication symbol, and the y represents the reference number.

For example, in an illustration, the reference number 2X 37 means that two of the parts identified by reference number 37 are indicated.

List of Abbreviations

AR: as required

ASM: assembly

BBC: blade brake control

BHTF: button head thread forming

CARR: carriage

CCW: counter clockwise

CW: clockwise

DEG: degrees

DPA: Dual Point Adjustment

ECM: electronic control module

EXT: external

FH: flat head

GA: gauge

HD: heavy-duty

HF: hex flange

HH: hex head

HHF: hex head flange

HHFTF: hex head flange thread forming

HJ: hex jam

HLH: hex lag head

HOC: height-of-cut

HSBH: hex socket button head

HSFH: hex socket flat head

HSH: hex socket head

HWH: hex washer head

HWHTF: hex washer head thread forming

HYD: hydraulic

LH: left hand

LP: Liquid Propane

NI: nylon insert

NPTF: national pipe thread fine

PFH: phillips flat head

PPH: phillips pan head

PPHTF: phillips pan head thread forming

PRH: phillips round head

PTH: phillips truss head

PTO: power-take-off

RH: right hand

ROPS: roll-over protection system

RRB: rear roller brush

SFH: slotted fillister head

SHH: slotted hex head

SHWH: slotted hex washer head

SPH: slotted pan head

SQH: square head

SRH: slotted round head

STD: standard

TAP: self tapping

TTH: torx truss head

© 2011—The Toro® Company
8111 Lyndale Avenue South
Bloomington, MN 55420

Contact us at www.Toro.com.
Printed in the USA.
All Rights Reserved

Contents

Frame and Hood Assembly . . . 4
Frame Assembly No. 120-6601 . . . 5
Fuel Tank and Control Panel Assembly . . . 6
Power Steering Assembly . . . 8
Steer Valve Assembly No. 108-2077 . . . 9
Traction Pedal Assembly . . . 10
Brake Pedal Assembly . . . 11
Battery and Engine Mount Assembly . . . 12
Power-Take-Off and Shaft Assembly . . . 13
Hydraulic Cylinder and Lift Arm Assembly . . . 14
Hydraulic Valve Assembly No. 119-4830 . . . 15
Radiator Assembly . . . 16
Transmission Installation Assembly . . . 18
Center Section Assembly Transmission Assembly No. 117-0849 . . . 20
Neutral Return Arm Assembly Transmission Assembly No. 117-0849 . . . 22
Fuel Delivery System Assembly . . . 23
Lower Control Panel Assembly . . . 24
Rear Axle and Tire Assembly . . . 25
Rear Axle Assembly . . . 27
Steering Cylinder Assembly No. 115-4525 . . . 28
Air Cleaner and Drive Coupling Assembly . . . 29
Air Cleaner Assembly No. 104-3427 . . . 30
Front Axle Assembly . . . 31
Engine Mounting and Clutch Assembly . . . 32
Engine, Fan and Muffler Assembly . . . 33
Front Axle Assembly No. 108-6599-03 . . . 34
Right and Left Hand Brake Assembly . . . 36
Crankcase Assembly . . . 37
Oil Pan Assembly . . . 38
Cylinder Head Assembly . . . 39
Gear Case Assembly . . . 40
Cylinder Head Cover Assembly . . . 41
Dipstick and Guide Assembly . . . 42
Main Bearing Case Assembly . . . 43
Cam Shaft and Idle Gear Assembly . . . 44
Piston and Crankshaft Assembly . . . 45
Flywheel Assembly . . . 46
Fuel Camshaft and Governor Shaft Assembly . . . 47
Idle Apparatus and Stop Solenoid Assembly . . . 48
Injection Pump Assembly . . . 49
Governor Assembly . . . 50
Speed Control Plate Assembly . . . 51
Nozzle Holder and Glow Plug Assembly . . . 52
Nozzle Holder Assembly . . . 53
Alternator and Pulley Assembly . . . 54
Alternator Components Assembly . . . 55
Starter Assembly . . . 56
Starter (Component Part) Assembly . . . 57
Water Flange and Thermostat Assembly . . . 58
Water Pump Assembly . . . 59
Valve and Rocker Arm Assembly . . . 60
Inlet and Exhaust Manifold Assembly . . . 61
Muffler Gasket and Operator Manual . . . 62
Upper and Lower Gasket Kits . . . 63
Attachments and Accessories . . . 64

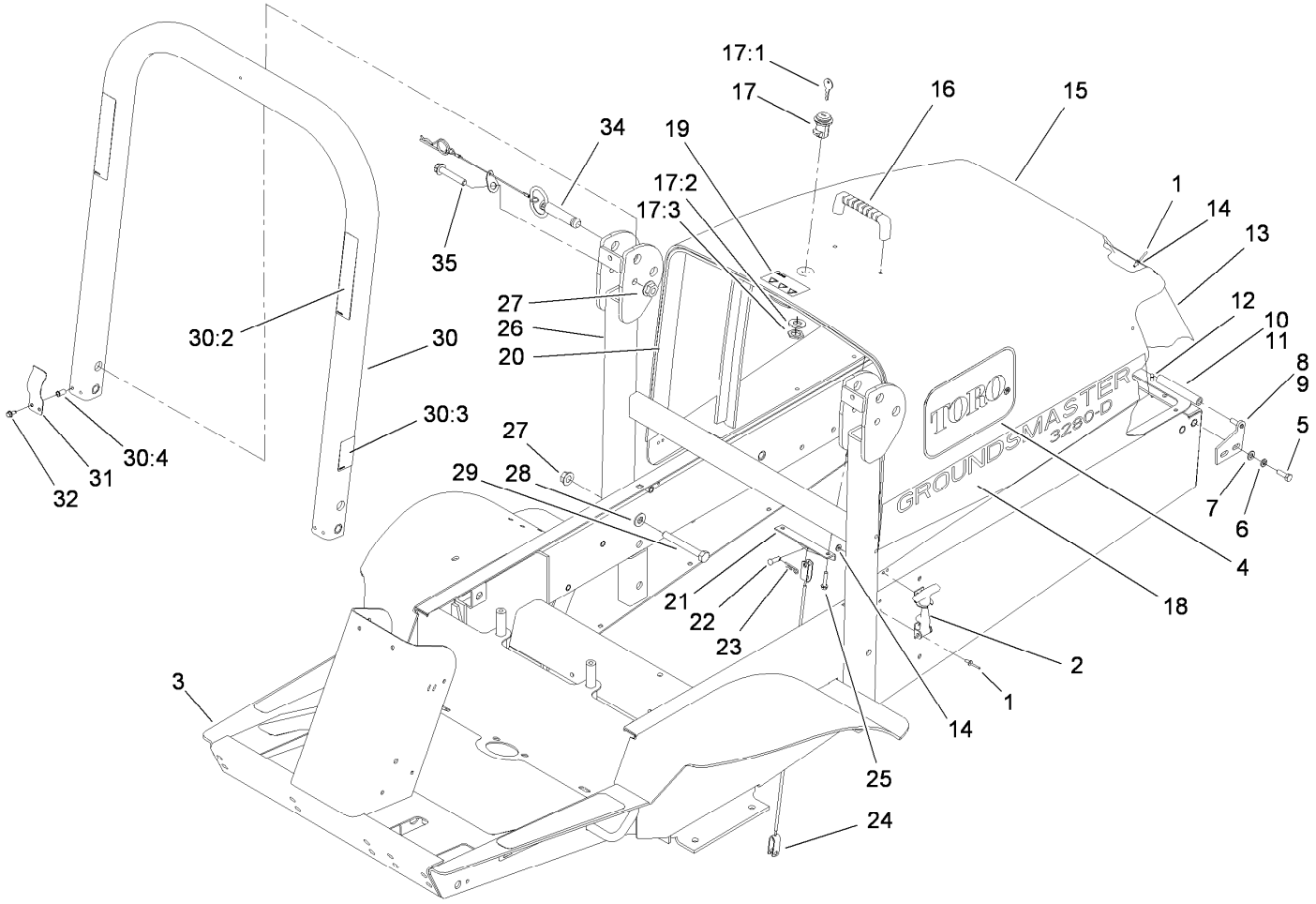

Frame and Hood Assembly

Ref.	Part Number	Qty.	Description
1	3269-4	18	Rivet-Pop
2	95-6339	2	Latch
3	120-6601	1	Frame ASM
4	66-6140	2	Decal
5	322-5	4	Screw-HH
6	3253-4	4	Washer-Lock
7	3256-23	4	Washer-Flat
8	105-0003-01	1	RH Hinge Pin ASM
9	105-0004-01	1	LH Hinge Pin ASM
10	105-4278-03	1	LH Hood Hinge ASM
11	105-4277-03	1	RH Hood Hinge ASM
12	3290-412	12	Rivet
13	105-0006-03	1	Screen-Hood
14	3256-14	14	Washer-Flat
15	119-2195	1	Hood ASM
16	65-5100	1	Handle-Door
17	98-9315	1	Latch-Locking
17:1	99-8350	2	Key-Latch, Locking
17:2		1	Washer-Switch ●
17:3		1	Nut-Switch ●

● Not serviced separately

Ref.	Part Number	Qty.	Description
18	108-2067	2	Decal
19	106-6754	1	Decal-Danger
20	105-3651	1	Strip-Foam
21	105-0088-03	1	Bracket-Cable, Hood
22	283-58	2	Pin-Clevis
23	3290-307	2	Pin-Hair
24	105-3650	1	Cable-Hood
25	46-8092	2	Screw-Plastite
26	110-5693-03	1	Lower ROPS ASM
27	32128-23	6	Nut-HF
28	3256-26	4	Washer-Flat
29	325-18	4	Screw-HH
30	110-5690	1	Upper ROPS ASM
30:2	108-2073	2	Decal-Warning
30:3	108-2074	1	Decal-ROPS
30:4	32148-11	4	Insert-Threaded
31	110-5696	2	Spring-Leaf
32	32144-10	4	Screw-HWH
34	103-4553	2	ROPS Fold Pin ASM
35	325-13	2	Screw-HH

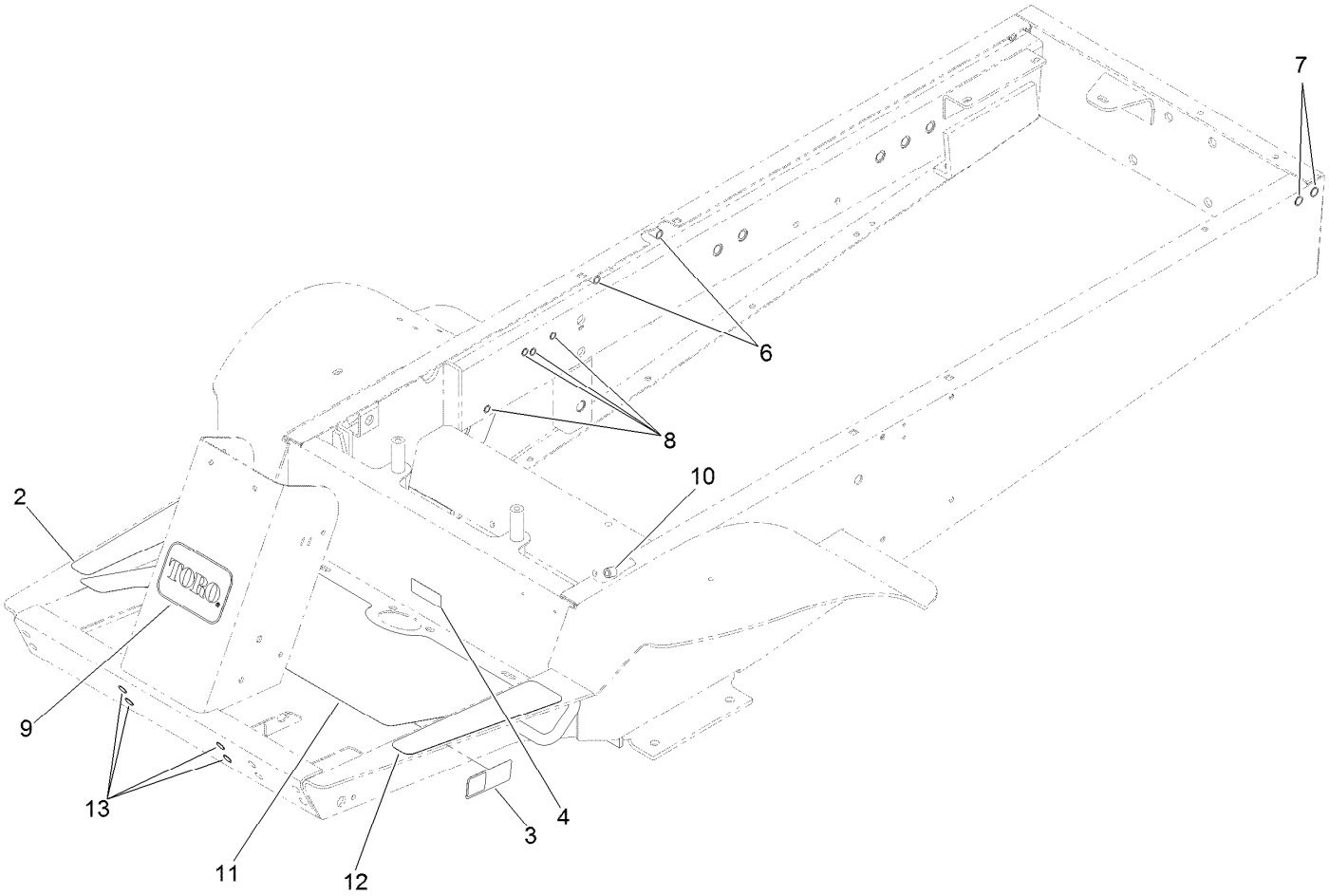

Frame Assembly No. 120-6601

Ref.	*Part Number*	*Qty.*	*Description*
2	93-7834	1	Decal-Footrest, RH
3	106-9206	2	Decal-Torque, Wheel
4	93-6686	1	Decal-Oil, HYD
6	32148-9	2	Insert-Nut
7	32148-7	4	Nut-Insert
8	32148-11	4	Insert-Threaded
9	67-1300	1	Decal
10	32148-8	4	Insert-Threaded
11	105-7160	1	Pad-Floor
12	66-3200	1	Tread-Footrest, LH
13	32148-10	4	Insert-Nut

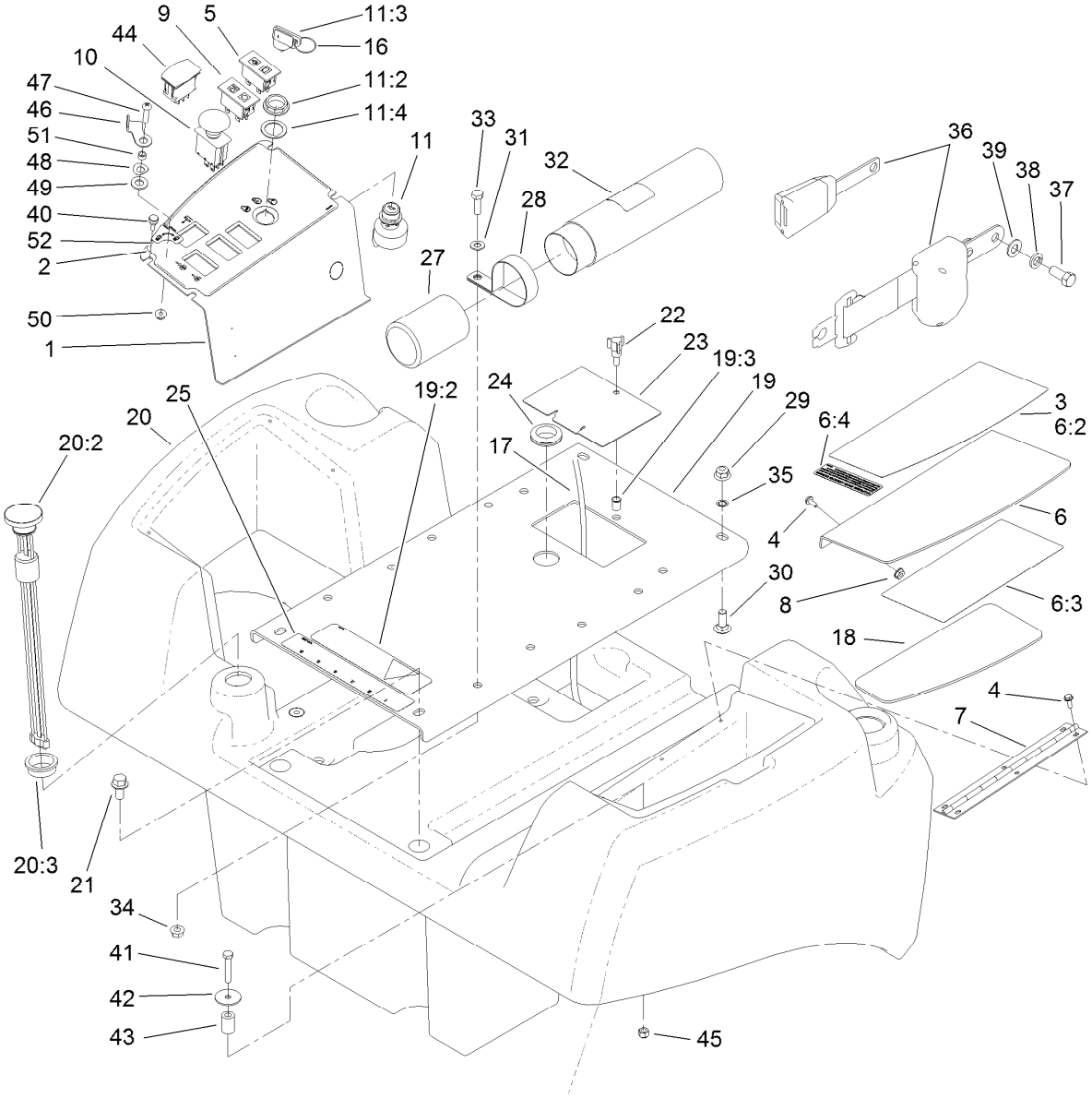

Fuel Tank and Control Panel Assembly

Ref.	Part Number	Qty.	Description
1	119-4839-03	1	Plate-Control Panel
2	119-4840	1	Decal-Panel, Control
3	108-6585	1	Decal-Danger
4	112-6349	6	Screw-HWH
5	100-8070	1	Lamp-Warning
6	108-6581	1	Cover ASM
6:2	114-2855	1	Decal-Danger
6:3	115-3027	1	Decal-Service
6:4	117-2718	1	Decal-Arrester, Spark
7	108-2024	1	Hinge
8	32149-8	3	Nut-Keps
9	100-8071	1	Lamp-Warning
10	93-9999	1	Switch-PTO
11	106-5269	1	Ignition Switch ASM
11:2	108-8660	1	Nut-Mounting
11:3	106-5270	1	Key Set-Ignition
11:4	108-8659	1	Washer-Backup
16	98-9321	1	Ring-Key
17	108-8657	1	Harness-Wire, Seat
18	108-2013	1	Pad-Rubber
19	108-6580	1	Seat Plate ASM

Ref.	Part Number	Qty.	Description
19:2	93-7841	1	Decal-Warning
19:3	32148-6	1	Insert-Nut
20	108-6596	1	Fuel Tank ASM
20:2	108-2025	1	Gauge-Fuel
20:3	95-8972	1	Grommet
21	3234-1	2	Screw-HHF
22	233-70	1	Knob-Star, Three
23	108-2027-03	1	Cover-Bypass
24	240-5	1	Grommet
25	105-2511	1	Decal-Instructions, Starting
27	104-7048	1	Cap-Housing
28	2412-133	2	R-Clamp
29	104-8301	2	Nut-Flange, NI
30	3231-2	2	Screw-CARR
31	3256-23	2	Washer-Flat
32	104-7050	1	Tube-Manual
33	322-5	2	Screw-HH
34	32128-20	2	Nut-HF
35	32151-72	2	Ring-Retaining
36	110-0413	1	Seatbelt-Retractable
37	3212-4	2	Screw-HH

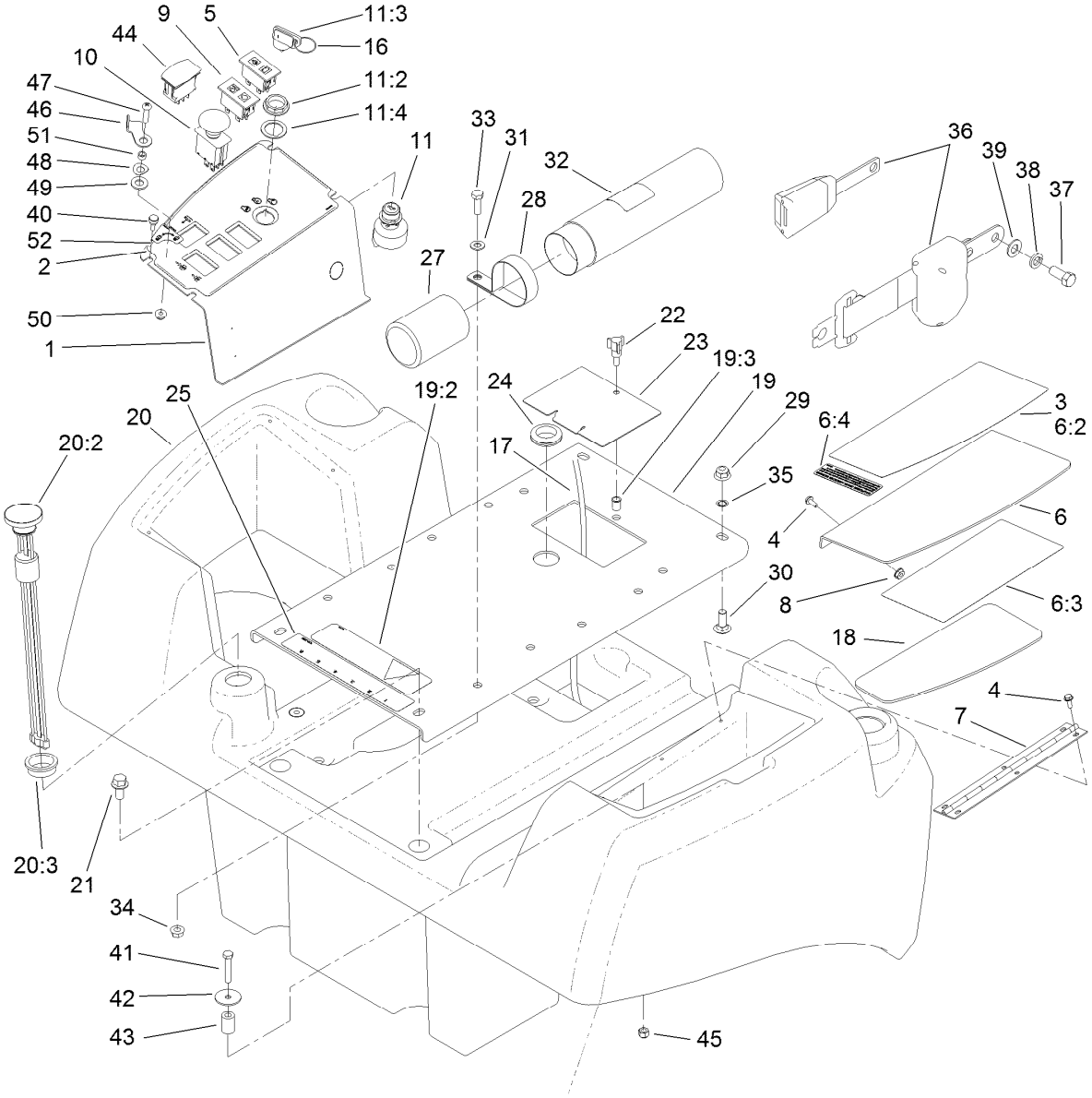

Fuel Tank and Control Panel Assembly (continued)

Ref.	Part Number	Qty.	Description
38	3253-6	2	Washer-Lock
39	3256-25	2	Washer-Flat
40	120-6555	4	Screw-Thumb
41	321-9	1	Screw-HH
42	3256-55	1	Washer-Flat
43	108-9688	1	Spacer
44	105-4320	1	Switch
45	3296-42	1	Nut-Lock, NI

Ref.	Part Number	Qty.	Description
46	120-6553	1	Stop-Ce
47	106-9518	1	Screw-PRH
48	3290-301	1	Washer-Spring
49	3256-80	1	Washer-Flat
50	104-7201	1	Nut-HF
51	120-6564	1	Spacer
52	120-6563	1	Decal-Ce Stop

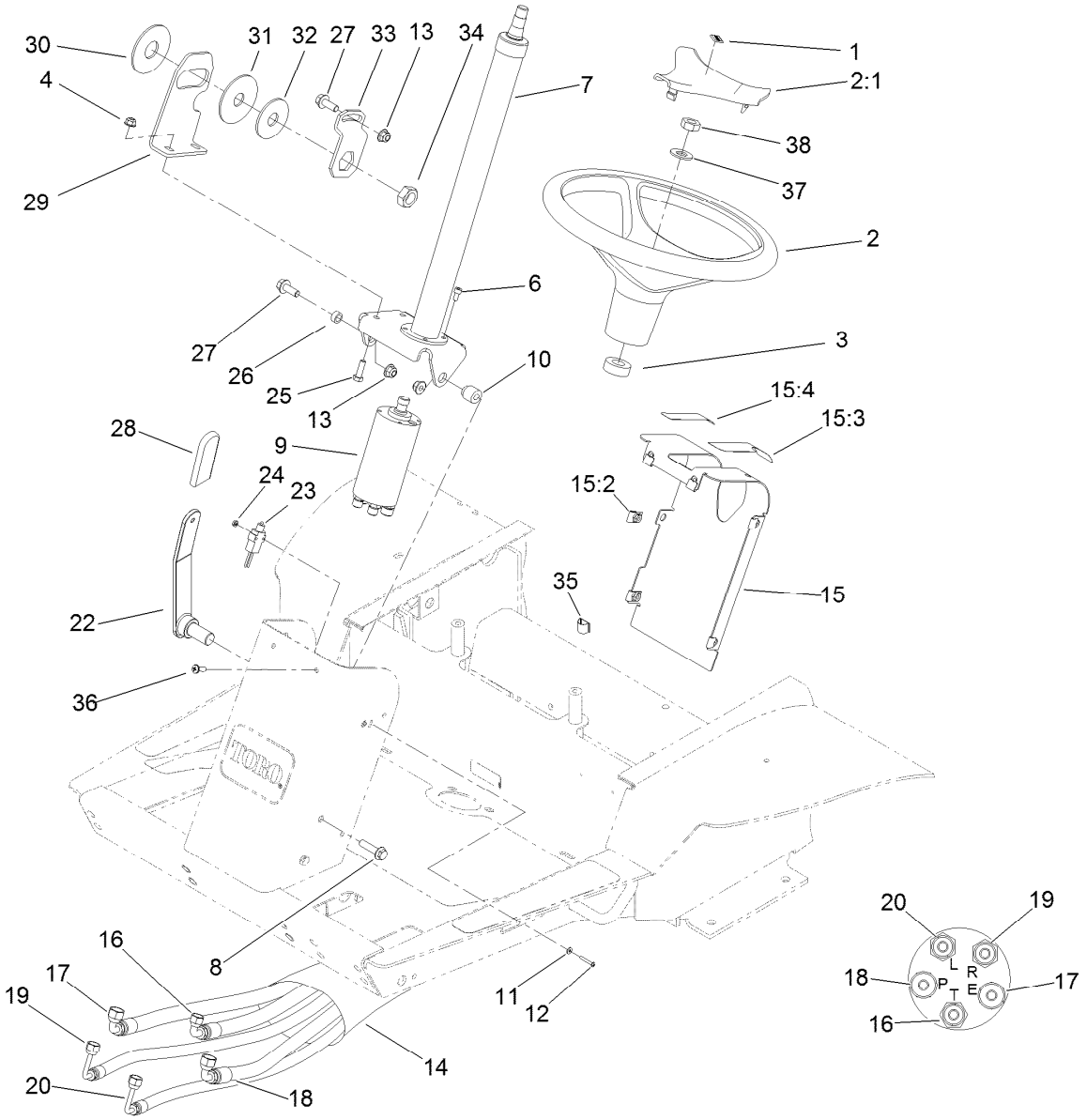

Power Steering Assembly

Ref.	Part Number	Qty.	Description
1	98-1459	1	Decal
2	98-1471	1	Wheel-Steering
2:1	98-1468	1	Cover-Wheel, Steering
3	21-9260	1	Cover-Dust
4	104-8300	2	Nut-Flange, NI
6	105-2409	4	Screw-HSH
7	114-2884	1	Column ASM
8	3234-18	1	Screw-HHF
9	108-2077	1	Steering Valve ASM
10	105-7166	1	Spacer
11	3256-53	2	Washer-Flat, #6
12	3250-35	2	Screw-PPH
13	104-8301	3	Nut-Flange, NI
14	44-8530	1	Protector-Sleeve
15	105-7180	1	Tower Panel ASM
15:2	105-7170	6	Nut-Retainer
15:3	105-7179	1	Decal-Brake, Parking
15:4	82-8940	1	Decal-Steering, Tilt
16	108-2089	1	Hose ASM
17	119-3911	1	Hose ASM

Ref.	Part Number	Qty.	Description
18	108-2080	1	Hose ASM
19	108-2086	1	Hose ASM
20	108-2087	1	Hose ASM
22	108-6092	1	Lever-Steering, Tilt
23	99-3410	1	Switch
24	32149-6	2	Nut-Keps
25	322-5	2	Screw-HH
26	80-2960	1	Spacer-Tower
27	3234-42	2	Screw-HHF
28	21-1880	1	Grip-Handle
29	105-7181-03	1	Plate-Pivot
30	31-0390	1	Disc-Friction
31	82-9010	1	Disc-Friction
32	80-2930	1	Washer-Flat
33	80-2880	1	Bracket-Tilt
34	3218-7	1	Nut-Jam
35	105-7188	2	Clamp-Adhesive
36	3250-32	6	Screw-PPH
37	3256-27	1	Washer-Flat
38	3296-33	1	Nut-Lock, NI

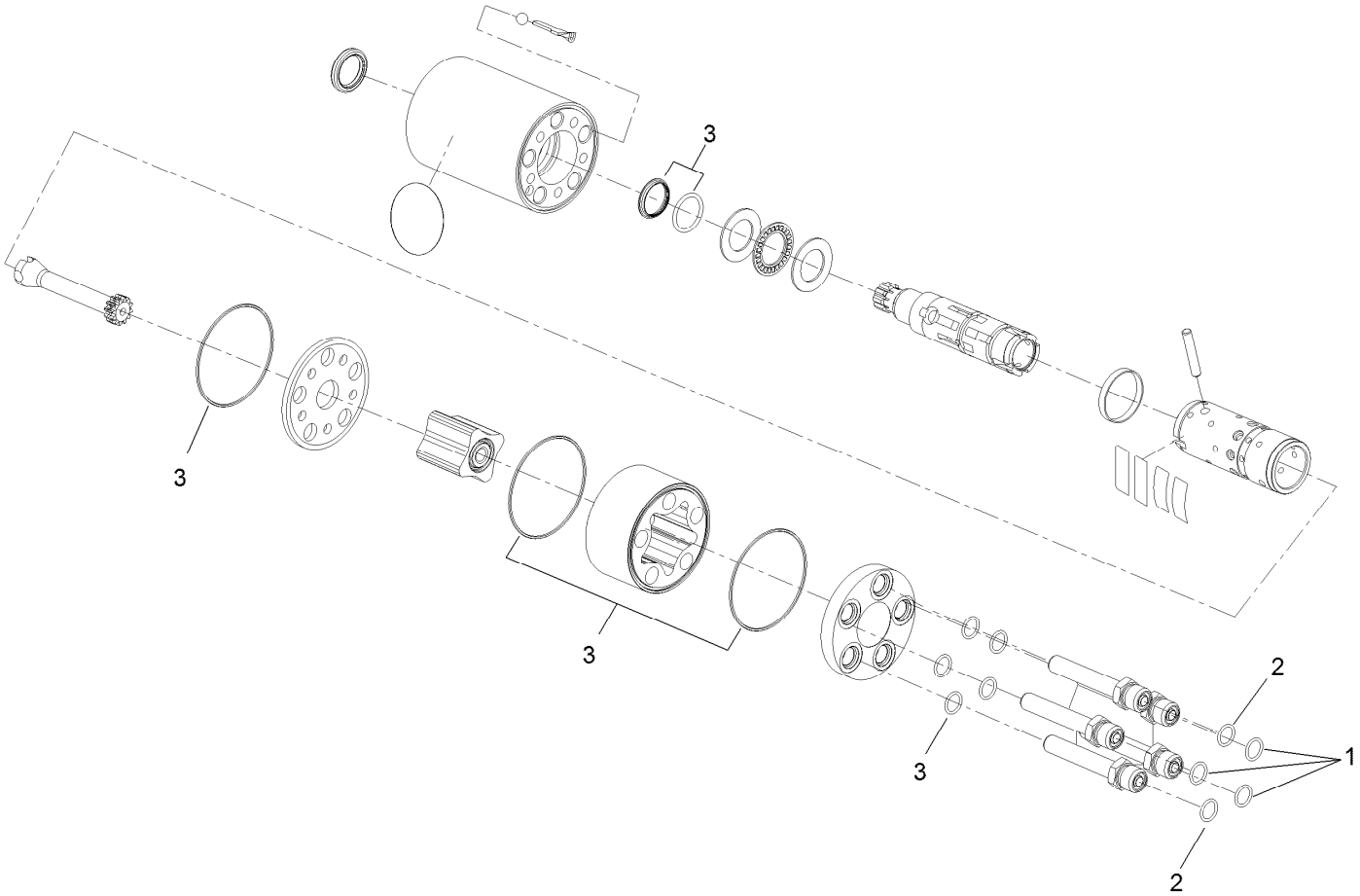

Steer Valve Assembly No. 108-2077

Ref.	*Part Number*	*Qty.*	*Description*
1	237-21	3	O-Ring
2	237-22	2	O-Ring
3	106-6716	1	Seal Kit

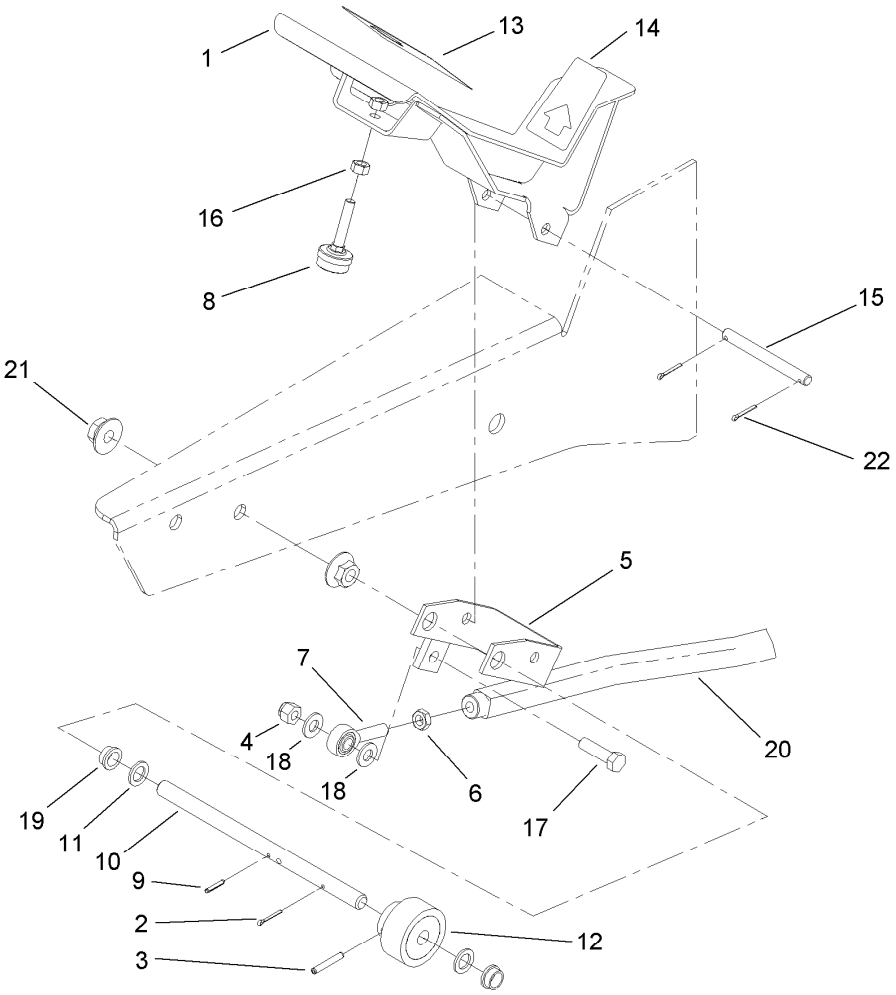

Traction Pedal Assembly

Ref.	*Part Number*	*Qty.*	*Description*
1	105-7150-03	1	Pedal ASM
2	3272-6	1	Pin-Cotter
3	32121-6	1	Pin-Roll, Slotted
4	3296-39	1	Nut-Lock, NI
5	92-8854-03	1	Pivot Bracket ASM
6	3220-3	1	Nut-HJ
7	2411-36	1	Bearing-End, Rod
8	32141-36	1	Screw-Adjustment, Level
9	32121-50	1	Pin-Spring
10	92-5534	1	Shaft-Pedal, Traction
11	5-7570	2	Washer-Flat
12	28-5220	1	Friction Wheel ASM
13	94-3307	1	Pad-Pedal, Traction
14	94-3308	1	Pad-Pedal, Traction
15	92-5537	1	Pin-Pedal, Traction
16	3217-6	2	Nut-Hex
17	323-29	1	Screw-HH
18	3256-24	2	Washer-Flat
19	256-156	2	Bushing-Flange
20	108-8661-03	1	Traction Rod ASM
21	32128-56	2	Nut-HF
22	3272-10	2	Pin-Cotter

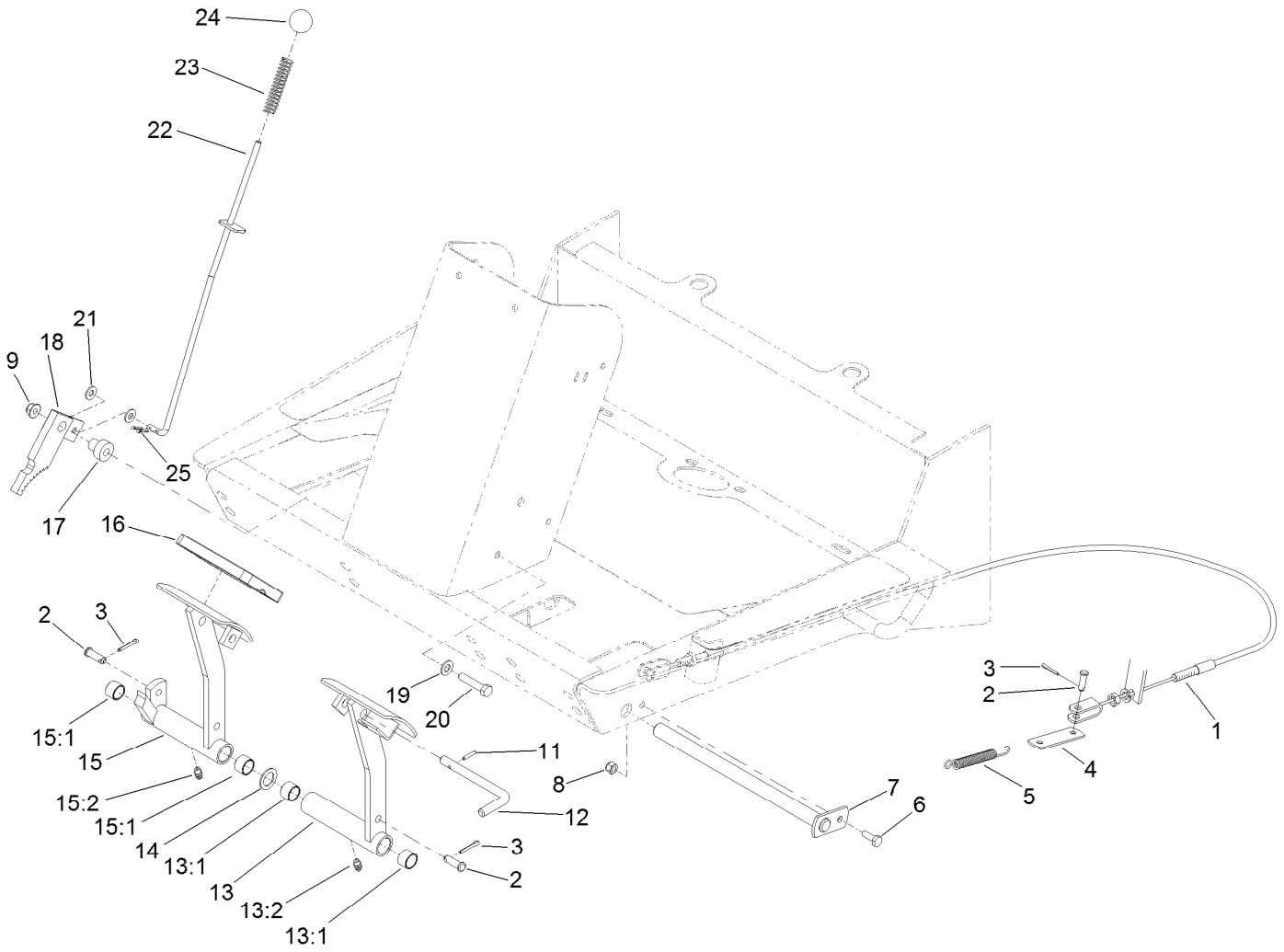

Brake Pedal Assembly

Ref.	Part Number	Qty.	Description
1	108-6556	2	Cable-Brake
2	283-58	4	Pin-Clevis
3	3272-10	4	Pin-Cotter
4	63-6750	2	Link-Cable, Brake
5	3-7243	2	Spring-Extension
6	321-4	1	Screw-HH
7	63-6210-03	1	Pin-Brake
8	3296-42	1	Nut-Lock, NI
9	104-8300	1	Nut-Flange, NI
11	32121-50	1	Pin-Spring
12	63-7880	1	Pin-Latch, Brake
13	63-6180	1	Pedal-Brake, LH
13:1	256-42	2	Bushing
13:2	302-5	1	Fitting-Grease

Ref.	Part Number	Qty.	Description
14	3256-69	2	Washer-Flat
15	120-6597	1	RH Brake Pedal ASM
15:1	256-42	2	Bushing
15:2	302-5	1	Fitting-Grease
16	93-8742	2	Footpad-Brake
17	105-7156	1	Spacer
18	63-7900-03	1	Rack ASM
19	3256-23	1	Washer-Flat
20	322-7	1	Screw-HH
21	3256-22	2	Washer-Flat
22	105-7168	1	Rod ASM
23	71-8310	1	Spring-Compression
24	233-17	1	Knob
25	3272-5	2	Pin-Cotter

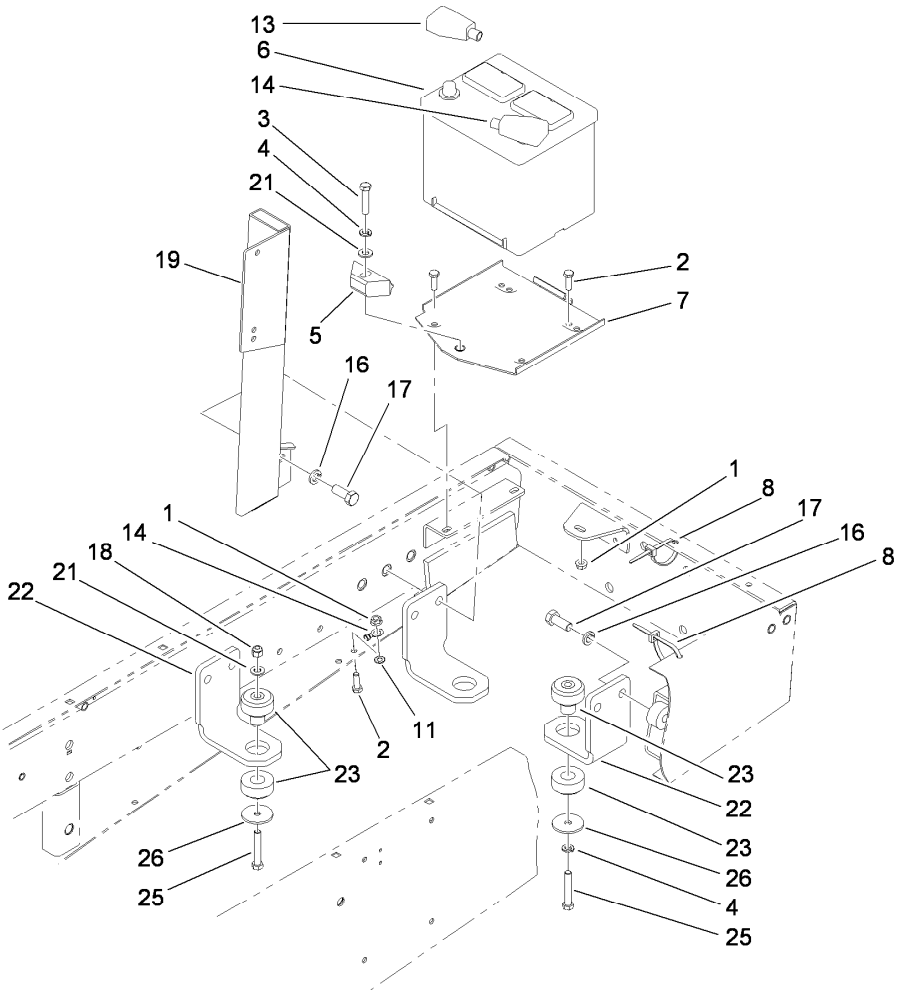

Battery and Engine Mount Assembly

Ref.	Part Number	Qty.	Description
1	32128-20	4	Nut-HF
2	322-5	4	Screw-HH
3	323-9	1	Screw-HH
4	3253-21	2	Washer-Lock
5	66-2490	1	Retainer-Battery
6	106-5187	1	Battery
7	94-7343	1	Battery Base ASM
8	3290-378	2	Tie-Cable
11	3255-8	1	Washer-Lock
13	104-0086	1	Cable-Battery, Positive
14	105-0040	1	Cable-Battery, Negative
16	3253-7	8	Washer-Lock
17	3213-2	8	Screw-HH
18	3296-39	3	Nut-Lock, NI
19	105-2513-03	1	Air Cleaner Mount ASM
21	3256-24	4	Washer-Flat
22	114-2867-03	4	Bracket-Mount, Engine
23	115-0600	4	Mount-Engine
25	323-14	4	Screw-HH
26	63-7400	4	Washer-Rebound

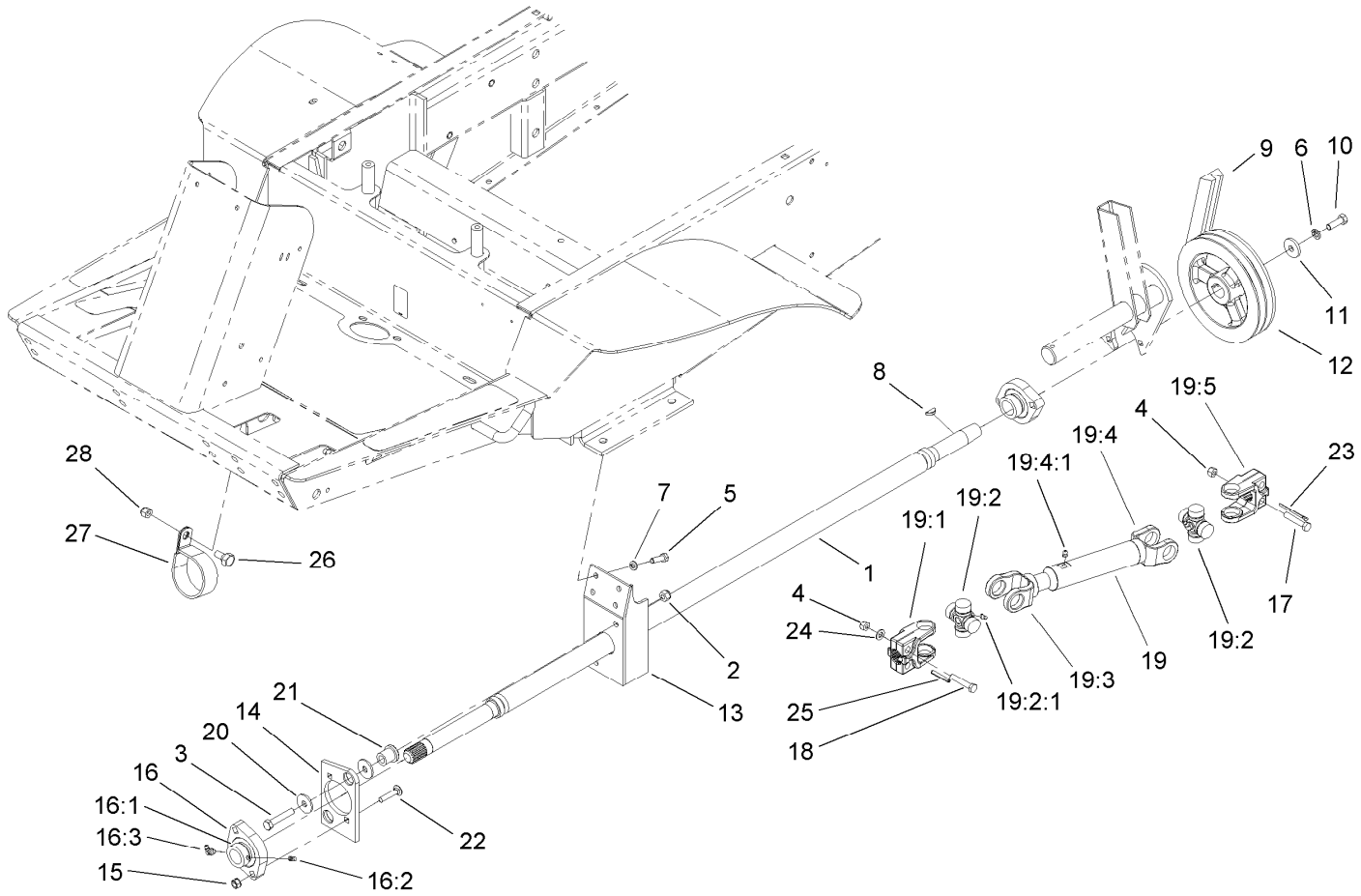

Power-Take-Off and Shaft Assembly

Ref.	Part Number	Qty.	Description
1	92-8855-03	1	Shaft-PTO
2	3296-39	2	Nut-Lock, NI
3	323-10	2	Screw-HH
4	3296-29	5	Nut-Lock, NI
5	322-5	4	Screw-HH
6	3253-21	1	Washer-Lock
7	3253-4	4	Washer-Lock
8	3257-5	1	Key-Woodruff
9	63-6240	1	V-Belt
10	323-18	1	Screw-HH
11	29-4730	1	Washer-Flat
12	43-5320-03	1	Pulley-PTO
13	92-8751-03	1	PTO Bearing Bracket ASM
14	84-7580	1	Plate-Support, Bushing
15	32149-1	2	Nut-Keps
16	92-8799	1	Bearing-Flange
16:1	251-77	1	Collar-Lock, Bearing
16:2	3245-35	1	Screw-Set, HSH
16:3	302-40	1	Fitting-Grease

Ref.	Part Number	Qty.	Description
17	322-9	4	Screw-HH
18	322-14	1	Screw-HH
19	108-1366	1	PTO Drive Shaft ASM
19:1	54-9040	1	Yoke-End
19:2	54-9180	2	U-Joint Kit
19:2:1	62-3820	1	Fitting-Grease
19:3	108-6550	1	Shaft-Yoke, Slip
19:4	108-6551	1	Tube-Yoke, Slip
19:4:1	302-58	1	Fitting-Straight
19:5	54-9090	1	Yoke-End
20	63-8410	4	Washer
21	63-9750	2	Mount
22	3230-4	2	Screw-CARR
23	3272-15	1	Pin-Cotter
24	3256-23	1	Washer-Flat
25	32121-34	1	Pin-Roll
26	46-3380	1	Bolt-Shoulder
27	2412-102	1	Clamp-R
28	3296-39	1	Nut-Lock, NI

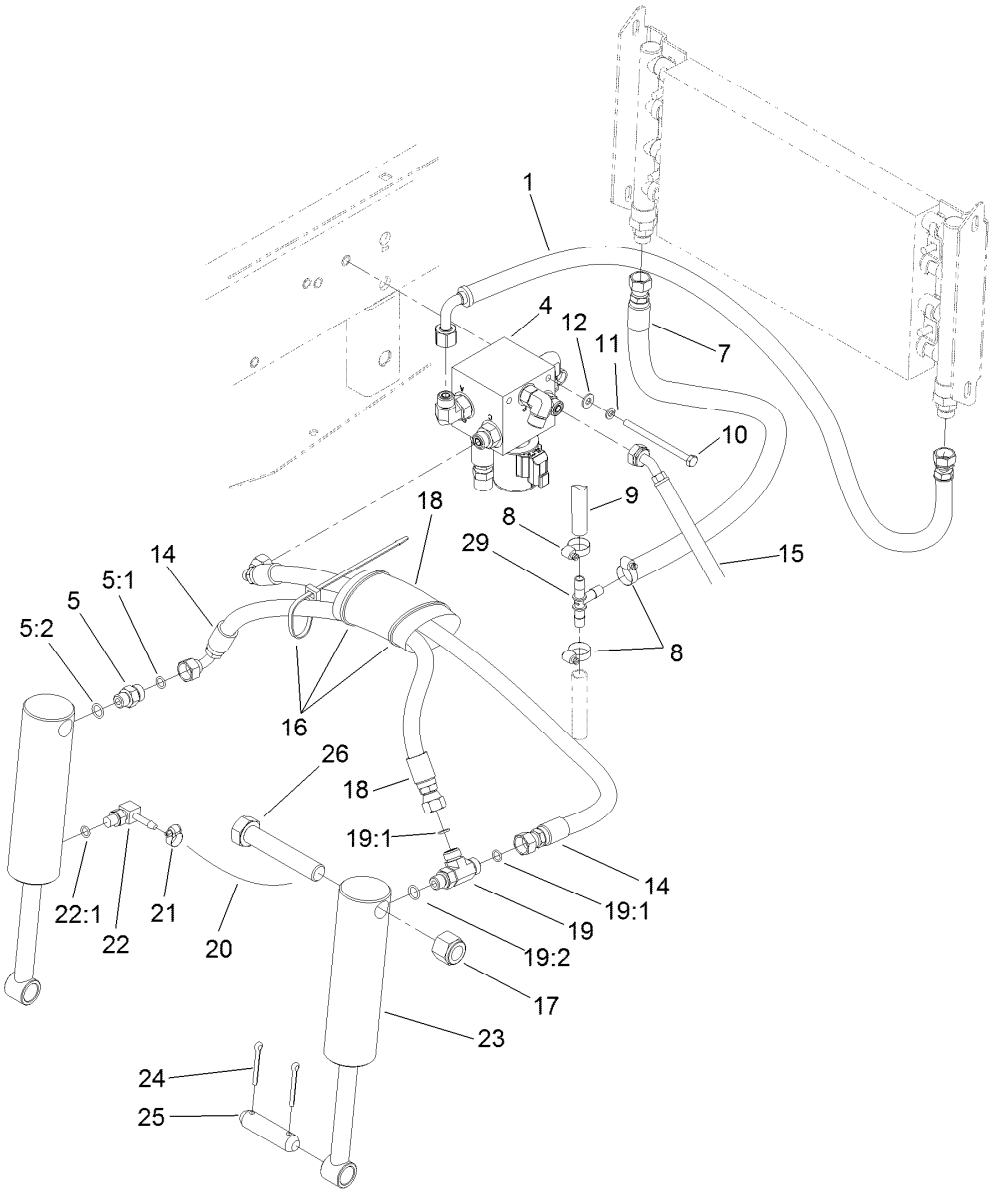

Hydraulic Cylinder and Lift Arm Assembly

Ref.	Part Number	Qty.	Description
1	120-6557	1	Hose ASM
4	119-4830	1	Valve ASM
5	340-2	1	Fitting-HYD, Straight
5:1	237-22	1	O-Ring
5:2	237-42	1	O-Ring
7	100-5641	1	Hose ASM
8	2412-36	3	Clamp-Hose
9	100-5649	1	Hose
10	321-28	2	Screw-HH
11	3253-3	2	Washer-Lock
12	3256-22	2	Washer-Flat
14	120-6572	2	Hose ASM-HYD
15	120-6556	1	Hose ASM
16	3290-378	4	Tie-Cable

Ref.	Part Number	Qty.	Description
17	3296-51	2	Nut-Lock, NI
18	56-7982	1	Sleeve-Protective
19	340-86	1	Fitting-Tee
19:1	237-22	2	O-Ring
19:2	237-42	1	O-Ring
20	92-5082	2	Hose-HYD
21	2412-108	2	Clamp-Worm
22	304-99	2	Stem-Hose
22:1	237-78	1	O-Ring
23	63-6630	2	Cylinder-HYD
24	3272-23	4	Pin-Cotter
25	27-4240	2	Pin-Cylinder
26	328-7	2	Screw-HH
29	354-107	1	Fitting-HYD, Tee

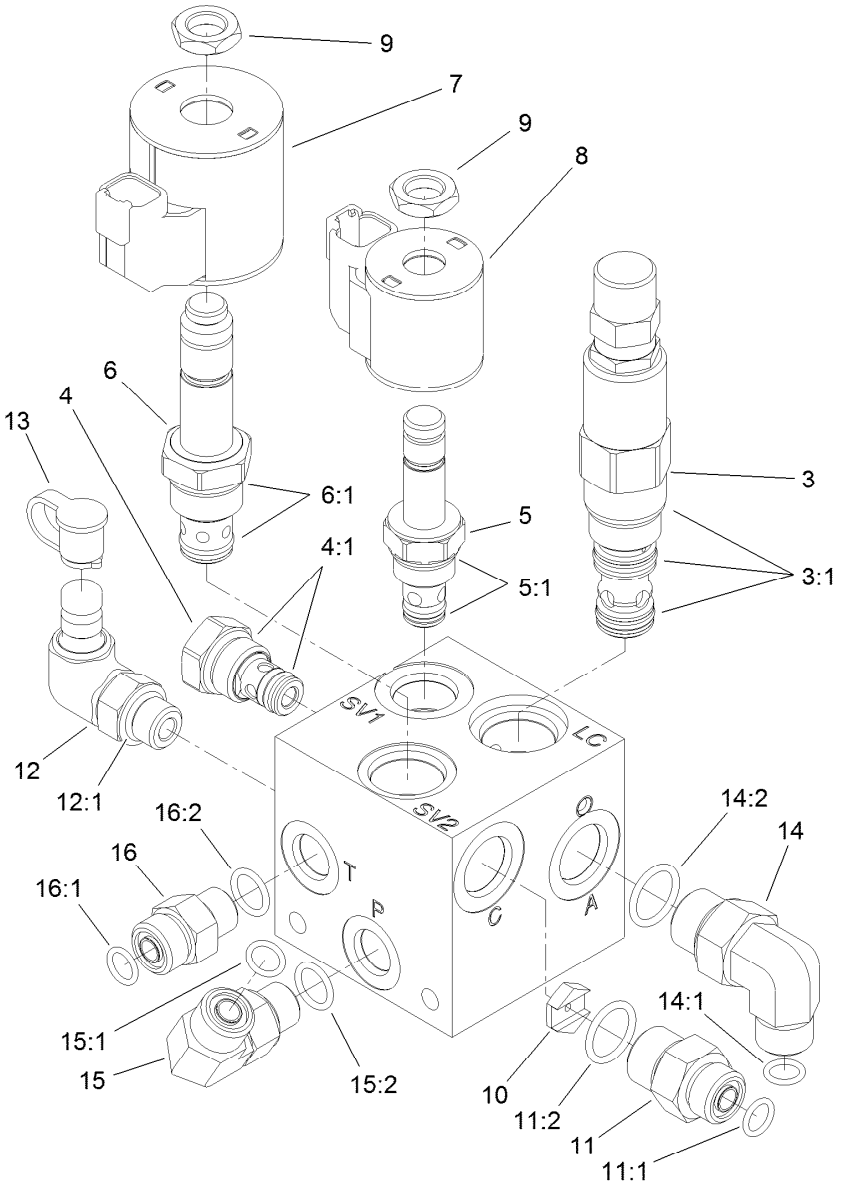

Hydraulic Valve Assembly No. 119-4830

Ref.	Part Number	Qty.	Description
3	120-6554	1	Valve-Logic
3:1	119-2159	1	Seal Kit
4	114-2873	1	Check Valve
4:1	105-9156	1	Seal Kit
5	120-6562	1	Valve-Solenoid
5:1	105-9156	1	Seal Kit
6	120-6561	1	Valve-Solenoid
6:1	105-9159	1	Seal Kit
7	115-3021	1	Coil-12V
8	119-8036	1	E-Coil,12 Vdc,-08
9	110-2634	1	Nut-Coil
10	120-6558	1	Orifice-Control, Flow (0.100, -8)
11	340-3	1	Adapter
11:1	237-22	1	O-Ring

Ref.	Part Number	Qty.	Description
11:2	237-79	1	O-Ring
12	120-6560	1	Fitting-Diagnostic, 90 DEG
12:1	237-78	1	O-Ring
13	120-6559	1	Cap-Cover, Dust
14	340-18	1	Fitting-HYD, 90 DEG
14:1	237-79	1	O-Ring
14:2	237-22	1	O-Ring
15	340-77	1	Fitting-HYD, 90 DEG
15:1	237-22	1	O-Ring
15:2	237-42	1	O-Ring
16	340-2	1	Fitting-HYD, Straight
16:1	237-22	1	O-Ring
16:2	237-42	1	O-Ring

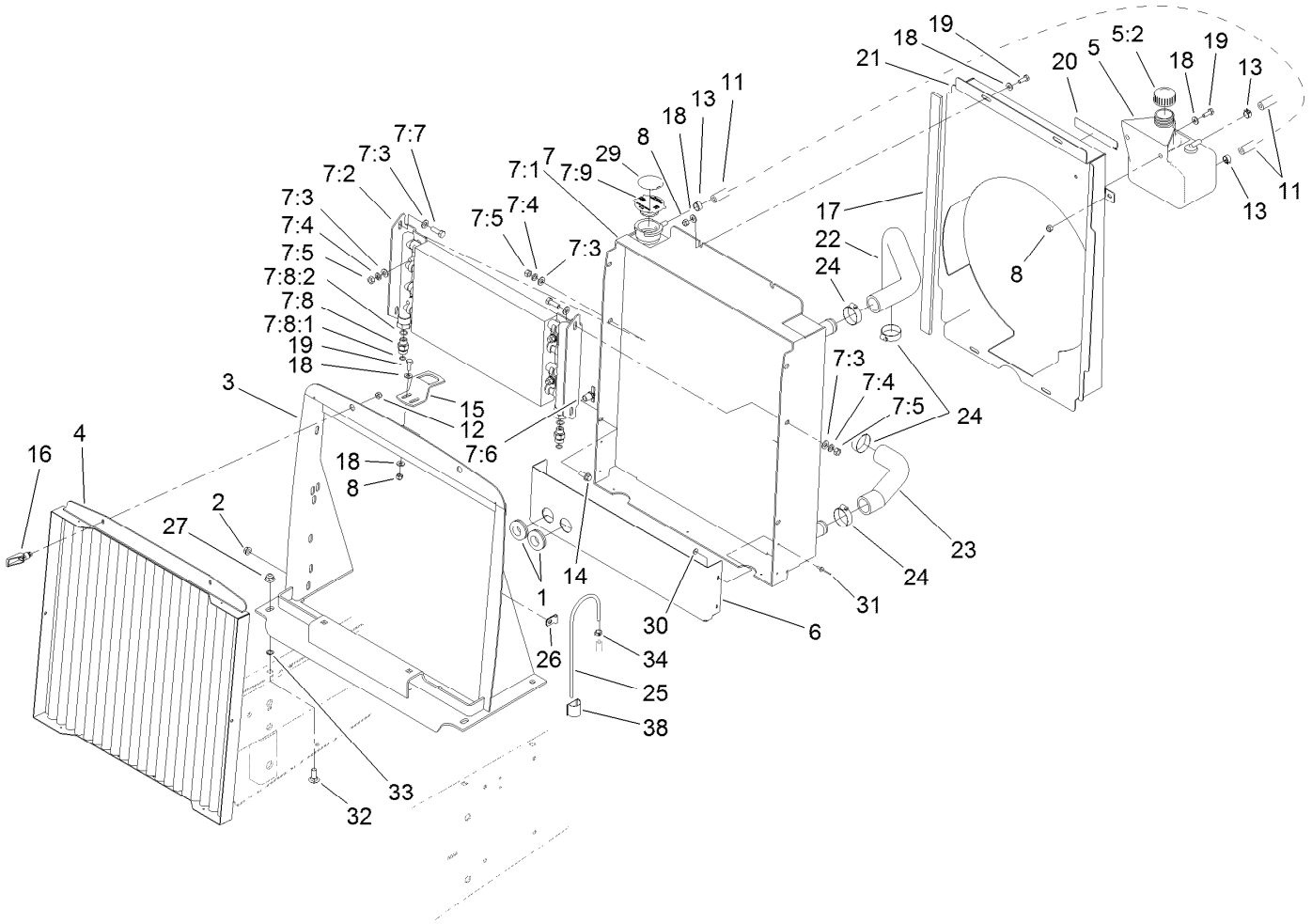

Radiator Assembly

Ref.	Part Number	Qty.	Description
1	240-4	2	Grommet-Rubber
2	32128-20	4	Nut-HF
3	120-6550-03	1	Radiator Frame ASM
4	108-2062-03	1	Screen ASM
5	93-5975	1	Coolant Reservior ASM
5:2	93-5960	1	Cap-Reservoir
6	110-9663-03	1	Shield-Radiator, Bottom
7		1	Cooling ASM ●
7:1	119-4845	1	Radiator
7:2	119-4846	1	Oil Cooler
7:3	3256-23	8	Washer-Flat
7:4	3253-4	6	Washer-Lock
7:5	3217-6	6	Nut-Hex
7:6	304-46	1	Draincock
7:7	322-5	2	Screw-HH
7:8	340-2	2	Fitting-HYD, Straight
7:8:1	237-22	1	O-Ring
7:8:2	237-42	1	O-Ring
7:9	66-3240	1	Cap-Radiator

Ref.	Part Number	Qty.	Description
8	3296-42	8	Nut-Lock, NI
11	109-0308	2	Hose-Fuel
12	1-804254	2	Nut-Lock, HH
13	92-2379	3	Clamp-Hose
14	3234-5	4	Screw-HHF
15	98-9316	1	Latch-Hood
16	74-5950	2	Latch-Swell
17	108-9683	2	Strip-Foam
18	3256-22	14	Washer-Flat
19	321-4	8	Screw-HH
20	93-7272	1	Decal-Warning
21	108-9678-03	1	Fan Shroud ASM
22	104-3443	1	Hose-Radiator, Upper
23	104-3442	1	Hose-Radiator, Lower
24	2412-34	4	Clamp-Hose
25	66-3180	1	Tube-Vent
26	2412-103	1	Clamp
27	104-8301	4	Nut-Flange, NI
29	106-5976	1	Decal-Warning

● Not serviced separately

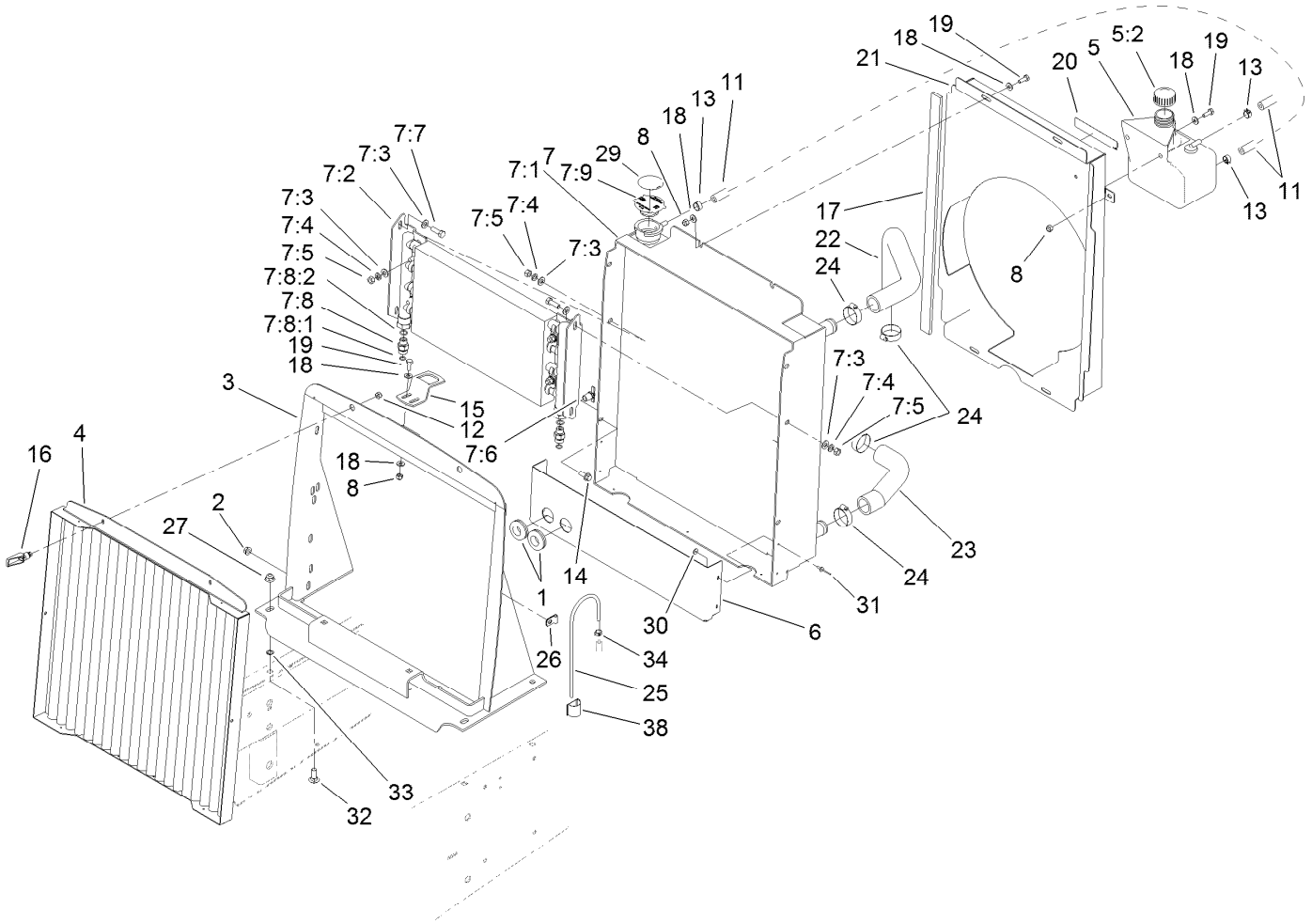

Radiator Assembly (continued)

Ref.	Part Number	Qty.	Description
30	3269-10	2	Washer-Back
31	3269-13	5	Rivet-Pop
32	3231-22	4	Screw-CARR
33	32151-72	4	Ring-Retaining
34	2412-98	1	Clamp
38	105-7188	1	Clamp-Adhesive

● Not serviced separately

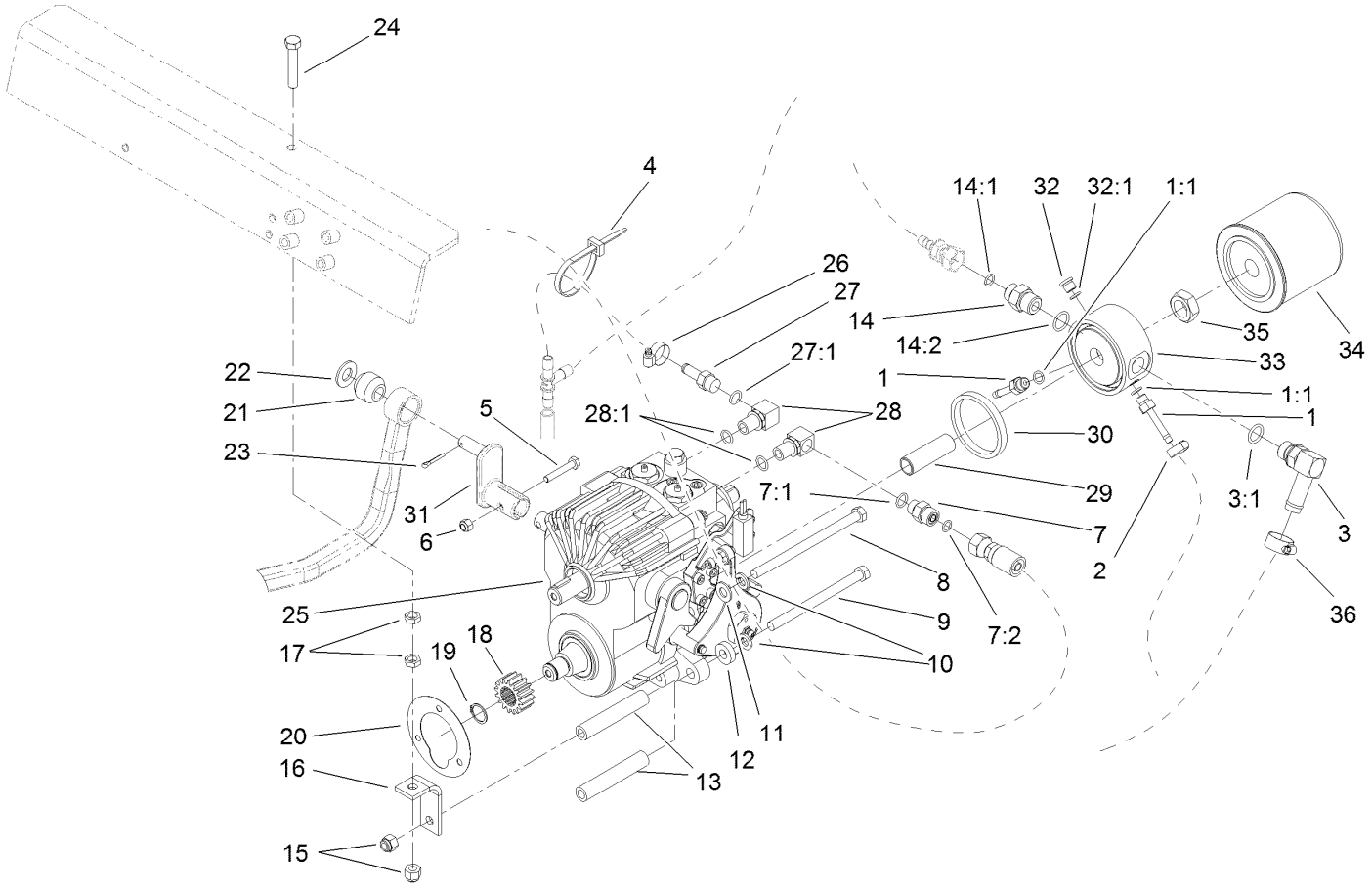

Transmission Installation Assembly

Ref.	Part Number	Qty.	Description
1	92-5512	2	Fitting-Hose, Barbed
1:1	237-78	1	O-Ring
2	2412-108	2	Clamp-Worm
3	92-5086	1	Fitting-Elbow, 90 DEG
3:1	237-79	1	O-Ring
4	3290-378	2	Tie-Cable
5	321-9	1	Screw-HH
6	3296-42	1	Nut-Lock, NI
7	82-8530	1	Fitting-Straight
7:1	237-42	1	O-Ring
7:2	237-22	1	O-Ring
8	27-9620	1	Screw-HH
9	323-39	3	Screw-HH
10	3253-21	4	Washer-Lock
11	3256-24	1	Washer-Flat
12	5-0652	1	Spacer
13	27-3680	4	Spacer-Mounting
14	340-3	1	Adapter
14:1	237-22	1	O-Ring
14:2	237-79	1	O-Ring
15	3296-39	2	Nut-Lock, NI

Ref.	Part Number	Qty.	Description
16	63-7170	1	Anchor-Transmission
17	3218-3	2	Nut-Jam
18	86-7220	1	Gear-Pinion
19	32120-72	1	Ring-Snap
20	27-3690	1	Gasket-Transmission
21	23-2270	1	Bushing-Rubber
22	3256-26	1	Washer-Flat
23	3272-10	1	Pin-Cotter
24	67-1900	1	Screw-HH
25	117-0849	1	Transmission ASM
26	2412-36	1	Clamp-Hose
27	353-979	1	Fitting-Straight
27:1	237-42	1	O-Ring
28	66-3110	2	Fitting-HYD, 90 DEG
28:1	237-42	1	O-Ring
29	92-5085	1	Union-Filter
30	92-5087	1	Seal-Adaptor, Filter
31	112-5098	1	Pump Lever
32	353-990	1	Plug
32:1	237-78	1	O-Ring
33	92-5076	1	Adapter-Filter

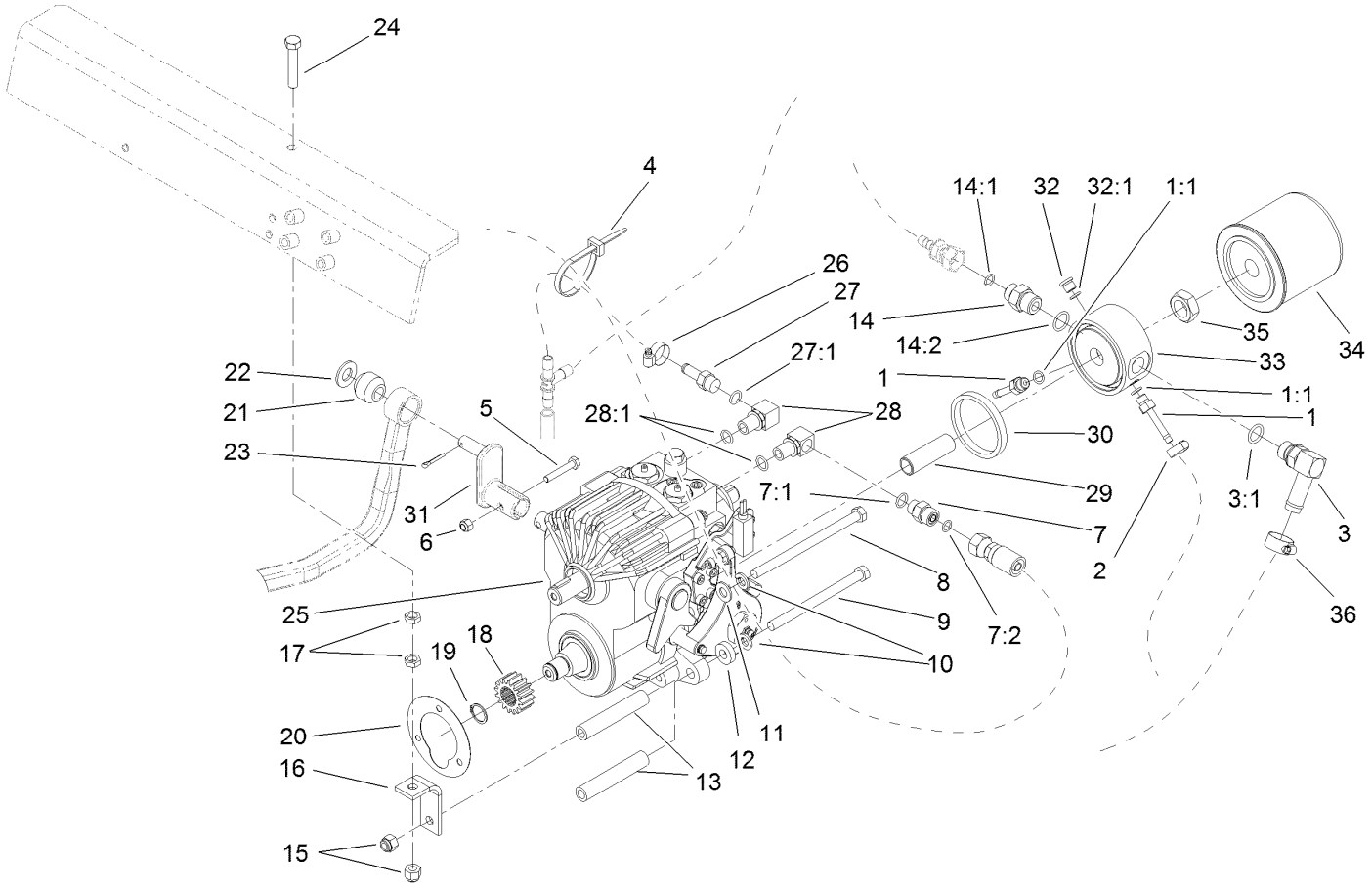

Transmission Installation Assembly (continued)

Ref.	Part Number	Qty.	Description
34	23-2300	1	Filter-Oil, Transmission

Ref.	Part Number	Qty.	Description
35	3220-7	1	Nut-Jam
36	2412-119	1	Clamp-Hose, Worm Drive

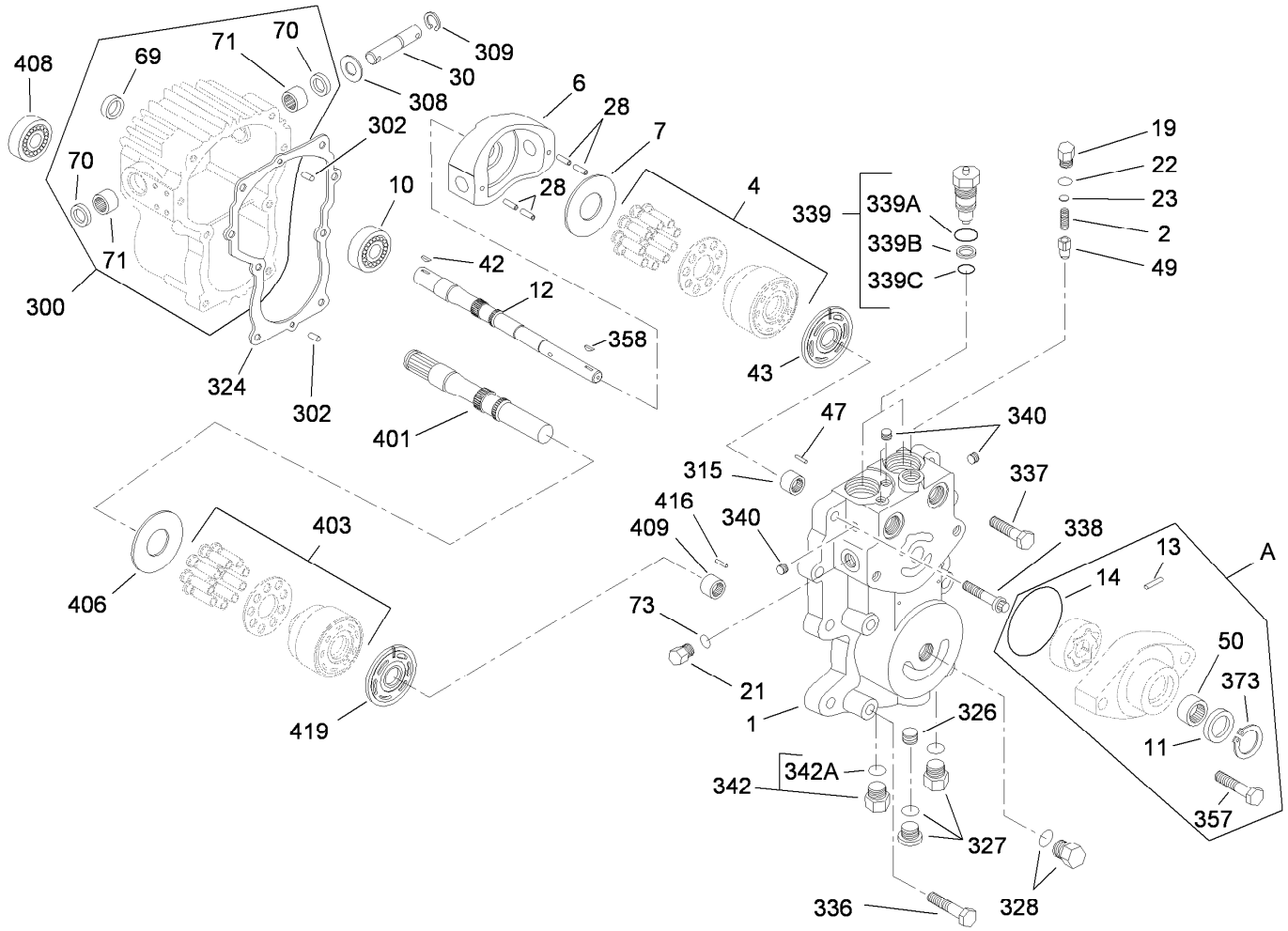

Center Section Assembly
Transmission Assembly No. 117-0849

Ref.	Part Number	Qty.	Description
1	92-5716	1	Section-Center
2	25-2570	1	Spring-Valve
4	48-1800	1	Cylinder Block Kit
6	25-2450	1	Plate-Swash, Variable
7	25-2380	1	Plate-Thrust
A	117-6988	1	Charge Pump Kit
10	251-8	1	Bearing-Ball
11	94-2975	1	Seal-Shaft
12	28-3640	1	Shaft-Pump
13	38-2680	1	Pin
14	28-3520	1	O-Ring
19	25-2460	1	Plug-HH
21	25-2460	1	Plug-HH
22	28-3400	1	O-Ring
23	25-2470	1	Pack-Shim
28	83-3880	4	Pin-Spring
30	28-3670	1	Shaft-Trunnion
42	3257-5	1	Key-Woodruff
43	110-3051	1	Plate-Valve
47	25-2430	1	Pin-Dowel
49	67-8070	1	Cone-Relief, Charge
50	28-3480	1	Bearing
69	93-4133	1	Seal-Lip
70	103461	2	Seal
71	252-82	2	Bearing-Needle
73	28-3400	1	O-Ring

Ref.	Part Number	Qty.	Description
300	110-3052	1	Housing ASM
302	353-599	2	Pin-Dowel
308	25-2510	1	Washer-Flat
309	32151-46	1	Ring-Retaining
315	25-3300	1	Bearing-Needle
324	28-3340	1	Gasket
326	107-4370	1	Plug-Expansion
327	67-9090	1	Plug ASM
328	28-3440	1	Plug-Threaded
336	323-10	4	Screw-HH
337	75-0110	2	Capscrew-HH
338	28-3530	2	Capscrew
339	49-7830	2	Check Valve Kit
339A	28-3570	2	O-Ring
339B	28-3580	2	Ring-Back Up
339C	28-3590	2	O-Ring
340	75-0160	4	Plug-Pipe
342	28-3440	2	Plug-Threaded
342A	75-0240	2	O-Ring
357	92-1773	2	Screw-HHF
358	3257-5	1	Key-Woodruff
373	94-2976	1	Ring-Retaining
401	49-8200	1	Shaft-Motor
403	48-1800	1	Cylinder Block Kit
406	25-2380	1	Plate-Thrust
408	28-3300	1	Bearing-Roller

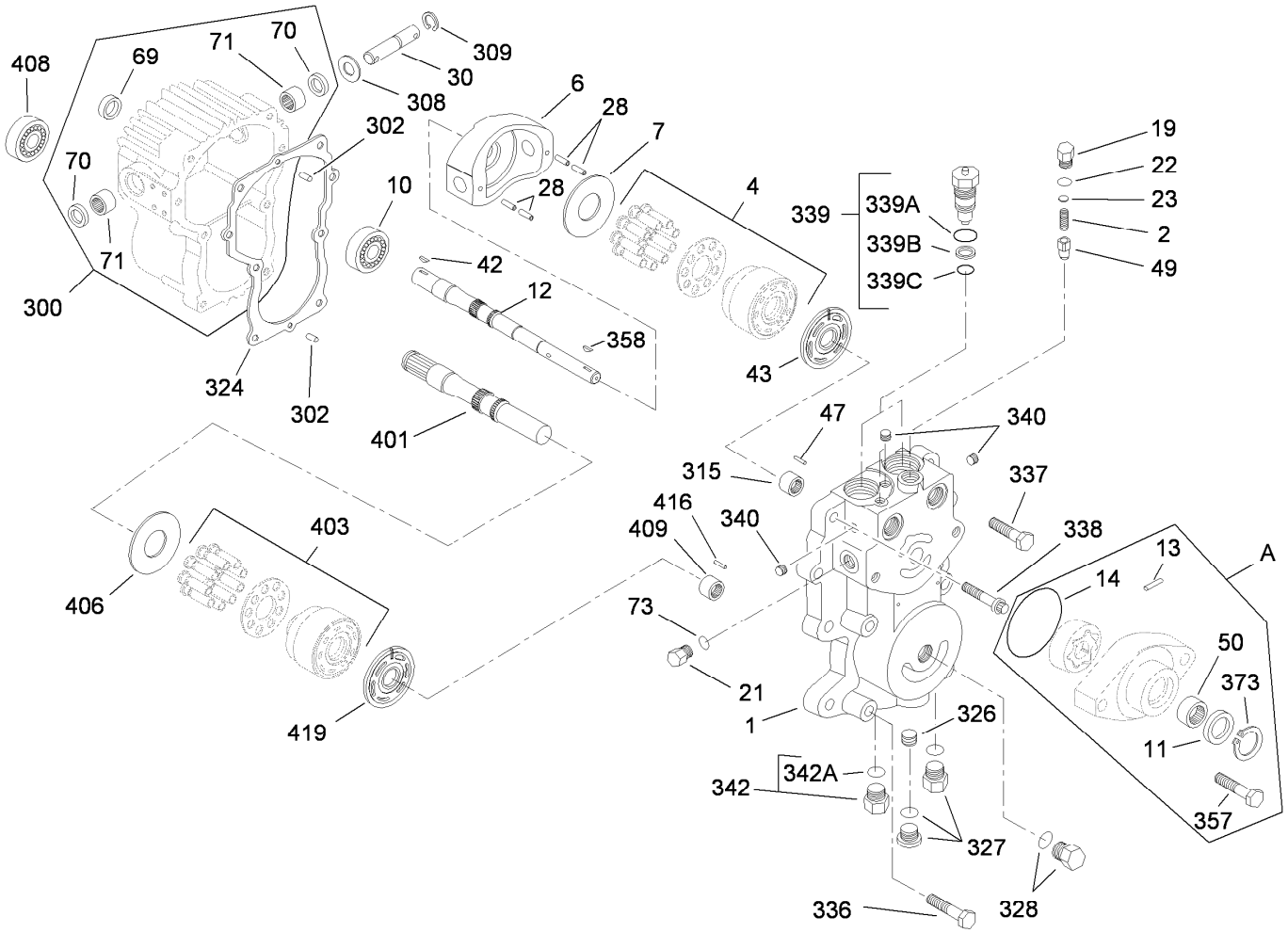

Center Section Assembly
Transmission Assembly No. 117-0849 (continued)

Ref.	Part Number	Qty.	Description
409	25-3300	1	Bearing-Needle

Ref.	Part Number	Qty.	Description
416	25-2430	1	Pin-Dowel
419	28-3380	1	Plate-Valve, Motor

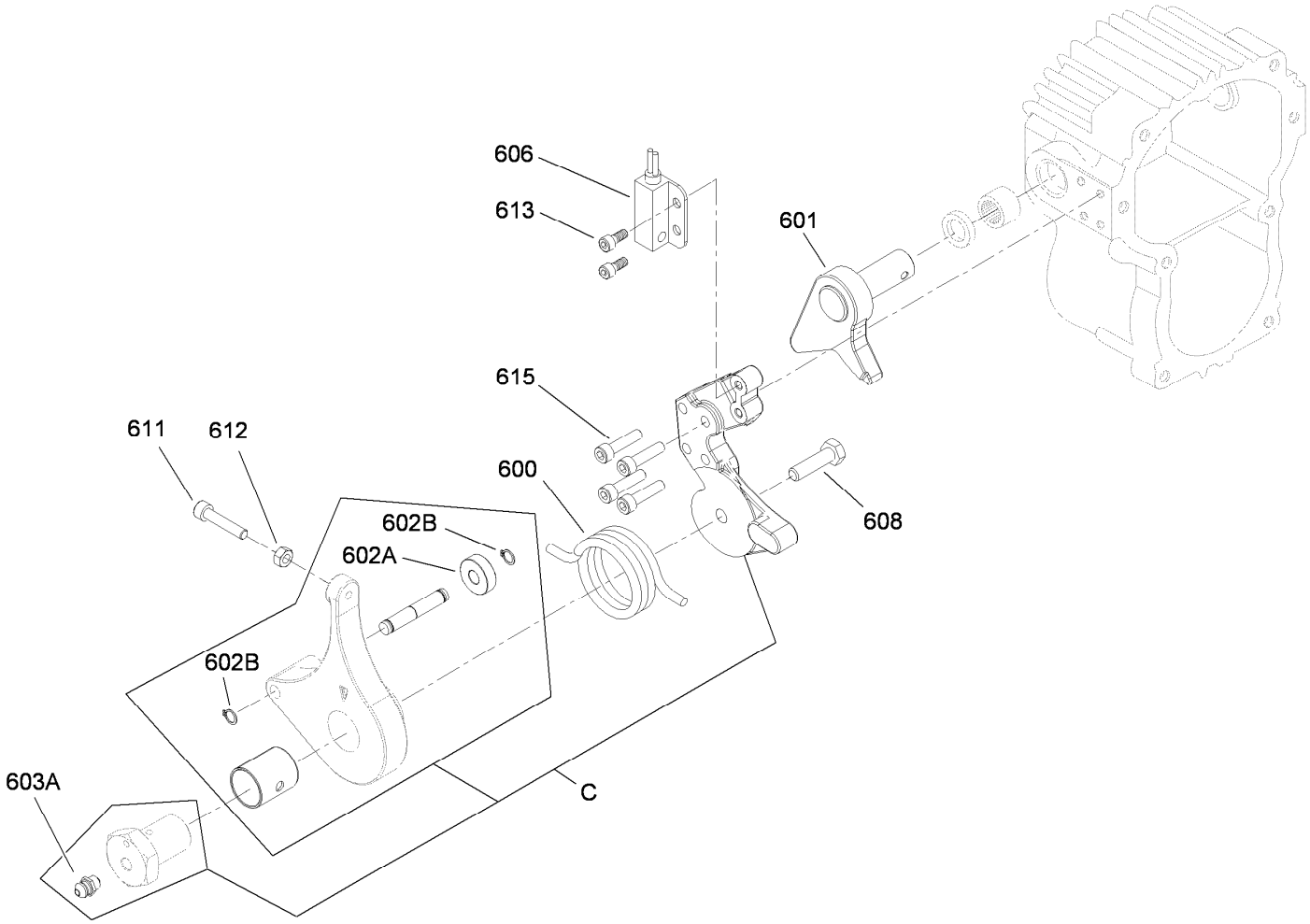

Neutral Return Arm Assembly
Transmission Assembly No. 117-0849

Ref.	*Part Number*	*Qty.*	*Description*
C	110-5685	1	Neutral Return ASM
600	110-3053	1	Spring-Return, Neutral
601	110-3054	1	Cam-Trunnion
606	100-1270	1	Switch-Proximity
608	33114-030	1	Screw-HH
611	110-3060	1	Screw-HSH
612	33013-00	1	Nut-Hex
613	110-3061	2	Screw-HSH
615	48-7850	4	Capscrew
602A	251-259	1	Bearing-Ball
602B	110-3056	2	Ring-Retaining
603A	110-3058	1	Fitting-Lube

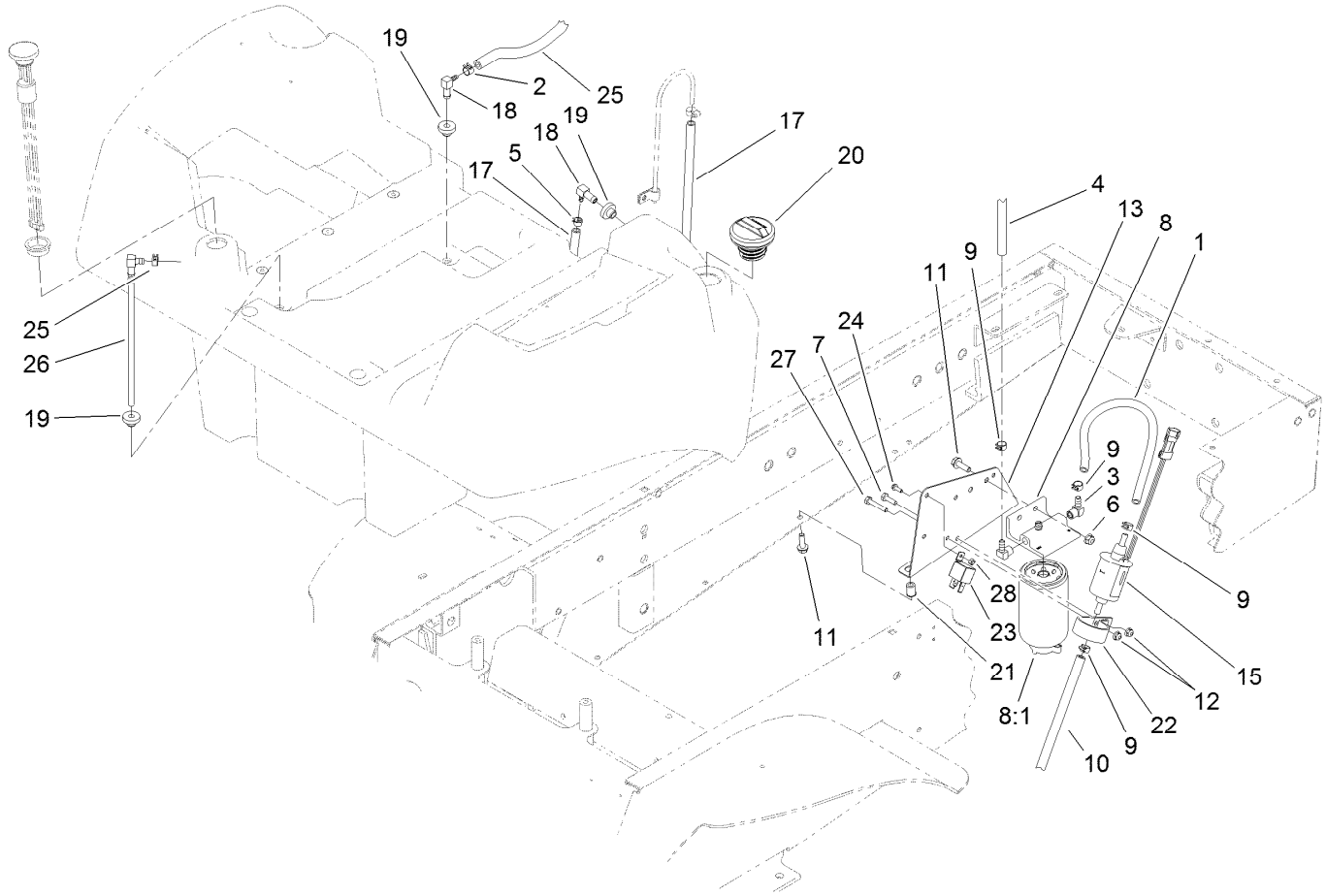

Fuel Delivery System Assembly

Ref.	Part Number	Qty.	Description
1	110-4105	1	Hose-Fuel
2	2412-80	2	Clamp-Line, Fuel
3	353-781	2	Fitting-Elbow
4	106-1126	1	Hose-Fuel
5	2412-98	1	Clamp
6	104-8300	2	Nut-Flange, NI
7	321-5	1	Screw-HH
8	110-9044	1	Filter-Seperator
8:1	110-9049	1	Filter-Spin On
9	92-2379	6	Clamp-Hose
10	110-4172	1	Hose-Fuel
11	3234-17	4	Screw-HHF
12	104-7201	2	Nut-HF
13	114-2854-03	1	Bracket-Support

Ref.	Part Number	Qty.	Description
15	110-8806	1	Pump-Fuel
17	109-0273	1	Hose-Fuel
18	104-5228	2	Fitting-Elbow, 90 DEG
19	46-6560	3	Bushing
20	115-5305	1	Cap-Fuel
21	32148-7	2	Nut-Insert
22	110-8817	1	Bracket-Pump, Fuel
23	99-7435	1	Relay-Power
24	32105-23	1	Screw
25	108-9698	1	Hose-Fuel
26	110-9689	1	Pipe-Stand
27	321-9	1	Screw-HH
28	3296-2	1	Nut-Lock, NI

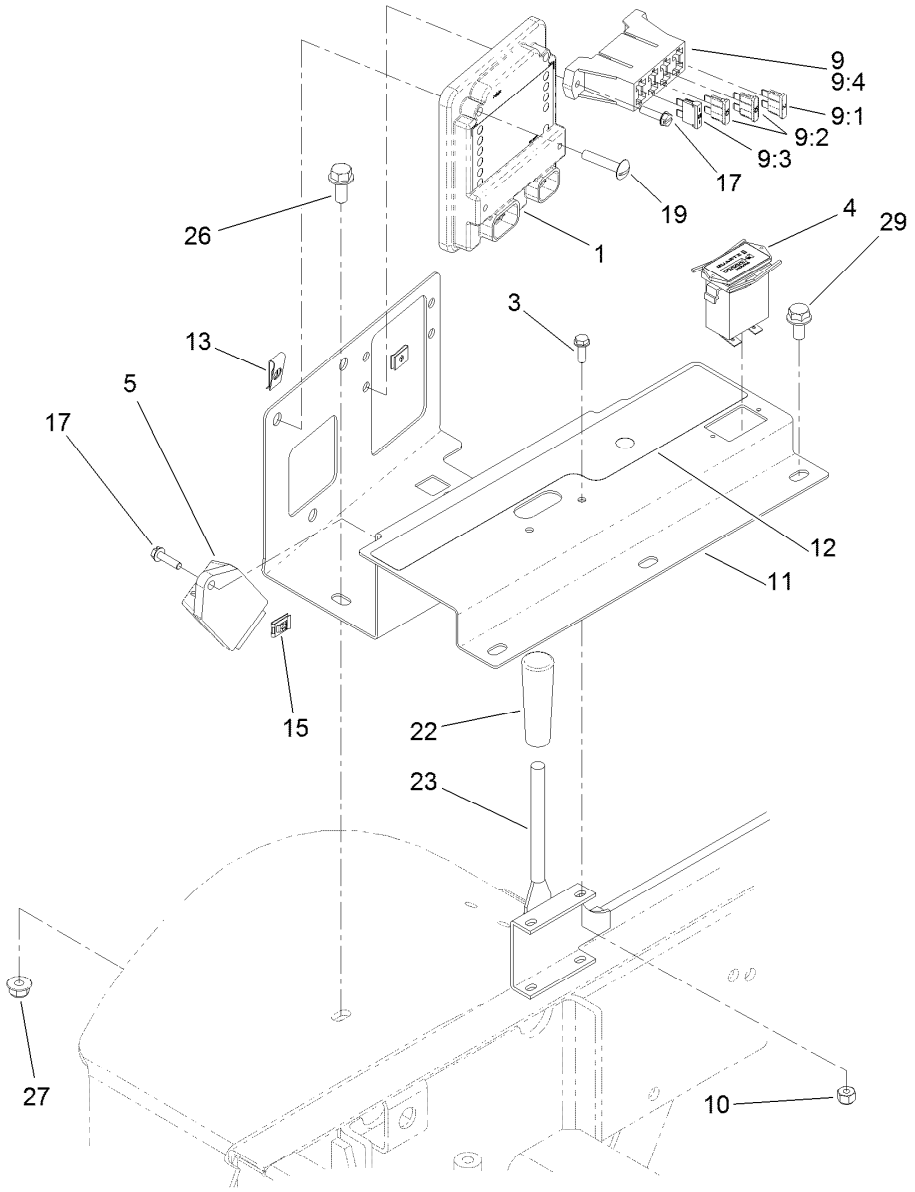

Lower Control Panel Assembly

Ref.	Part Number	Qty.	Description
1	106-9277	1	Module-Control, Standard
3	115-1727	2	Screw-HHF
4	1-513374	1	Meter-Hour
5	98-7611	1	Controller-Glow
9	119-5772	1	Harness-Wire
9:1	94-6710	1	Fuse-2 Amp
9:2	218-578	2	Fuse-Blade, 10 Amp
9:3	109355	1	Fuse-Blade, 15 Amp
9:4	32160-005	1	Connector-Fuseblock, 8F
10	1-804254	2	Nut-Lock, HH
11	119-4831-03	1	Console

Ref.	Part Number	Qty.	Description
12	119-4832	1	Decal-Panel, Lower
13	3290-199	3	Nut-Speed
15	107-1013	8	Nut-Speed, U-Type
17	32105-13	3	Screw-HWH
19	3258-19	3	Screw
22	233-39	1	Knob-Control
23	117-0824	1	Control-Throttle, Diesel
26	3234-5	1	Screw-HHF
27	104-8300	1	Nut-Flange, NI
29	3234-14	3	Screw-HHF

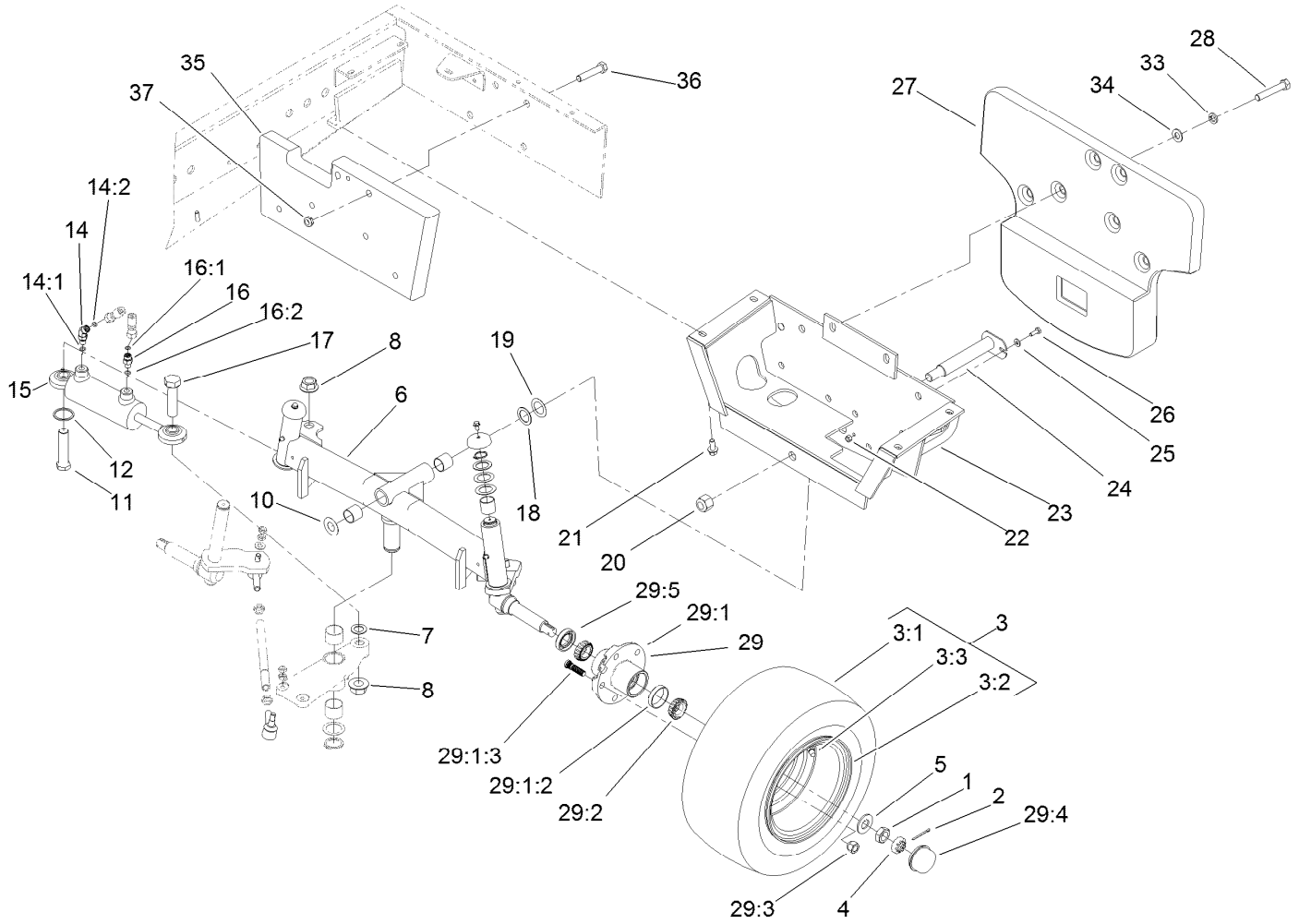

Rear Axle and Tire Assembly

Ref.	Part Number	Qty.	Description
1	3220-7	2	Nut-Jam
2	3272-13	2	Pin-Cotter
3		2	Wheel And Tire ASM ●
3:1	231-105	1	Tire-Ribbed
3:2	107-9059	1	Wheel
3:3	232-35	1	Valve Stem And Cap ASM
4	93-0307	2	Nut-Lock, Retainer
5	93-0309	2	Washer-Tab
6		1	Rear Axle ASM ●
7	67-9410	1	Washer
8	32128-45	2	Locknut-Flange
10	71-4540	1	Washer-Thrust
11	67-7300	1	Screw-HH
12	67-7250	1	Spacer-Ring
14	340-103	1	Fitting-HYD, 45 DEG
14:1	237-78	1	O-Ring
14:2	237-21	1	O-Ring
15	115-4525	1	Cylinder ASM
16	340-92	1	Fitting-HYD, Straight

Ref.	Part Number	Qty.	Description
16:1	237-78	1	O-Ring
16:2	237-21	1	O-Ring
17	328-25	1	Screw-HH
18	10-8110	1	Washer-Thrust
19	56-2460	2	Washer-Flat
20	3296-51	1	Nut-Lock, NI
21	3234-25	4	Screw-HHF
22	3296-42	1	Nut-Lock, NI
23	63-6430-03	1	Frame-Rear
24	63-6770-03	1	Pin-Masked
25	3256-22	1	Washer-Flat
26	321-4	1	Screw-HH
27	110-9666-01	1	Weight-Rear
28	325-14	4	Screw-HH
29		2	Hub ASM ●
29:1	117-8963	1	Hub ASM
29:1:2	254-72	2	Bearing-Cup, Tapered
29:1:3	114-3918	5	Stud-Wheel
29:2	254-94	2	Bearing-Cone, Tapered

● Not serviced separately

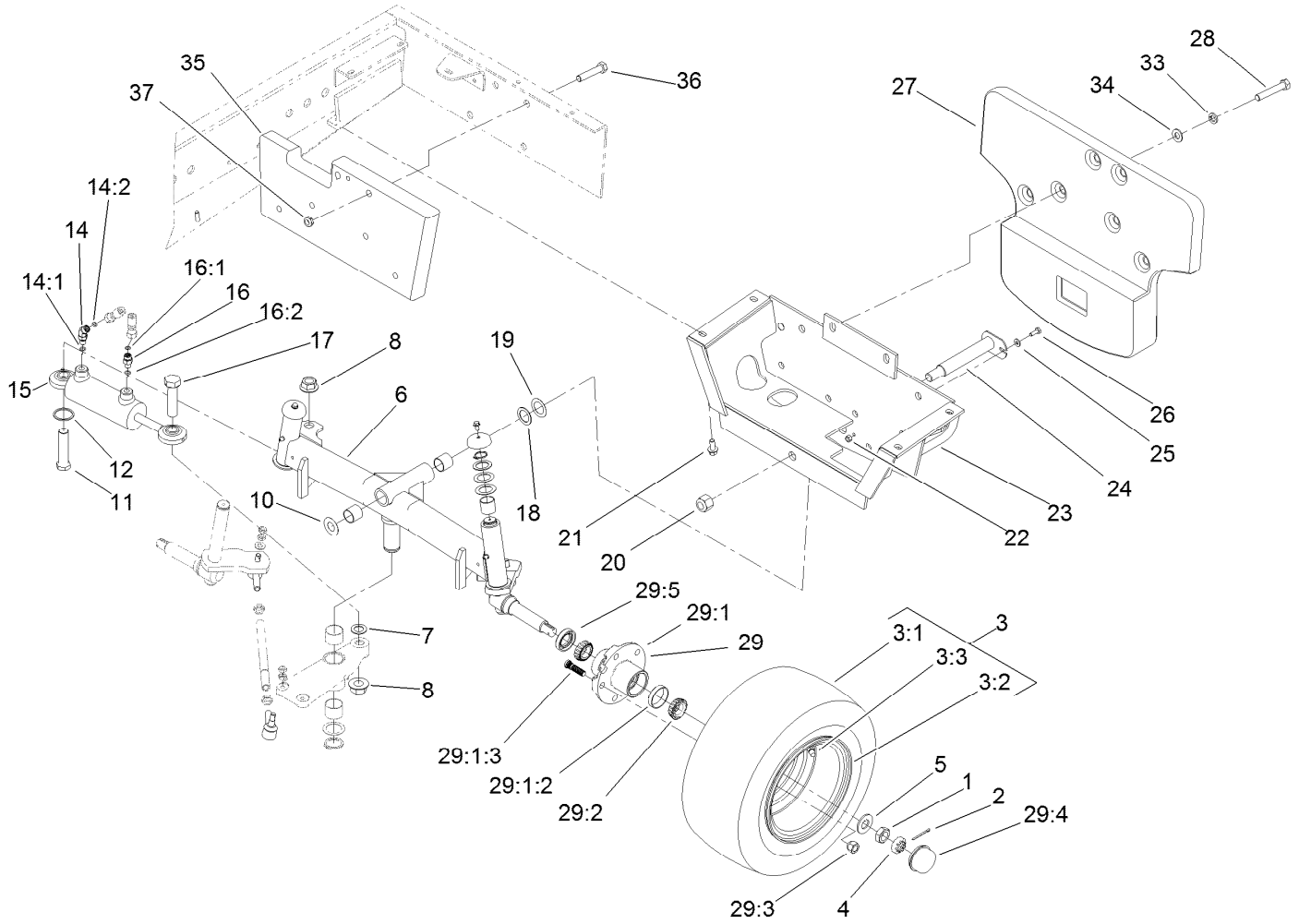

Rear Axle and Tire Assembly (continued)

Ref.	Part Number	Qty.	Description
29:3	242-50	5	Nut-Lug
29:4	241-119	1	Cap-Dust
29:5	112-1690	1	Seal-Oil
33	3253-7	4	Washer-Lock

Ref.	Part Number	Qty.	Description
34	3256-26	4	Washer-Flat
35	110-1995-03	1	Weight-Rear, Inside
36	325-10	2	Screw-HH
37	3296-45	2	Nut-Lock, NI

● Not serviced separately

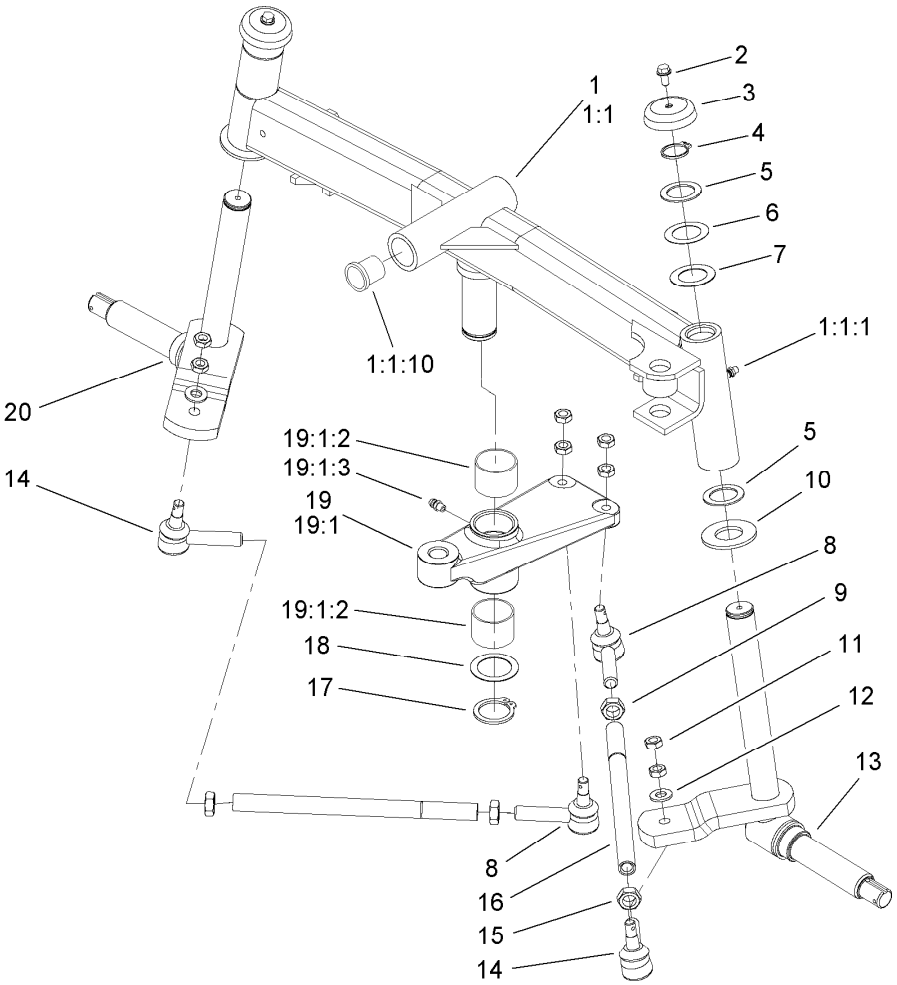

Rear Axle Assembly

Ref.	Part Number	Qty.	Description
1	76-3000-03	1	Rear Axle ASM
1:1		1	Axle-Rear ●
1:1:1	302-5	3	Fitting-Grease
1:1:10	67-1750	6	Bushing
2	3234-13	2	Screw-HHF
3	66-2990-03	2	Cap-Spindle
4	32151-36	2	Ring-Retaining
5	10-8110	4	Washer-Thrust
6	56-2460	2	Washer-Flat
7	5-1226	2	Washer
8	110-9686-03	2	LH Ball Joint ASM
9	3220-12	2	Nut-HJ (LH Thread)
10	256-121	2	Washer-Thrust

Ref.	Part Number	Qty.	Description
11	3220-3	8	Nut-HJ
12	3256-24	2	Washer-Flat
13	107-2943-03	1	RH Spindle ASM
14	110-9685-03	2	RH Ball Joint ASM
15	3220-5	2	Nut-Jam
16	63-6880	2	Tie Rod-Steering
17	32151-77	1	Ring-Retaining, EXT
18	76-2980	1	Washer-Thrust
19	100-6598-03	1	Steering Pivot ASM
19:1		1	Pivot-Steering ●
19:1:2	76-2970	2	Bushing-Straight
19:1:3	302-5	1	Fitting-Grease
20	107-2942-03	1	LH Spindle ASM

● Not serviced separately

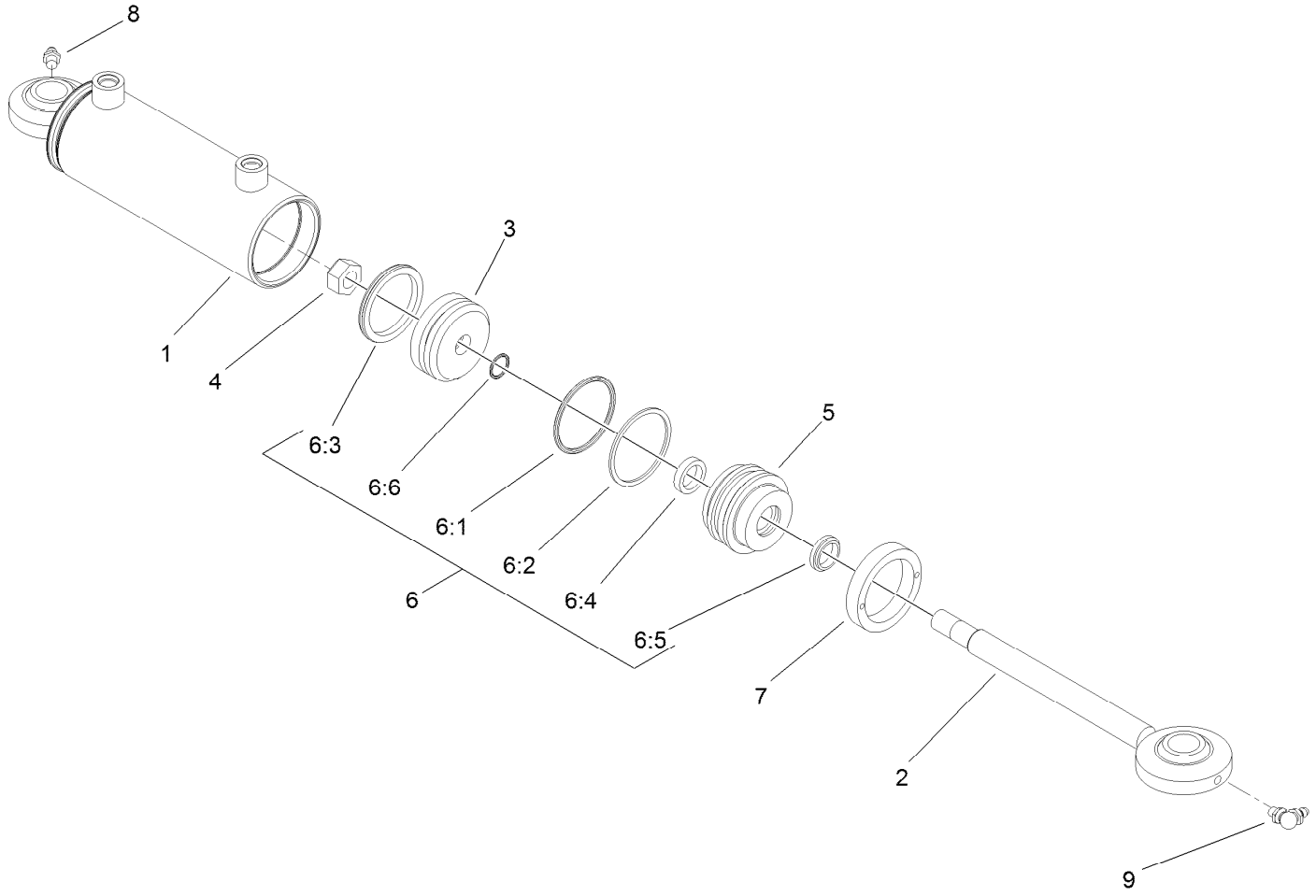

Steering Cylinder Assembly No. 115-4525

Ref.	Part Number	Qty.	Description
1		1	Barrel Assembly ●
2		1	Shaft Assembly ●
3		1	Piston ●
4		1	Nut-Lock ●
5		1	Head ●
6	115-4526	1	Seal Kit
6:1		1	O-Ring ●
6:2		1	Backup ●
6:3		1	Bp Seal ●
6:4		1	Bs-Seal ●
6:5		1	Dust Seal - Dt ●
6:6		1	O-Ring ●
7		1	Collar-Internal ●
8	302-5	1	Fitting-Grease
9	302-40	1	Fitting-Grease

● Not serviced separately

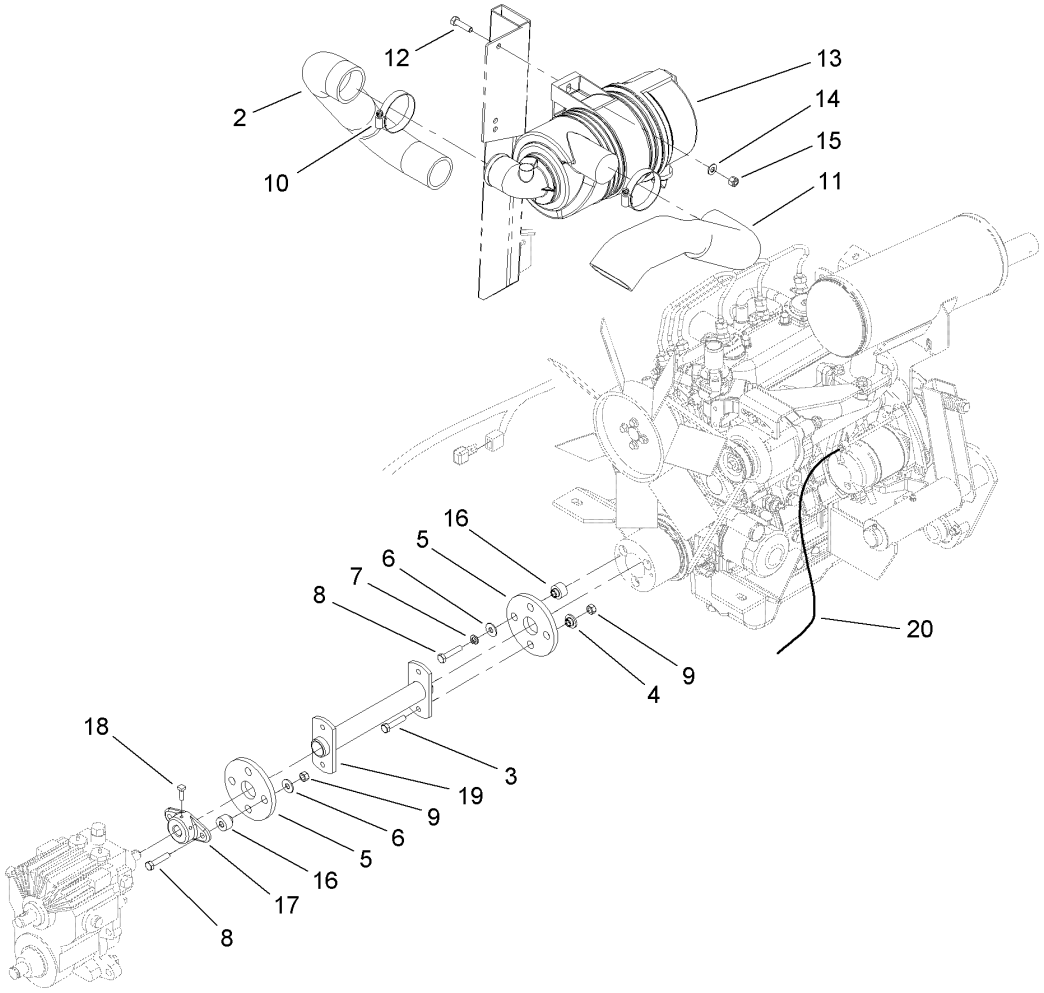

Air Cleaner and Drive Coupling Assembly

Ref.	Part Number	Qty.	Description
2	104-3446	1	Hose-Outlet, Air
3	3210-5	4	Screw-HH
4	27-6600	4	Spacer-Coupling
5	115-4523	2	Coupling-Rubber
6	3256-71	4	Washer-Flat
7	3253-4	2	Washer-Lock
8	3210-8	4	Screw-HH
9	32152-5	6	Nut-Hex
10	2412-42	3	Clamp-Hose
11	104-3444	1	Hose-Inlet, Air
12	322-6	2	Screw-HH
13	104-3427	1	Air Cleaner ASM
14	3256-23	2	Washer-Flat
15	3296-29	2	Nut-Lock, NI
16	27-6590	4	Spacer-Coupling, Rubber
17	27-4370	1	Hub-Pump
18	3241-6	2	Screw-SQH
19	104-3401-03	1	Drive Shaft ASM
20	99-3441	1	Harness-Wire, Fusible Link

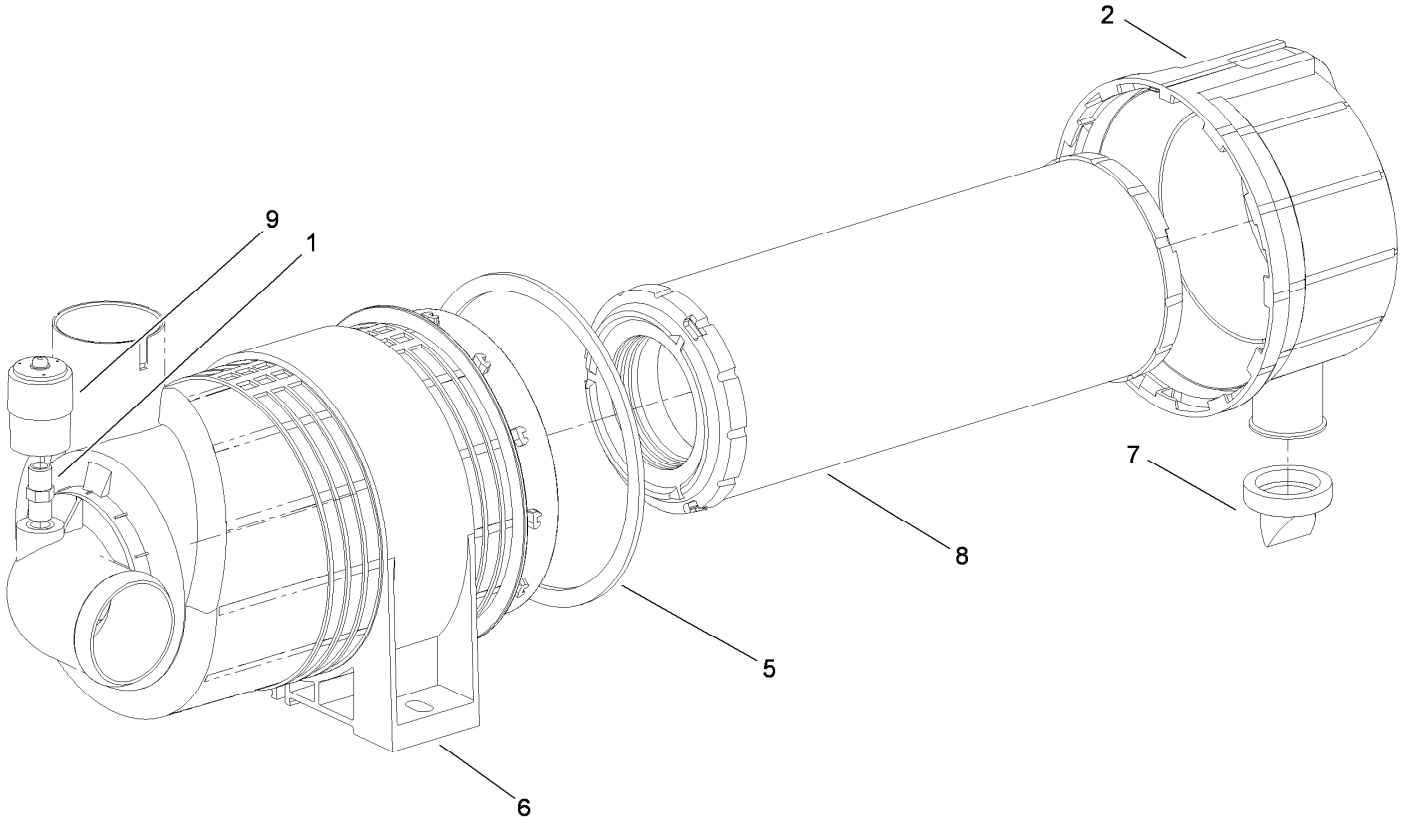

Air Cleaner Assembly No. 104-3427

Ref.	*Part Number*	*Qty.*	*Description*
1	105-4292	1	Nipple-Pipe
2	104-0497	1	Cover ASM
5	104-4897	1	Gasket
6	98-4525	1	Bracket-Cleaner, Air
7	104-0498	1	Valve-Vacuator
8	108-3810	1	Filter-Air
9	93-9164	1	Indicator-Mini

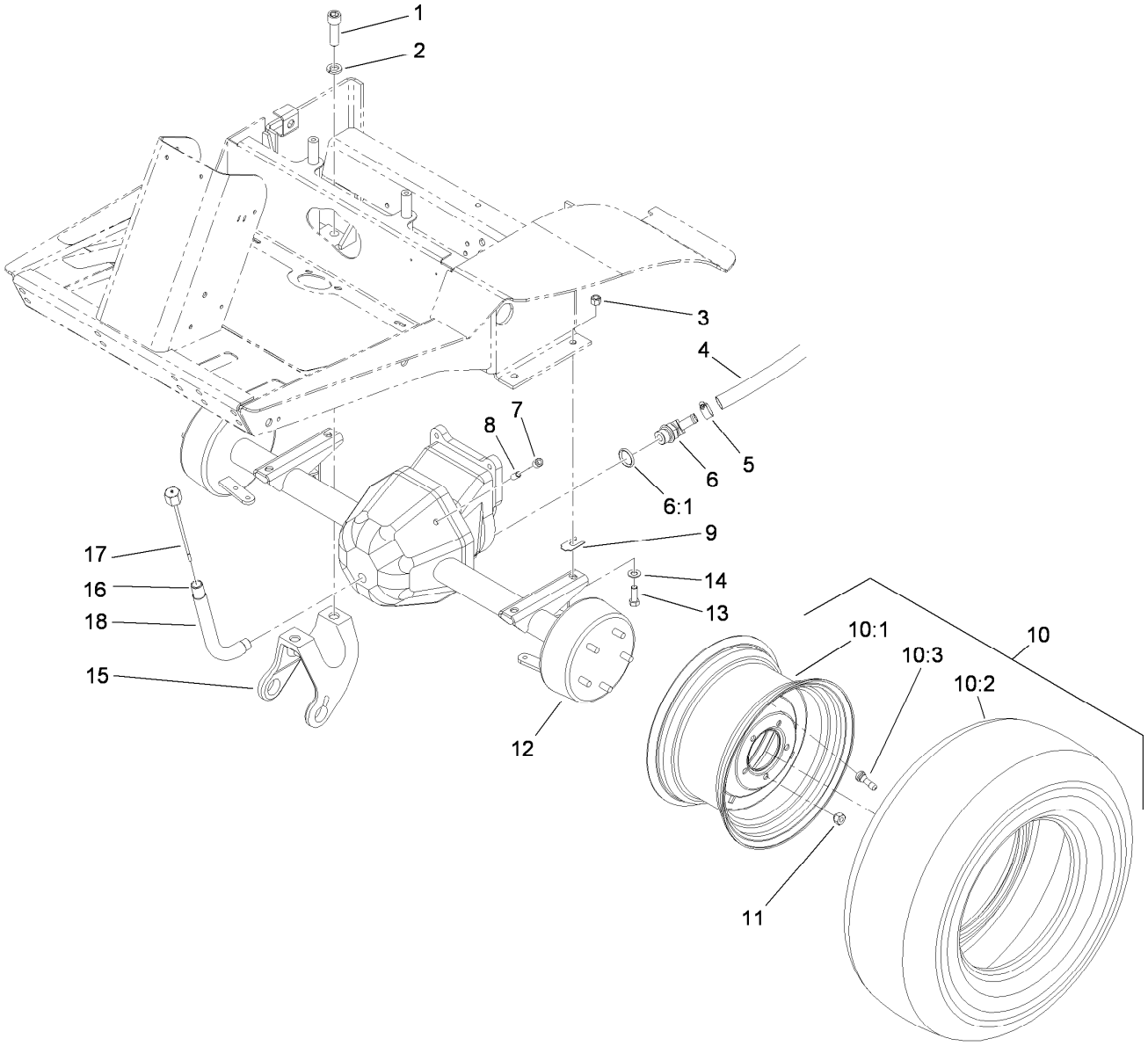

Front Axle Assembly

Ref.	Part Number	Qty.	Description
1	3273-38	4	Screw-HSH
2	3253-8	4	Washer-Lock
3	3296-48	4	Nut-Lock, NI
4	92-5083	1	Hose-HYD
5	2412-119	1	Clamp-Hose, Worm Drive
6	92-5088	1	Fitting-Elbow, 45 DEG
6:1	237-81	1	O-Ring
7	2810-1	1	Coupling-Pipe
8	289-6	1	Nipple-Pipe
9	42-6080	1	Shim-Axle
10		2	Wheel And Tire ASM ●

Ref.	Part Number	Qty.	Description
10:1	117-0822	1	Wheel
10:2	117-0823	1	Tire-Standard
10:3	232-27	1	Stem-Valve
11	242-50	10	Nut-Lug
12	108-6599-03	1	Axle ASM
13	324-5	4	Screw-HH
14	3256-25	4	Washer-Flat
15	110-9678	2	Bracket-Carrier
16	105-7169	1	Tube-Fill, Oil
17	105-7172	1	Dipstick ASM
18	110-5651	1	Sleeve-Protective

● Not serviced separately

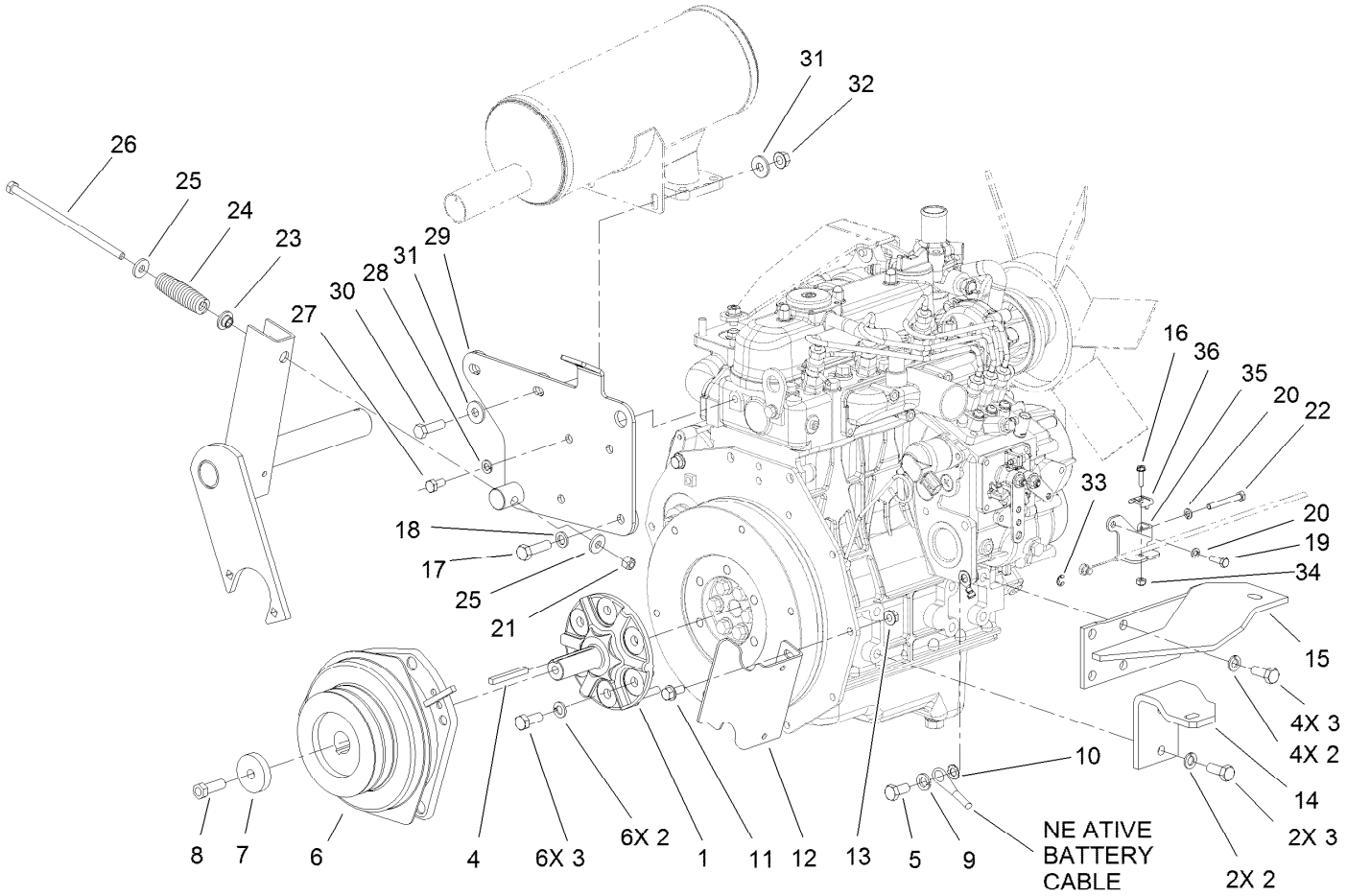

Engine Mounting and Clutch Assembly

Ref.	Part Number	Qty.	Description
1	104-1715	1	Hub-Clutch
2	42-9600	12	Washer-Lock, Spring
3	43-0090	12	Screw-HH
4	63-8150	1	Key-Square
5	63-7790	1	Screw-Cap
6	107-9061	1	Electric Clutch / Brake ASM
7	105-3698	1	Spacer
8	3212-5	1	Screw-HH
9	3253-6	1	Washer-Lock
10	3255-9	1	Washer-Lock
11	3234-5	2	Screw-HHF
12	120-6568-03	1	Stop-Clutch
13	32128-25	2	Nut-HF
14	104-1713-03	1	Mount-Engine, RH Rear
15	117-0836-03	1	RH Front Engine Mount ASM
16	32105-13	1	Screw-HWH
17	56-2140	2	Screw-HH
18	48-9590	2	Washer-Lock

Ref.	Part Number	Qty.	Description
19	48-7630	1	Screw
20	48-8020	2	Washer-Spring
21	3296-29	1	Nut-Lock, NI
22	33113-050	1	Screw-HH
23	27-6600	1	Spacer-Coupling
24	21-0400-01	1	Spring-Compression
25	4-2390	2	Washer-Flat
26	110-9696	1	Bolt-HH
27	33114-016	2	Screw-HH
28	3253-4	2	Washer-Lock
29	108-6561-03	1	Muffler Mount ASM
30	323-44	2	Screw-HH
31	80-6990	4	Washer-Hardened
32	32128-21	2	Nut-HF
33	701197	1	E-Ring
34	3296-2	1	Nut-Lock, NI
35	110-9682-03	1	Bracket-Throttle
36	81-1690	1	Clamp-Cable

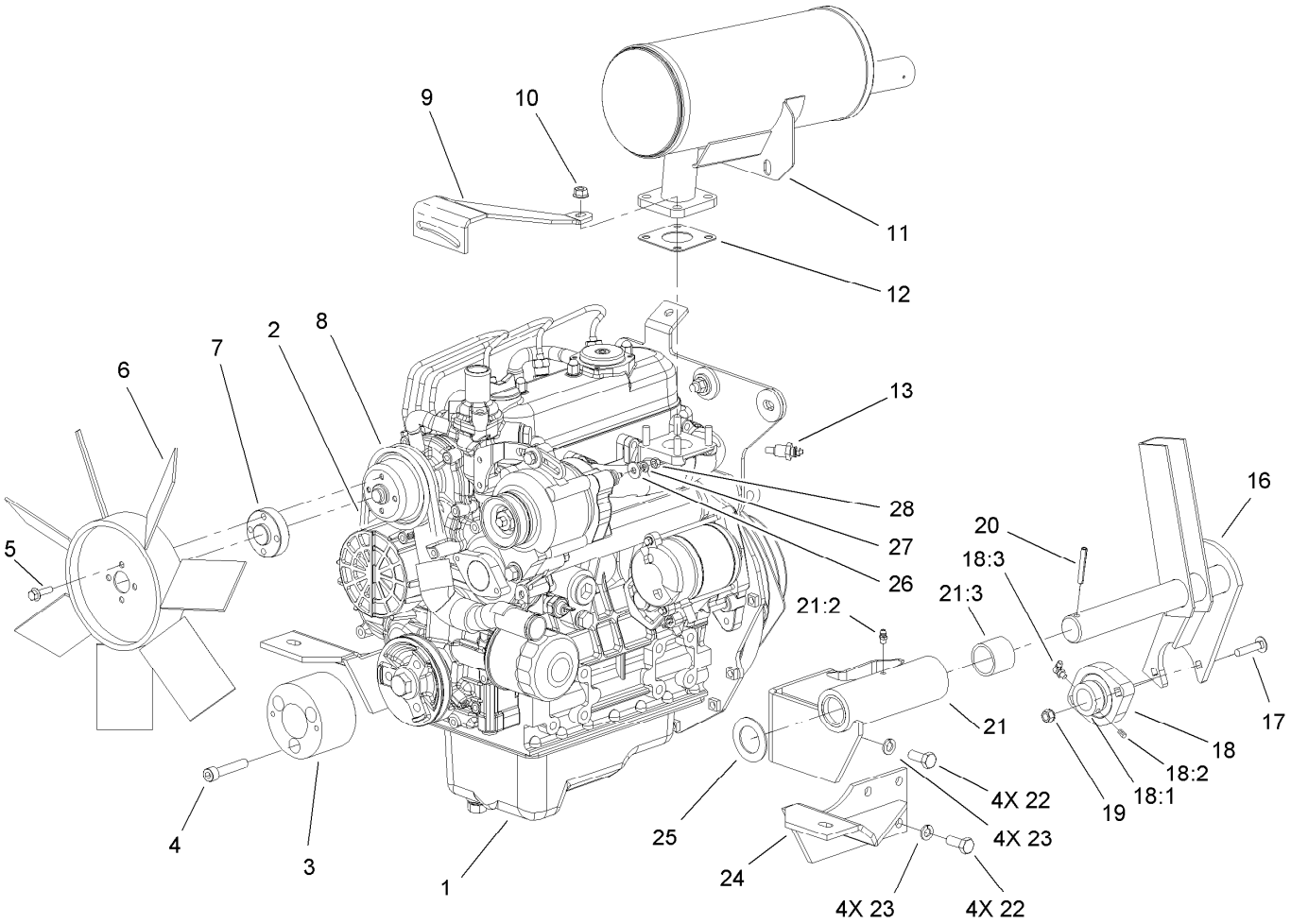

Engine, Fan and Muffler Assembly

Ref.	Part Number	Qty.	Description
1	114-2890	1	Engine ASM
2	104-3494	1	Belt-V
3	104-1723	1	Adapter-Front Drive
4	3274-106	3	Screw-HSH
5	33103-020	4	Screw-HHF
6	104-4246	1	Fan-Engine
7	104-4247	1	Spacer-Fan
8	104-3497	1	Pulley-Fan
9	105-2556-03	1	Brace-Alternator, Upper
10	33004-00	4	Nut-HF
11	108-1363	1	Muffler-Exhaust
12	98-9611	1	Gasket
13	108-8682	1	Thermoswitch
16	106-4381-03	1	PTO Tension Shaft ASM
17	3230-4	2	Screw-CARR
18	92-8799	1	Bearing-Flange

Ref.	Part Number	Qty.	Description
18:1	251-77	1	Collar-Lock, Bearing
18:2	3245-35	1	Screw-Set, HSH
18:3	302-40	1	Fitting-Grease
19	32149-1	2	Nut-Keps
20	32121-32	1	Pin-Roll
21	117-0841	1	LH Rear Engine Mount ASM
21:2	302-5	1	Fitting-Grease
21:3	256-299	2	Bushing-Straight
22	43-0090	8	Screw-HH
23	42-9600	8	Washer-Lock, Spring
24	117-0831-03	1	LH Front Engine Mount ASM
25	3-4324	1	Washer-Flat
26	3256-22	1	Washer-Flat
27	43-5930	1	Washer-Lock, Spring
28	33013-00	1	Nut-Hex

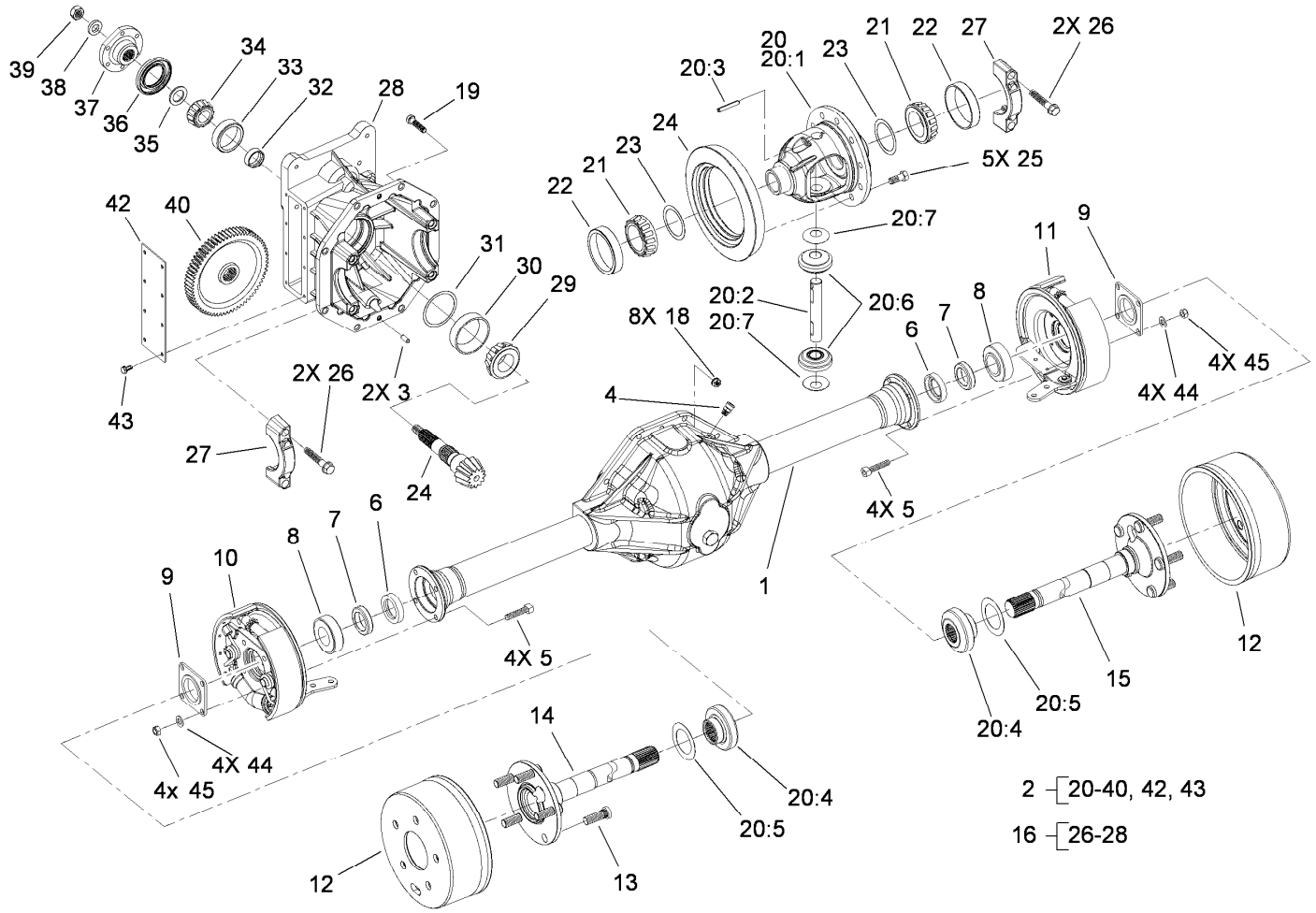

Front Axle Assembly No. 108-6599-03

Ref.	Part Number	Qty.	Description
1	110-9670	1	Lower Housing ASM
2	92-4907	1	Differential Carrier ASM
3	21-8270	2	Pin-Dowel
4	72-9420	1	Vent
5	94-6934	8	Screw-HH
6	24-8840	2	Ring-Retaining, Wheel Bearing
7	99-6969	2	Seal-Oil, Wheel End
8	21-8180	2	Bearing ASM
9	28-0670	2	Seal-Grease
10		1	Brake ASM, RH ●
11		1	Brake ASM, LH ●
12	110-3072	2	Drum-Brake
13	106-9205	10	Stud-Wheel
14	110-3073	1	Shaft-Axle, RH
15	110-3074	1	Shaft-Axle, LH
16	110-3076	1	Carrier ASM
18	32149-5	8	Nut-Keps
19	3210-8	8	Screw-HH
20	110-4136	1	Differential Case ASM
20:1	21-7670	1	Case-Differential
20:2	21-7700	1	Shaft-Mate, Pinion
20:3	42150	1	Pin-Lock, Pinion
20:4	110-3078	2	Gear-Differential
20:5	110-3077	2	Washer-Thrust
20:6	110-3079	2	Pinion-Differential

● Not serviced separately

Ref.	Part Number	Qty.	Description
20:7	21-7730	2	Washer-Thrust, Pinion
21	254-65	2	Bearing-Roller, Cone
22	254-66	2	Cup-Bearing, Roller
23	21-8090	1	Shim-Bearing, Differential (.003)
23	21-8100	1	Shim-Bearing, Differential (.005)
23	21-8110	1	Shim-Bearing, Differential (.010)
23	21-8120	1	Shim-Bearing, Differential (.030)
24	92-1676	1	Gear And Pinion ASM
25	21-7770	5	Screw-Gear, Drive
26	92-1773	4	Screw-HHF
27		1	Cap-Bearing ●
28		1	Housing ●
29	43-6760	1	Bearing-Roller, Cone Taper
30	43-6750	1	Bearing-Taper, Cup
31	43-6713	1	Shim-Pinion (.030)
31	43-6712	1	Shim-Pinion (.010)
31	43-6711	1	Shim-Pinion (.005)
31	43-6710	1	Shim-Pinion (.003)
32	21-8020	1	Spacer-Bearing
33	254-90	1	Bearing-Cup
34	254-91	1	Cone-Bearing
35	72-3588	1	Shim-Bearing, Front (.131)

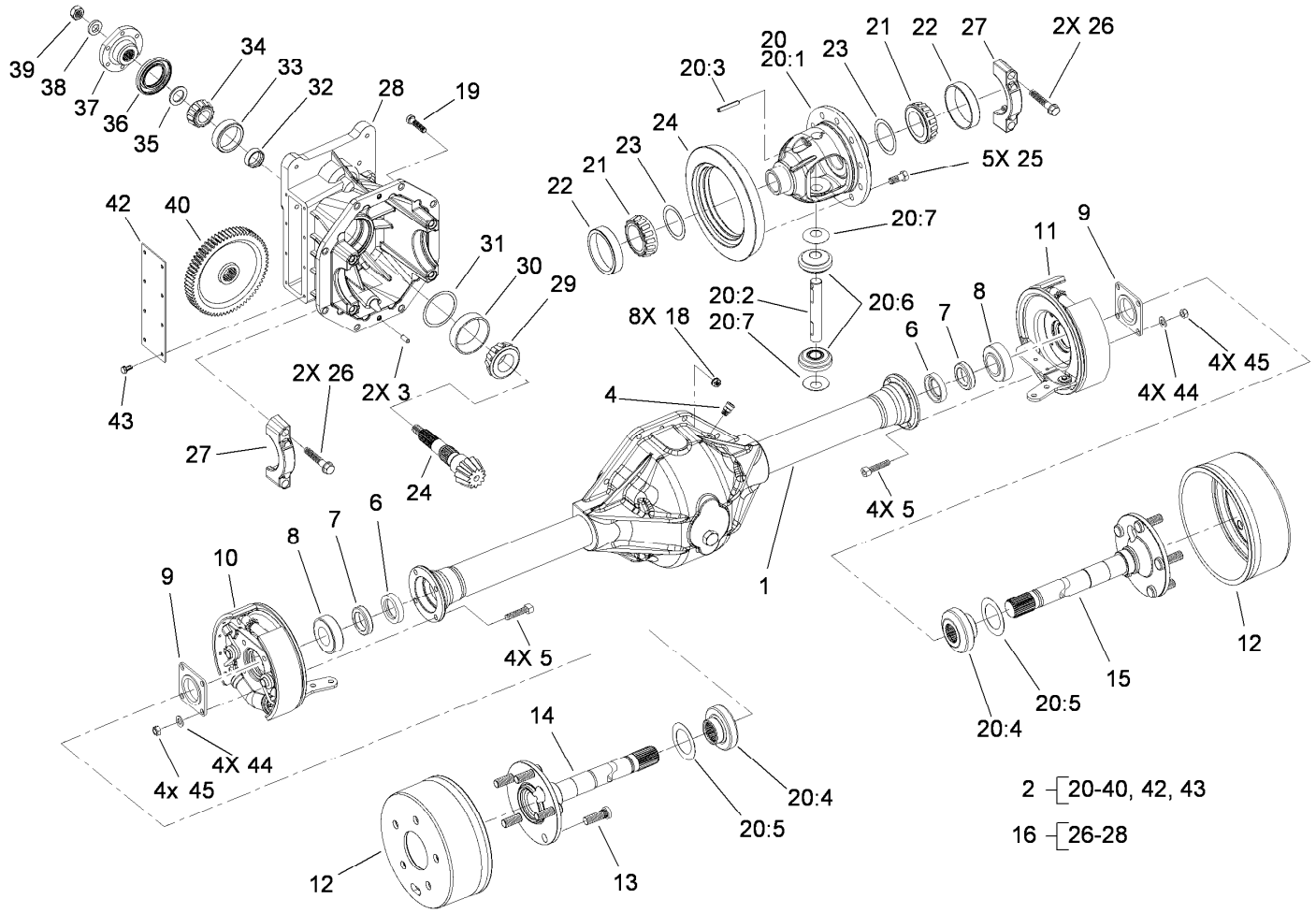

Front Axle Assembly No. 108-6599-03 (continued)

Ref.	Part Number	Qty.	Description
35	72-3590	1	Shim-Bearing, Front (.133)
35	72-3587	1	Shim-Bearing, Front (.129)
35	72-3594	1	Shim-Bearing, Front (.141)
35	72-3595	1	Shim-Bearing, Front (.143)
35	72-3596	1	Shim-Bearing, Front (.145)
35	72-3597	1	Shim-Bearing, Front (.147)
35	72-3598	1	Shim-Bearing, Front (.149)
35	72-3600	1	Shim-Bearing, Front (.151)
35	72-3578	1	Shim-Bearing, Front (.110)
35	72-3580	1	Shim-Bearing, Front (.112)
35	72-3577	1	Shim-Bearing, Front (.108)
35	72-3576	1	Shim-Bearing, Front (.106)
35	72-3575	1	Shim-Bearing, Front (.104)
35	72-3574	1	Shim-Bearing, Front (.102)
35	72-3573	1	Shim-Bearing, Front (.100)
35	72-3572	1	Shim-Bearing, Front (.098)
35	72-3571	1	Shim-Bearing, Front (.096)
35	72-3570	1	Shim-Bearing, Front (.094)

Ref.	Part Number	Qty.	Description
35	72-3593	1	Shim-Bearing, Front (.139)
35	72-3592	1	Shim-Bearing, Front (.137)
35	72-3591	1	Shim-Bearing, Front (.135)
35	72-3581	1	Shim-Bearing, Front (.114)
35	72-3582	1	Shim-Bearing, Front (.116)
35	72-3583	1	Shim-Bearing, Front (.118)
35	72-3584	1	Shim-Bearing, Front (.120)
35	72-3585	1	Shim-Bearing, Front (.125)
35	72-3586	1	Shim-Bearing, Front (.127)
36	71-4330	1	Seal
37	68-7010	1	Flange
38	71-4340	1	Washer
39	71-4350	1	Nut
40	86-7230	1	Gear-Input, Transmission
42	21-7830	1	Cover-Gear
43	32144-112	8	Screw-HWH
44	94-6936	8	Washer-Hardened
45	94-6935	8	Locknut

● Not serviced separately

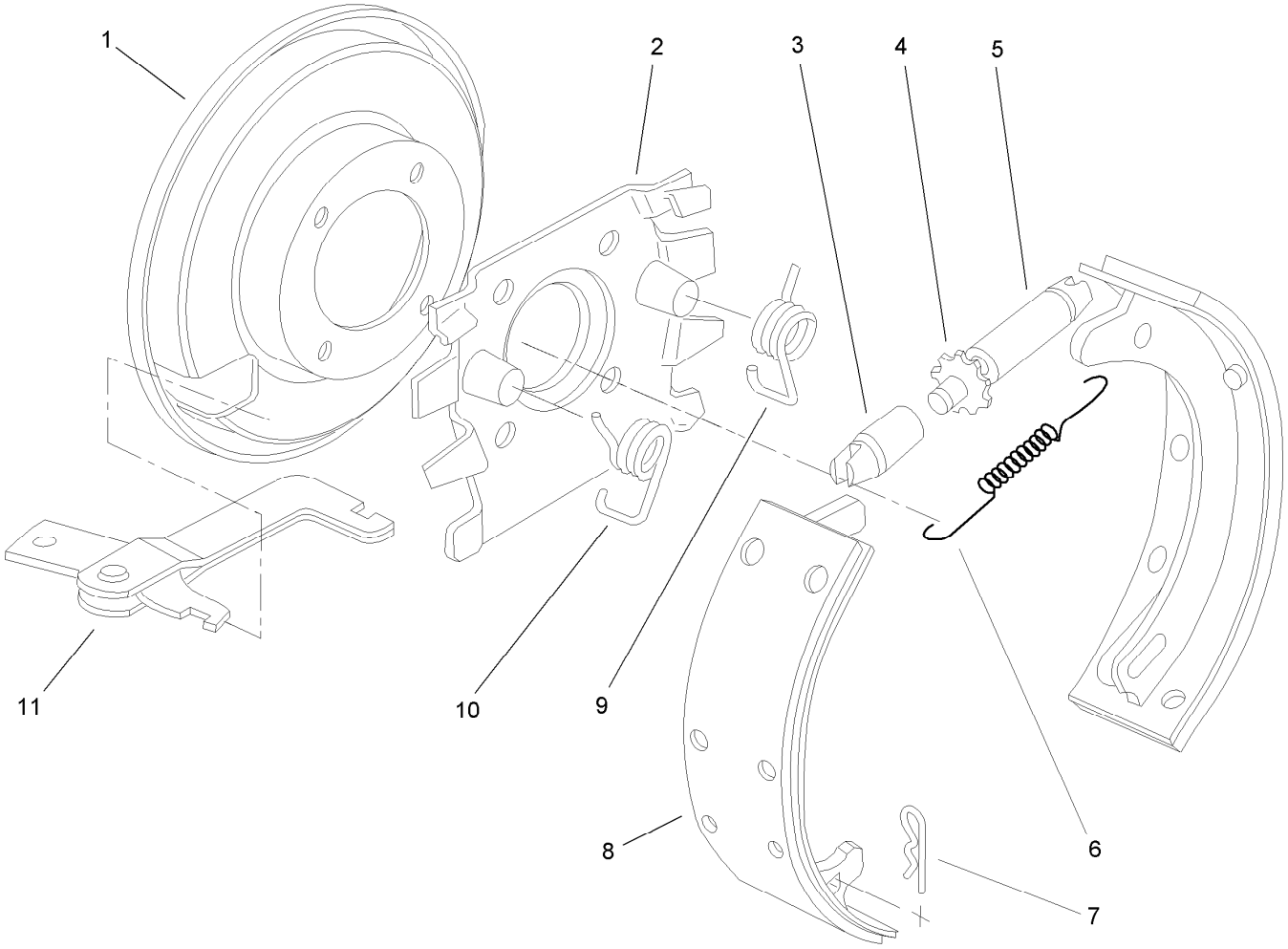

Right and Left Hand Brake Assembly

Ref.	*Part Number*	*Qty.*	*Description*
1	21-9450	1	Shield-Dust
2	43-6810	1	Spider-Torque
3	21-9390	1	Socket-Screw, Adjusting
4	21-9370	1	Screw-Adjusting
5	21-9380	1	Nut-Pivot
6	21-9440	1	Spring-Screw, Adjusting
7	21-9460	2	Retainer-Lever, Brake
8	84-8600	1	Set-Shoes, Lined
9	21-9430	1	Spring-Return, RH
10	21-9420	1	Spring-Return, LH
11	24-9180	1	Strut And Lever ASM
12	92-8775	1	Liquid Gasket Kit ●

● Not illustrated

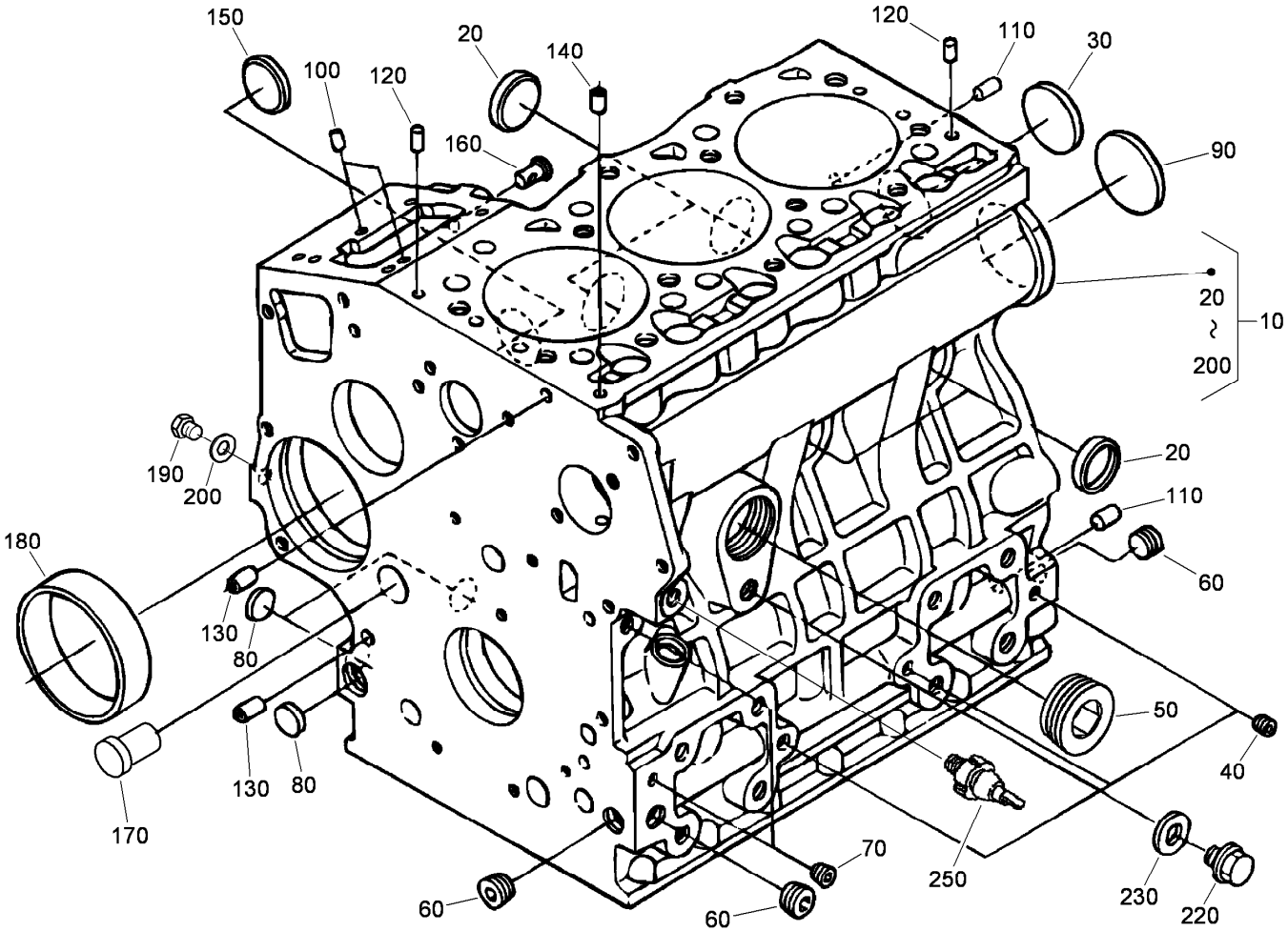

Crankcase Assembly

Ref.	Part Number	Qty.	Description
10	108-6571	1	Crankcase ASM
20	98-9398	4	Cap-Sealing
30	98-7539	1	Cap-Sealing
40	98-9687	3	Plug
50	105-3779	1	Plug
60	98-9597	3	Plug
70	98-7487	2	Plug
80	98-9379	3	Plug-Expansion
90	98-9668	1	Plug-Expansion
100	98-9375	2	Pin-Straight
110	98-9377	2	Pin-Straight
120	98-7504	2	Pin-Straight
130	98-9387	2	Pin-Pipe
140	98-9539	1	Pin-Pipe
150	98-9599	1	Plug
160	98-9630	1	Pin-Spring, Start
170	98-9675	1	Plug
180	98-9656	1	Bushing-Governor, Gear
190	98-7507	1	Plug
200	98-7428	1	Gasket
220	99-3447	1	Plug
230	106-7056	1	Gasket
250	98-9416	1	Switch-Oil

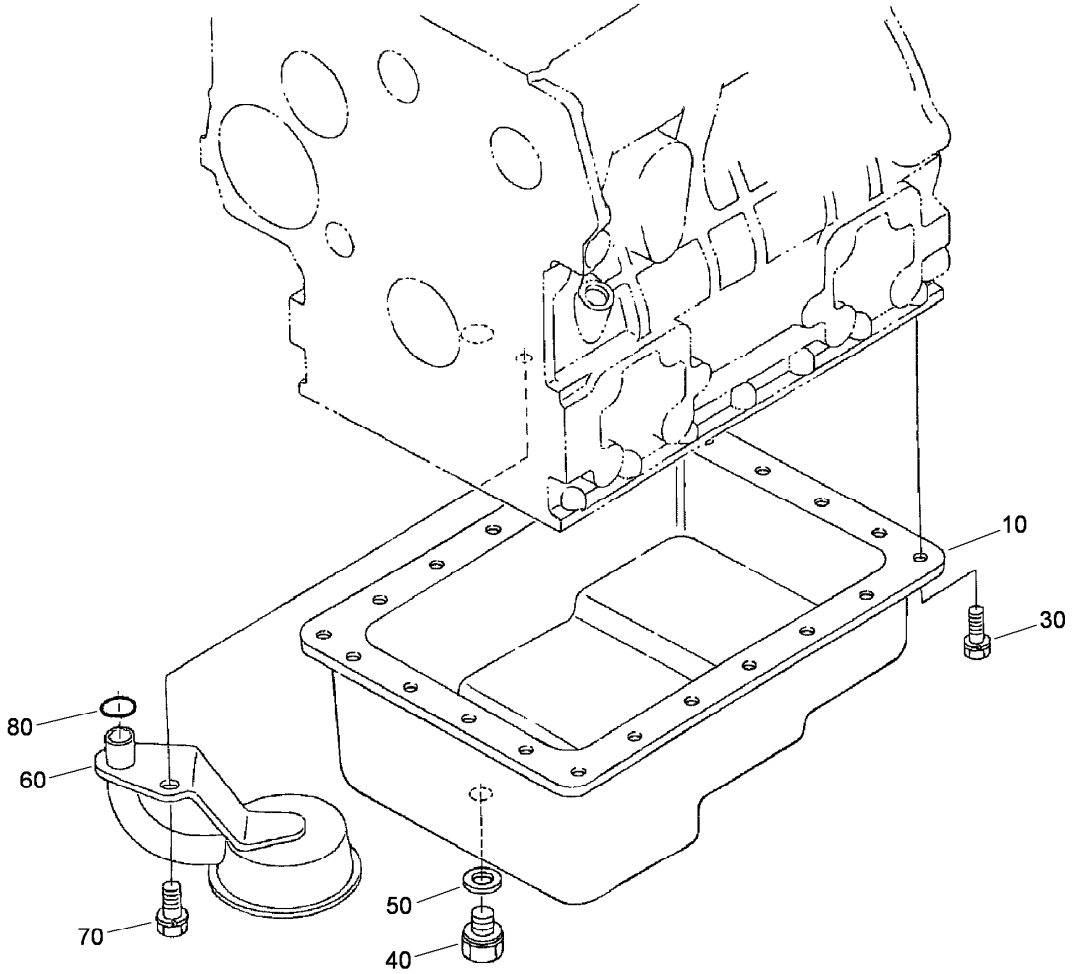

Oil Pan Assembly

Ref.	Part Number	Qty.	Description
10	104-3495	1	Pan-Oil
30	107-9065	22	Bolt
40	114-8151	1	Plug-Drain
50	98-7524	1	Gasket
60	104-3496	1	Filter-Pickup, Oil
70	98-7526	1	Bolt
80	105-3776	1	O-Ring

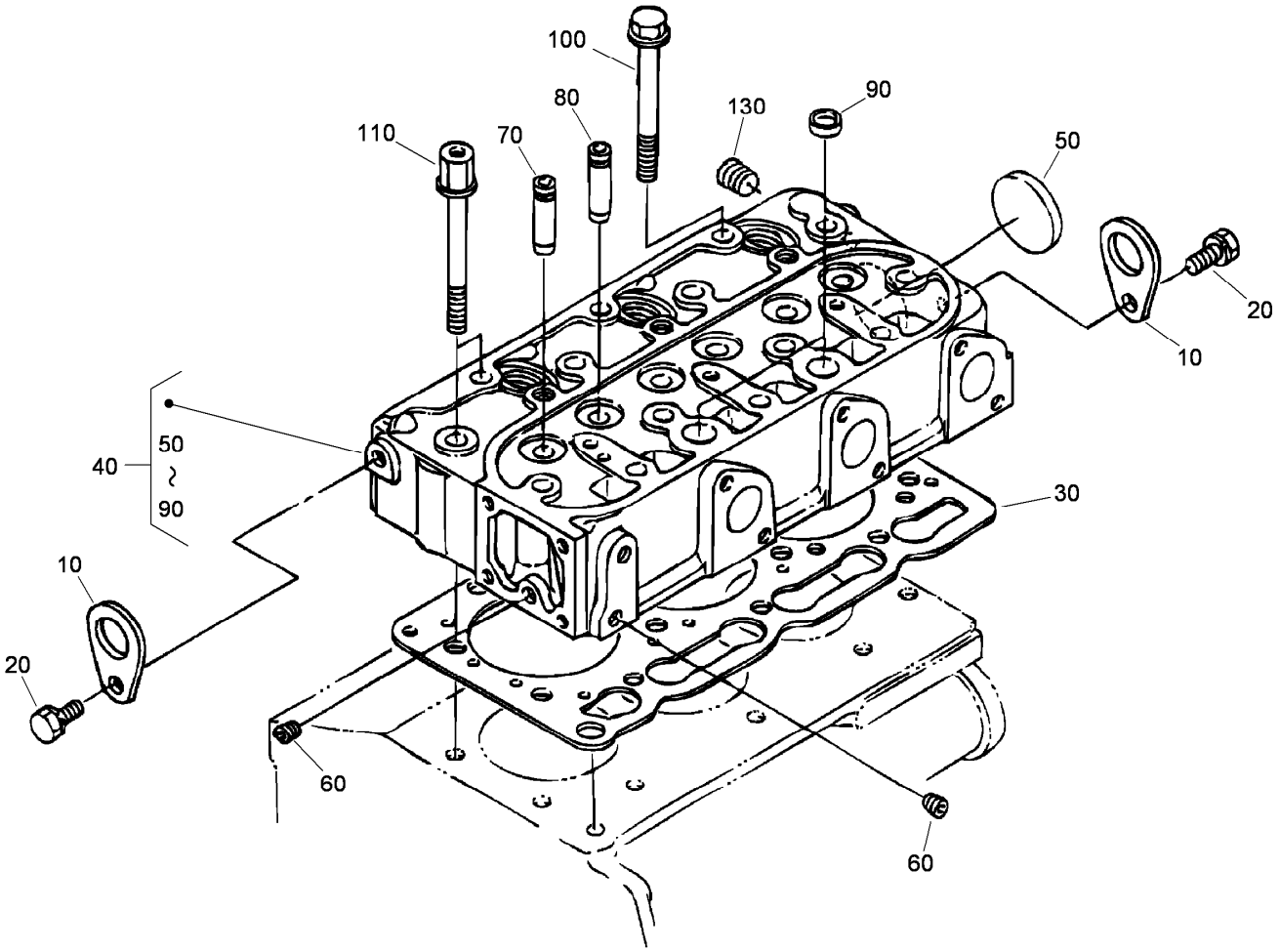

Cylinder Head Assembly

Ref.	*Part Number*	*Qty.*	*Description*
10	98-7531	2	Hook-Engine
20	100-9195	2	Bolt
30	108-6573	1	Gasket-Head, Cylinder
40	108-6574	1	*obs* Cylinder Head ASM
50	105-3705	1	Cap-Sealing
60	98-9687	2	Plug
70	107-9066	3	Guide-Valve, Inlet
80	107-9067	3	Guide-Valve, Exhaust
90	98-9389	2	Cap-Sealing
100	98-9479	1	Bolt-Head, Cylinder
110	98-9647	2	Bolt-Head, Cylinder
130	98-9444	1	Plug

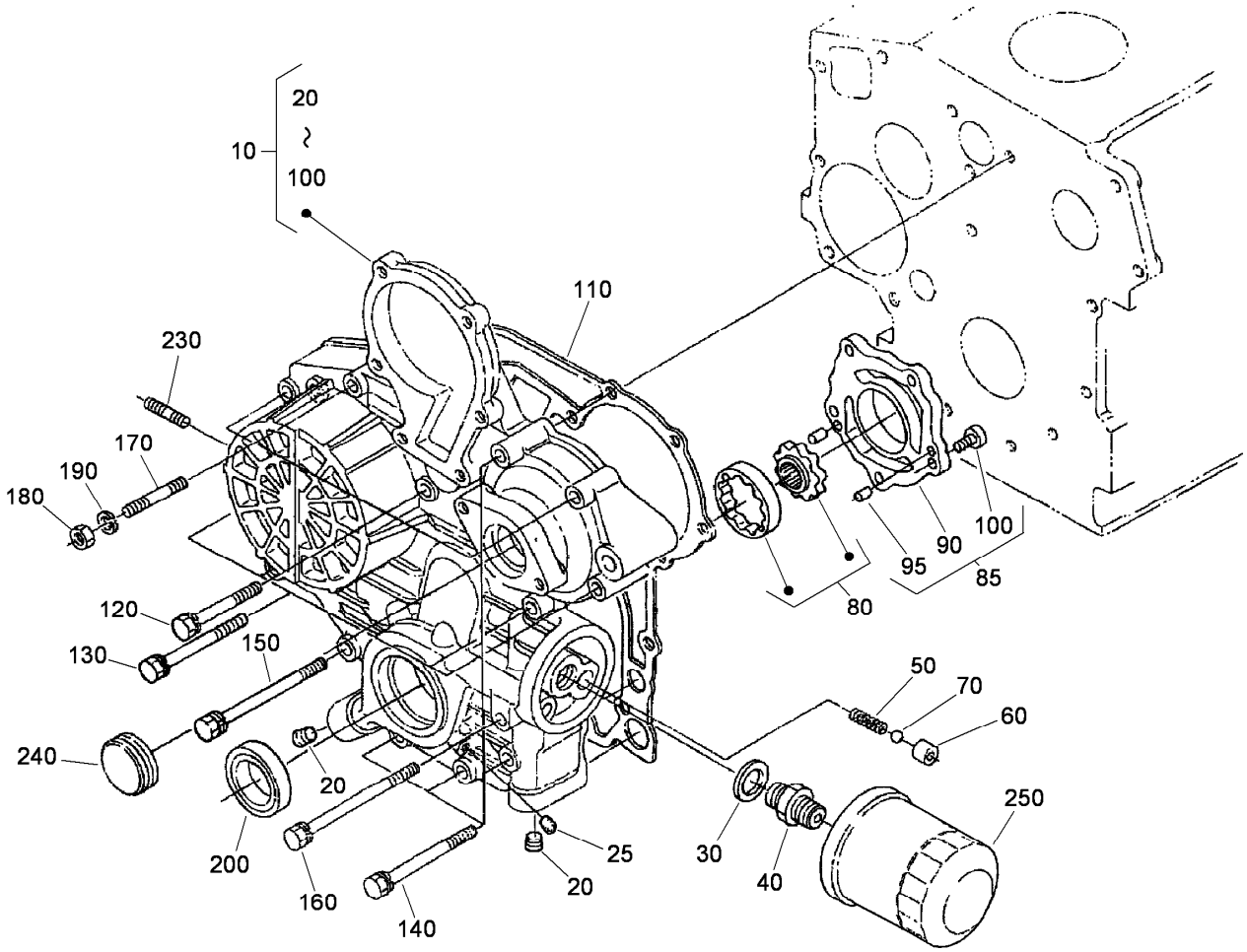

Gear Case Assembly

Ref.	Part Number	Qty.	Description
10	115-4105	1	Gear Case ASM
20	98-9598	2	Plug
25	98-7487	1	Plug
30	98-7562	1	Washer-Plain
40	98-9388	1	Joint-Pipe
50	98-9544	1	Spring
60	98-9543	1	Seat-Valve
70	98-9380	1	Ball
80	98-9540	1	Oil Pump Rotor ASM
85	115-4501	1	Pump Cover ASM
90	107-9069	1	Cover-Pump, Oil
95	107-9072	2	Pin-Straight
100	107-9071	5	Screw

Ref.	Part Number	Qty.	Description
110	98-9633	1	Gasket-Case, Gear
120	107-9073	3	Bolt
130	105-3797	4	Bolt
140	98-9356	4	Bolt
150	107-9074	1	Bolt
160	98-9586	1	Bolt
170	105-3709	1	Stud
180	98-7572	1	Nut
190	98-7699	1	Washer-Spring
200	98-9482	1	Seal-Oil
230	105-3710	2	Stud
240	98-9641	1	Cover-Case, Gear
250	108-3841	1	Filter-Oil

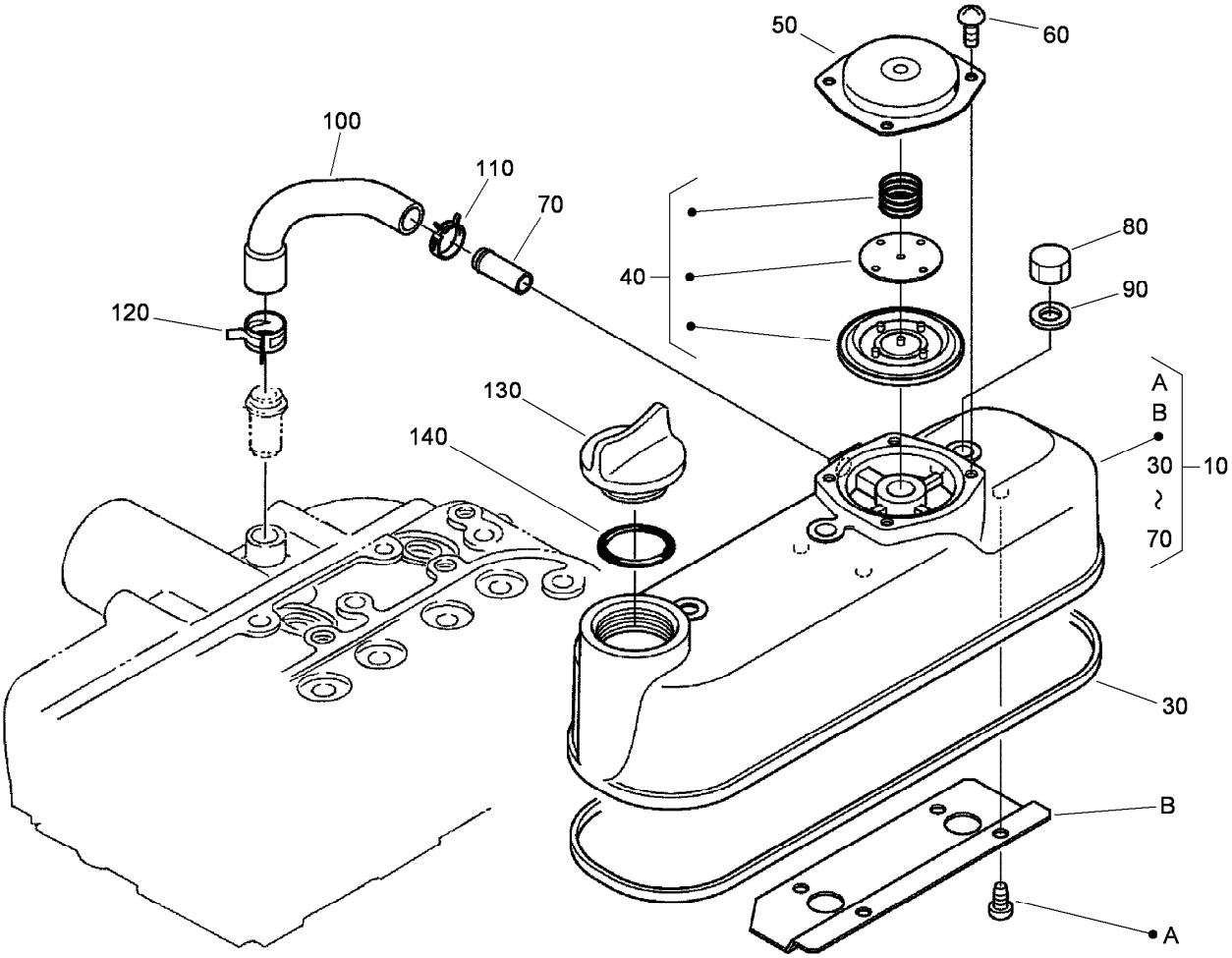

Cylinder Head Cover Assembly

Ref.	*Part Number*	*Qty.*	*Description*
10	108-6575	1	Cylinder Head Cover ASM
30	98-9615	1	Gasket-Cover, Head
40	108-2861	1	Breather Valve ASM
50	110-3714	1	Cover-Breather
60	98-9364	4	Screw (With Washer)
70	98-7766	1	Pipe-Return, Water
80	98-9455	3	Nut-Cap
90	98-9454	3	Gasket
100	108-2858	1	Tube-Breather
110	108-2859	1	Clamp-Hose
120	108-2860	1	Clamp-Hose
130	107-9075	1	Plug-Filler, Oil
140	99-3446	1	O-Ring

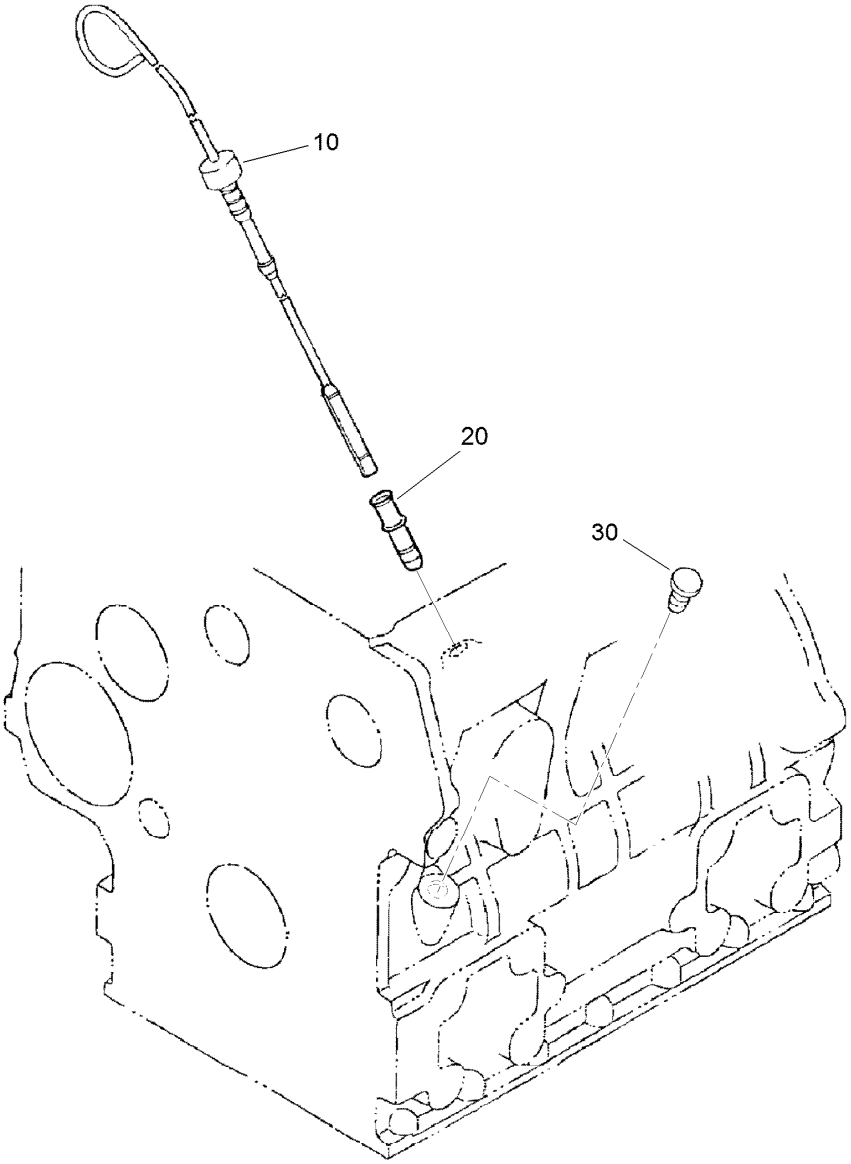

Dipstick and Guide Assembly

Ref.	*Part Number*	*Qty.*	*Description*
10	107-9076	1	Gauge-Oil
20	105-4580	1	Guide-Gauge, Oil
30	110-3720	1	Plug-Gauge, Oil

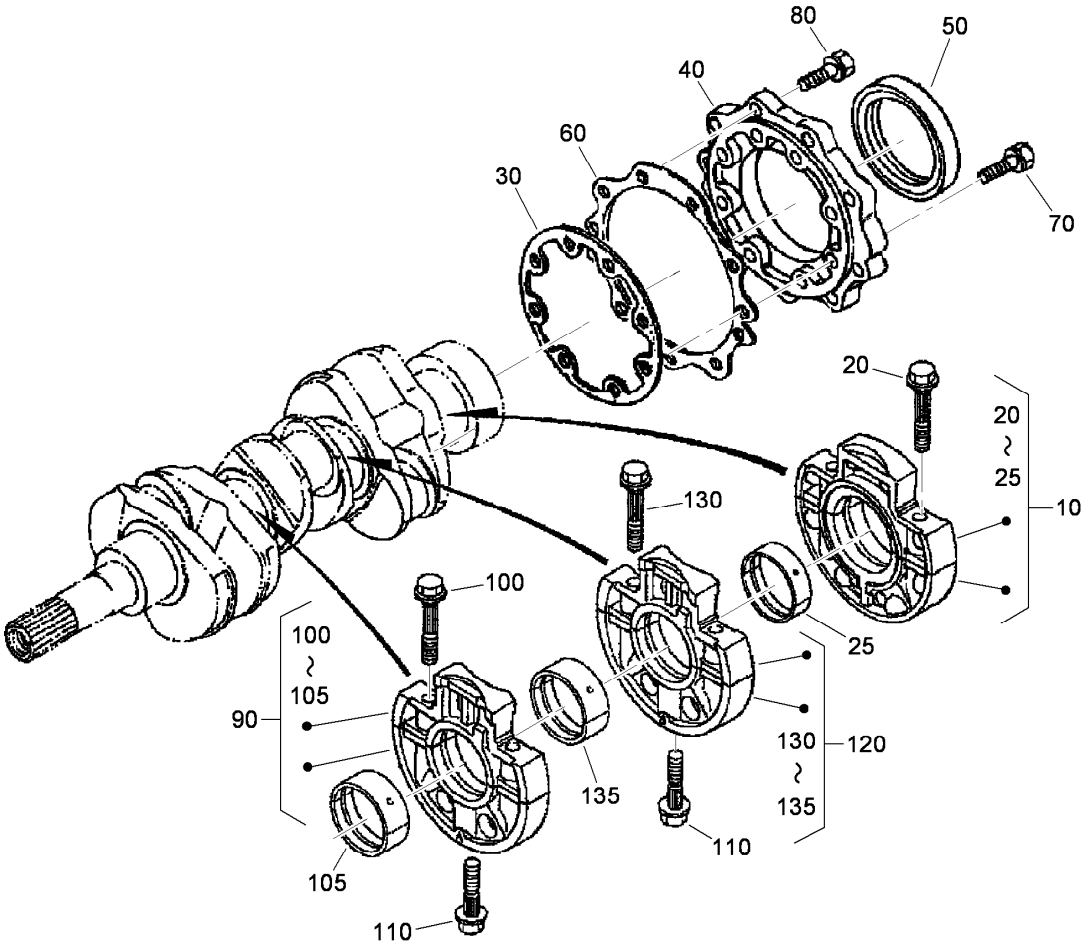

Main Bearing Case Assembly

Ref.	Part Number	Qty.	Description
10	112-7026	1	Wheel Bearing Case ASM
20	98-9484	6	Bolt-Case, Bearing
25	112-7006	1	Bearing-Main (STD)
25	112-7007	1	Metal-Crankshaft (.2Mm)
25	112-7008	1	Metal-Crankshaft (.4Mm)
30	98-9634	1	Gasket-Case, Bearing
40	98-9487	1	Cover-Case, Bearing
50	112-0180	1	Seal-Oil
60	98-9635	1	Gasket-Cover, Bearing Case
70	98-9352	8	Bolt
80	98-7568	9	Bolt
90	115-4106	1	Main Bearing Case ASM
100	98-9484	2	Bolt-Case, Bearing
105	98-9524	1	Metal-Crankshaft (STD Set)
105	98-9530	1	Bearing-Main (0.2Mm)
105	98-9531	1	Bearing-Main (0.4Mm)
110	98-9485	2	Bolt-Case, Bearing
120	115-4107	1	Main Bearing Case ASM
130	98-9484	2	Bolt-Case, Bearing
135	98-9524	1	Metal-Crankshaft (STD Set)
135	98-9530	1	Bearing-Main (0.2Mm)
135	98-9531	1	Bearing-Main (0.4Mm)

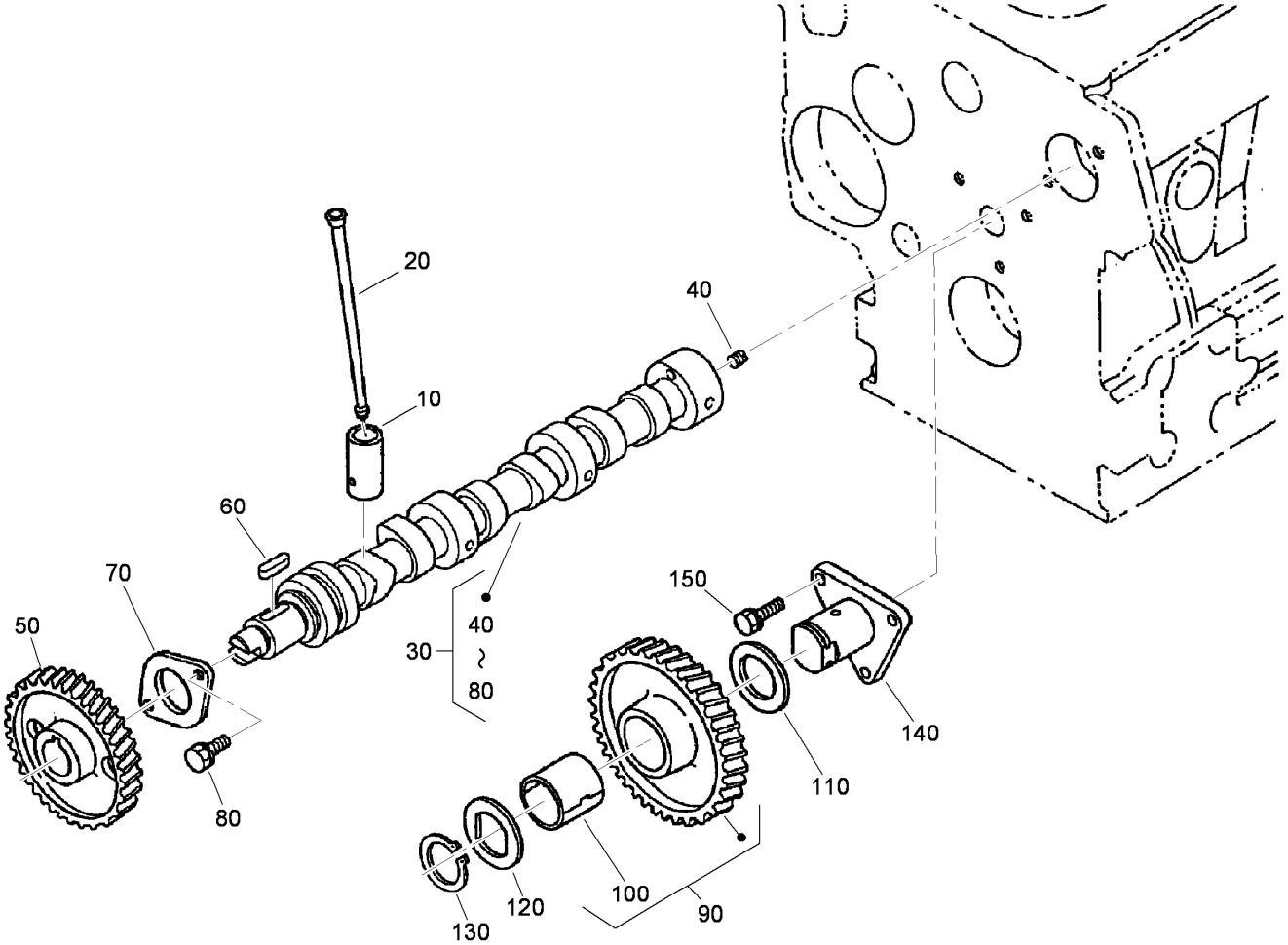

Cam Shaft and Idle Gear Assembly

Ref.	*Part Number*	*Qty.*	*Description*
10	112-0185	6	Tappet
20	98-9509	6	Rod-Push
30	108-6576	1	Camshaft ASM
40	98-7449	1	Screw-Set
50	98-9512	1	Gear-Cam
60	98-9378	1	Key-Feather
70	98-9510	1	Stopper-Camshaft
80	98-9351	2	Bolt
90	98-9649	1	Idle Gear ASM
100	98-9650	1	Bushing-Gear, Idle
110	98-9535	1	Collar-Gear, Idle
120	98-9536	1	Collar-Gear, Idle
130	98-9534	1	Circlip-Gear, Idle
140	98-9533	1	Shaft-Gear, Idle
150	98-7692	3	Bolt

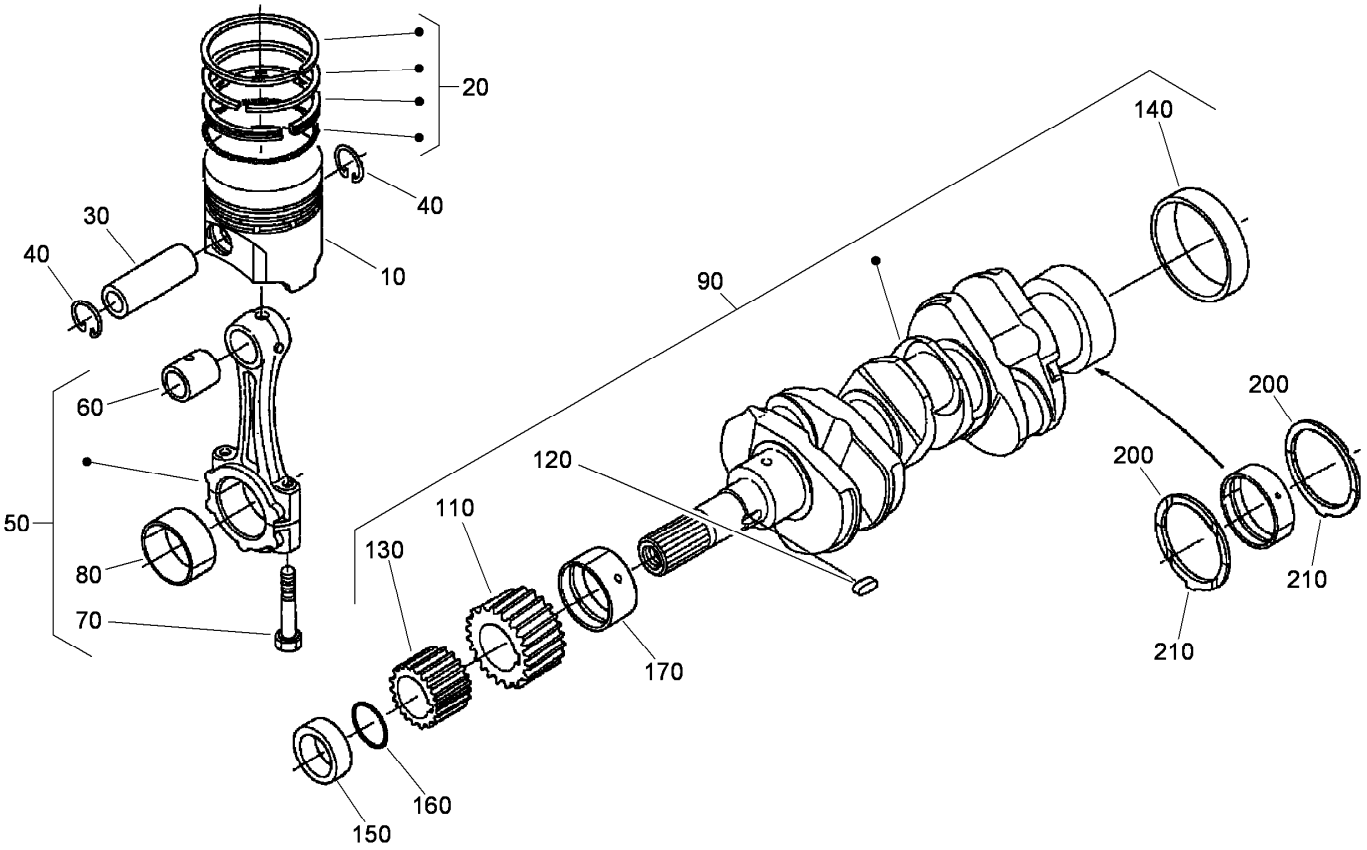

Piston and Crankshaft Assembly

Ref.	Part Number	Qty.	Description
10	112-8415	3	Piston ASM
10	112-8404	3	Piston (STD)
20	98-9619	3	Piston Ring ASM (0.5Mm)
20	98-9618	3	Piston Ring ASM (STD)
30	98-9513	3	Pin-Piston
40	98-9514	6	Circlip-Pin, Piston
50	115-3013	3	Connecting Rod ASM
60	115-3014	3	Bushing-Pin, Piston
70	98-9517	6	Bolt-Rod, Connecting
80	98-9520	3	Bearing-Rod (0.4Mm)
80	98-9519	3	Bearing-Rod (0.2Mm)
80	98-9518	3	Metal-Crankpin (STD)
90	98-9642	1	Crankshaft ASM
110	98-9532	1	Gear-Crankshaft

Ref.	Part Number	Qty.	Description
120	98-9666	1	Key
130	98-9542	1	Gear-Drive, Oil Pump
140	98-9522	1	Sleeve-Crankshaft
150	98-9521	1	Collar-Crankshaft
160	105-3783	1	O-Ring
170	98-9523	1	Metal Crankshaft (STD)
170	98-9528	1	Bearing-Main (0.2Mm)
170	98-9529	1	Bearing-Main (0.4Mm)
200	98-9413	2	Bearing-Thrust (STD)
200	98-9414	2	Bearing-Thrust (0.2Mm)
200	98-9415	2	Bearing-Thrust (0.4Mm)
210	98-9688	2	Bearing-Thrust (STD)
210	98-9689	2	Bearing-Thrust (0.2Mm)
210	98-9690	2	Bearing-Thrust (0.4Mm)

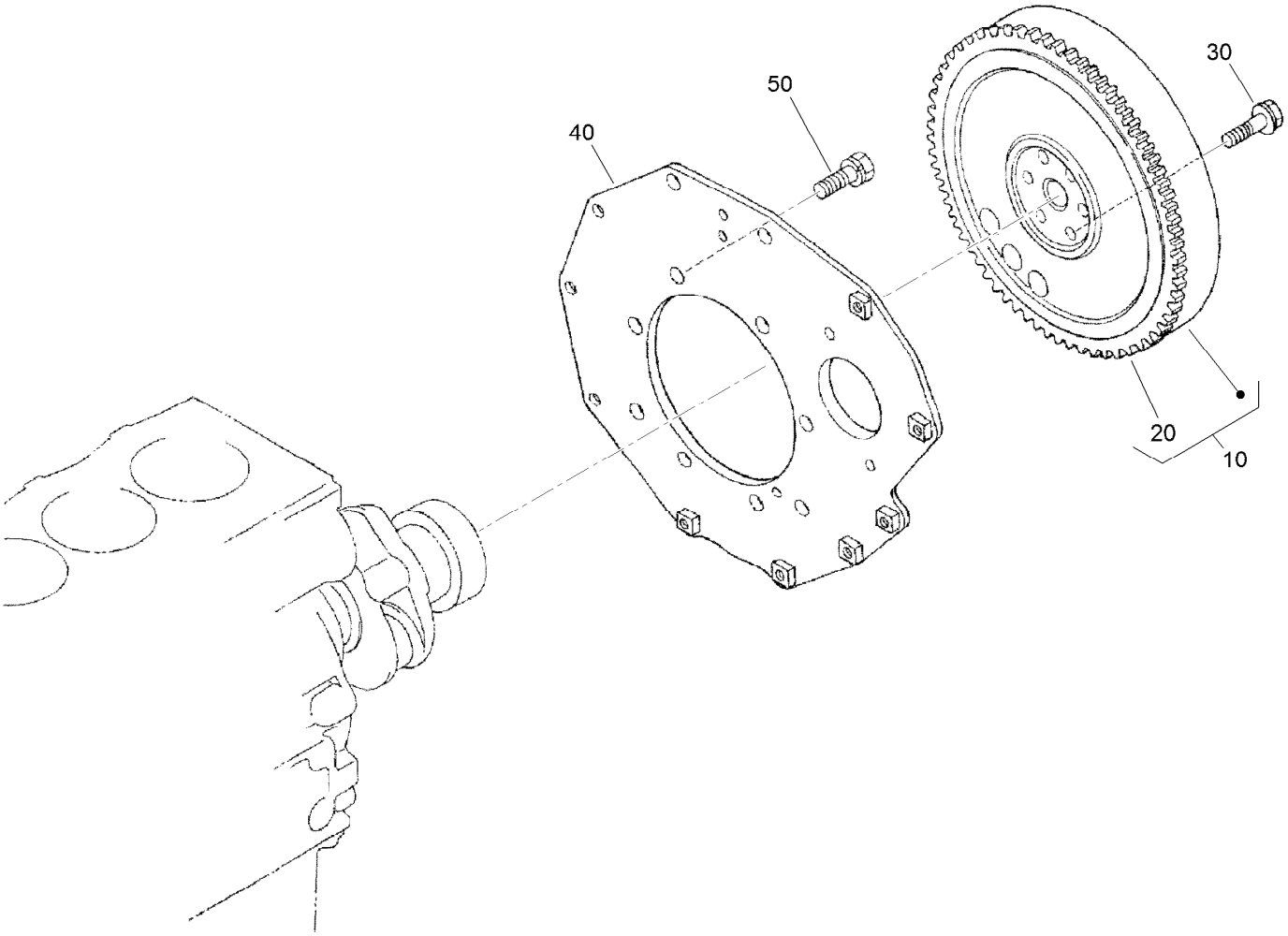

Flywheel Assembly

Ref.	Part Number	Qty.	Description
10	105-3784	1	Flywheel ASM
20	115-3015	1	Gear-Ring
30	98-9537	6	Bolt-Flywheel
40	98-9486	1	Plate-End, Rear
50	98-9392	8	Bolt

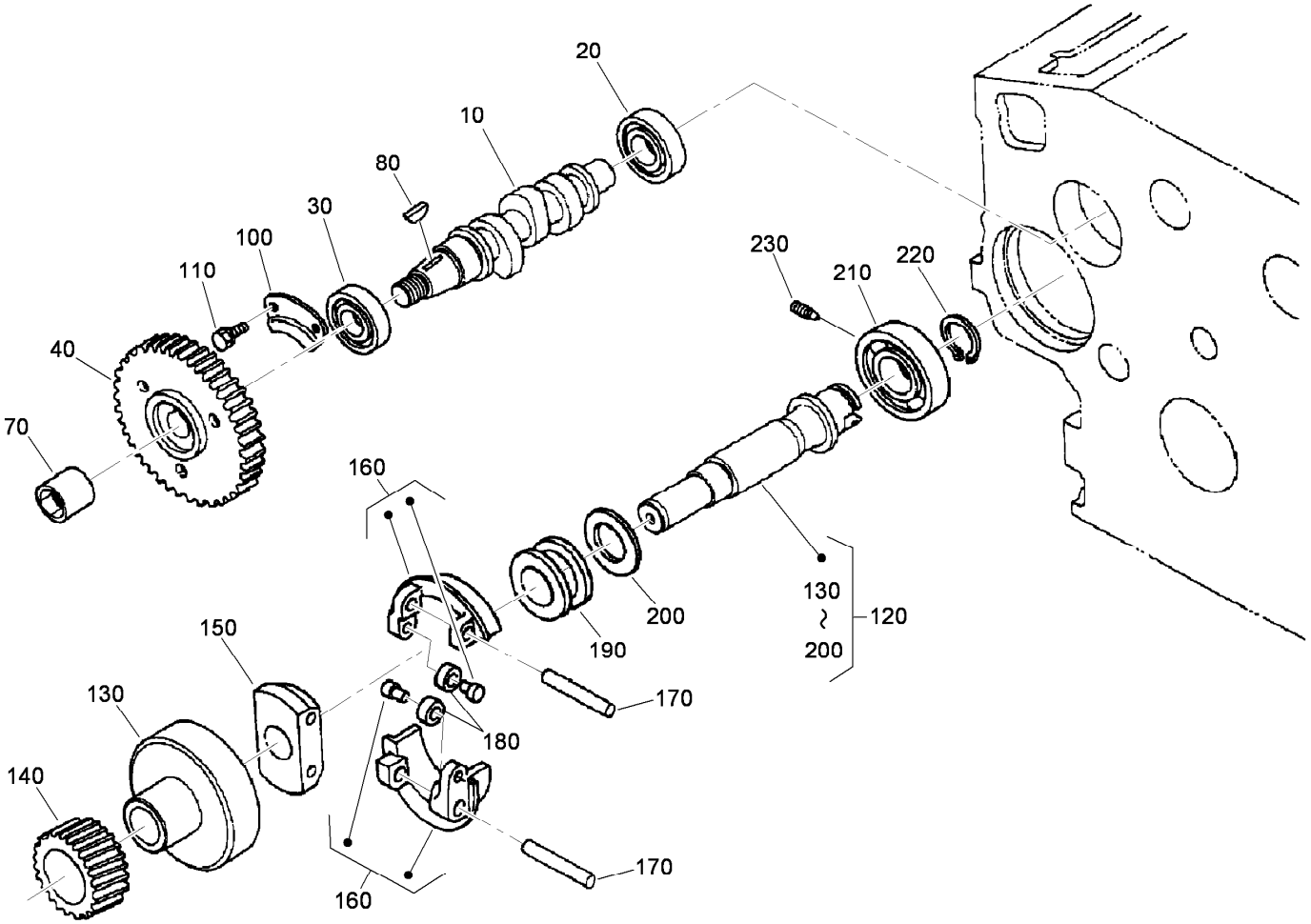

Fuel Camshaft and Governor Shaft Assembly

Ref.	*Part Number*	*Qty.*	*Description*
10	98-9459	1	Camshaft-Fuel
20	107-9077	1	Bearing-Ball
30	107-9078	1	Bearing-Ball
40	98-9669	1	Gear-Pump, Injection
70	98-9590	1	Nut-Cap
80	98-9595	1	Key-Woodruff
100	98-9511	1	Stopper-Fuel, Camshaft
110	98-9350	2	Bolt
120	98-9644	1	Governor Shaft ASM
130	98-9562	1	Holder-Gear, Governor
140	98-9673	1	Gear-Governor
150	98-9561	1	Holder-Weight, Governor
160	98-9559	2	Governor Weight ASM
170	98-9560	2	Shaft-Weight, Governor
180	98-9692	2	Roller
190	98-9563	1	Sleeve-Governor
200	98-9564	1	Washer-Thrust
210	107-9079	1	Bearing-Ball
220	98-9657	1	Circlip-Shaft, Governor
230	98-9565	1	Screw-Set

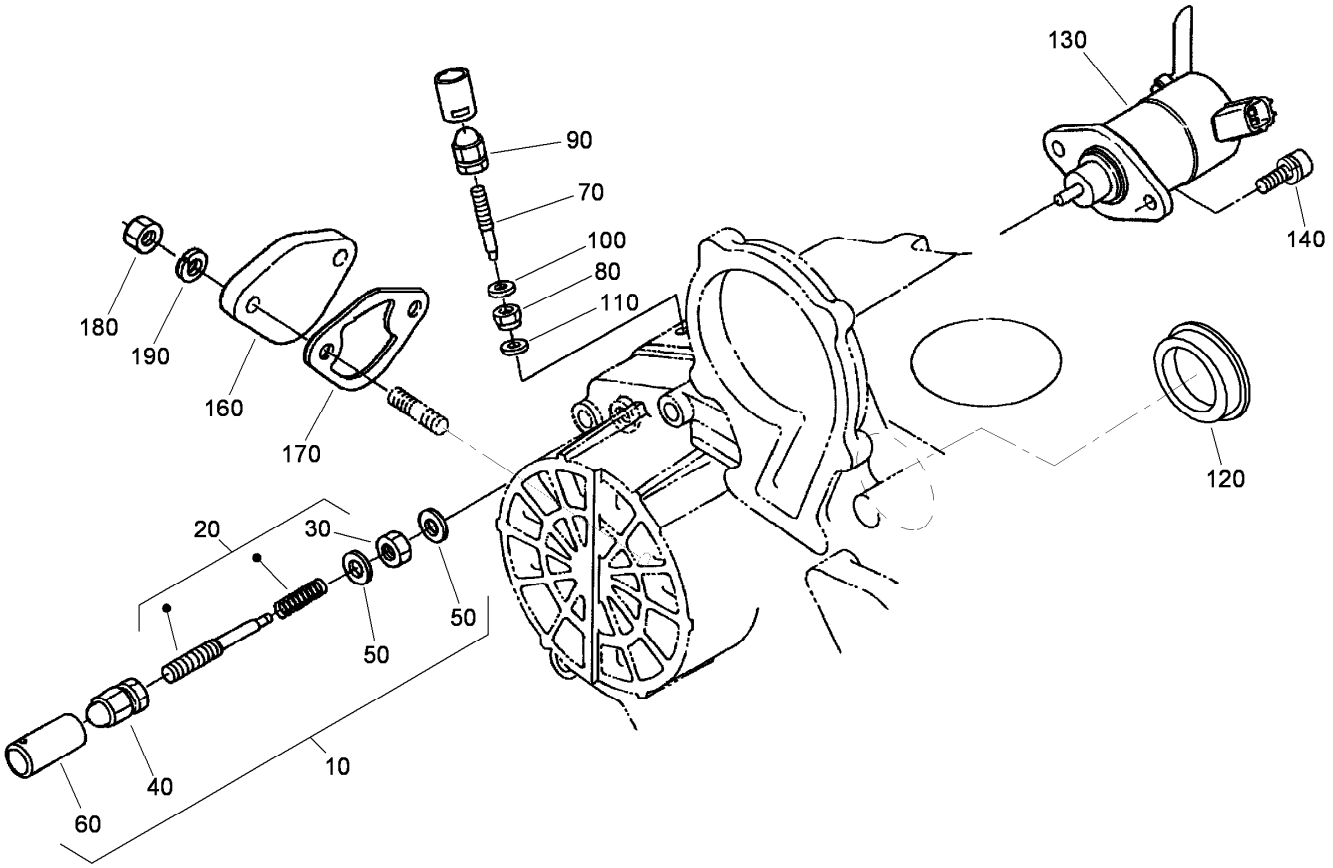

Idle Apparatus and Stop Solenoid Assembly

Ref.	*Part Number*	*Qty.*	*Description*
10	98-9678	1	Idle Apparatus ASM
20	112-7014	1	Adjusting Bolt ASM
30	98-9439	1	Nut
40	112-0181	1	Nut
50	98-7654	2	Gasket
60	98-7656	1	Cap
70	112-7015	1	Bolt-Adjusting
80	99-3512	1	Nut
90	112-0181	1	Nut
100	98-7654	1	Gasket
110	107-9081	1	Gasket
120	112-7016	1	Cover-Pump
130	104-5155	1	Solenoid-Stop
140	115-3039	2	Bolt-HSH
160	99-3514	1	Cover
170	98-9636	1	Gasket-Pump, Fuel
180	98-7572	2	Nut
190	98-7699	2	Washer-Spring

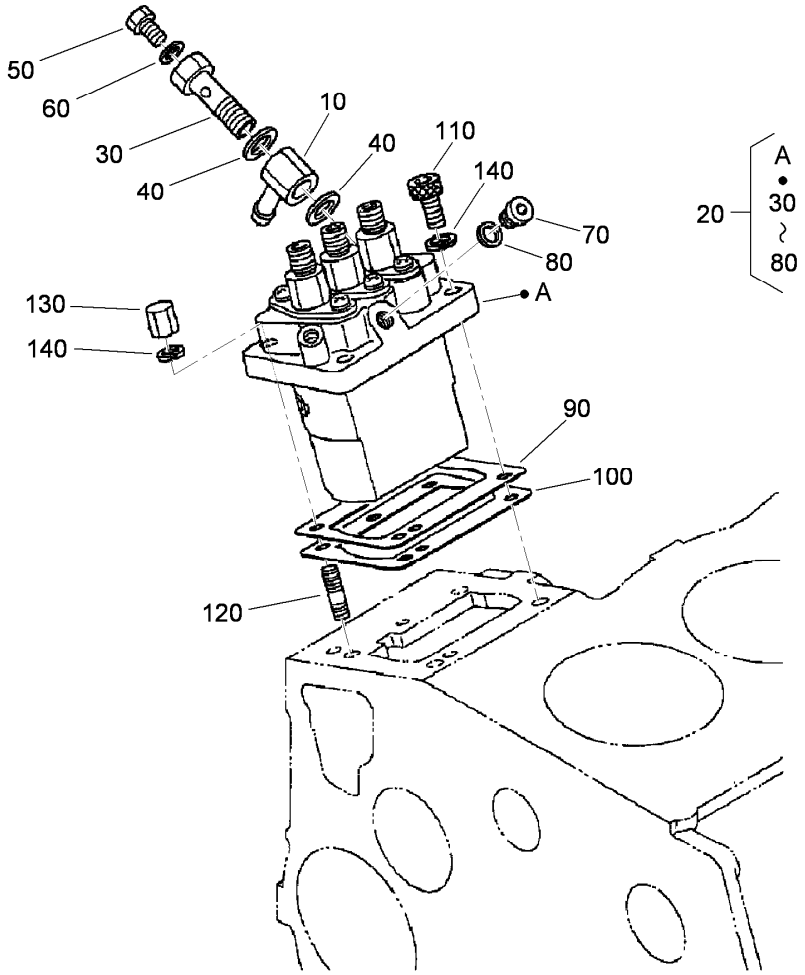

Injection Pump Assembly

Ref.	Part Number	Qty.	Description
10	98-9596	1	Joint-Eye
20	98-9643	1	Injection Pump ASM
30	98-9464	1	Bolt-Joint
40	98-9445	2	Gasket
50	98-9430	1	Screw
60	98-9446	1	Gasket
70	98-9466	1	Plug
80	98-9451	1	Gasket
90	98-9456	1	Shim-Injection (0.20Mm)
90	98-9457	1	Shim-Injection (0.25Mm)
90	115-3045	1	Shim-Injection (0.175Mm)
100	98-9458	1	Shim-Injection (0.30Mm)
100	115-3046	1	Shim-Injection (0.35Mm)
110	98-9361	2	Bolt-HSH
120	98-9438	2	Stud
130	98-9440	2	Nut-Cap
140	98-7699	4	Washer-Spring

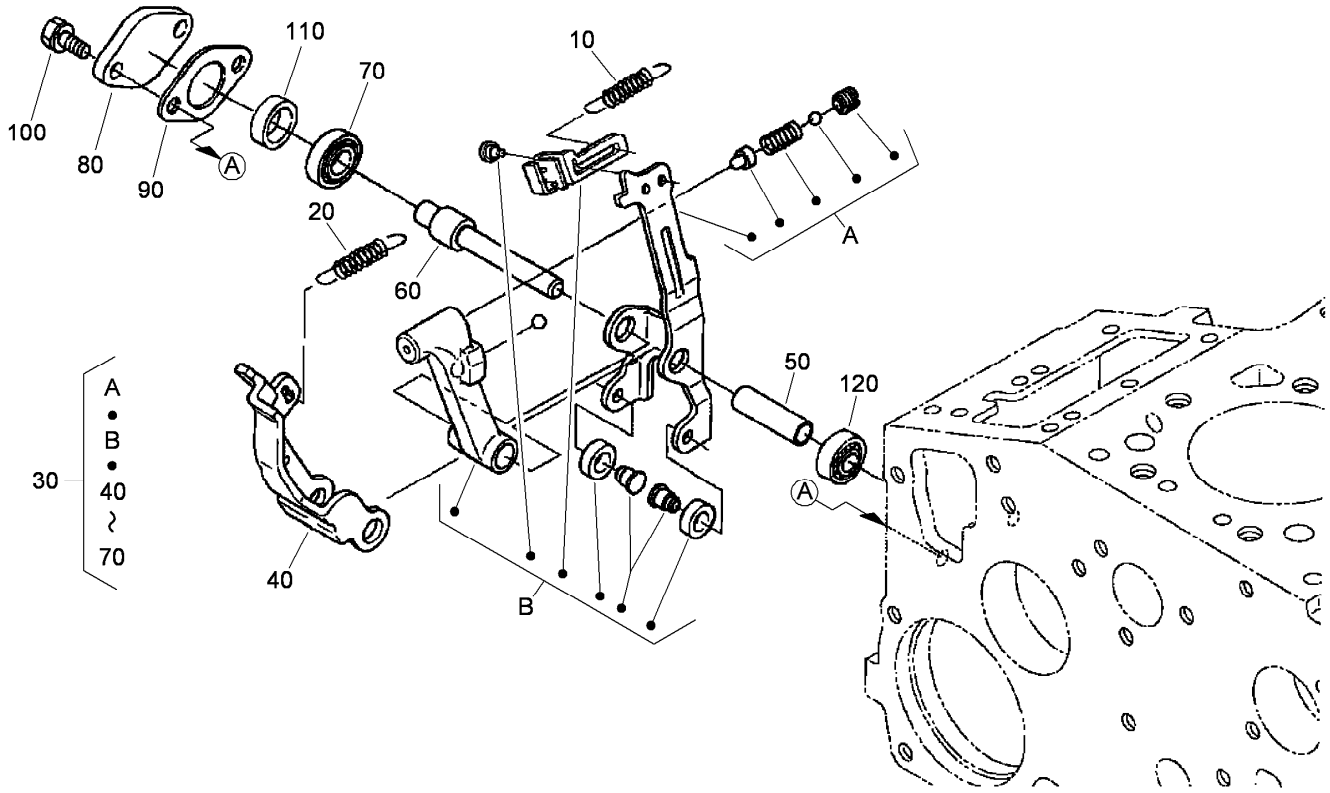

Governor Assembly

Ref.	Part Number	Qty.	Description
10	105-3786	1	Spring-Start
20	98-9681	1	Spring-Governor
30	115-4502	1	Fork Lever ASM
40	107-9084	1	Lever-Fork
50	107-9085	1	Shaft-Lever, Fork
60	107-9086	1	Shaft-Lever, Fork
70	98-9570	1	Bearing-Miniaturize
80	98-9569	1	Cover-Shaft, Fork Lever
90	98-9682	1	Gasket
100	98-9351	2	Bolt
110	98-9567	1	Collar
120	98-9571	1	Bearing-Miniaturize

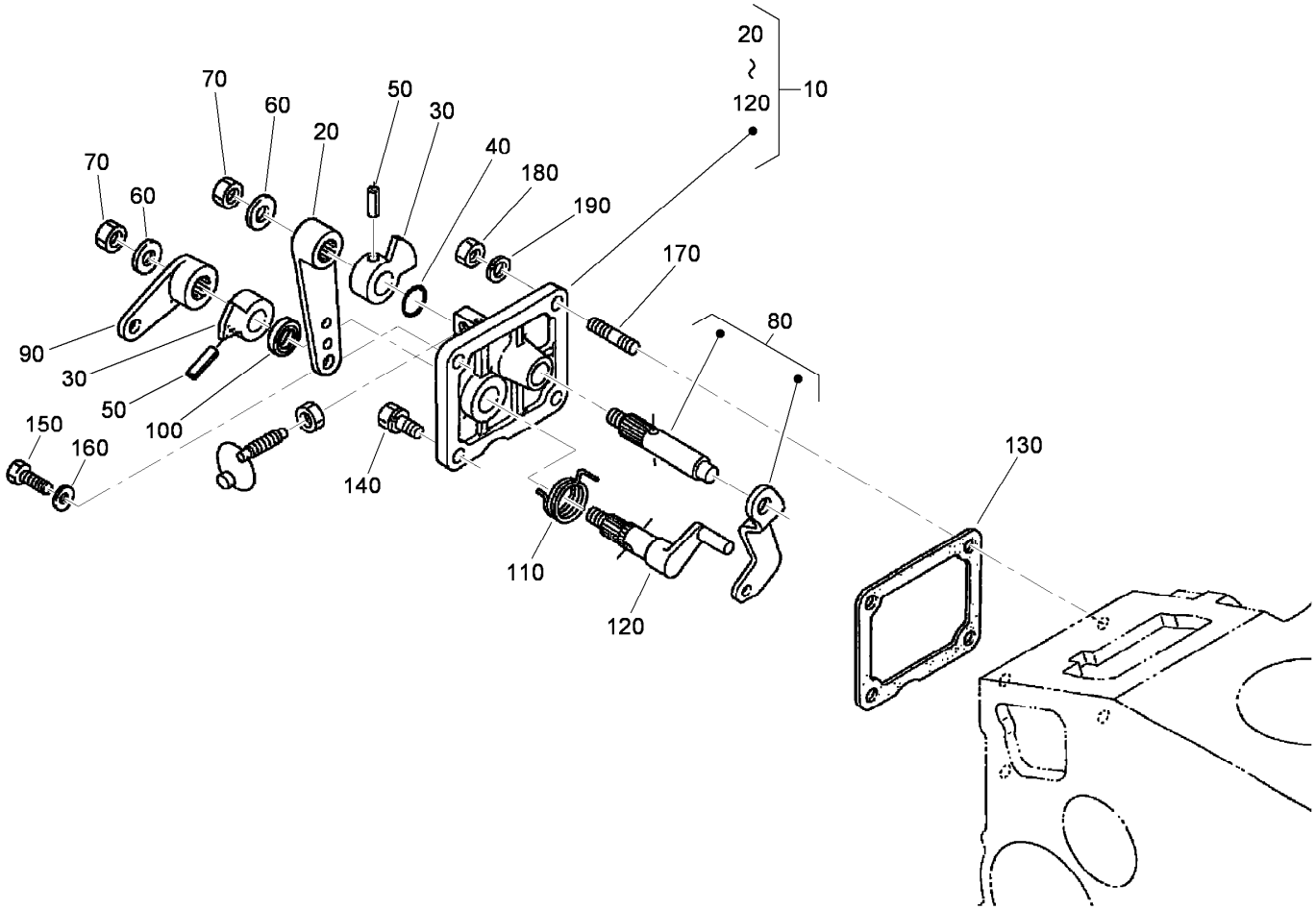

Speed Control Plate Assembly

Ref.	Part Number	Qty.	Description
10	105-3735	1	Control Plate ASM
20	98-9662	1	Lever-Control, Speed
30	98-9572	2	Lever-Control, Speed
40	105-3788	1	O-Ring
50	98-7602	2	Pin-Spring
60	98-9594	2	Washer-Plain
70	98-9589	2	Nut
80	98-9658	1	Governor Lever ASM
90	98-9663	1	Lever-Stop, Engine
100	98-7601	1	Seal-Oil
110	98-9472	1	Spring-Return
120	98-9664	1	Shaft-Lever, Stop
130	98-9637	1	Gasket
140	98-7692	1	Bolt
150	99-8348	1	Bolt
160	98-7654	2	Gasket
170	105-3710	2	Stud
180	98-7572	2	Nut
190	98-7699	2	Washer-Spring

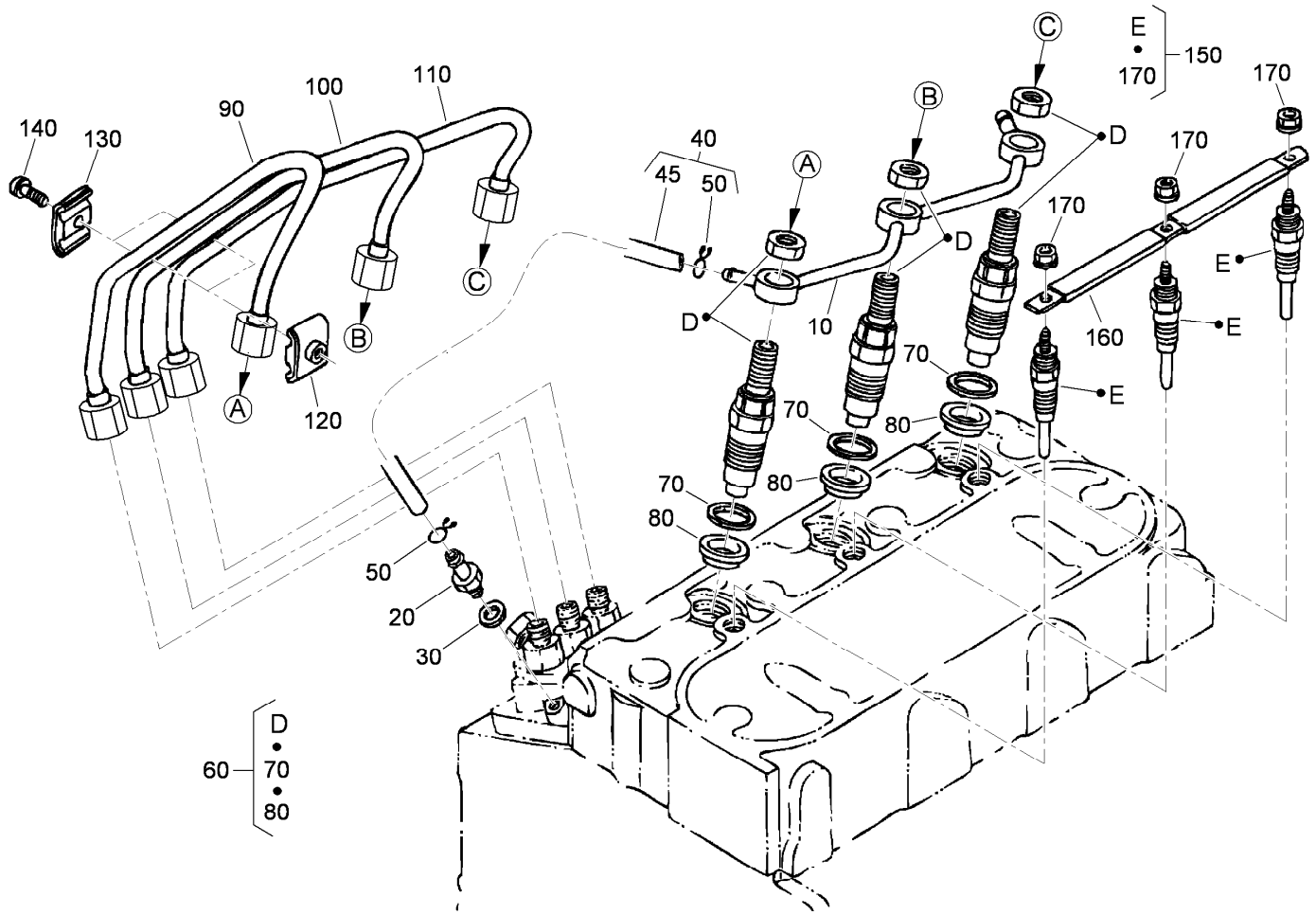

Nozzle Holder and Glow Plug Assembly

Ref.	Part Number	Qty.	Description
10	98-9620	1	Overflow Pipe ASM
20	98-9431	1	Screw-Bleeder, Air
30	98-7654	1	Gasket
40	98-9420	1	Overflow Pipe ASM
45	112-0182	1	Pipe-Overflow
50	98-7671	2	Clip-Pipe
60	108-2866	3	Nozzle Holder Kit
70	98-7676	3	Gasket
80	98-7677	3	Seal-Heat
90	98-9653	1	Pipe-Injection
100	98-9654	1	Pipe-Injection
110	98-9655	1	Pipe-Injection
120	98-7682	2	Clamp-Pipe
130	98-7683	2	Clamp-Pipe
140	98-7684	2	Screw (W/Washer)
150	115-3019	3	Plug-Glow
160	98-9631	1	Cord-Plug, Glow
170	99-8377	3	Nut-Flange

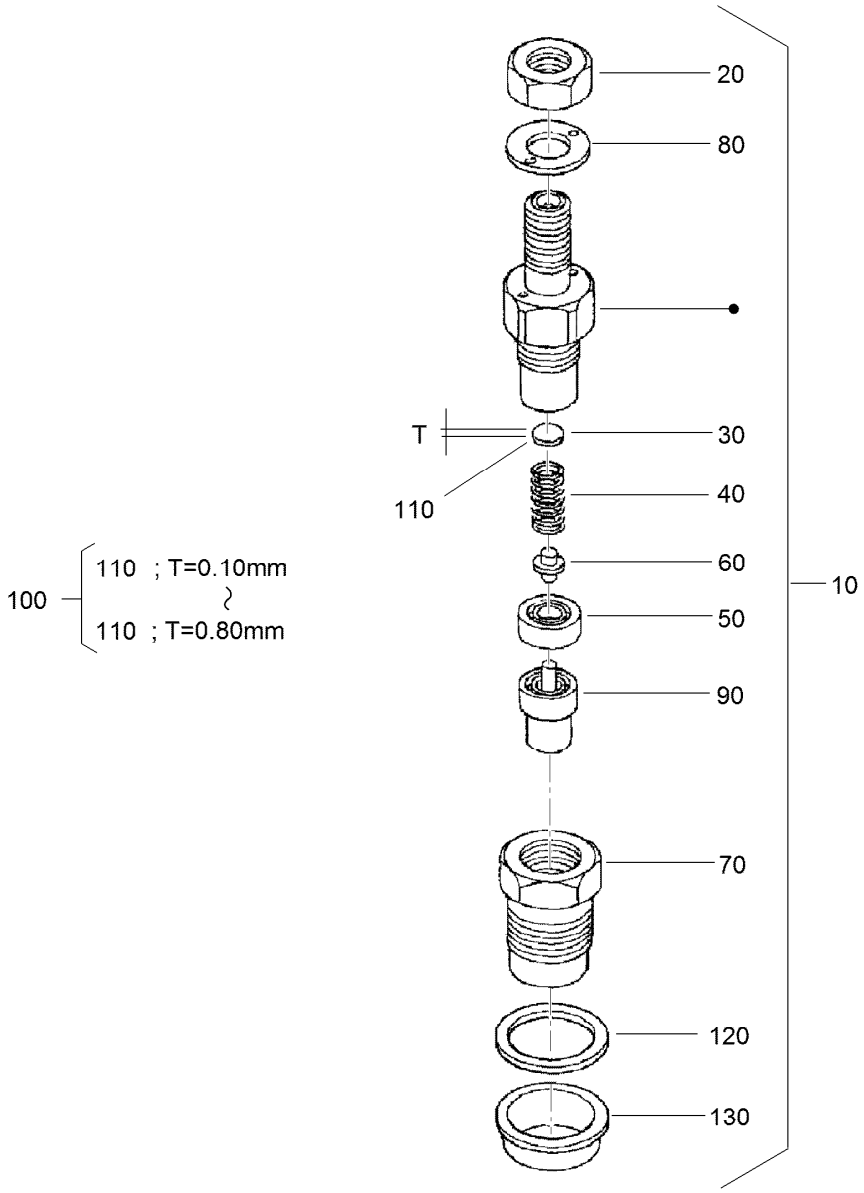

Nozzle Holder Assembly

Ref.	Part Number	Qty.	Description
10	108-2866	3	Nozzle Holder Kit
20	99-8301	3	Nut
30	99-8302	3	Washer-Adjusting
40	99-8303	3	Spring-Nozzle
50	99-8304	3	Spacer-Distance
60	99-8305	3	Rod-Push
70	99-8306	3	Nut-Nozzle
80	99-8307	3	Washer-Plain
90	107-7826	3	Piece-Nozzle
100	99-8309	3	Adjusting Washer ASM
110	99-8310	3	Washer-Adjust (0.10Mm)

Ref.	Part Number	Qty.	Description
110	99-8311	3	Washer-Adjust (0.20Mm)
110	99-8312	3	Washer-Adjust (0.30Mm)
110	99-8313	3	Washer-Adjust (0.40Mm)
110	99-8314	3	Washer-Adjust (0.50Mm)
110	99-8315	3	Washer-Adjust (0.52Mm)
110	99-8316	3	Washer-Adjust (0.54Mm)
110	99-8317	3	Washer-Adjust (0.56Mm)
110	99-8318	3	Washer-Adjust (0.58Mm)
110	99-8319	3	Washer-Adjust (0.80Mm)
120	98-7676	3	Gasket
130	98-7677	3	Seal-Heat

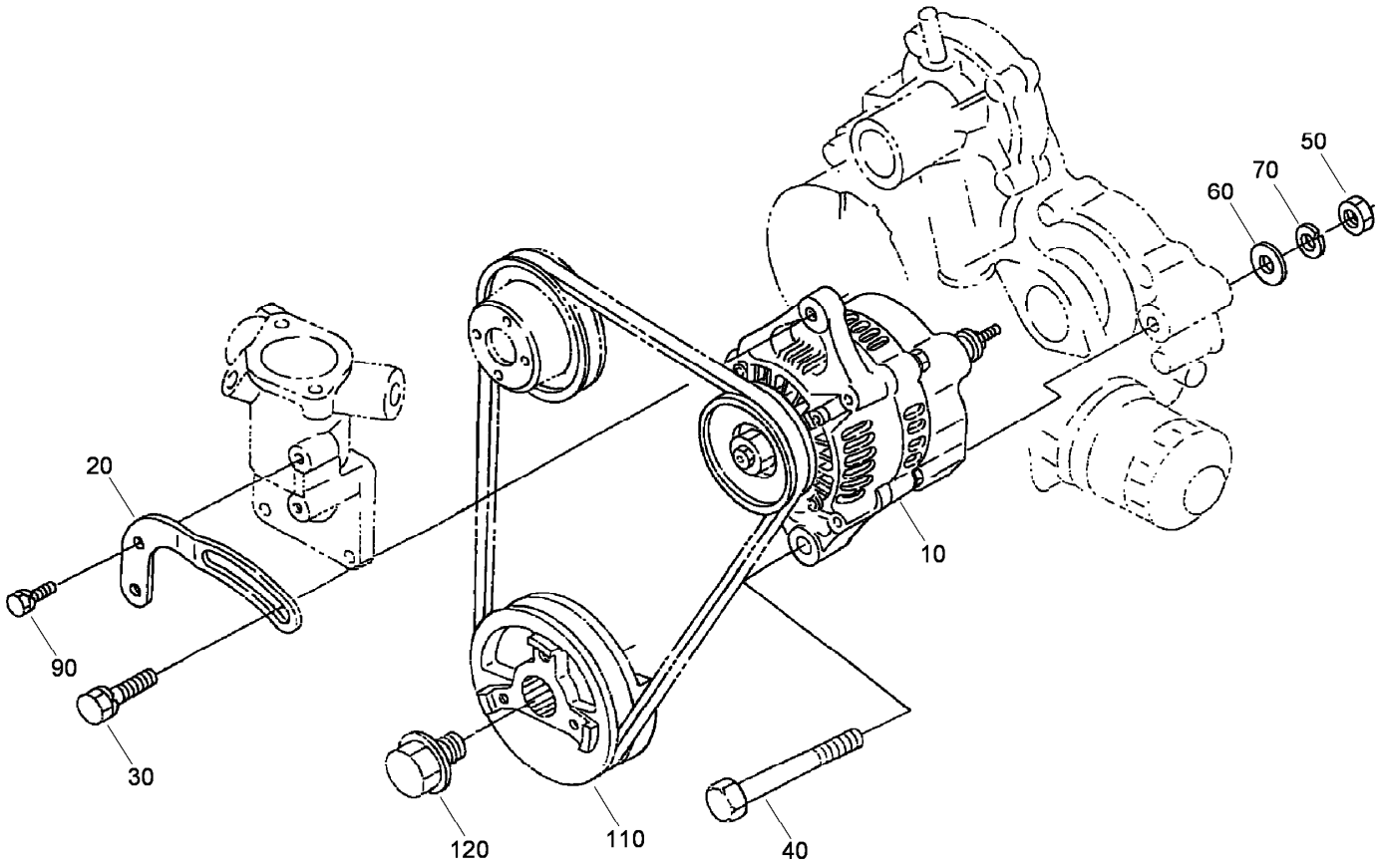

Alternator and Pulley Assembly

Ref.	*Part Number*	*Qty.*	*Description*
10	98-9474	1	Alternator ASM
20	98-9573	1	Stay-Dynamo
30	108-7088	1	Bolt
40	98-9360	1	Bolt
50	98-7737	1	Nut
60	3256-24	1	Washer-Flat
70	98-7738	1	Washer-Spring
90	98-7692	1	Bolt
110	98-9473	1	Pulley-Drive, Fan
120	98-9585	1	Bolt

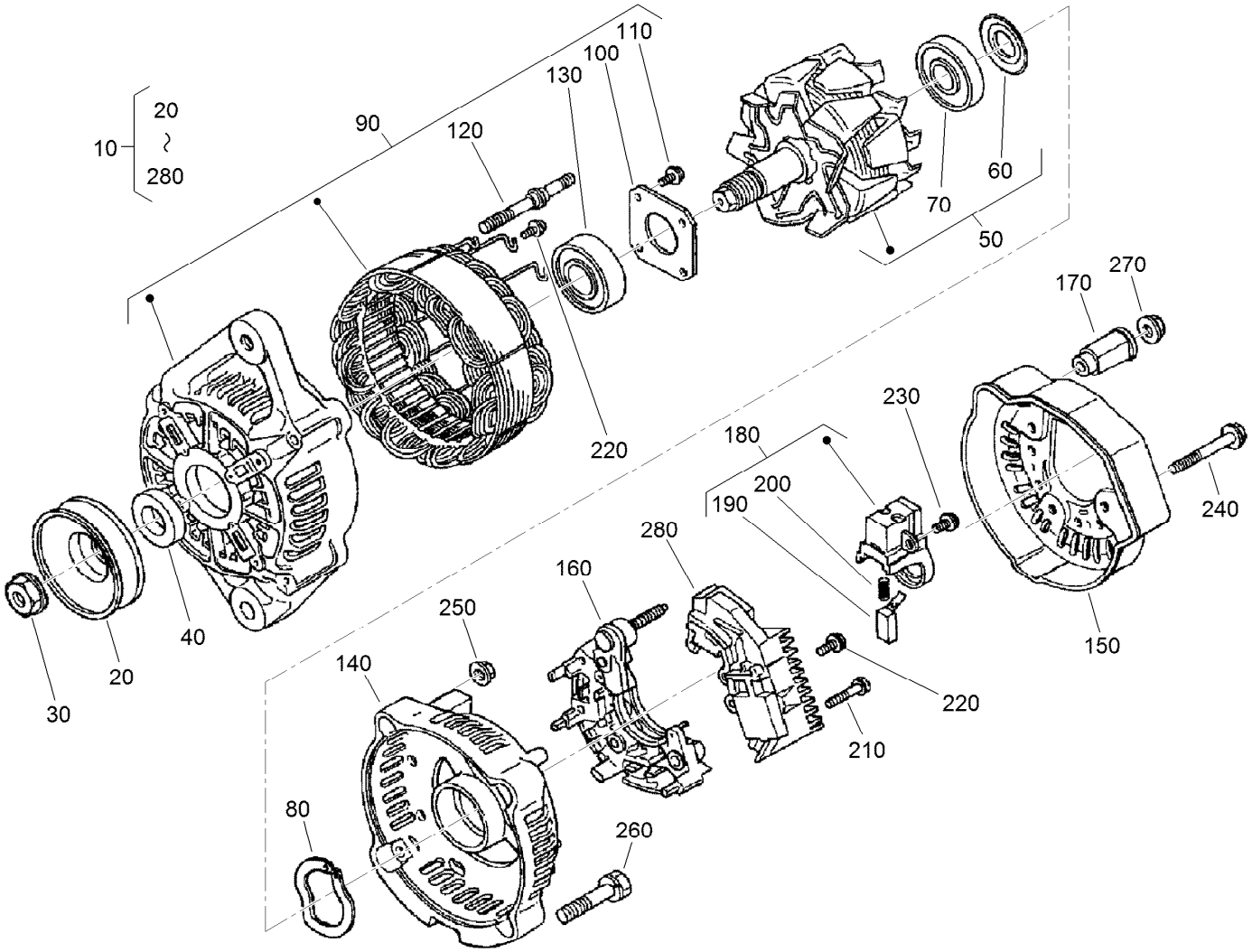

Alternator Components Assembly

Ref.	Part Number	Qty.	Description
10	98-9474	1	Alternator ASM
20	98-9453	1	Pulley-Dynamo
30	98-7708	1	Nut
40	98-7709	1	Collar
50	107-0136	1	Rotor ASM
60	98-7711	1	Cover-Bearing
70	107-0138	1	Bearing-Ball
80	98-7713	1	Washer-Thrust
90	107-0139	1	Drive End Frame ASM
100	98-7715	1	Plate-Retainer
110	98-7716	4	Screw-Head, Round
120	98-7717	2	Bolt-Through
130	107-0137	1	Bearing-Ball
140	107-9087	1	Frame-End

Ref.	Part Number	Qty.	Description
150	107-0140	1	Cover-End
160	98-7721	1	Rectifier ASM
170	98-7722	1	Bushing-Insulation
180	107-0141	1	Brush Holder ASM
190	98-7724	2	Brush
200	98-7725	2	Spring-Brush
210	98-7726	2	Screw-Head, Round
220	98-7727	6	Screw-Head, Round
230	98-7728	1	Screw-Head, Round
240	98-7729	3	Bolt
250	98-7730	2	Nut
260	98-7731	2	Bolt
270	98-7732	1	Nut
280	110-3799	1	Regulator ASM

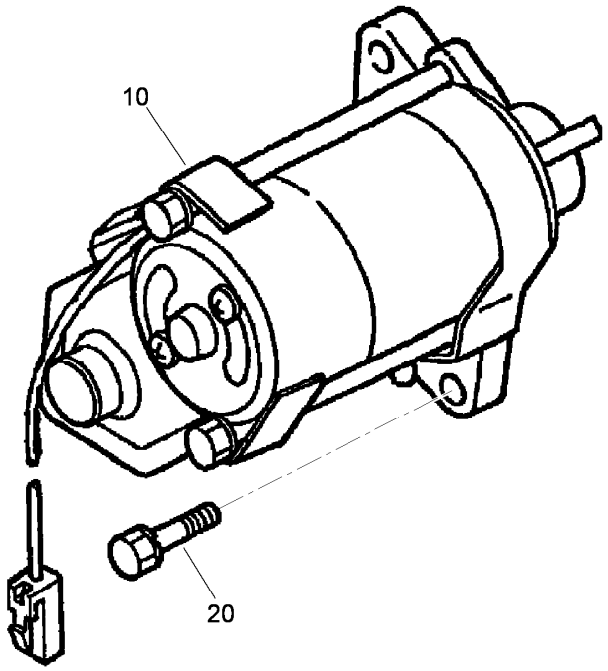

Starter Assembly

Ref.	*Part Number*	*Qty.*	*Description*
10	98-9705	1	Starter ASM
20	98-7697	2	Bolt

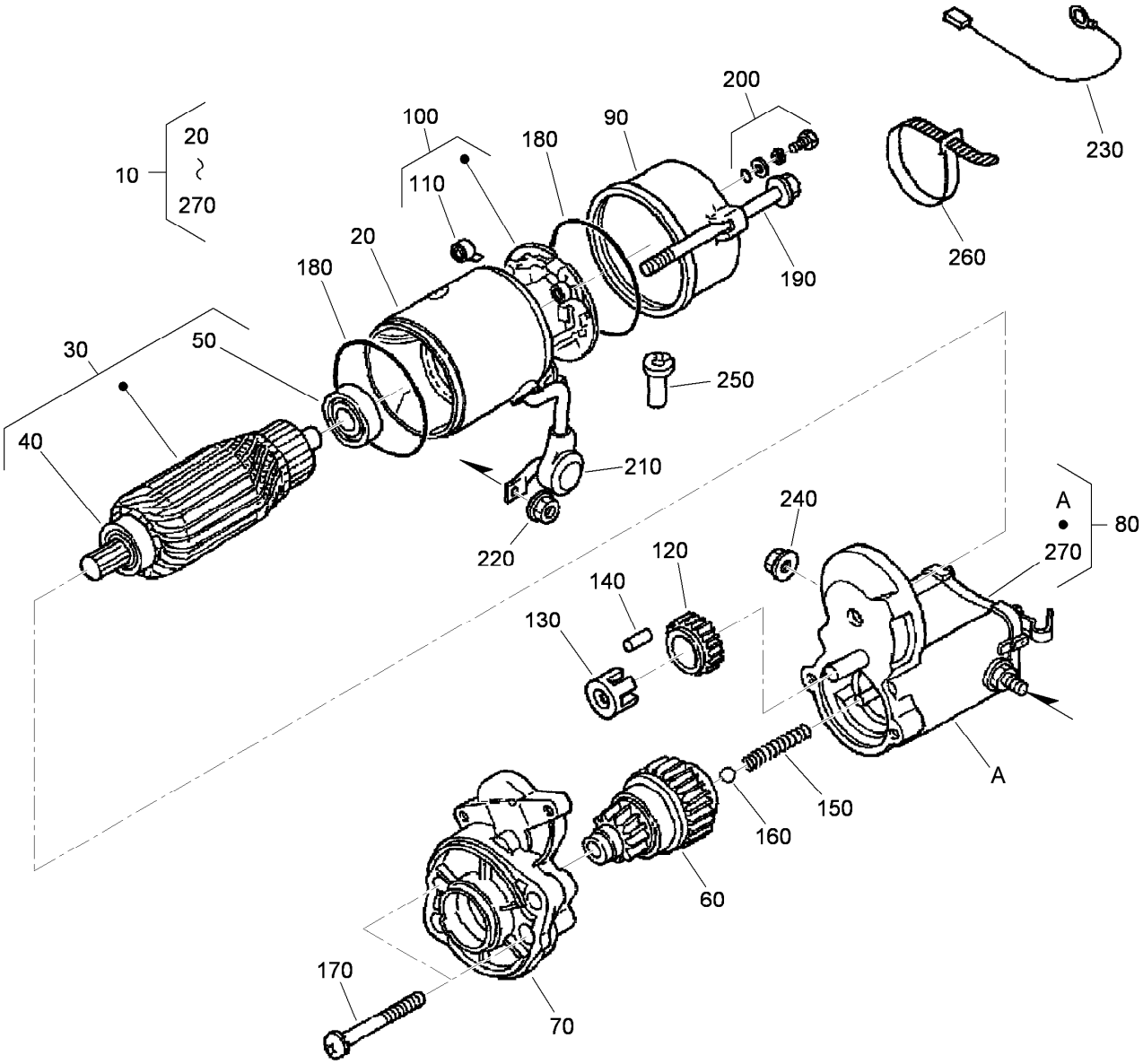

Starter (Component Part) Assembly

Ref.	Part Number	Qty.	Description
10	98-9705	1	Starter ASM
20	104-8608	1	Yoke ASM
30	98-7742	1	Armature ASM
40	98-7744	1	Bearing
50	98-7743	1	Bearing
60	99-8373	1	Clutch-Running, Over
70	99-8374	1	Frame-End, Drive
80	105-3746	1	Magnetic Switch ASM
90	98-7748	1	Frame-End
100	98-7749	1	Brush Holder ASM
110	98-7750	4	Spring-Brush
120	98-7751	1	Gear
130	98-7752	1	Retainer
140	98-7753	5	Roller

Ref.	Part Number	Qty.	Description
150	98-7754	1	Spring
160	98-7755	1	Ball
170	98-7756	2	Bolt
180	98-7757	2	O-Ring
190	100-9240	2	Bolt
200	98-7758	2	Bolt ASM
210	99-8375	1	Cover
220	99-8371	1	Nut-Hex
230	98-9711	1	Cord-Solenoid, Stop
240	99-8376	1	Nut-Hex
250	98-7759	1	Pipe-Drain
260	98-9712	1	Band-Cover
270	105-2886	1	Cover ASM

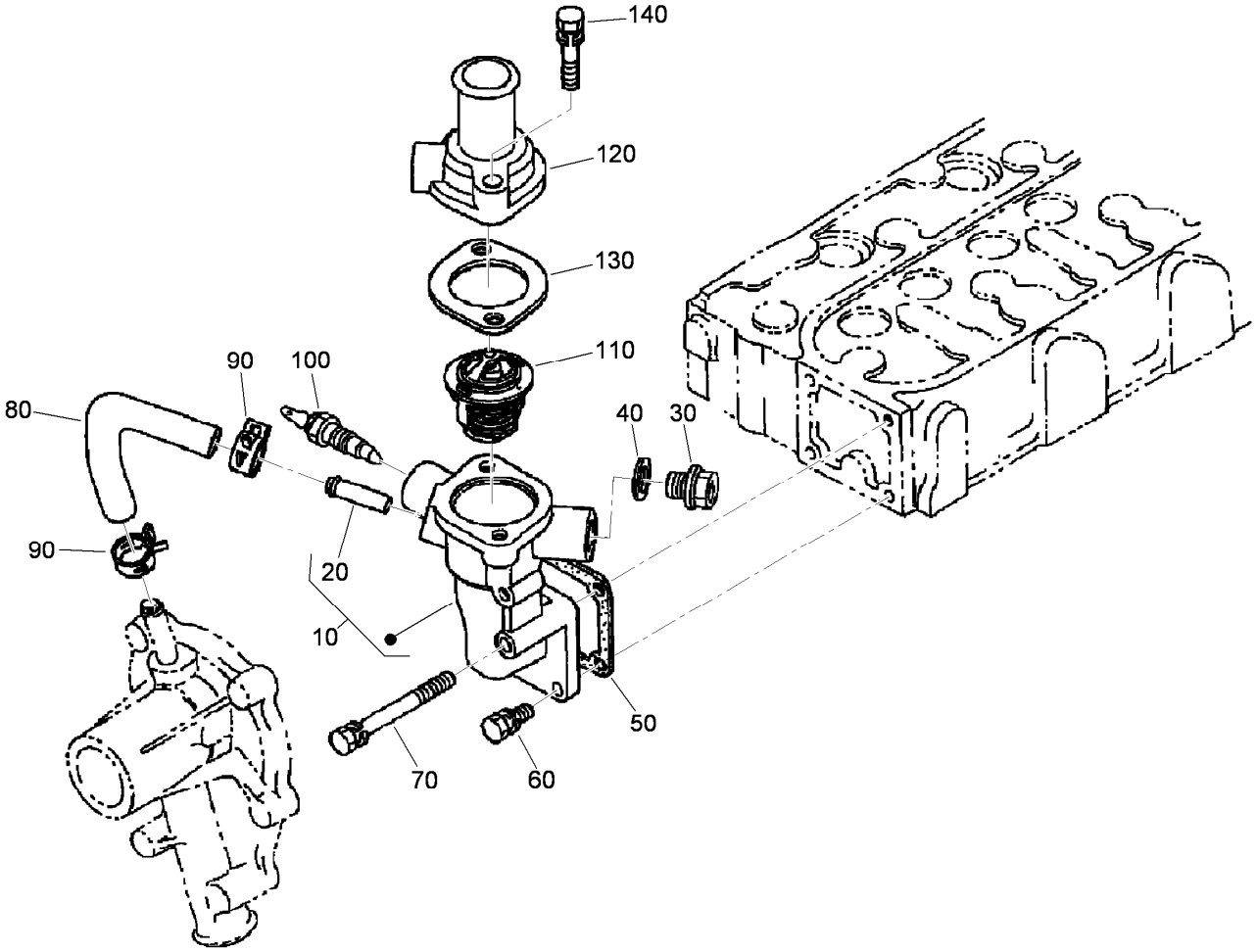

Water Flange and Thermostat Assembly

Ref.	Part Number	Qty.	Description
10	98-9713	1	Water Flange ASM
20	98-9580	1	Pipe-Return, Water
30	105-3747	1	Plug
40	99-3583	1	Gasket
50	98-9638	1	Gasket-Flange, Water
60	98-7692	3	Bolt
70	98-9356	1	Bolt
80	98-9578	1	Pipe-Return, Water
90	98-9579	2	Band-Pipe
100	98-9719	1	Thermoswitch
110	98-7778	1	Thermostat ASM
120	98-9471	1	Cover-Thermostat
130	105-3748	1	Gasket-Thermostat
140	98-7777	2	Bolt

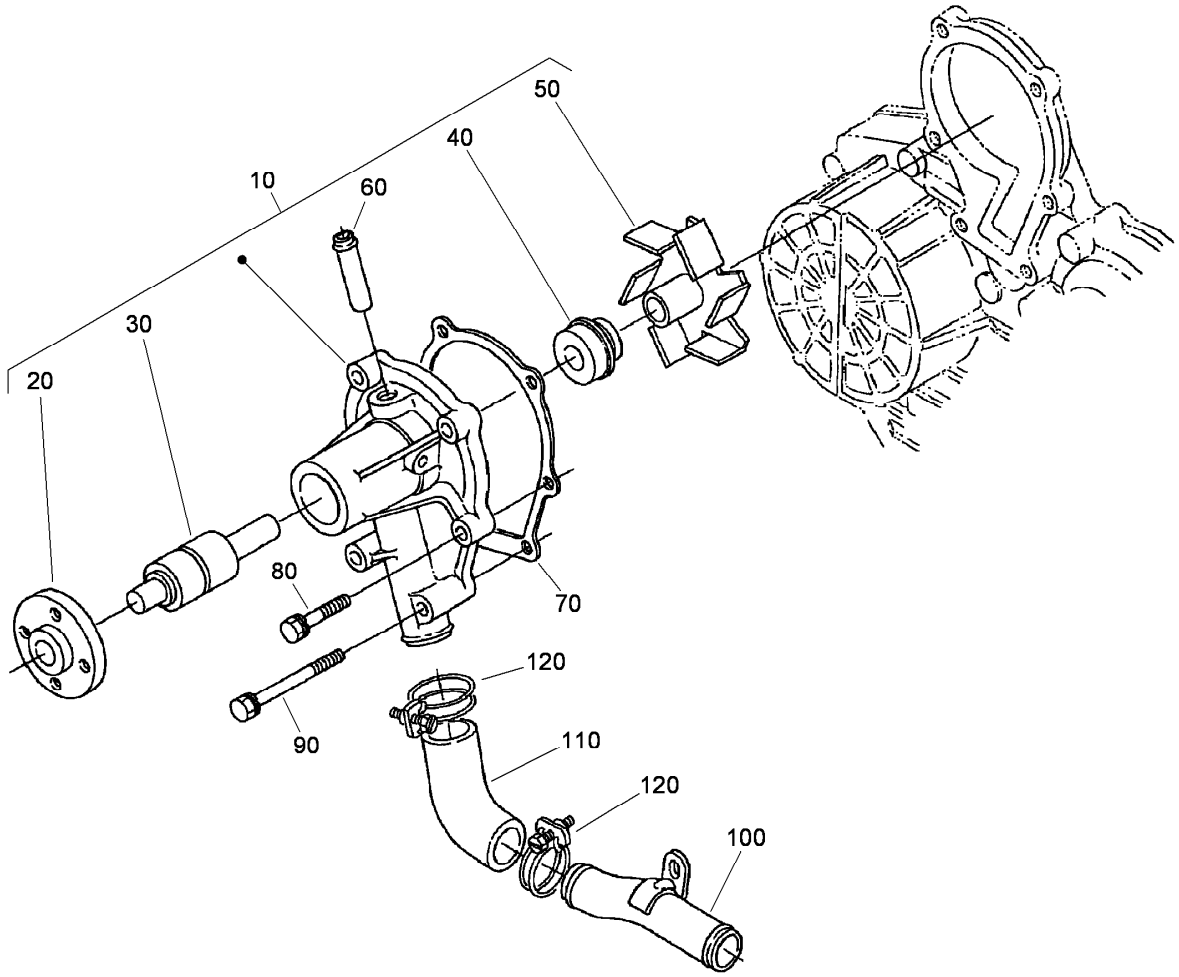

Water Pump Assembly

Ref.	*Part Number*	*Qty.*	*Description*
10	107-9089	1	Water Pump ASM
20	99-3516	4	Flange-Pump, Water
30	99-3517	1	Bearing-Pump, Water
40	105-3750	1	Mechanical Seal ASM
50	112-8403	1	Impeller ASM
60	100-1932	1	Pipe-Return, Water
70	99-3454	1	Gasket-Pump, Water
80	98-9353	4	Bolt
90	107-9090	2	Bolt
100	98-9716	1	Pipe-Water
110	107-9091	1	Pipe-Water
120	98-9717	2	Clamp

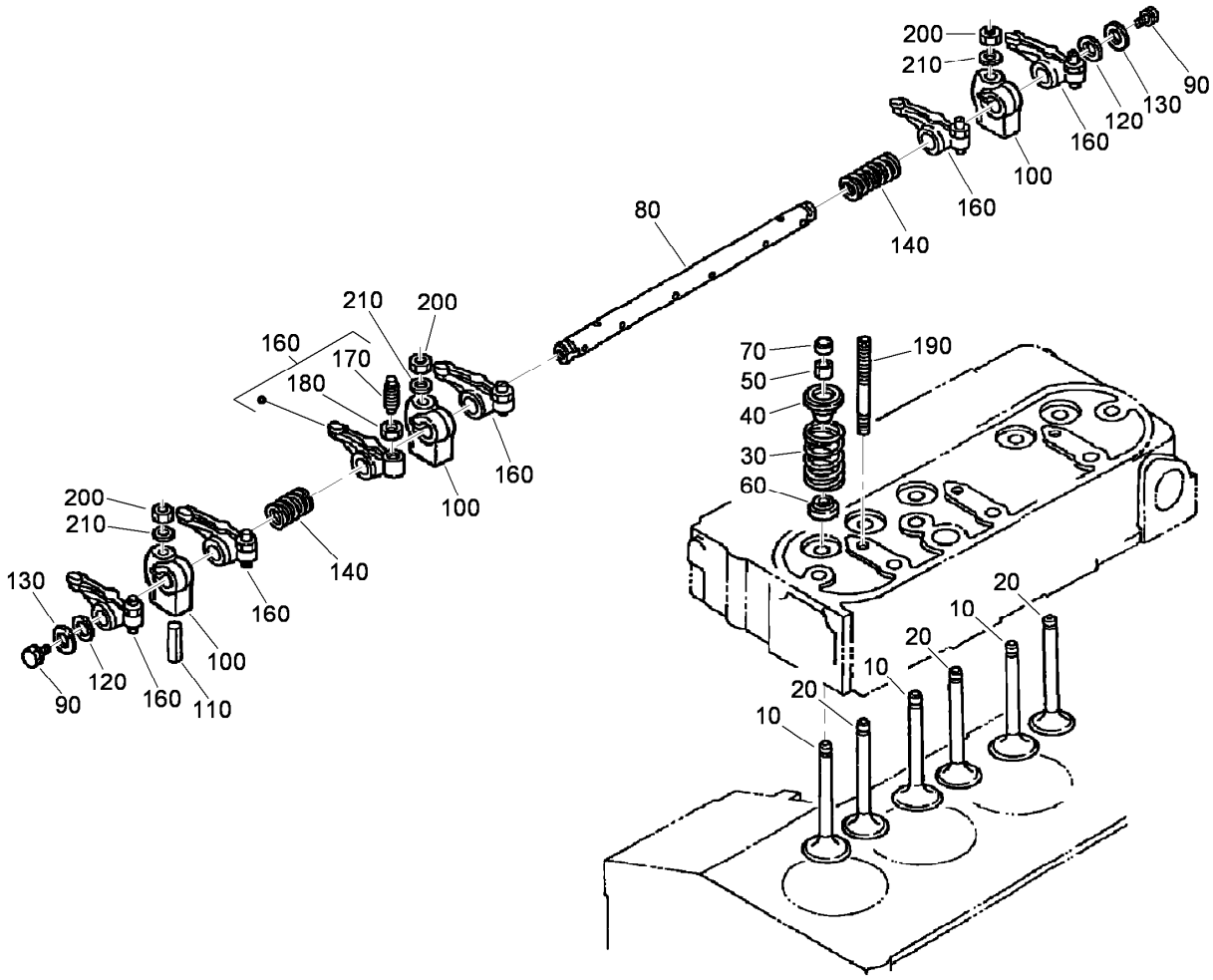

Valve and Rocker Arm Assembly

Ref.	Part Number	Qty.	Description
10	112-7018	3	Valve-Inlet
20	98-9495	3	Valve-Exhaust
30	98-9648	6	Spring-Valve
40	107-9092	6	Retainer-Spring
50	98-9390	6	Collet-Spring, Valve
60	99-8385	6	Seal-Stem, Valve
70	98-9497	6	Cap-Valve
80	105-3790	1	R-Arm Shaft ASM
90	100-9265	2	Bolt
100	98-9505	3	Bracket-Arm, Rocker
110	105-3758	1	Pin-Spring
120	98-9507	2	Washer-Shaft, R-Arm
130	3256-1	2	Washer-Flat
140	98-9504	2	Spring-Arm, Rocker
160	98-9501	6	Rocker Arm ASM
170	98-9502	6	Screw-Adjusting
180	98-9503	6	Nut
190	98-9506	3	Stud
200	98-9393	3	Nut
210	98-9385	3	Washer-Flat

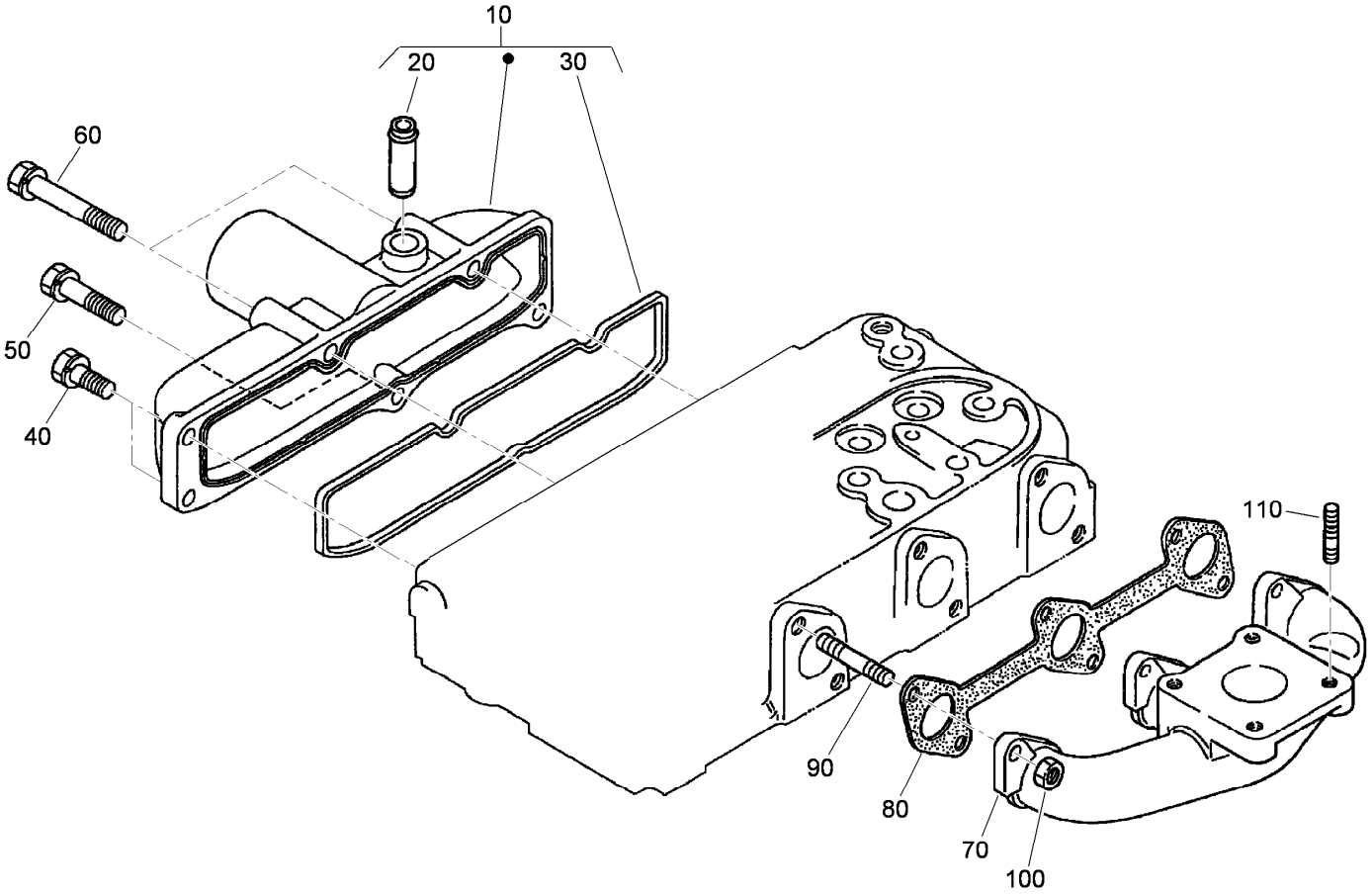

Inlet and Exhaust Manifold Assembly

Ref.	*Part Number*	*Qty.*	*Description*
10	108-6577	1	Inlet Manifold ASM
20	98-9492	1	Joint-Pipe, Breather
30	98-9609	1	Gasket-Manifold, Inlet
40	98-7605	3	Bolt
50	98-9353	1	Bolt
60	105-3797	2	Bolt
70	107-9093	1	Manifold-Exhaust
80	99-8327	1	Gasket-Manifold, Exhaust
90	98-9588	6	Stud
100	98-9665	6	Nut
110	98-7769	4	Stud

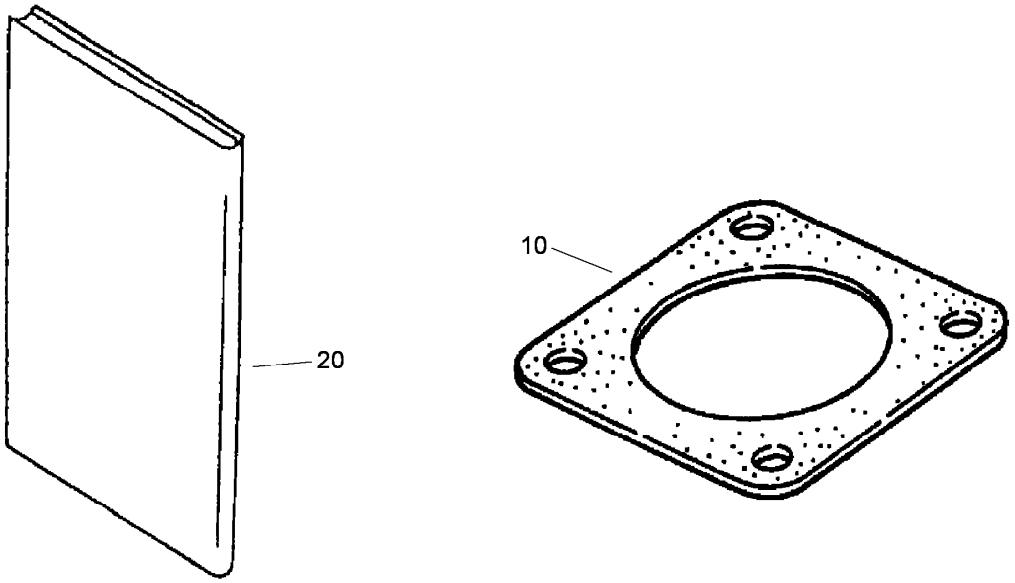

Muffler Gasket and Operator Manual

Ref.	*Part Number*	*Qty.*	*Description*
10	99-8343	1	Gasket-Muffler
20	99-8954	1	Manual-Kubota

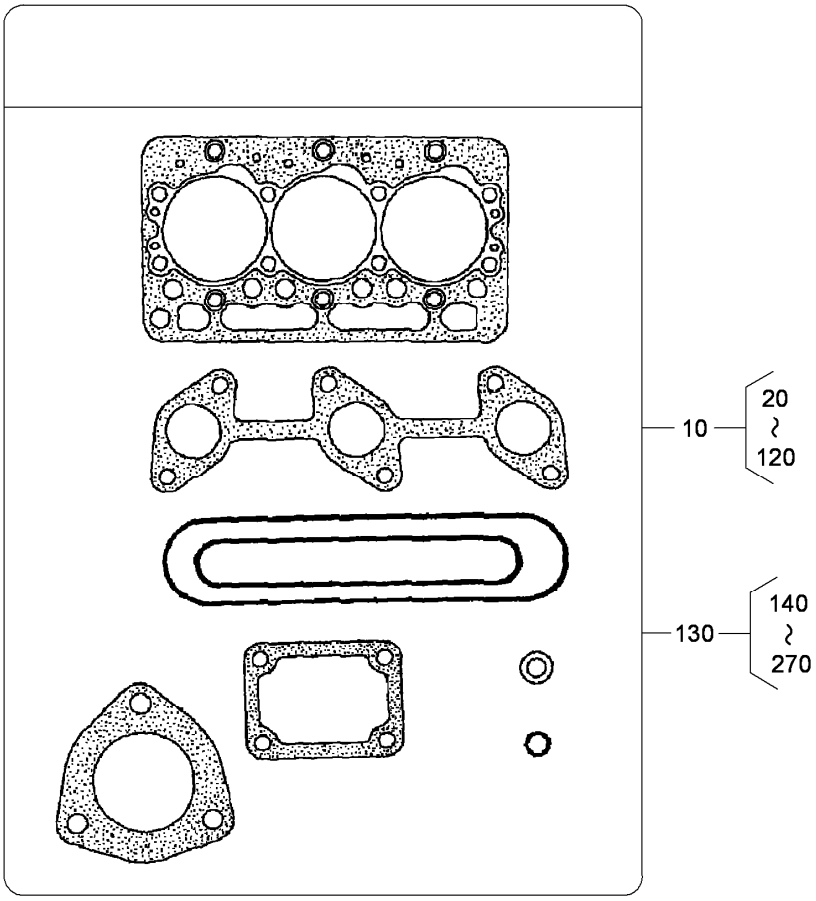

Upper and Lower Gasket Kits

Ref.	*Part Number*	*Qty.*	*Description*
10	107-7848	1	Upper Gasket Kit
130	107-9095	1	Lower Gasket Kit

Attachments and Accessories

For 30344 Groundsmaster 3280-D Traction Unit

Product Name	Model/Part
Premium Engine Oil, 10w30 (55 Gallon Drum)	108-1179
Premium Engine Oil, 10w30 (5 Gallon Pail)	108-1180
Premium Engine Oil, 15w40 (55 Gallon Drum)	108-1181
Premium Engine Oil, 15w40 (5 Gallon Pail)	108-1182
Premium Transmission/Hydraulic Tractor Fluid (55 Gallon Drum)	108-1183
Premium Transmission/Hydraulic Tractor Fluid (5 Gallon Pail)	108-1184
Premium All Purpose Grease (Tube)	108-1190
Armrest Adapter Kit	108-9687
Wheel Weight Kit	11-0440
Auxiliary Valve Kit	110-5670
Implement Flow Control Kit	110-5699
Blower Drive and Mounting Kit	110-8539
Attachment Frame Kit	110-8540
5 Inch Air Cleaner Safety Element	114-4057
Snowthrower Drive and Mounting Kit	114-4140
V-Plow Mounting Kit	115-4917
Mounting Kit (for Model 30823)	115-4929
Model 2670 Debris Blower Mounting Kit (2XX)	115-4932
Model 2670 Debris Blower Mounting Kit (3XX)	115-4935
Wheel	119-2863
Wheel and Tire ASM	119-2864
Tire	231-95
Rear Weight Kit	24-5780
400-Hour Filter Maintenance Kit	30051
Mechanical Seat Suspension Kit	30312
Pneumatic Seat Suspension Kit	30313
15 Cubic Foot Bagger Kit	30356
60 Inch Blower Kit	30357
Bimini Sunshade for 2-Post Roll-Over Protection System	30358
Hardtop Sunshade	30359
60 Inch Side Discharge Mower	30366
72 Inch Side Discharge Mower	30368
Auxiliary Power Unit	30382
Cab ASM	30391
Standard Seat Kit	30398
62 Inch Base Mower	30403
72 Inch Base Mower	30404
52 Inch Blower Kit	30502
62 Inch Blower Kit	30506
62 Inch Side Discharge Deck	30551
52 Inch Side Discharge Mower	30555
Arm Rest Kit	30707
48 Inch V-Plow	30750
Debris Blower	30823
Tire	69-9880
Spark Arrestor Screen	75-6880
Weight-Wheel	77-6700

Tire Chains (23 x 9.50-12) 82531

Notes:

Notes:

TORO®

Count on it.