Form No. 3370-278 Rev A

TORO®

Count on it.

Parts Catalog

Super Recycler® Lawn Mower

Model No. 20095C—Serial No. 311000001 and Up

Ordering Replacement Parts

To order replacement parts, please supply the part number, the quantity, and the description of each part desired.

Understanding Reference Numbers

Each identified part in an illustration has a reference number. The reference number for a part also appears in the parts list, along with other information about the part.

This catalog uses two special reference number formats, one to indicate parts in a service assembly and another to indicate the quantity of a given part in an illustration.

Service Assembly Reference Numbers

Parts in service assemblies have reference numbers in the form a:b. The a represents the reference number of the entire service assembly and the b represents a sequential number unique to each part within the service assembly.

For example, a wheel assembly might be identified by reference number 6, the tire by 6:1, the valve by 6:2, and the wheel by 6:3. When you order the assembly identified by reference number 6, you receive all parts identified by reference numbers 6:1,6:2, and 6:3. However, you may also order any part individually. Reference numbers of this type appear in illustration and in parts lists.

Reference Numbers Indicating Quantity

In an illustration, if a reference number indicates more than one part, the reference number has the form nX y. The n represents the quantity of the part, the X is the multiplication symbol, and the y represents the reference number.

For example, in an illustration, the reference number 2X 37 means that two of the parts identified by reference number 37 are indicated.

List of Abbreviations

AR: as required

ASM: assembly

BBC: blade brake control

BHTF: button head thread forming

CARR: carriage

CCW: counter clockwise

CW: clockwise

DEG: degrees

DPA: Dual Point Adjustment

ECM: electronic control module

EXT: external

FH: flat head

GA: gauge

HD: heavy-duty

HF: hex flange

HH: hex head

HHF: hex head flange

HHFTF: hex head flange thread forming

HJ: hex jam

HLH: hex lag head

HOC: height-of-cut

HSBH: hex socket button head

HSFH: hex socket flat head

HSH: hex socket head

HWH: hex washer head

HWHTF: hex washer head thread forming

HYD: hydraulic

LH: left hand

LP: Liquid Propane

NI: nylon insert

NPTF: national pipe thread fine

PFH: phillips flat head

PPH: phillips pan head

PPHTF: phillips pan head thread forming

PRH: phillips round head

PTH: phillips truss head

PTO: power-take-off

RH: right hand

ROPS: roll-over protection system

RRB: rear roller brush

SFH: slotted fillister head

SHH: slotted hex head

SHWH: slotted hex washer head

SPH: slotted pan head

SQH: square head

SRH: slotted round head

STD: standard

TAP: self tapping

TTH: torx truss head

© 2011—The Toro® Company
8111 Lyndale Avenue South
Bloomington, MN 55420

Contact us at www.Toro.com.
Printed in the USA.
All Rights Reserved

Contents

Housing and Rear Door Assembly 4
Housing Assembly No. 115-2855 5
Front Wheel and Height-of-Cut Assembly 6
Transmission, Rear Wheel and Height-of-Cut Assembly 7
Engine and Blade Assembly 8
Handle Assembly 9
Battery and Harness Assembly 10
Rear Bag Assembly 11
Attachments and Accessories 12

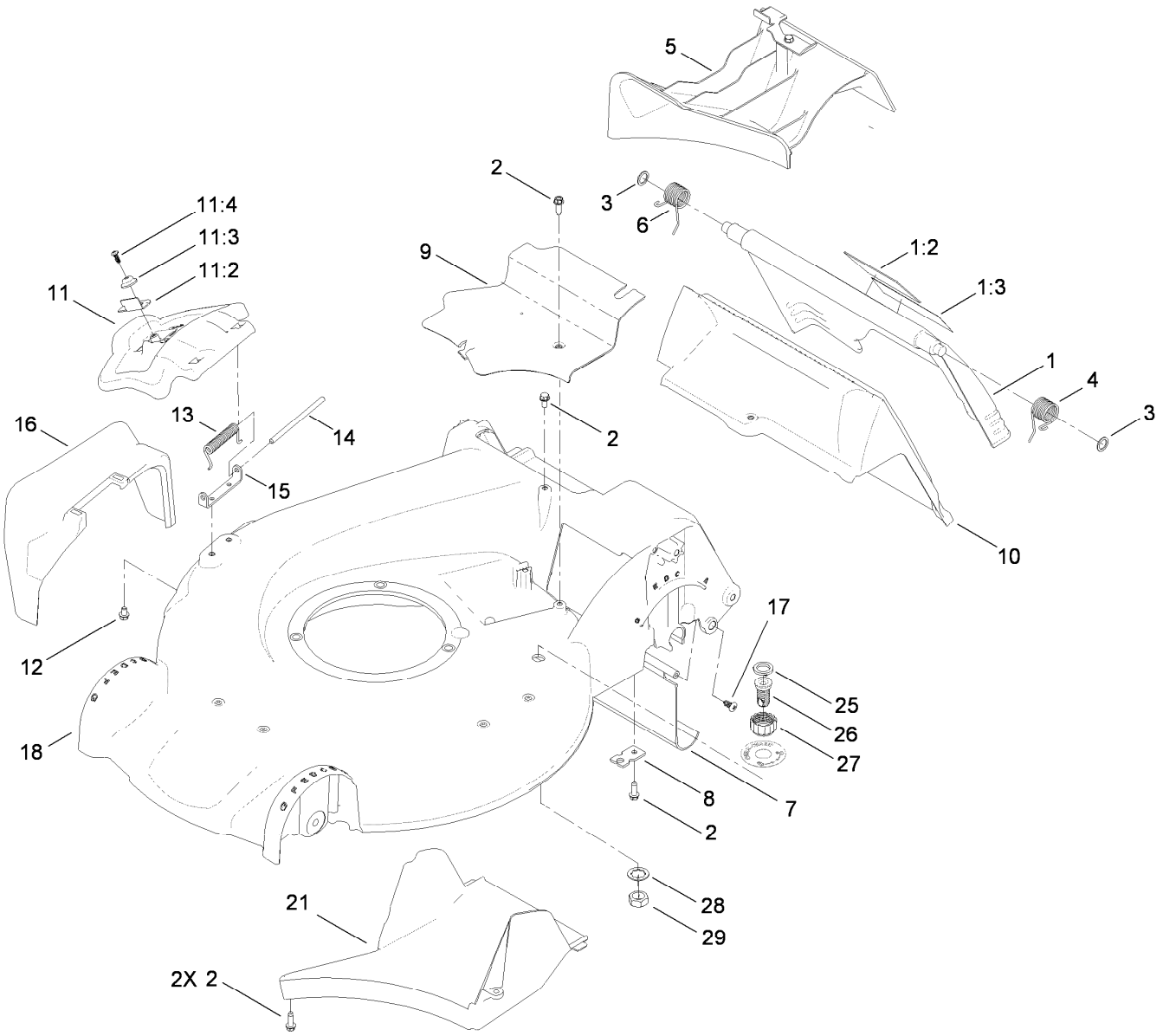

Housing and Rear Door Assembly

Ref.	Part Number	Qty.	Description
1	115-2856	1	Rear Door ASM
1:2	114-7982	1	Decal-Warning
1:3	104-7908	1	Decal-Warning
2	49-2040	5	Screw-HWHTF
3	94-8196	2	Washer-Nylon
4	115-2859	1	Spring-Torsion
5	115-8413	1	Mulch Plug ASM
6	114-7924	1	Spring-Torsion
7	114-1586	1	Shield-Trailing
8	107-7497	1	Bracket-Cable, Traction
9	107-7494	1	Cover-Belt
10	114-2668	1	Chute
11	107-3717	1	Discharge Door ASM
11:2	107-0795	1	Latch-Door
11:3	107-7456	1	Cap-Door

Ref.	Part Number	Qty.	Description
11:4	107-7461	1	Screw-Plastite
12	99-8445	2	Screw-HWH, Taptite
13	99-5293	1	Spring-Torsion
14	99-5291	1	Rod-Cover
15	112-6416	1	Bracket-Cover
16	108-3753	1	Chute-Discharge, Side
17	117-1092	2	Screw-PTH
18	115-2855	1	Housing ASM
21	107-7495	1	Tunnel-Discharge
25	112-6438	1	Washer-Seal, Washout Port
26	112-6400	1	Port-Washout
27	112-6401	1	Coupling-Hose, Washout Port
28	3254-5	1	Washer-Tooth, Internal
29	3218-6	1	Nut-Jam

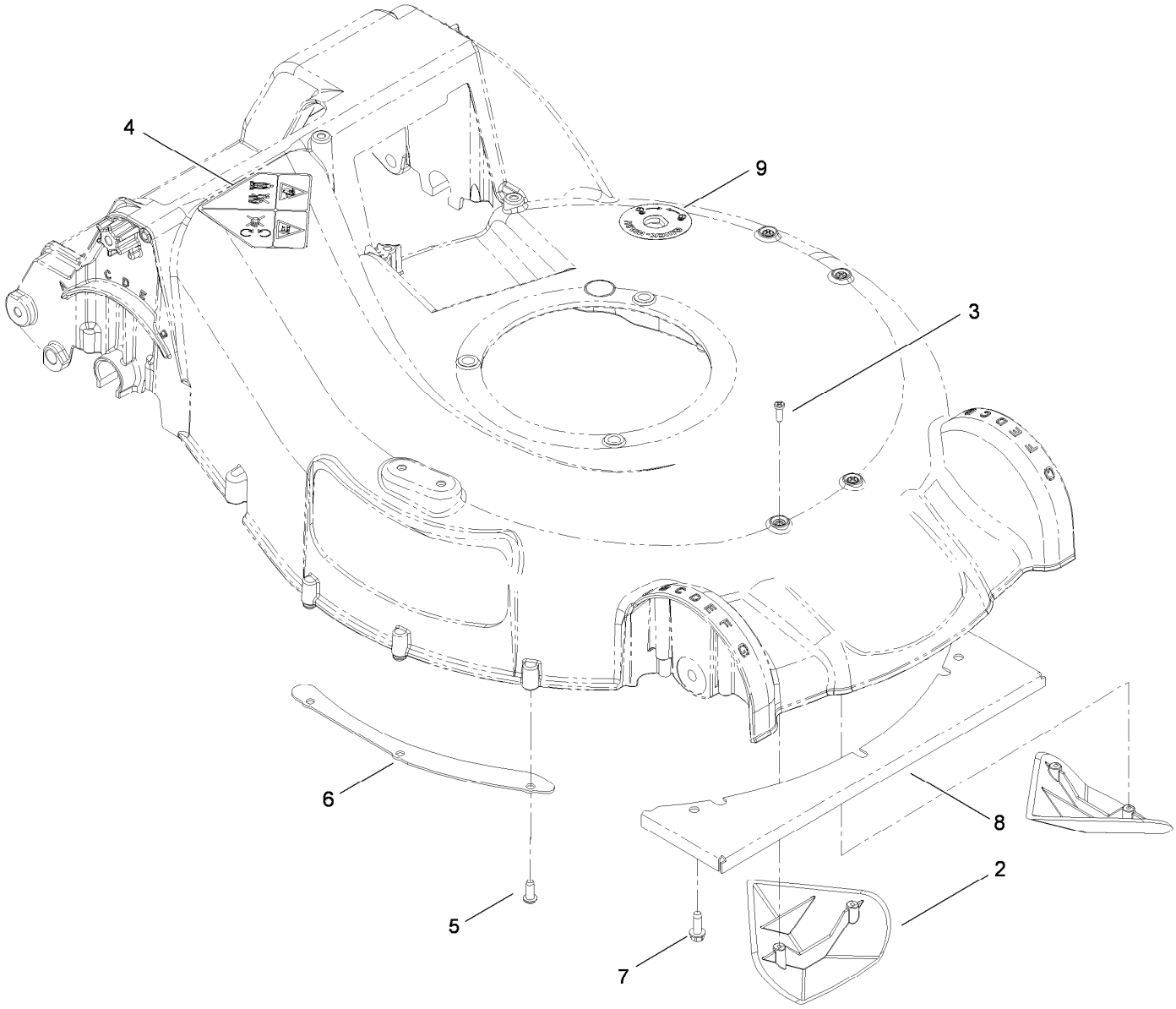

Housing Assembly No. 115-2855

Ref.	*Part Number*	*Qty.*	*Description*
2	108-3798	2	Kicker-Housing
3	32144-111	4	Screw-PPH
4	112-8760	1	Decal-Danger
5	63-8590	3	Screw
6	105-1316-03	1	Sheet-Lip
7	49-2040	3	Screw-HWHTF
8	108-3797-03	1	Plate-Cover, Front
9	112-8867	1	Decal-Port, Washout

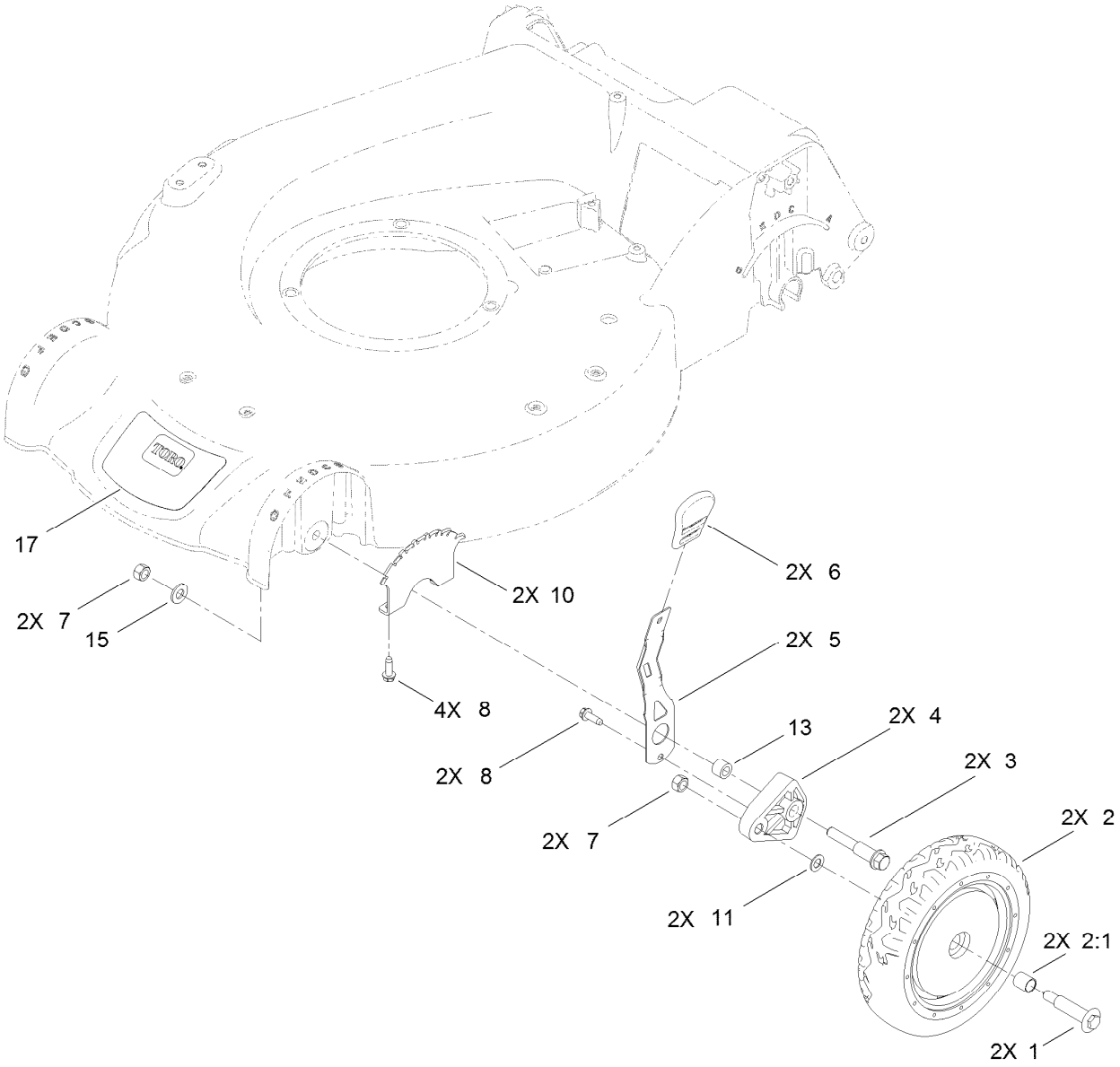

Front Wheel and Height-of-Cut Assembly

Ref.	*Part Number*	*Qty.*	*Description*
1	92-1057	2	Bolt-Shoulder
2	107-3708	2	Wheel ASM
2:1	27-6250	2	Bushing
3	114-3467	2	Screw-Shoulder
4	107-7492	2	Arm-Pivot
5	107-7491	2	Arm-Spring
6	110-0549	2	Knob-HOC
7	603773	4	Nut
8	49-2040	10	Screw-HWHTF
10	107-7478	4	Plate-HOC
11	40-1940	2	Washer
13	52-2480	2	Spacer-Wheel
15	3256-24	2	Washer-Flat
17	119-3806	1	Decal-Housing

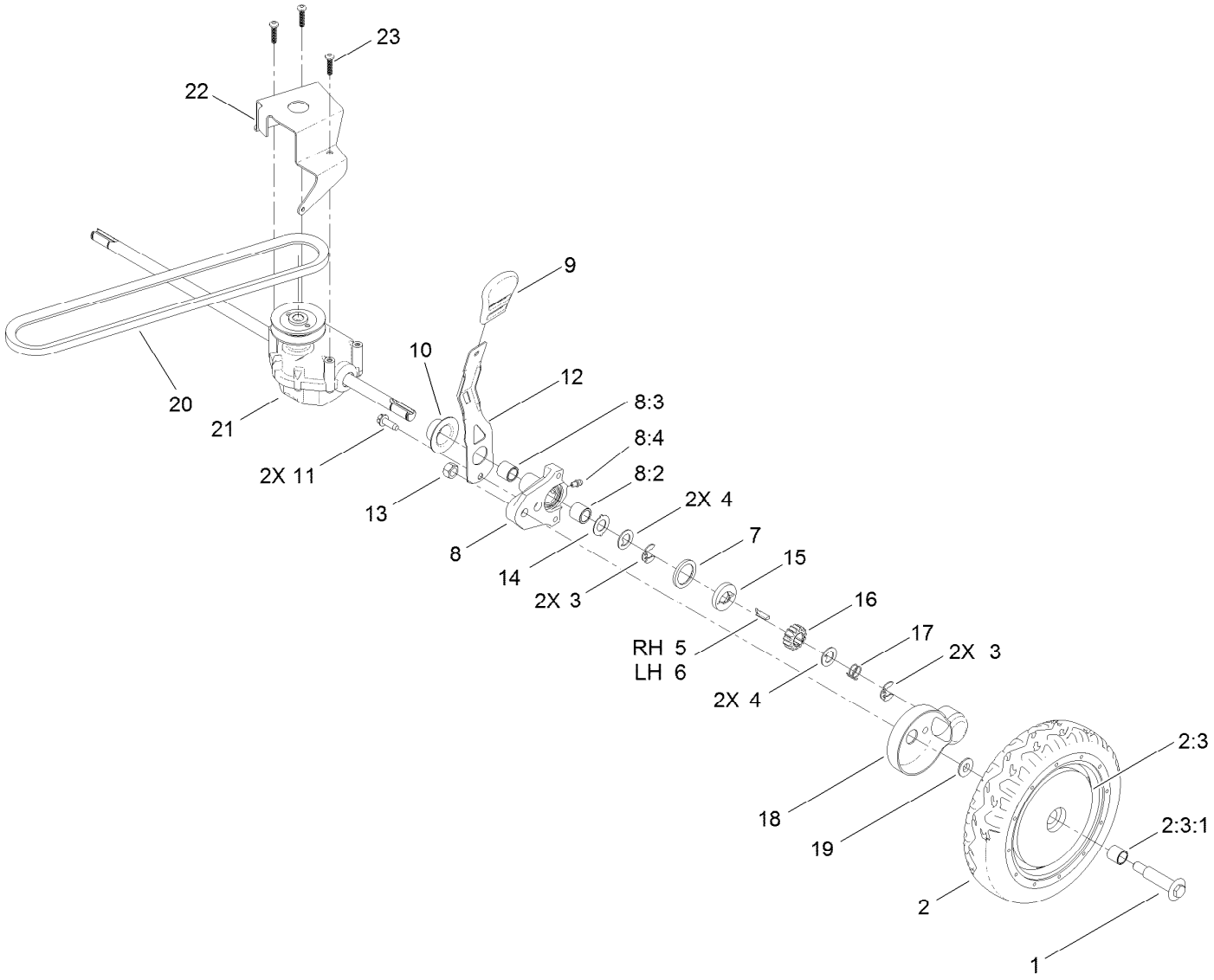

Transmission, Rear Wheel and Height-of-Cut Assembly

Ref.	Part Number	Qty.	Description
1	92-1057	2	Bolt-Shoulder
2	107-3709	2	Wheel Gear ASM
2:3		1	Wheel ASM ■
2:3:1	27-6250	2	Bushing
3	65-2720	4	Ring-Clip, Locking
4	65-4740	4	Washer-Thrust, Keyed
5	66-6040	1	Key-Rocking, RH ●
6	66-6050	1	Key-Rocking, LH
7	65-4710	2	Ring-Friction
8	100-8774	2	Pivot Arm ASM
8:2	47-2900	1	Bushing
8:3	70-9760	1	Bushing
8:4	302-56	1	Fitting-Grease
9	110-0549	2	Knob-HOC

Ref.	Part Number	Qty.	Description
10	42-3520	2	Cap-End
11	49-2040	2	Screw-HWHTF
12	107-7491	2	Arm-Spring
13	603773	2	Nut
14	65-4730	2	Washer-Arm, Pivot
15	65-4760	2	Washer-Clutch
16	65-4750	2	Gear-Pinion
17	65-4720	2	Spring-Compression
18	74-1660	2	Cover-Wheel
19	74-1671	2	Spacer-Cover, Wheel
20	92-1043	1	V-Belt
21	115-4560	1	Transmission ASM
22	114-7977-03	1	Bracket-Transmission
23	108-7476	3	Screw-Plastite

● Not illustrated

■ Not serviced separately

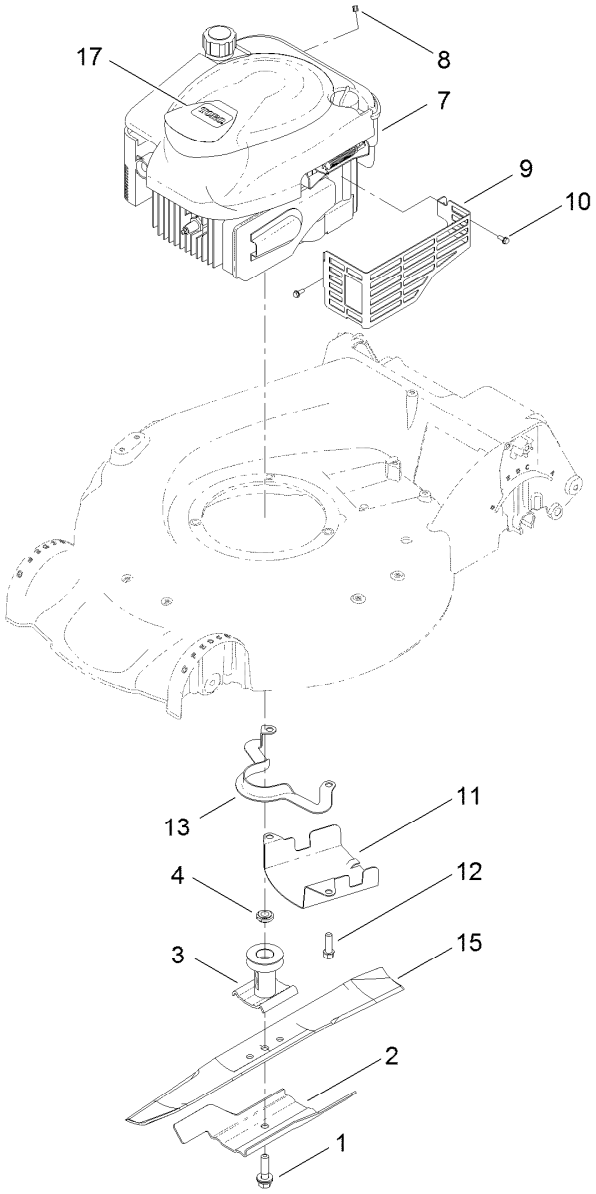

Engine and Blade Assembly

Ref.	*Part Number*	*Qty.*	*Description*
1	105-8579	1	Bolt-Blade
2	105-6848-03	1	Accelerator-Blade
3	106-3987	1	Blade Driver ASM
4	106-3999	1	Spacer-Driver
7		1	Engine-Briggs, 128T07-5238-B1 ●■
8	2210-316	1	Stop-Rope
9	104-7577-03	1	Shield-Muffler
10	32144-1	3	Screw-Taptite
11	107-7489-03	1	Shield-Grass
12	95-1727	3	Screw-Taptite
13	108-8110-03	1	Guide-Belt
15	108-3762-03	1	Blade-Recycling
17	119-3782	1	Decal-Shroud

● Not serviced separately

■ Obtain parts from www.briggsandstratton.com

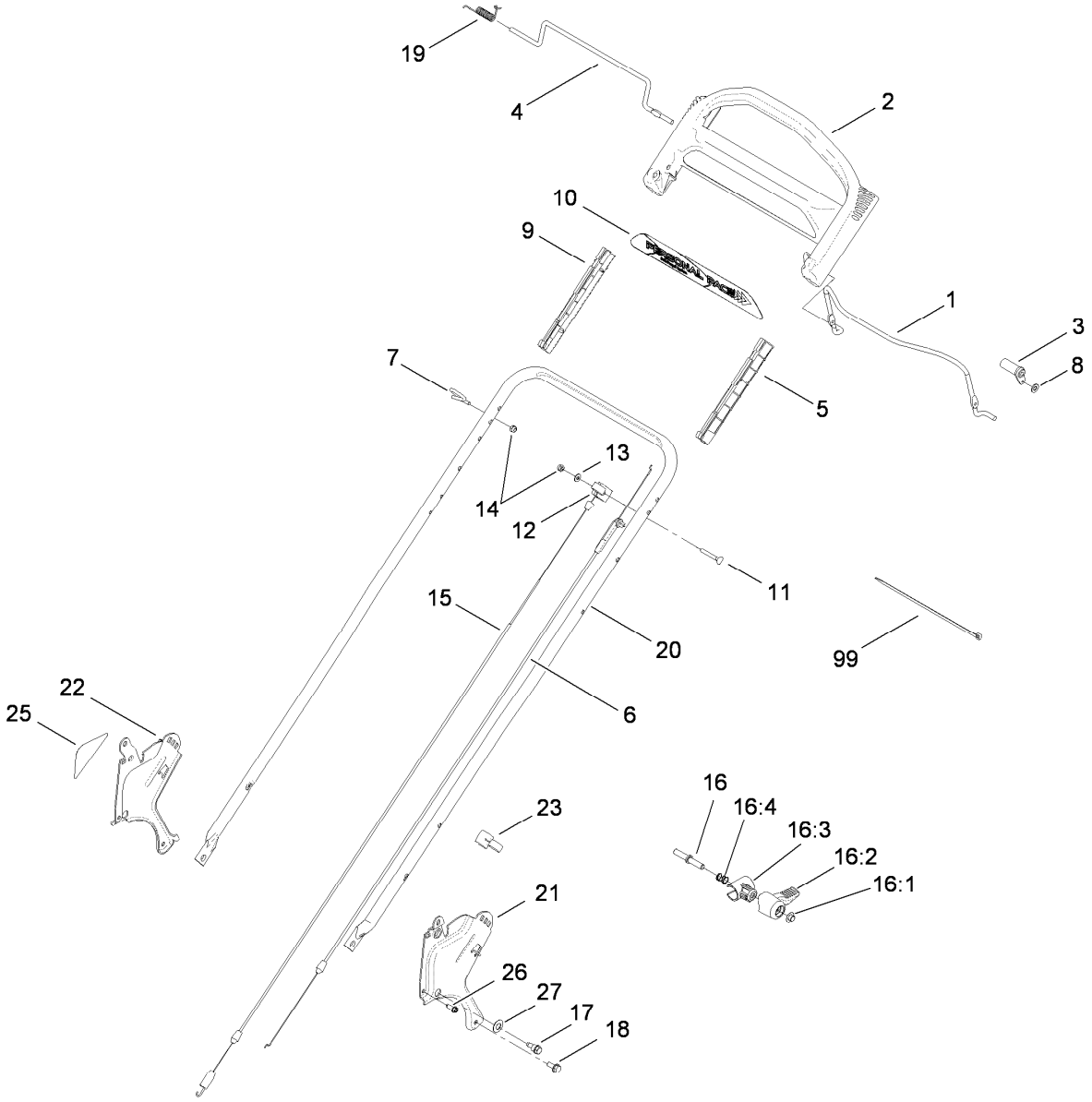

Handle Assembly

Ref.	Part Number	Qty.	Description
1	104-8679-03	1	Bail-Brake
2	104-8678	1	Handle-Control
3	99-1589	1	Lever-Traction
4	99-1588	1	Bar-Control, Traction
5	105-6842	1	Guide-LH
6	117-5900	1	Cable-Brake
7	86-9671	1	Guide-Rope
8	3256-23	1	Washer-Flat
9	105-6841	1	Guide-RH
10	117-1019	1	Decal
11	321-50	1	Screw-HH
12	99-5239	1	Anchor-Cable
13	3256-1	1	Washer-Flat
14	3296-73	2	Nut-Lock, NI
15	108-8158	1	Cable-Traction
16	115-2860	2	Quick Release ASM

Ref.	Part Number	Qty.	Description
16:1	109-0917	1	Nut-Push
16:2	114-7995	1	Lever
16:3	114-7996	1	Anchor-Spring
16:4	115-2858	1	Spring-Compression
17	115-1958	2	Bolt-Shoulder
18	32144-11	2	Screw-HWHTF
19	104-8690	1	Spring-Torsion
20	115-1300-05	1	Handle
21	114-2671-03	1	Bracket-Handle, LH
22	114-2672-03	1	Bracket-Handle, RH
23	114-7988	1	Guide-Cable
25	115-2884	1	Decal-Instruction
26	49-2040	2	Screw-HWHTF
27	112-9972	2	Washer-Conical, Spring
99	614249	3	Tie-Cable

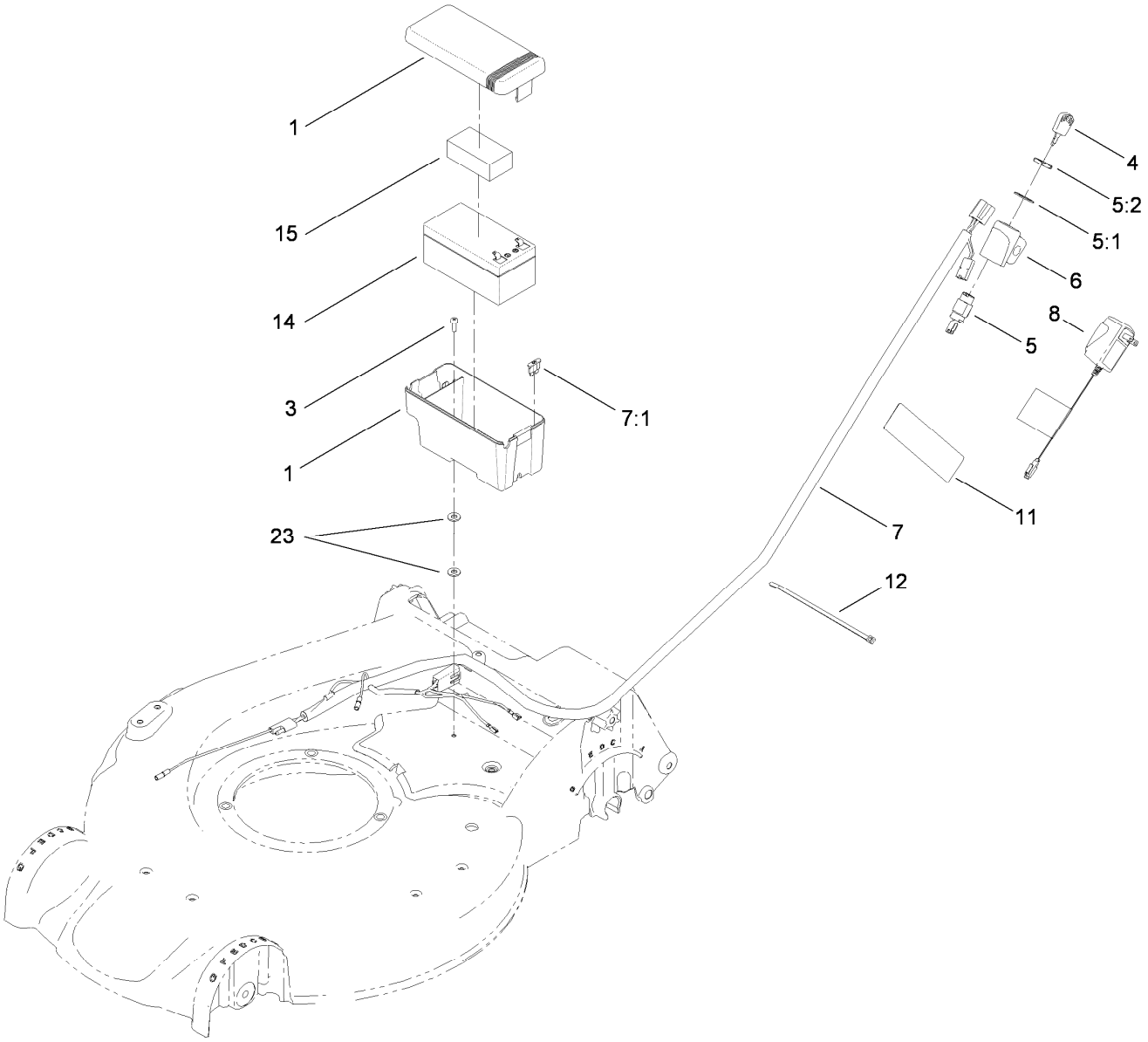

Battery and Harness Assembly

Ref.	*Part Number*	*Qty.*	*Description*
1	108-4844	1	Battery Box ASM
3	32144-32	1	Screw
4	700918	1	Key
5	46-5780	1	Starter Switch ASM
5:1	3254-5	1	Washer-Tooth, Internal
5:2	218-461	1	Nut-HH
6	108-9760	1	Mount-Switch
7	114-2625	1	Harness-Wire
7:1	99-6124	1	Fuse-Blade, 40 Amp
8	114-1588	1	Charger-Battery
11	104-7953	1	Decal
12	614249	2	Tie-Cable
14	106-8397	1	Battery-12 Volt
15	107-3774	1	Foam-Battery, Top
23	3256-22	2	Washer-Flat

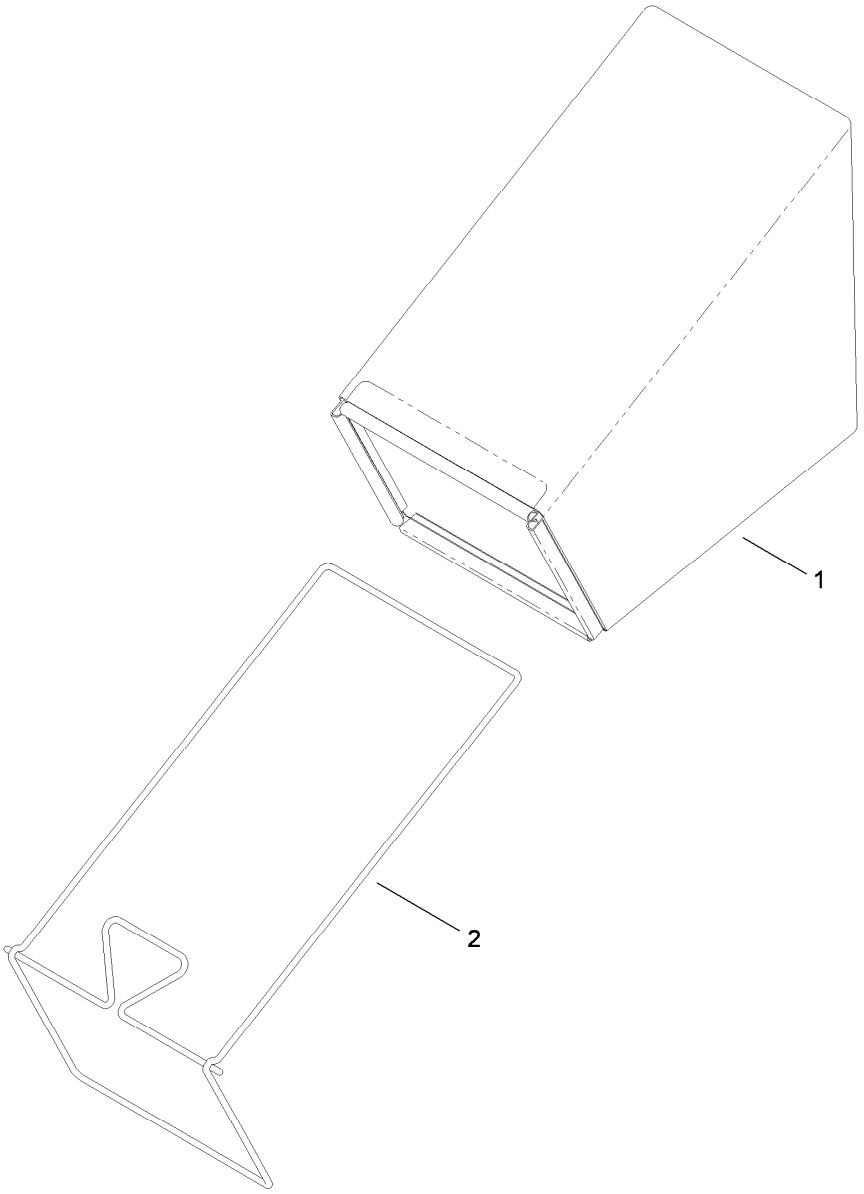

Rear Bag Assembly

Ref.	*Part Number*	*Qty.*	*Description*
1	114-2664	1	Grass Bag ASM
2	114-2679-03	1	Frame-Bag

Attachments and Accessories

For 20095C Super Recycler Lawn Mower

Product Name	Model/Part
Bagging Blade	108-3759-03
Traction Assist Handle Kit	108-8120
Cover-Lawnmower	490-7462
Plain Walk Mower Cover	490-7463

Notes:

Notes:

Notes:



Count on it.