Form No. 3369-502 Rev B

TORO®

Count on it.

Parts Catalog

Power Clear 621 QZE Snowthrower

Model No. 38459—Serial No. 312000001 and Up

Ordering Replacement Parts

To order replacement parts, please supply the part number, the quantity, and the description of each part desired.

Understanding Reference Numbers

Each identified part in an illustration has a reference number. The reference number for a part also appears in the parts list, along with other information about the part.

This catalog uses two special reference number formats, one to indicate parts in a service assembly and another to indicate the quantity of a given part in an illustration.

Service Assembly Reference Numbers

Parts in service assemblies have reference numbers in the form a:b. The a represents the reference number of the entire service assembly and the b represents a sequential number unique to each part within the service assembly.

For example, a wheel assembly might be identified by reference number 6, the tire by 6:1, the valve by 6:2, and the wheel by 6:3. When you order the assembly identified by reference number 6, you receive all parts identified by reference numbers 6:1,6:2, and 6:3. However, you may also order any part individually. Reference numbers of this type appear in illustration and in parts lists.

Reference Numbers Indicating Quantity

In an illustration, if a reference number indicates more than one part, the reference number has the form nX y. The n represents the quantity of the part, the X is the multiplication symbol, and the y represents the reference number.

For example, in an illustration, the reference number 2X 37 means that two of the parts identified by reference number 37 are indicated.

List of Abbreviations

AR: as required

ASM: assembly

BBC: blade brake control

BHTF: button head thread forming

CARR: carriage

CCW: counter clockwise

CW: clockwise

DEG: degrees

DPA: Dual Point Adjustment

ECM: electronic control module

EXT: external

FH: flat head

GA: gauge

HD: heavy-duty

HF: hex flange

HH: hex head

HHF: hex head flange

HHFTF: hex head flange thread forming

HJ: hex jam

HLH: hex lag head

HOC: height-of-cut

HSBH: hex socket button head

HSFH: hex socket flat head

HSH: hex socket head

HWH: hex washer head

HWHTF: hex washer head thread forming

HYD: hydraulic

LH: left hand

LP: Liquid Propane

NI: nylon insert

NPTF: national pipe thread fine

PFH: phillips flat head

PPH: phillips pan head

PPHTF: phillips pan head thread forming

PRH: phillips round head

PTH: phillips truss head

PTO: power-take-off

RH: right hand

ROPS: roll-over protection system

RRB: rear roller brush

SFH: slotted fillister head

SHH: slotted hex head

SHWH: slotted hex washer head

SPH: slotted pan head

SQH: square head

SRH: slotted round head

STD: standard

TAP: self tapping

TTH: torx truss head

© 2011—The Toro® Company
8111 Lyndale Avenue South
Bloomington, MN 55420

Contact us at www.Toro.com.
Printed in the USA.
All Rights Reserved

Contents

Main Frame Assembly 4
Rotor Drive Assembly 5
Rotor Assembly 6
Engine Assembly 7
Electric Start Engine Component Assembly No. 119-1942 8
Shroud Assembly 9
Chute Control Assembly 10
Upper Handle Assembly 11
Handle Chute Control Assembly 12
Attachments and Accessories 13

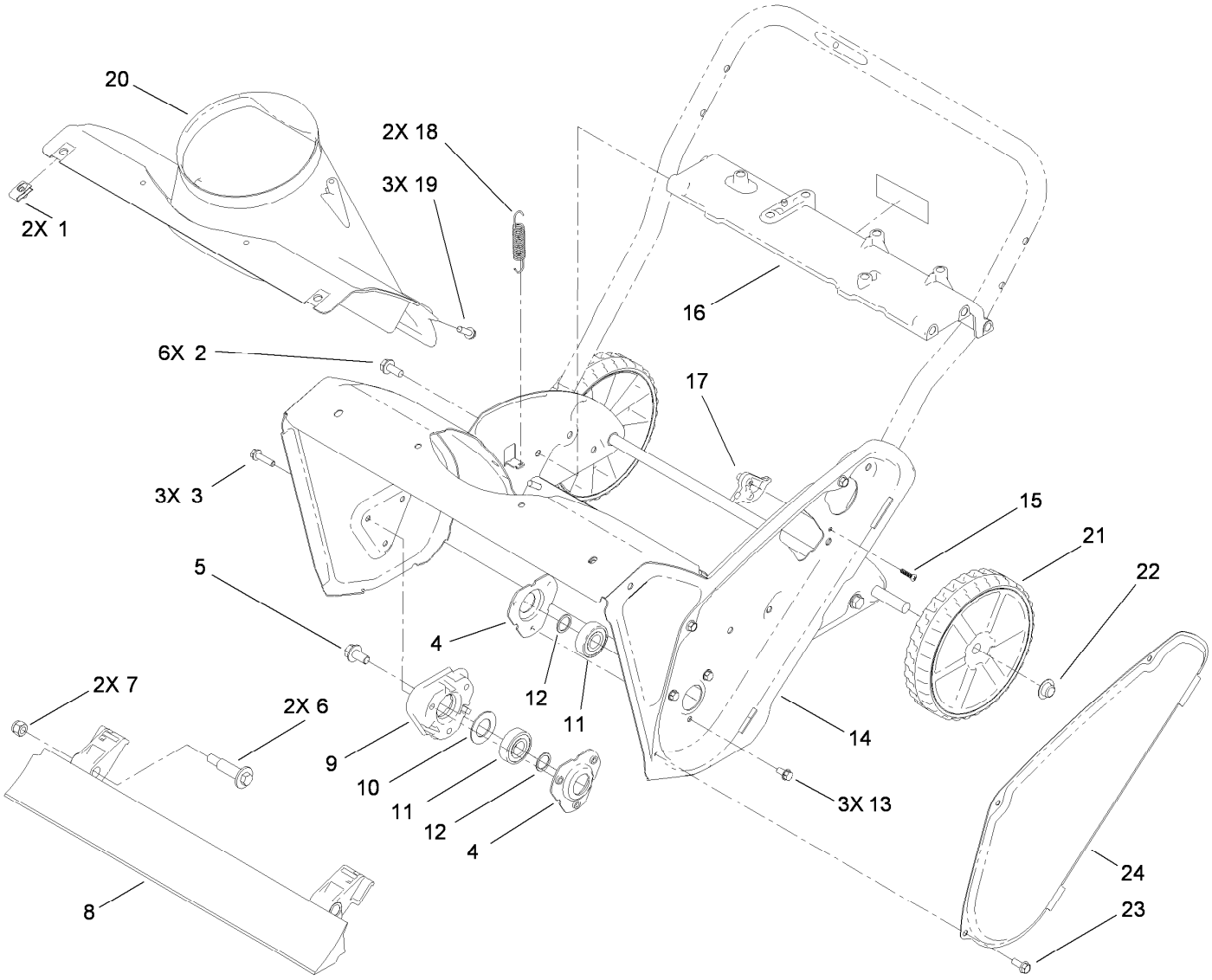

Main Frame Assembly

Ref.	Part Number	Qty.	Description
1	107069	2	Clip
2	32144-11	6	Screw-HWHTF
3	32144-86	3	Screw-HWHTF
4	108-4943	2	Flange-Bearing
5	110-9380	1	Screw-HWH
6	56-6590	2	Bolt-Wheel
7	3296-39	2	Nut-Lock, NI
8	108-4884	1	Blade-Scraper
9	114-3781	1	Spacer-Bearing, RH
10	110-9353	1	Washer-Rubber
11	100-1048	2	Bearing-Ball
12	52-7280	2	Washer-Thrust

Ref.	Part Number	Qty.	Description
13	32144-4	3	Screw-HWH
14	108-4868-03	1	Housing-Auger
15	94-4496	1	Screw-PPH
16	108-4905	1	Brace-Frame
17	108-4919	1	Guide-Cable, Clutch
18	108-4906	2	Spring-Extension
19	46-8091	3	Screw-HWH
20	108-4871	1	Chute-Lower
21	117-2309	2	Wheel ASM
22	32112-14	2	Nut-Push
23	32144-85	3	Screw-HWH
24	108-4893-03	1	Cover-Belt

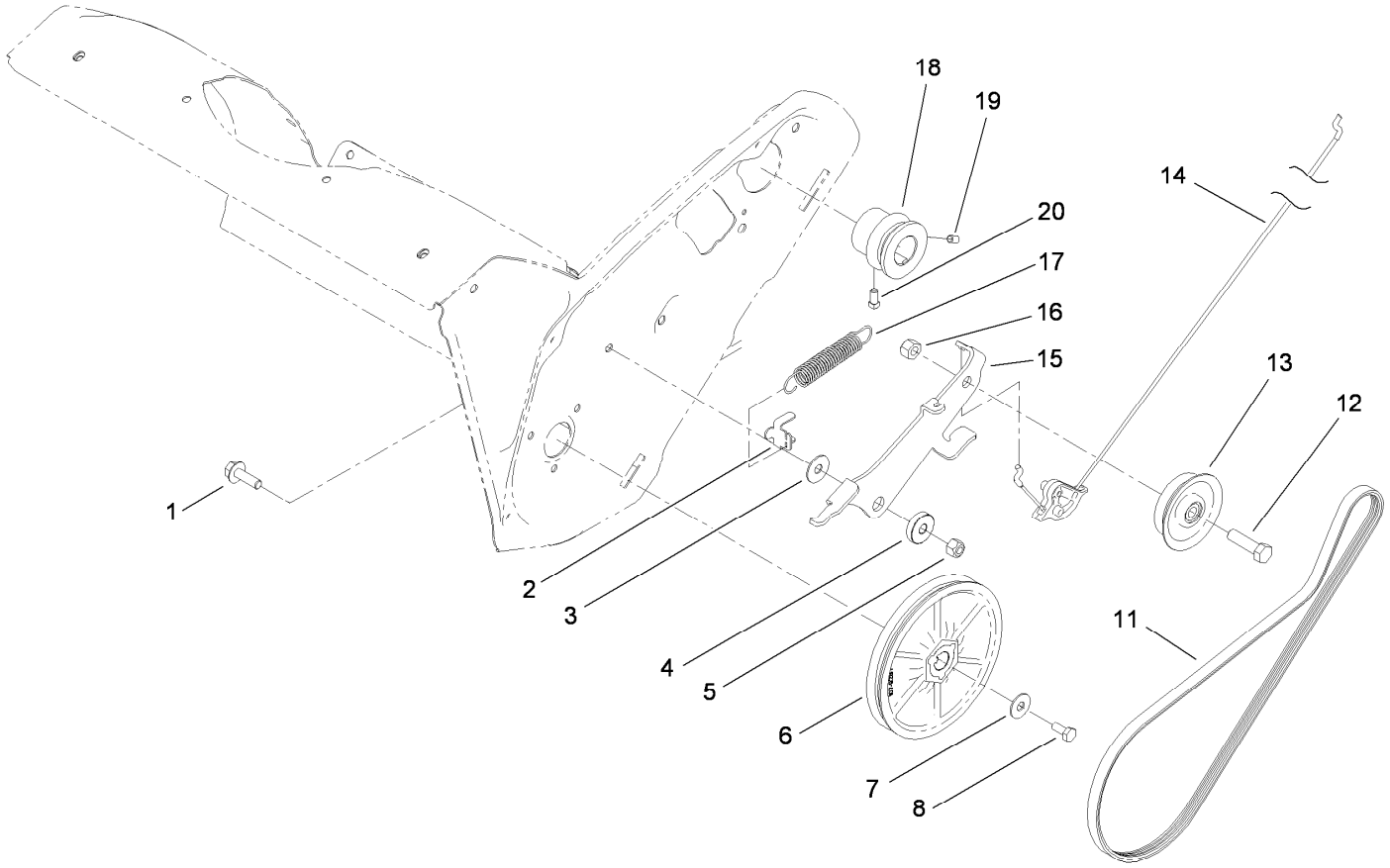

Rotor Drive Assembly

Ref.	Part Number	Qty.	Description
1	3234-29	1	Screw-HHF
2	108-4938	1	Clip-Spring, Brake
3	108-4925	1	Washer
4	108-4916	1	Bushing-Pivot
5	3296-29	1	Nut-Lock, NI
6	107-9287	1	Rotor Pulley ASM
7	3290-456	1	Washer-Belleville
8	110-9381	1	Screw-HH
11	108-4921	1	Belt-Drive

Ref.	Part Number	Qty.	Description
12	323-29	1	Screw-HH
13	114-3785	1	Pulley-Idler
14	115-5682	1	Cable-Clutch
15	114-3782	1	Arm-Idler
16	32152-2	1	Nut-Lock, Cone
17	114-3788	1	Spring-Extension
18	108-4934	1	Pulley-Engine
19	3245-32	1	Screw-HSH
20	3241-7	1	Screw-SQH

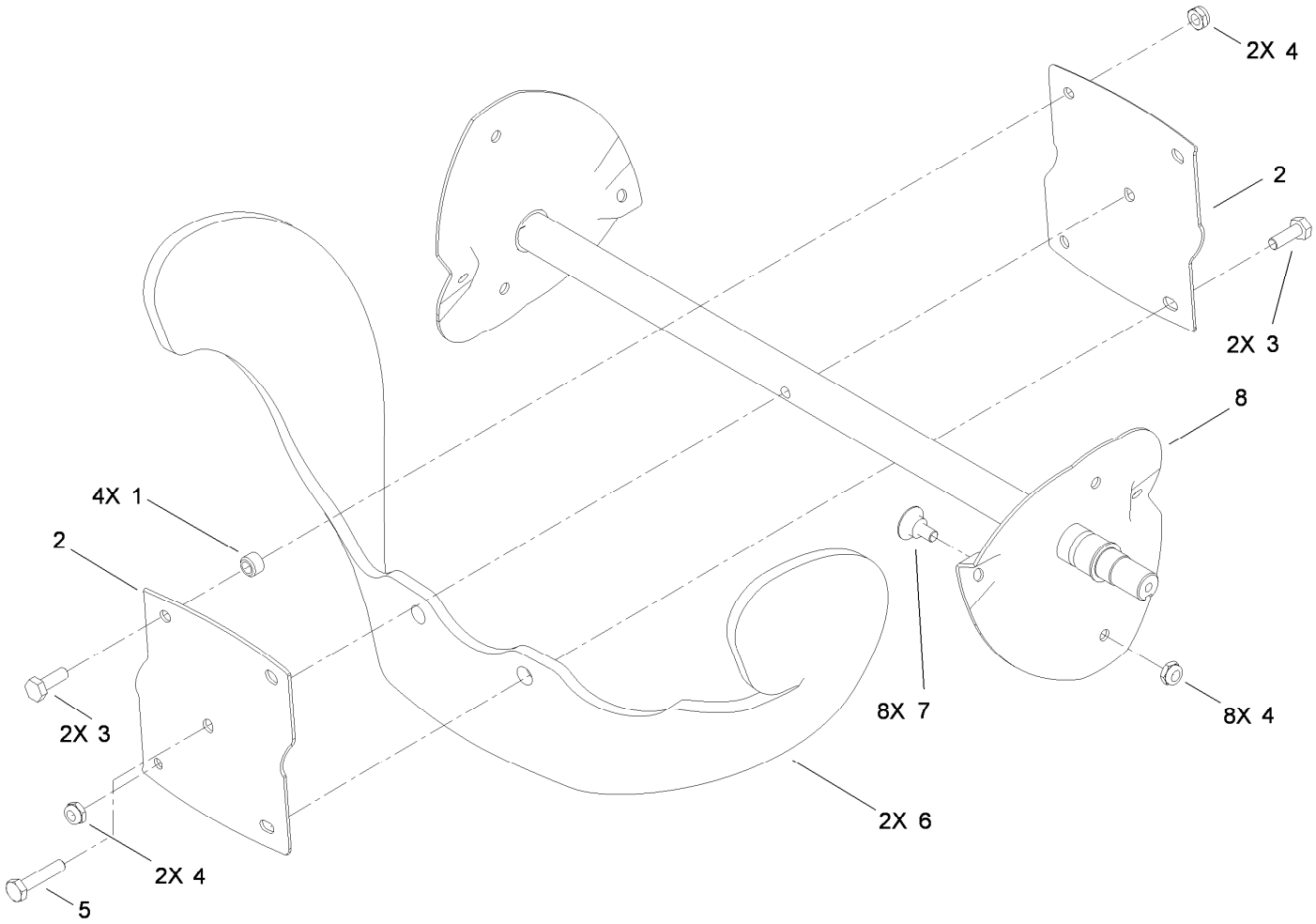

Rotor Assembly

Ref.	*Part Number*	*Qty.*	*Description*
1	55-9370	4	Spacer-Blade, Rotor
2	66-6600-03	2	Half-Rotor
3	321-4	4	Screw-HH
4	3296-56	13	Nut-Lock, NI
5	321-8	1	Screw-HH
6	99-9313	2	Blade-Rotor
7	84-1971	8	Screw
8	108-4894-03	1	Rotor

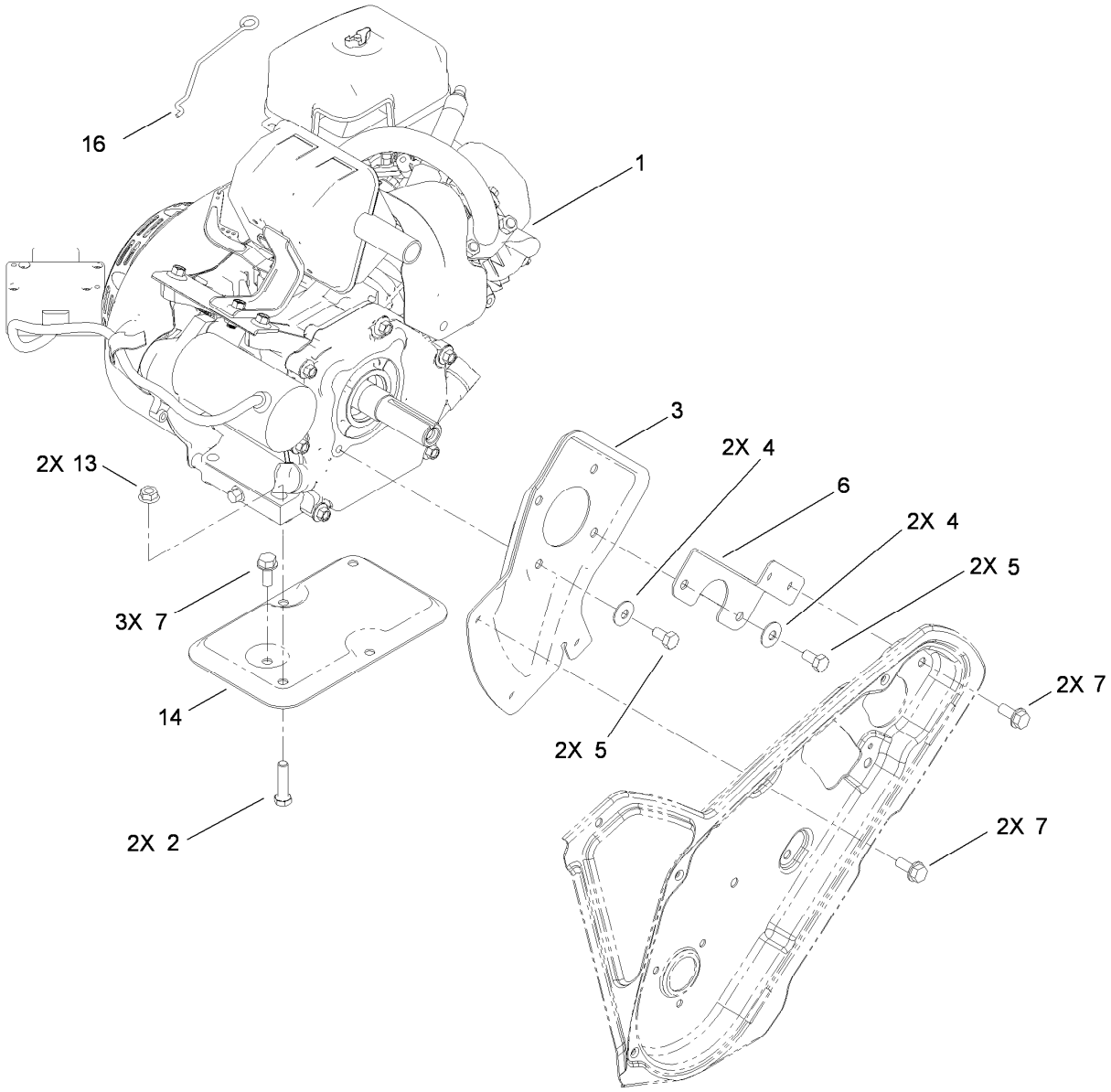

Engine Assembly

Ref.	*Part Number*	*Qty.*	*Description*
1	119-1942	1	Engine-Lc168Fds-1
2	322-17	2	Screw-HH
3	108-4892-03	1	Plate-Engine, PTO
4	3290-456	4	Washer-Belleville
5	33104-016	4	Screw-HHF
6	110-9354-03	1	Support-Engine, Side
7	32144-11	7	Screw-HWHTF
13	32128-20	2	Nut-HF
14	117-6037-03	1	Support-Engine
16	117-6040	1	Link-Knob, Choke

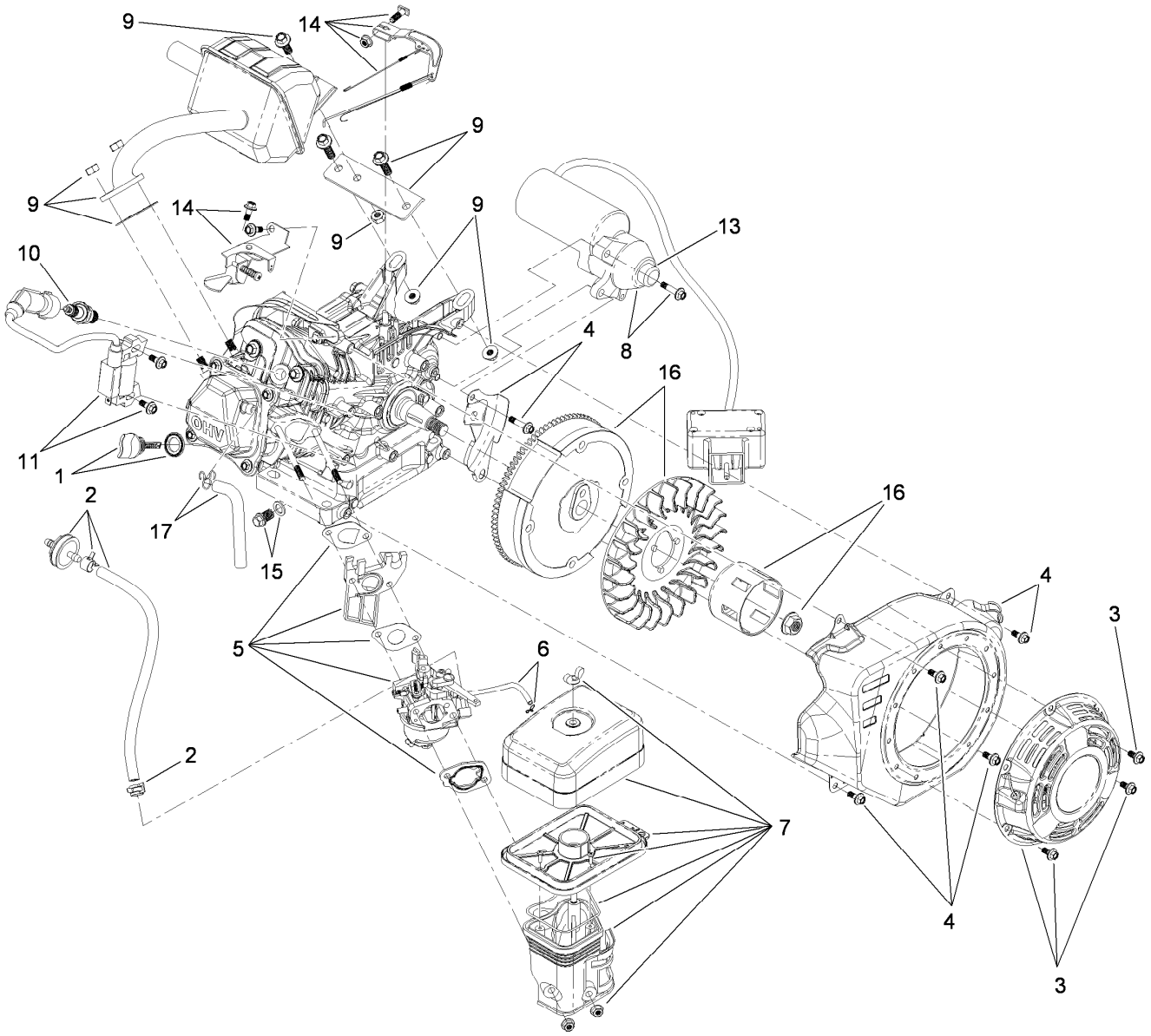

Electric Start Engine Component Assembly No. 119-1942

Ref.	*Part Number*	*Qty.*	*Description*
1	119-1944	1	Dipstick And O-Ring Kit
2	120-4402	1	Fuel Line, Filter And Clamp Kit
3	119-1945	1	Recoil And Mounting Hardware Kit
4	119-1946	1	Electric Blower Shroud And Hardware Kit
5	120-4419	1	Carburetor And Fuel Line Kit
5	120-4416	1	Carb Float, Valve Gasket Kit
6	119-1949	1	Primer Line And Clamp Kit
7	119-1950	1	Heater Box, Manifold And Hardware Kit
8	119-1952	1	Electric Starter And Hardware Kit
9	119-1954	1	Muffler, Gasket And Hardware Kit
10	119-1901	1	Spark Plug
11	119-1959	1	Ignition And Mounting Hardware Kit
12	119-1955	1	Complete Engine Gasket, Seal, O-Ring Kit ●
13	119-1956	1	Pinion Kit
14	119-1957	1	Govenor Arm/Link/Spring And Hardware Kit
15	119-1923	1	Drain Plug Kit
16	119-1958	1	Ring Gear, Flywheel And Hardware Kit
17	119-1921	1	Breather Tube Kit

● Not illustrated

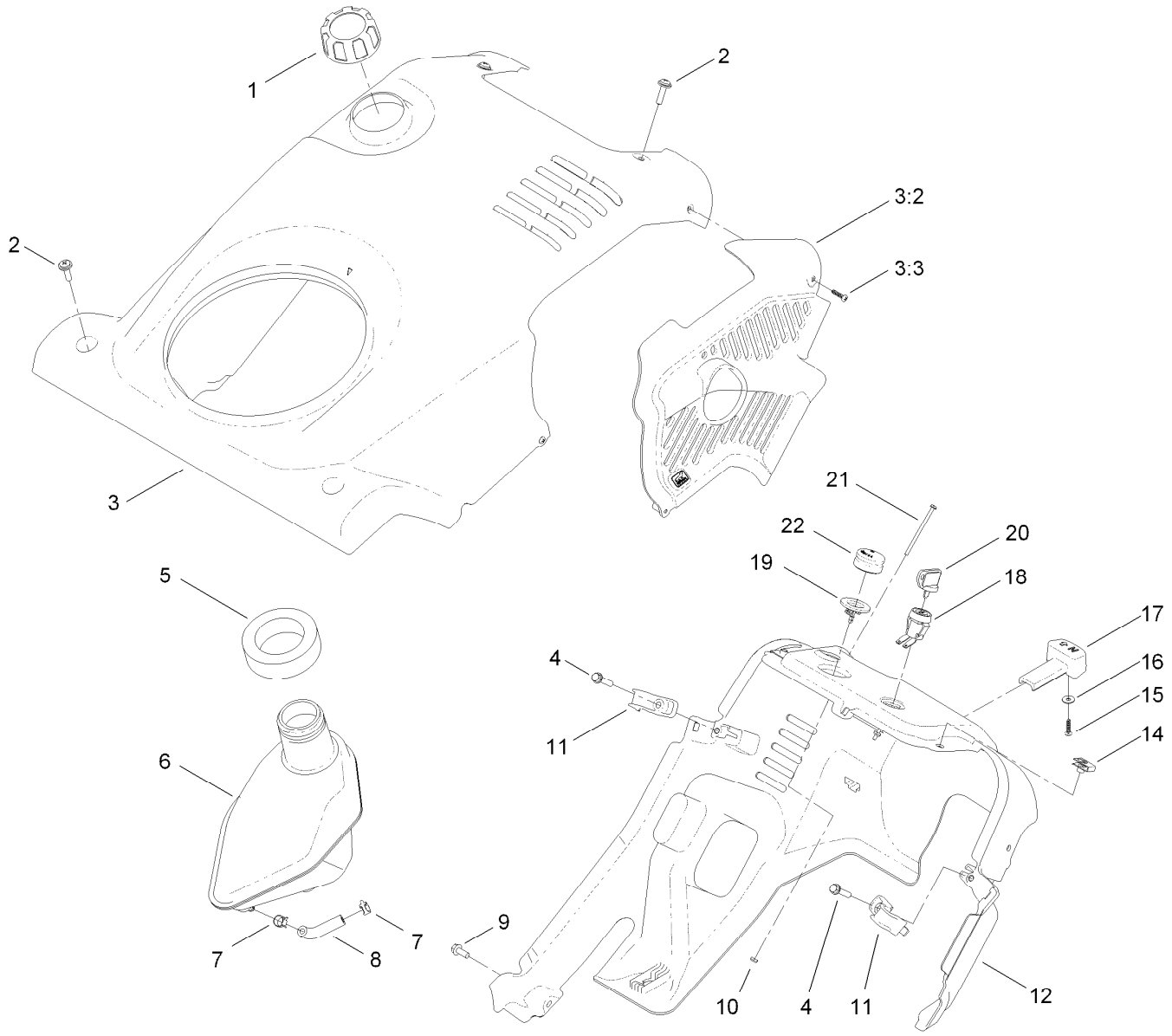

Shroud Assembly

Ref.	Part Number	Qty.	Description
1	114-3764	1	4-Cycle Gas Cap ASM
2	110-9361	4	Screw-PPH, Sems
3	120-9802	1	Shroud ASM
3:2	117-6035	1	Baffle-Exhaust, 4-Cycle
3:3	94-4496	2	Screw-PPH
4	46-8092	2	Screw-Plastite
5	114-3773	1	Seal-Tank
6	108-4880	1	Tank-Gas
7	2412-98	2	Clamp
8	114-3765	1	Hose-Fuel
9	32144-85	1	Screw-HWH
10	3296-9	2	Nut-Lock

Ref.	Part Number	Qty.	Description
11	108-4947	2	Clip-Shroud
12	117-6046	1	Shroud-Lower
14	107069	2	Clip
15	94-4496	1	Screw-PPH
16	3256-49	1	Washer-Flat
17	117-9100	1	Knob-Choke
18	40-5940	1	Switch
19	44-2750	1	Body-Primer
20	63-8360	1	Key-Ignition
21	117-9106	2	Screw-HWH
22	66-7460	1	Bulb-Primer

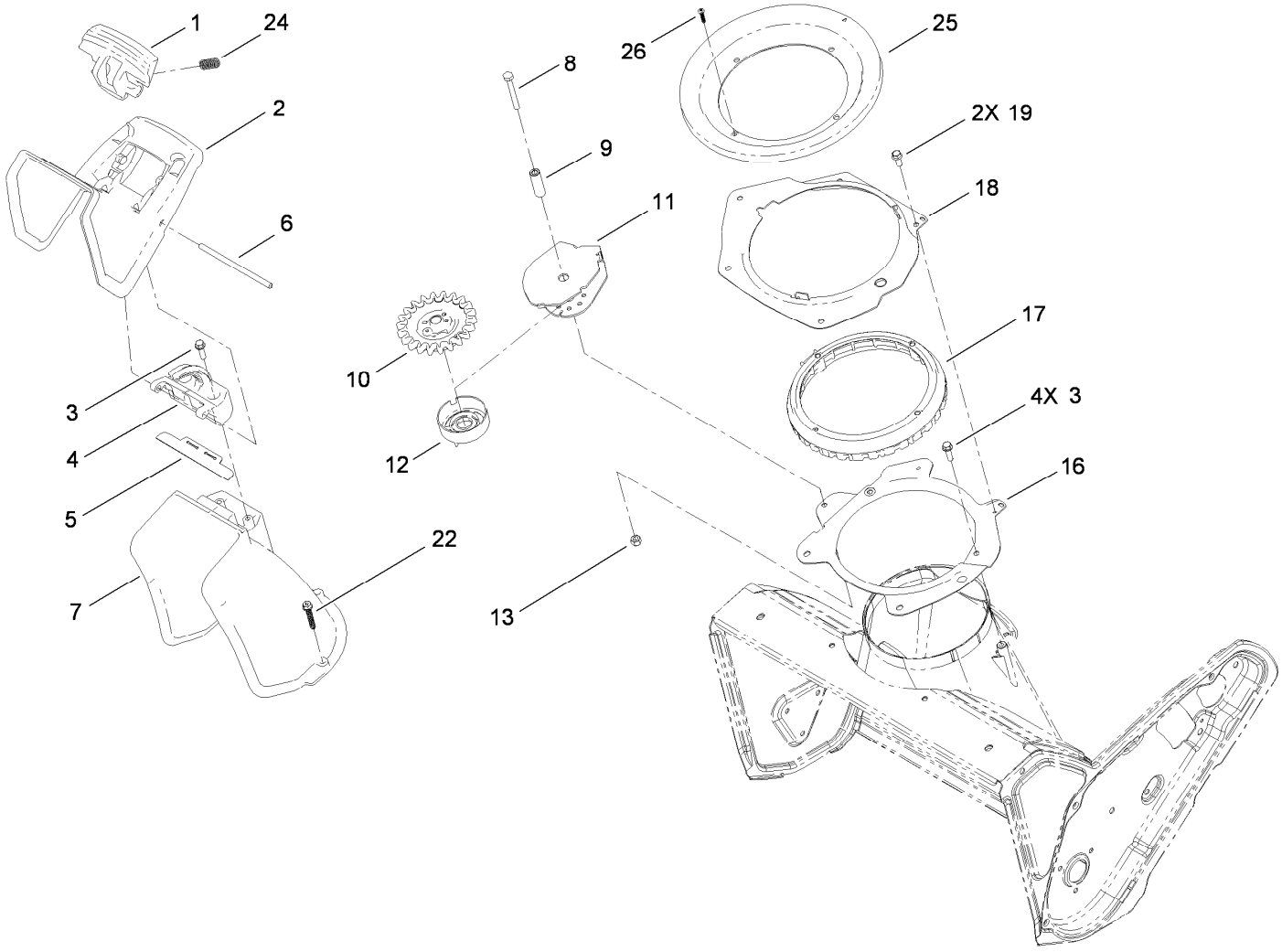

Chute Control Assembly

Ref.	Part Number	Qty.	Description
1	108-4941	1	Trigger-Deflector
2	117-9121	1	Deflector-Chute, Ce
3	46-8091	6	Screw-HWH
4	108-4942	1	Hinge-Ratchet, Deflector
5	114-3790	1	Seal-Deflector
6	110-9368	1	Pin-Hinge, Deflector
7	108-4939	1	Chute
8	321-18	1	Screw-HH
9	108-4877	1	Spacer-Sleeve, Pinion
10	108-4875	1	Pinion-Gear
11	108-4900-03	1	Bracket-Pinion

Ref.	Part Number	Qty.	Description
12	114-3792	1	Retainer-Cable
13	3296-42	1	Nut-Lock, NI
16	108-4883-03	1	Ring-Support, Chute
17	108-4882	1	Ring-Chute, Gear
18	108-4874-03	1	Retainer-Ring, Chute
19	32144-85	2	Screw-HWH
22	108-4946	3	Screw-Plastite
24	110-9360	2	Spring-Compression
25	114-3772	1	Seal-Ring, Chute
26	94-4496	1	Screw-PPH

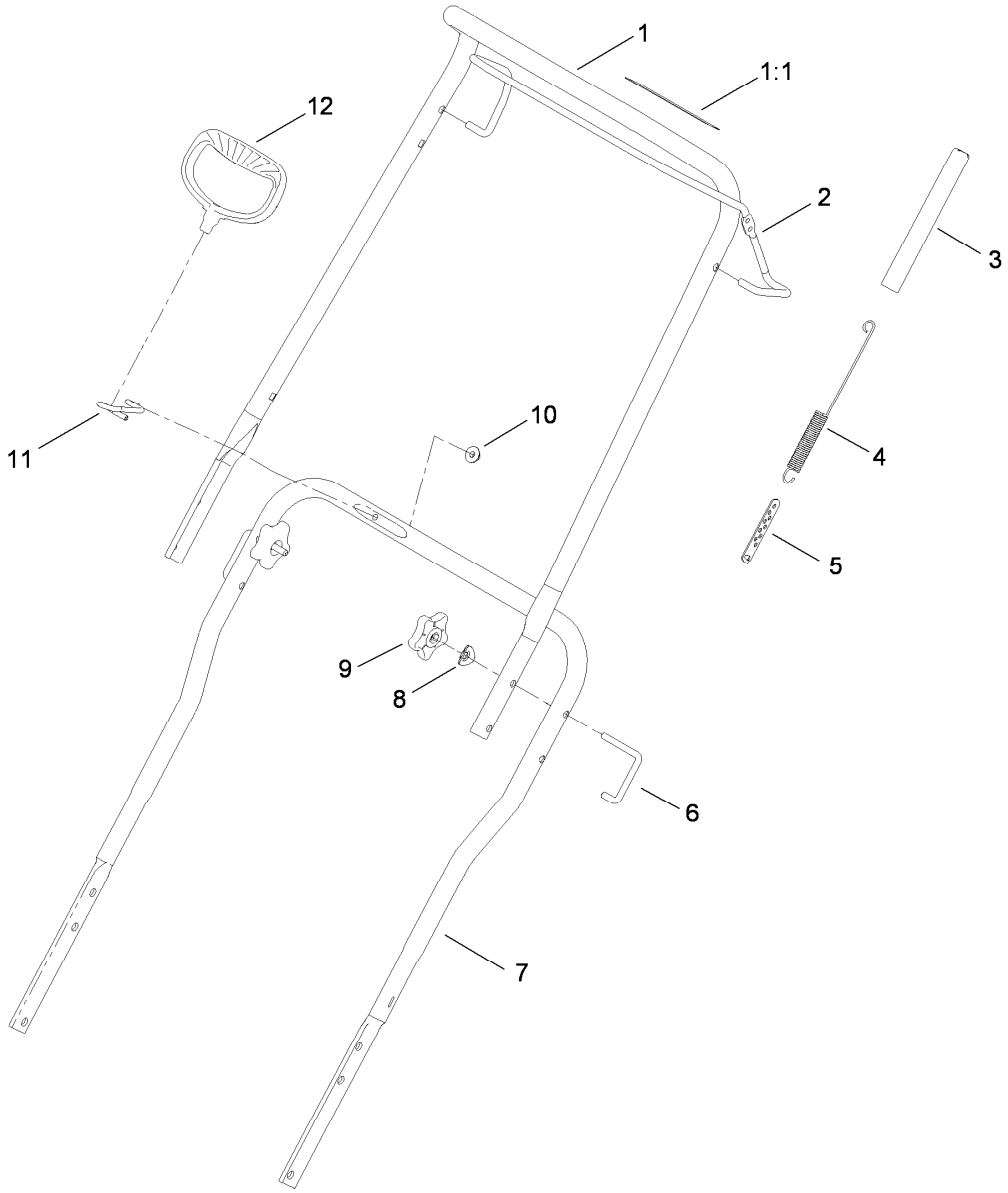

Upper Handle Assembly

Ref.	*Part Number*	*Qty.*	*Description*
1	114-3768	1	Upper Handle ASM
1:1	94-2577	1	Decal-Drive, Rotor
2	114-3780-03	1	Bail-Control
3	114-3796	1	Cover-Spring
4	108-4920	1	Spring-Extension
5	71-5330	1	Adjuster-Cable, Clutch
6	108-4887	2	Lock-Handle
7	108-4944-03	1	Handle-Lower
8	107-3844	2	Washer
9	114-3779	2	Knob-Handle
10	114-3778	1	Nut-Lock, NI
11	108-4949	1	Guide-Rope
12	117-9104	1	Handle-Recoil, Blue

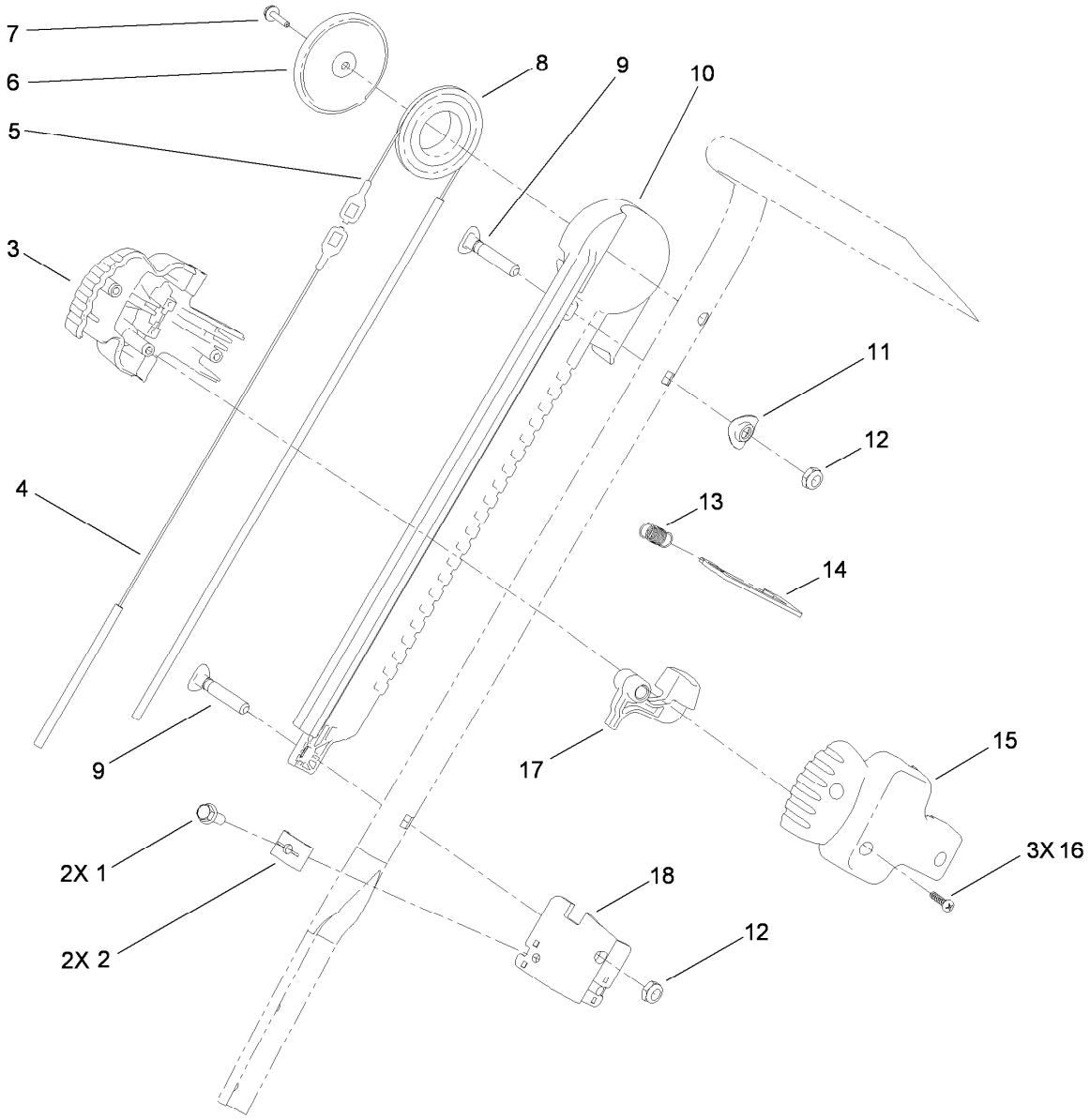

Handle Chute Control Assembly

Ref.	Part Number	Qty.	Description
1	32144-85	2	Screw-HWH
2	106-7297	2	Clamp-Cable
3	108-4912	1	Handle-Slider, RH
4	108-4897	1	Cable-Chute, Short
5	108-4898	1	Cable-Chute, Long
6	108-4931	1	Cover-Pulley
7	98-1375	1	Screw-HWH
8	108-4907	1	Pulley-Slider
9	107-3018	2	Screw-Handle

Ref.	Part Number	Qty.	Description
10	108-4899	1	Track-Slider
11	107-3844	1	Washer
12	3296-47	2	Nut-Lock, NI
13	108-4914	1	Spring-Trigger
14	108-4908	1	Plate-Lock, Chute
15	108-4911	1	Handle-Slider, LH
16	94-4496	3	Screw-PPH
17	108-4913	1	Trigger
18	108-4909	1	Bracket-Cable

Attachments and Accessories

For 38459 Power Clear 621 QZE Snowthrower

Product Name	Model/Part
5W30 Winter Oil, Case of 24 20-Ounce Bottles	38908
Toro Single Stage Cover	490-7464
Plain Single Stage Cover	490-7465

Notes:

Notes:



Count on it.