TORO®

OWNER'S OPERATING AND PARTS MANUAL



SERIES 5 TRACTOR 1963-64

MODEL NOS. 37011, 37012, 37013, 37013—40001 & UP

BOOK NO. H—549

Price 50 cents

COPYRIGHT 1961 BY
TORO MANUFACTURING CORPORATION
MINNEAPOLIS, MINNESOTA - U.S.A.

INDEX

Title	Page
Description	1
Specifications	1
Operation	3
Maintenance and Lubrication	4
Parts Catalog	13
Optional Equipment Catalog	34

LIST OF ILLUSTRATIONS

Figure		Page
1	Series V Tractor with Toro Seven Gang Park Master	A
2	Series V Tractor with 3 Unit Aero Frame	1
3	Toro Series V Tractor with Attached Universal Frame and Seven Spartan Mowers	2
4	Toro Series V Tractor with Toro Dump Box Attached	3
5	Operating Controls and Indicating Instruments	3
6	Operator's Seat	4
7	Toro Series V Tractor with Attached Universal Frame and Nine Spartan Mowers	4
8	Right-Front View of Series V Tractor	5
9	Left Side View of Engine	5
10	Carburetor Fuel Filter	6
11	Clutch Pedal Free Travel Measurement	6
12	Clutch Linkage	7
13	Minimum Turning Radius Adjustment	7
14	Trouble Shooting Chart	9
15	Service Interval Chart	10
16	Lubrication Chart	11
17	Clutch Assembly	14
18	Instrument Panel	15
19A	Hood, Radiator, Fuel Tank and Muffler	16
19B	Frame, Toe Board, Floor Plate and Battery	18
20	Front Wheels and Axle	20
21	Transmission Assembly	22
22	Brake, Clutch and Throttle Linkage	24
23	Steering Gear Assembly	26
24	Seat Assembly	28
25	Drive Shaft Assembly (Clark)	29
26	Rear Axle Assembly	30
27	Rear Wheels and Axle Shafts	32
28	Hydraulic Brakes	33
29	Power Steering Kit (Includes Fig. 30)	36
30	Power Steering Booster Assembly	38
31	Hydraulic Power Kit	40
32	Rear Power Take-Off Kit	42
33	Dump Box Kit	44
34	Governor Kit	46
35	Head and Tail Light Kit	50
36	Directional Signal Kit	48
37	Horn Kit	49
38	Floor Plate Extension Kit	47

Congratulations ! !

You now own the finest turf tractor made, and we wish to welcome you to the ever-growing family of satisfied Toro Owners. Given proper care, this tractor will repay you with years of excellent service.

Your Toro Series V Tractor has been manufactured by an organization with over fifty years experience as mowing machine specialists. Every machine is carefully inspected and tested before leaving the factory.

To make operating, servicing and maintaining your Toro Tractor as easy and convenient as possible, please read this Owner's Manual. It contains all the information you need, and is presented in a clear, concise manner. You may also find the last section on Optional Equipment helpful in fully utilizing your tractor. Do not hesitate to consult your authorized Toro Distributor if additional information is needed in operating your Toro Tractor properly.

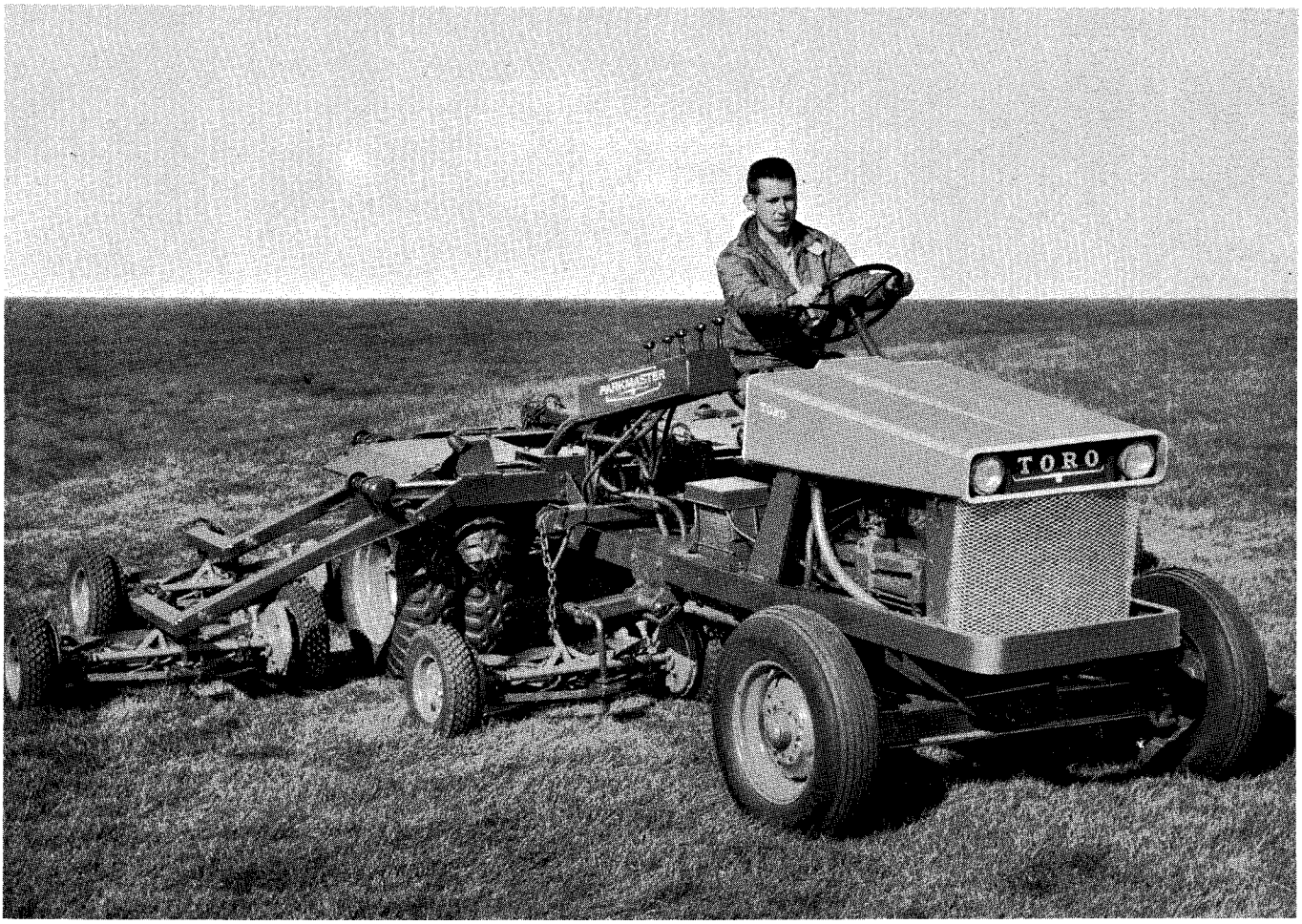

Figure 1. Series V Tractor with Toro Seven Gang Park Master

Warranty

The Manufacturer warrants each new piece of equipment sold to be free of defects in material and workmanship. For one year from the purchase date of consumer line equipment or 45 days if sold for commercial use, Toro Manufacturing Corporation will repair or replace for the original purchaser, free of charge, through any Authorized Service Dealer, any part or parts found at our factory in Minneapolis, Minnesota, to be defective under normal use and service. All institutional equipment is warranted for ninety (90) days from the purchase date.

This Warranty does not obligate the Manufacturer to bear the cost of transportation charges in connection with the replacement or repair of defective parts -- nor shall it apply to a machine upon which repairs or alterations have been made, unless authorized by the manufacturer.

This Warranty does not include nor cover standard accessories produced by other manufacturers. Such accessories have separate warranties by their respective manufacturers . . . and repair or exchange will be made on the basis of such warranties, and the policies authorized by them shall be adhered to.

This Warranty is in lieu of all other warranties expressed or implied.

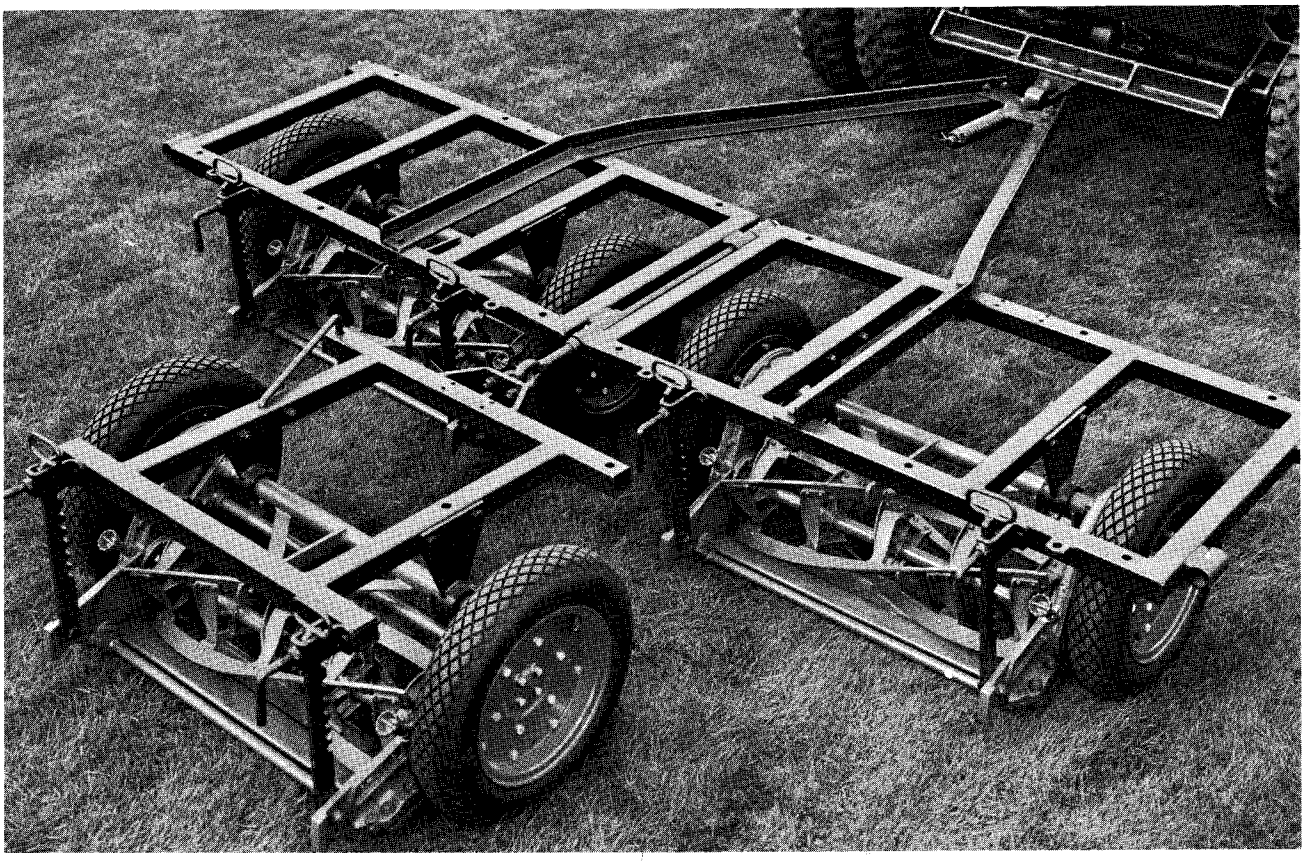

Figure 2. Series V Tractor with 3 Unit Aero Frame

1. DESCRIPTION

The Toro Series V General Tractor is a highly engineered piece of equipment, designed to the requirements of turf maintenance.

The Series V is the power source for operating the heavy-duty Toro grass-cutting equipment. The Series V Tractor will handle five or seven gang Spartan Mowers, with either the hydraulic Parkmaster or the Universal Mounted Frame.

The universal frame, or any other towed frame, may be pulled by the adjustable draw bar, and the time tested Toro Utility Dump Box will fit the Series V as well as the earlier Toro Tractors. The Toro Series V is the latest development in a long history of Toro Tractors, incorporating such modern designs as Power Steering, Power Take-off, Improved Seat Suspension, and a host of similar refinements. With all the new features, the time tested design of the Toro Tractors has been retained, making the Toro Series V the leading tractor for all heavy-duty turf maintenance.

2. SPECIFICATIONS

ENGINE: Continental, six cylinder, L-type head, with a 3-5/6 inch bore and 4-3/8 inch stroke. Displacement is 226 cubic inches and the compression ratio is 6.7 to 1.0. The engine develops 73 horsepower at 2400 RPM and a maximum torque of 178 ft/lb. A gear-type oil pump delivers full pressure to all bearings.

SELF STARTER: 12-volt starter and 54 plate battery.

OIL FILTER: Replaceable element type with 1/2 quart capacity.

AIR CLEANER: Oil bath type with 1 quart capacity.

COOLING SYSTEM: Tractor type tubular radiator, 16 quarts capacity, water pump circulation with thermostat.

GASOLINE TANK: 13-1/2 gallon capacity.

CLUTCH: 11 inch, spring loaded, foot operated.

TRANSMISSION: Sliding spur gears, four speeds forward, one reverse. Gear ratios are as follows: first gear, 6.398; second gear, 3.092; third gear, 1.686; fourth gear, 1.000 to 1; and reverse gear 7.820.

DRIVE SHAFT: 2-1/2 inch diameter steel tubing with two universal joints.

REAR AXLE: Heavy duty housing, 7.17 to 1.000 with full floating axles.

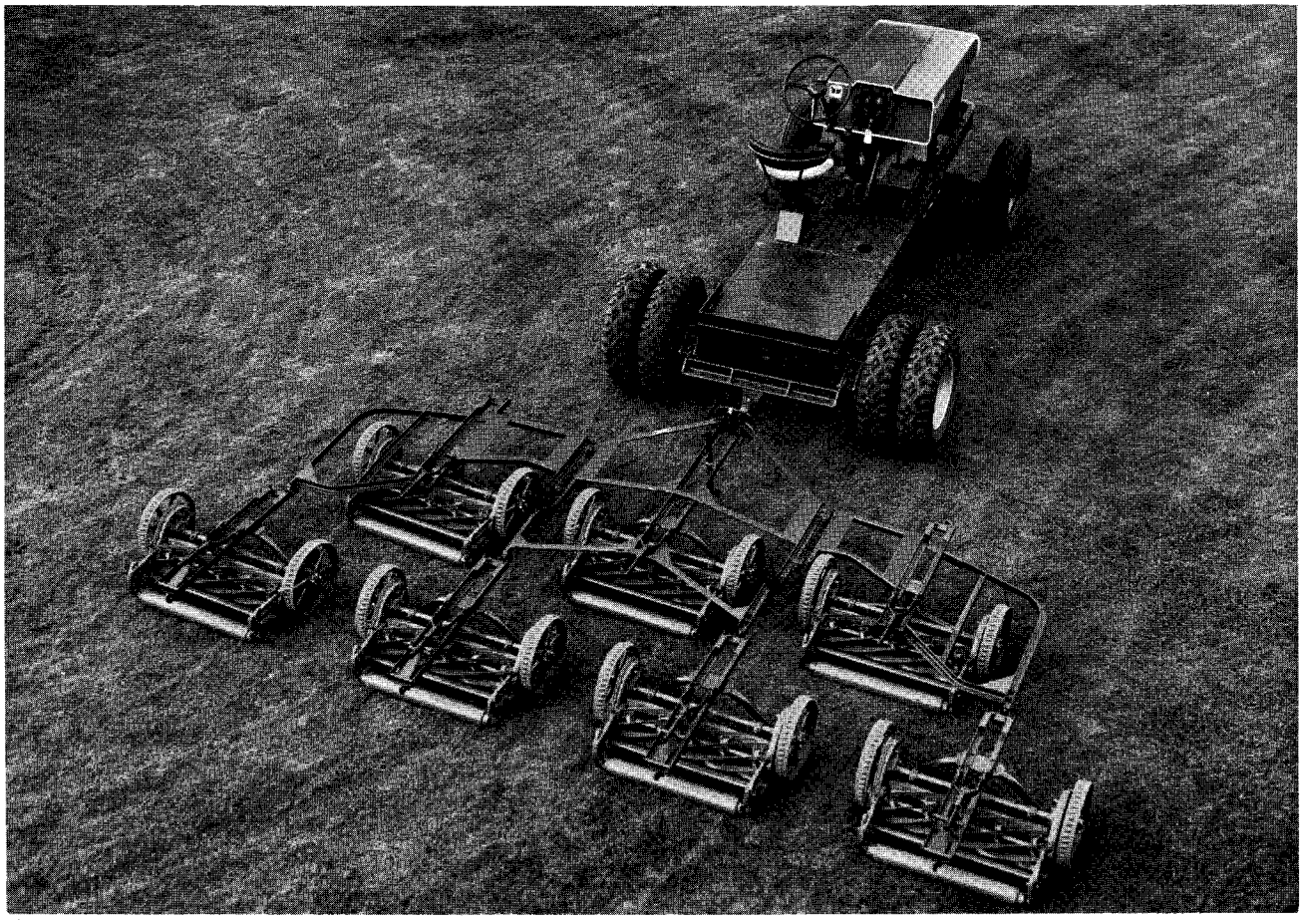

Figure 3. Toro Series V Tractor with Universal Frame and Seven Spartan Mowers

FRONT AXLE: Welded construction. 4 inch, 9-1/2 pound structural steel I beam, reinforced top and bottom. Center pivot and wishbone integral with axle. Needle bearings and roller thrust bearings on steering spindles.

FRONT WHEELS: Cast iron hubs, pressed steel wheels with drop center 15 x 5 rims.

REAR WHEELS: Cast iron with integral brake drums. Semi-drop center, demountable dual rims, 5.50 x 16.

BRAKES: Hydraulic brakes on rear wheels, parking brakes provided by mechanical actuation of same brake shoes.

FRAME: Welded construction. 5 inch, 9 pound structural steel channel with integral front bumper.

SEAT: Foam rubber cushioned seat and wrap-around back rest adjustable for - and - aft.

DRAWBAR: 13/16 inch diameter hitch hole. May be installed on tractor centerline, or any of six positions to a maximum of 16-7/8 inches either side of center. Height 15 inches from ground to top of drawbar. Drawbar is quick removable type. Standard equipment on all tractors except with hydraulic Parkmaster.

DIMENSIONS:

Overall Length:	133 inches w/o dump box, 150 inches with dump box.
Height:	47-1/4 inches over front of hood.
	64 inches over steering wheel.
	54-1/2 inches over dump box (66-1/2 inches with 1/2 yard extension).
Maximum Width:	82 inches (across rear tires).
Wheel Base:	98 inches.
Front Wheel Tread:	57-1/2 inches.
Rear Wheel Tread:	63 inches.
Curb Clearance:	10 inches.

WEIGHT:

2810 pounds total curb weight, includes coolant, fuel and lubricants.

1455 pounds on front wheels (52% of total).

1355 pounds on rear wheels (48% of total).

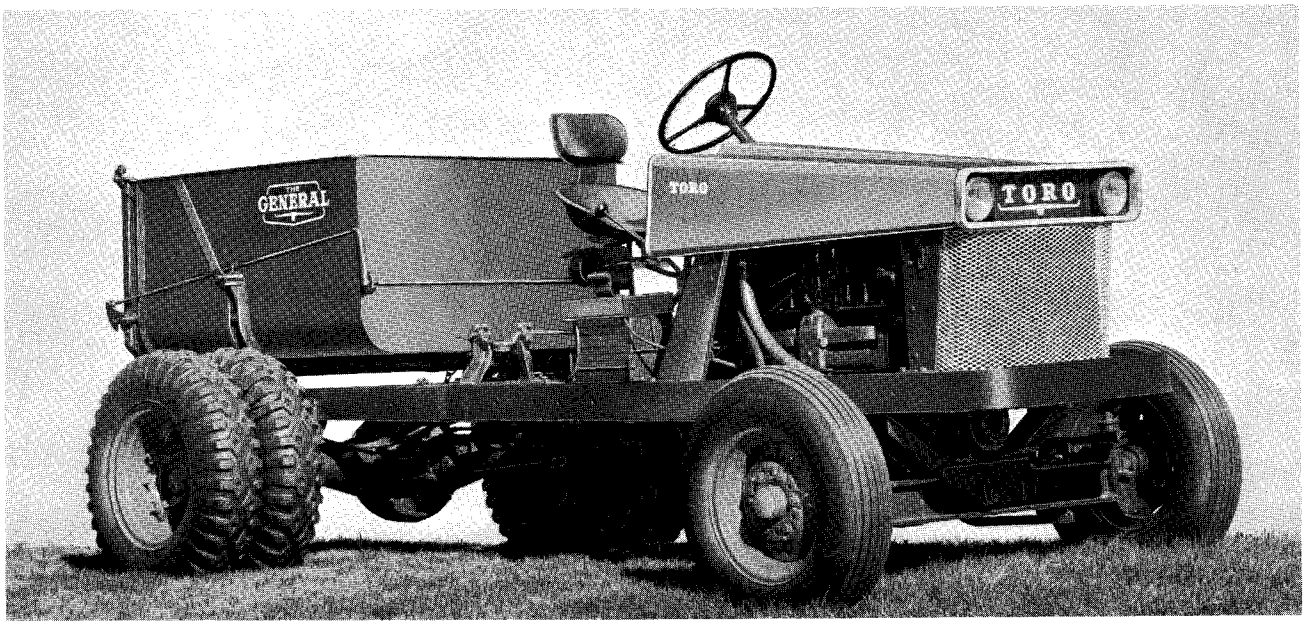

Figure 4. Toro Series V Tractor with Toro Dump Box Attached

3. OPERATION

The operation of your new Toro Series V Tractor is as easy as driving your automobile. The operating controls are in approximately the same location and their manipulation is similar. (See figure 5.) Before using the tractor for the first time, read your Engine Manual CAREFULLY. Give particular attention to Section III, pages 17-22, which contain the necessary operating precautions.

Before starting the tractor, make certain that the transmission is in the neutral position. To start the engine, turn the ignition key all the way clockwise, releasing it as soon as the engine starts. The carburetor choke valve is controlled by the knob on the instrument panel. Pulling the knob out the first 1/4 inch produces a fast idle speed for starting; pulling the knob out further operates the choke valve in the carburetor.

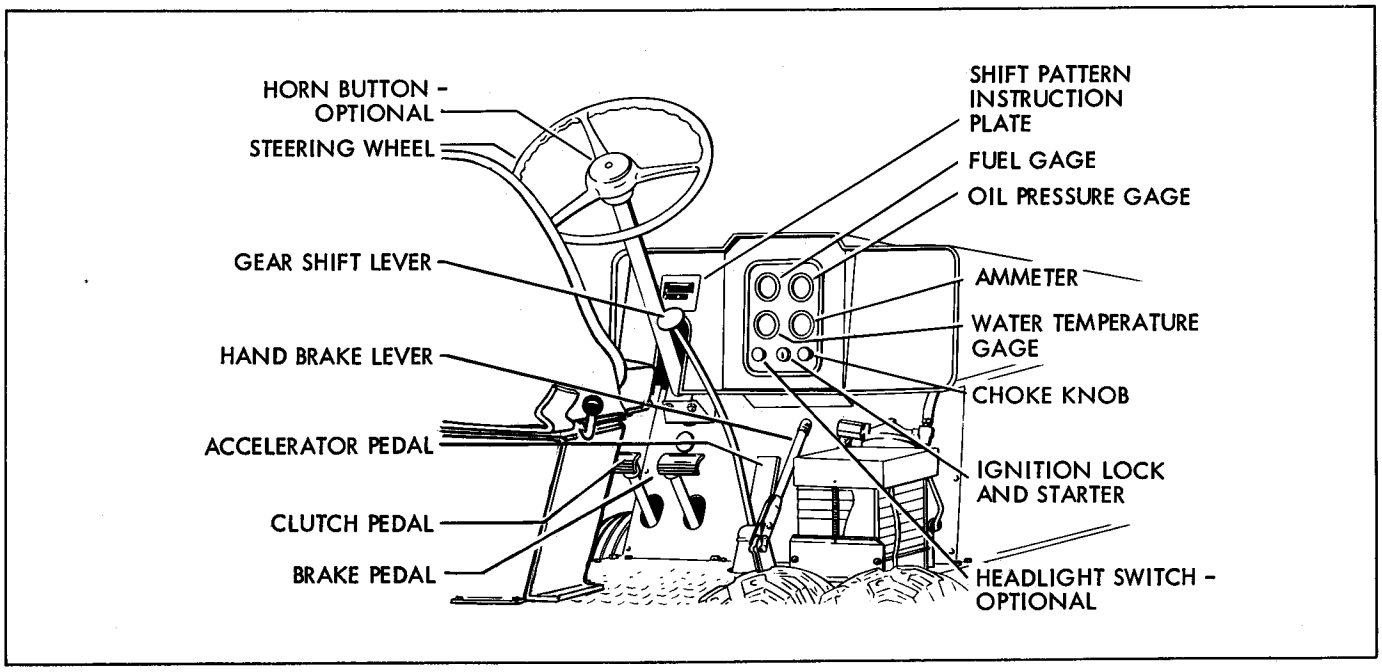

Figure 5. Operating Controls and Indicating Instruments

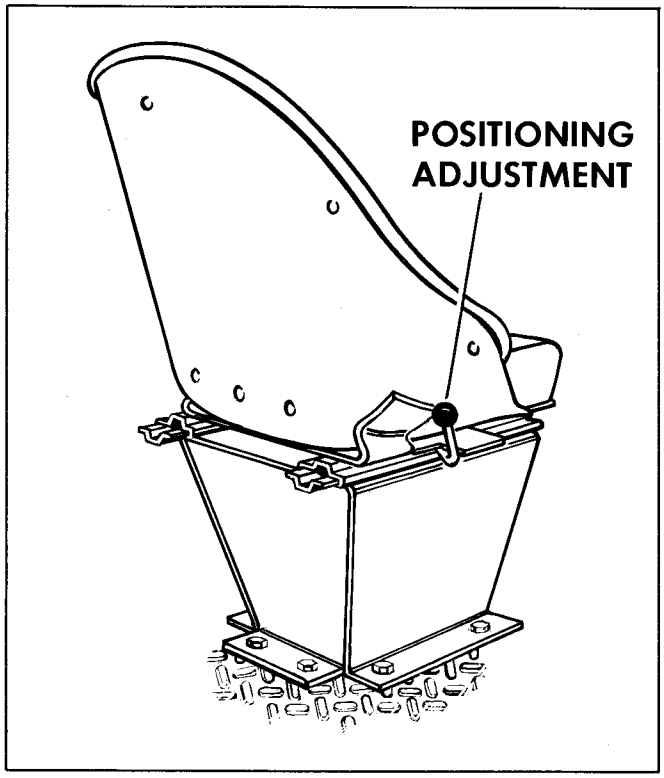

Figure 6. Operator's Seat

The forward and backward positioning may be adjusted by pulling out the lever at the right of the seat, sliding the seat to the position desired and releasing the lever.

right side of the seat, sliding the seat to the position desired and releasing the lever.

The following gear recommendations show which gear should be selected to correctly perform various tractor applications.

FIRST GEAR: Use for jobs requiring slow speed, or for heavy cutting with Rotary Mower.

SECOND GEAR: The principal gear for all gang-mower work. Most operations will be in this gear.

THIRD GEAR: A faster speed for light mowing conditions.

FOURTH GEAR: Transport. The Series V Tractor has a faster transport speed than previous Toro Tractors and will usually keep up with city traffic if streets are reasonably smooth.

4. MAINTENANCE

AIR CLEANER

Your Toro Series V Tractor is equipped with an oil bath air cleaner. The importance of servicing this cleaner cannot be over-emphasized. Very few preventive maintenance measures give you so much in retarded engine wear in return for so little time and effort. (See figure 8.)

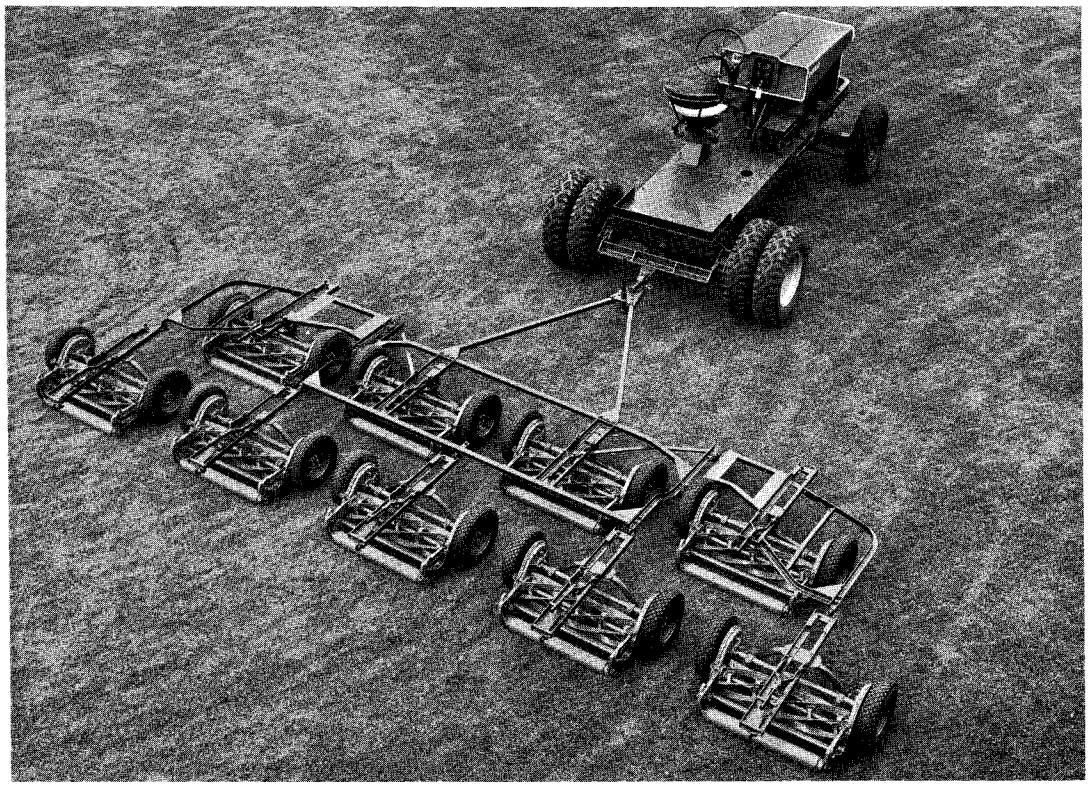

Figure 7. Toro Series V Tractor with Attached Universal Frame and Nine Spartan Mowers

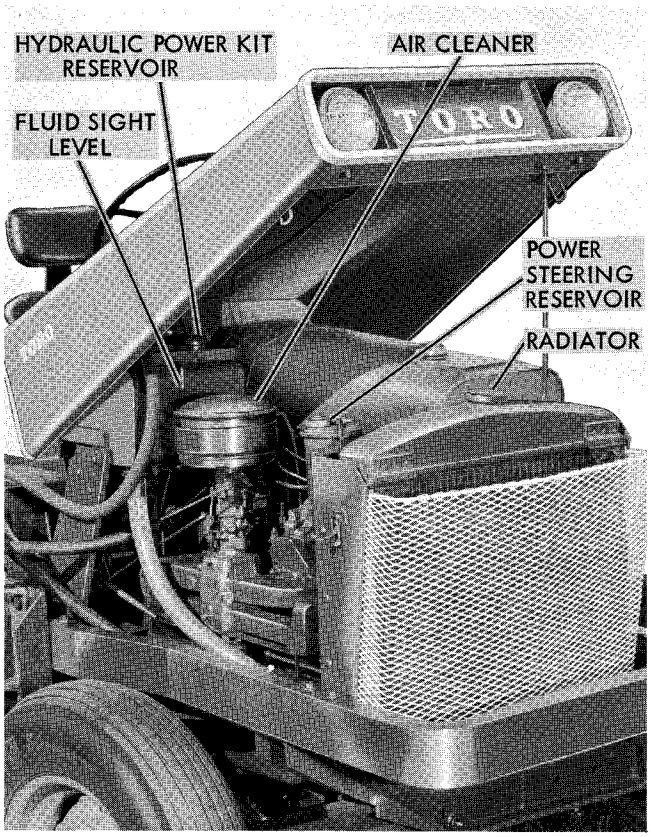

Figure 8. Right-Front View of Series V Tractor

The owner or operator is the best judge in determining the necessary interval for servicing the air cleaner, due to the wide variety of possible operating conditions. In general, the air cleaner should be serviced whenever a 1/4 inch of sludge accumulates in the bottom of the air cleaner pan. In extremely dusty operations, the air cleaner may have to be serviced as often as once or twice a day.

To service the air cleaner, remove the thumb screw at the top of the cleaner and lift off the strainer section. Loosen the screw at the base and lift the cleaner straight up from the carburetor. Pour the oil out and wipe the body dry with a clean rag. Fill the body to the level mark with the same weight oil as used in the engine. Wipe the bottom of the strainer and install it on the body with the thumb screw. Position the air cleaner on the carburetor and secure it with the screw on the base. Make certain that the air cleaner is on tight.

GREASE FITTINGS

Before servicing any of the grease fittings on the tractor, clean the fitting with a rag to make sure that no foreign matter will be forced into the bearing with the lubricant. (See figure 15.) When servicing a fitting, make certain that the bearing is taking grease. Keep applying lubricant to the fitting until you can see some of the grease coming out from the sides of the bearing. Wipe the fittings clean after servicing.

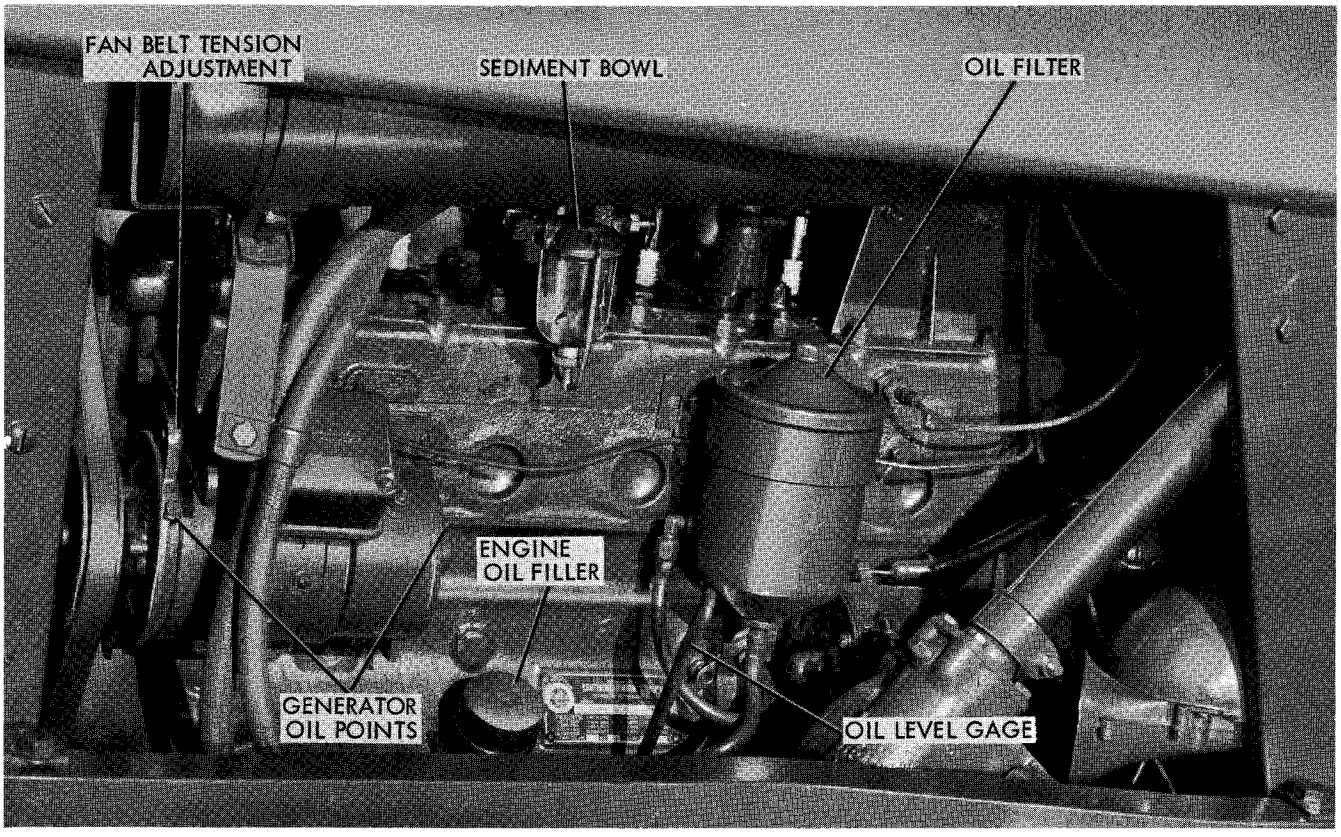

Figure 9. Left Side View of Engine

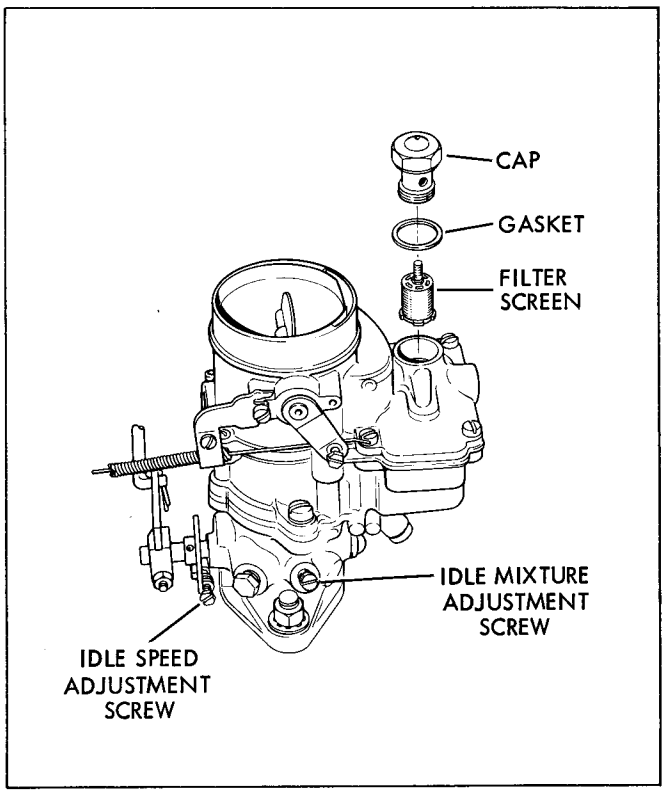

Figure 10. Carburetor Fuel Filter

FUEL FILTERS

Your Series V Tractor is equipped with two filters in the fuel line. One is a metal screen in the sediment bowl below the fuel tank (see figure 9). The other is a disc-type filter in the carburetor (see figure 10). It should be noted here that whenever trouble occurs, and indications point to a lack of fuel, one of the first things to suspect is a clogged filter, and it will generally be the one in the carburetor.

The screen in the sediment bowl will rarely need cleaning; however, the fuel may be shut off, and by removing the glass bowl, the screen may be cleaned if necessary.

To clean the filter in the carburetor, remove the retaining cap and gasket. Unscrew the filter and blow clean with compressed air.

BATTERY

Keep the liquid level in the battery about 3/8 inches over the top of the plates. The specific gravity of the battery should be 1.250. Check each cell. If the tractor is to be used during extremely cold weather, it is important that the battery has a full, or near full charge. A fully charged battery can withstand a much lower temperature. Use only distilled water in the battery. During cold weather, run the engine for 15 to 20 minutes after adding water to prevent freezing.

FAN BELT TENSION

Check the fan belt tension at every oil change. Correct tension should allow between 3/4 inch and 1 inch slack on the long span. To adjust the tension, loosen the adjusting screw (see figure 9) and either move the generator away from the engine to increase the tension, or closer to the engine to relax the tension. When correct tension is obtained, tighten the adjusting screw.

UNIVERSAL JOINTS

When servicing the universal joints, (see figure 15), remove the slotted plug from each universal joint and install a grease fitting. Grease the universal joints with a good grade of semi-fluid lubricant. Remove the grease fittings and securely re-install the slotted plugs. The grease fittings are not oil-tight and this procedure will prevent leakage.

CAUTION

Use only a hand-operated grease gun on the universal joint fittings. Lubricate only until added resistance is felt on the grease gun. If too much pressure is applied to the fittings, the grease seals may be ruptured.

BRAKE ADJUSTMENT

The hydraulic brakes should be adjusted whenever the brake pedal has more than 2 inches of free travel. Block the front wheels and jack up the rear wheels. Make certain that the transmission is in the neutral position. Remove the protective plugs from the adjusting slots in the brake plates (see figure 28), and tighten the starwheel with a screwdriver until the wheels are locked. Back off the starwheel 12 to 15 notches, or until the wheel turns freely. Adjust the brake on the opposite wheel in the same manner and replace the protective plugs.

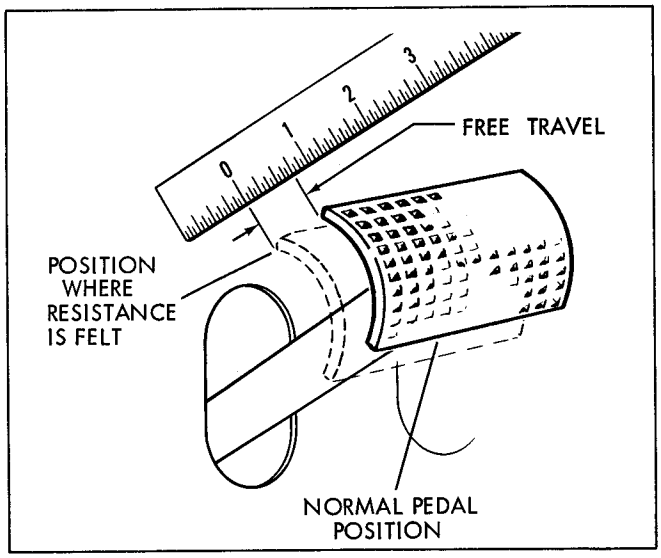

Figure 11. Clutch Pedal Free Travel Measurement

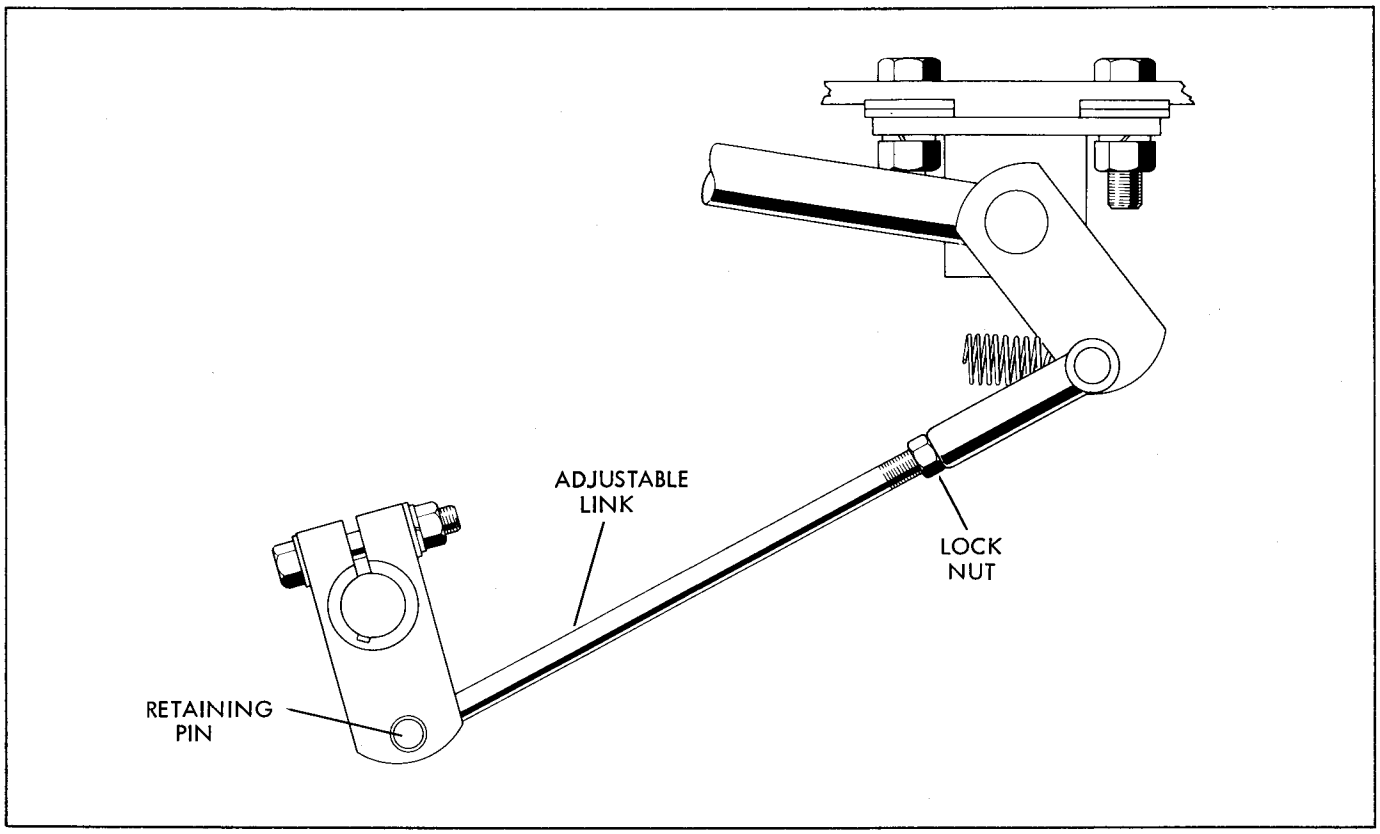

Figure 12. Clutch Linkage

HAND BRAKE ADJUSTMENT

The hand brake adjustment of your Toro Series V Tractor is very simple to make. When it is apparent that the brakes are in need of adjustment, place the hand brake lever in the released position and turn the knurled nut at the top of the lever in a clockwise direction about four turns. Park the tractor on a fairly steep slope with the rear of the tractor facing down hill and the transmission in neutral. Apply the hand brakes. If they will not hold, release the hand brake lever and tighten the knurled nut further. Repeat until the tractor will hold on the slope.

CLUTCH PEDAL FREE - TRAVEL ADJUSTMENT

The clutch pedal free travel should be measured at least once a month. To measure the free travel correctly, the measurement must be made at the clutch pedal foot pad. By pressing down on the clutch pedal with your hand, you will find that it will travel a certain distance before an added resistance is felt. The distance from the normal released clutch pedal position to the point where added resistance is felt is the free travel (see figure 11). Place a ruler along the side of the clutch pedal and measure the amount of free travel. If the free travel is less than 3/8 of an inch, the clutch should be adjusted.

To adjust the clutch (see figure 12), remove the cotter pin and retaining pin from the adjustable link at the clutch throw-out lever. Loosen the jam nut at the other end of the adjustable link and turn the link counterclockwise about three turns. Lock the jam nut and secure the adjustable link with the retaining pin and cotter pin.

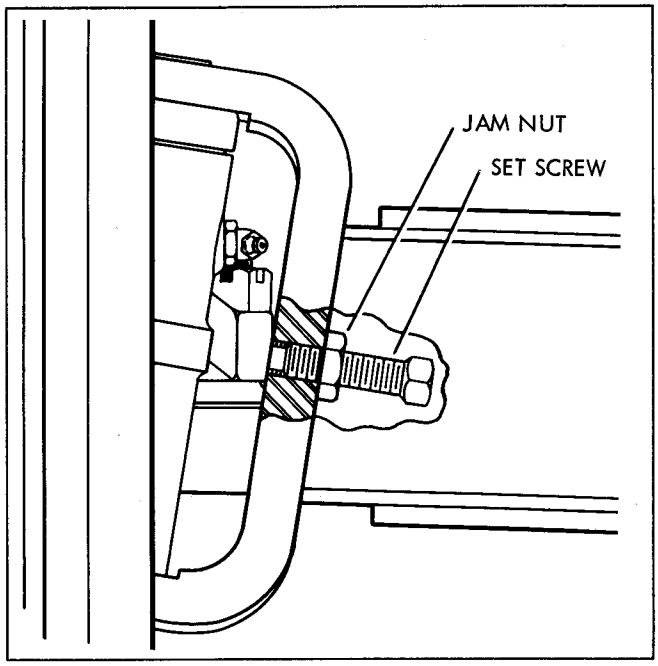

Figure 13. Minimum Turning Radius Adjustment

It is best not to disconnect the adjustable link from the clutch pedal end, as the pedal return spring will be extremely difficult to replace. Hold the throwout lever from moving all the way forward when it is disconnected - if it moves too far, the throwout fingers may lose contact with the throwout bearing, and it will be necessary to open the clutch inspection cover to set them in place again.

After the first adjustment has been made, measure the pedal free travel. Repeat this operation until about 3/4 inches of free travel exists at the pedal.

MINIMUM TURNING RADIUS ADJUSTMENT

The minimum turning radius of the Series V Tractor is 7 feet 3 inches from the center of the turn to the closest side of the rear dual tire. If you wish to increase the minimum turning radius, you may do so by adjusting the setscrews in the ends of the front axle (see figure 13). To increase the turning radius, position the front wheels to the right at the desired minimum turning radius angle and loosen the right side locknut. Turn the setscrew in until it stops and retighten the locknut. Turn the front wheels to the desired minimum turning radius for a left turn and adjust the left side setscrew in the same manner.

RECOMMENDED PROCEDURE FOR TRACTOR STORAGE

If you wish to store the Series V Tractor for a long period of time, the following steps should be accomplished prior to storage.

1. WITH THE ENGINE COLD, drain the engine oil and replace the drain plug.
2. Refill the oil pan to 1/2 its normal capacity with clean, high grade, SAE 50 engine oil.
3. Start the engine and run at about 700 RPM for at least one minute, but NO MORE THAN 2 minutes, to complete oil distribution to all surfaces.
4. Stop the engine and remove all of the spark plugs.
5. Pour 3 ounces of SAE 50 engine oil into each of the spark plug holes.
6. Pull the high-tension wire out of the top of the coil, and crank the engine with the starter for at least a dozen revolutions to distribute the oil over the cylinder walls and valve mechanism.
7. Replace all spark plugs, the high-tension coil wire, and all spark plug wires.
8. Drain the oil from the engine pan and replace the drain plug. Fill with regular weight oil.
9. Drain the coolant by opening the petcock at the bottom of the radiator AND the one at the left side of the engine block. After all of the coolant has drained, close both of the petcocks.
10. Drain all of the gasoline from the fuel tank, lines, and carburetor bowl. Remove the sediment bowl, discard the gasoline, and replace the bowl.
11. Seal the air cleaner inlet, the exhaust outlet, and the crankcase breather tube with weather-proof masking tape. Prior to applying the masking tape, wipe all oily or greasy surfaces to which the tape must adhere with a rag saturated with gasoline. After most of the oil or grease is removed, wipe the surface dry with a clean, dry rag.
12. Make certain that the oil filter cap, gas tank cap, and the radiator cap are securely in place.
13. Disconnect and remove the battery from the tractor. If possible, the battery should be stored in a COOL, DRY place. About once a month, check the liquid level and specific gravity of each cell. When the battery has a full charge, the specific gravity should be 1.250.
14. Place the transmission lever in the neutral position and apply the hand brake.
15. Jack up the front of the tractor until the wheels are just off the ground and place blocks under the front axle.
16. Jack up the rear of the tractor in the same manner as above and place blocks under the rear axle.
17. If possible, cover the entire tractor with a heavy piece of plastic or a canvas drop-cloth.

ENGINE TUNE-UP

Detailed instructions on tuning the engine will be found in the applicable engine manual under Section VI FUEL SYSTEM, and Section VII IGNITION. In most cases, an engine tune-up will consist of the following steps:

1. Replacing, or cleaning and re-gapping the spark plugs, depending on their condition and length of service.
2. Replacing the breaker points in the distributor.
3. Gapping the distributor breaker points.
4. Replacing the condenser in the distributor.
5. Setting the ignition timing.
6. Setting the idle mixture and idle speed adjustment screws on the carburetor (see figure 10).

TROUBLE SHOOTING CHART

TROUBLE	PROBABLE CAUSE	REMEDY
Hard steering.	Front tire air pressure low. Steering gear low on lubricant. Steering linkage dry. Spindle frozen. Oil level in pump low (with power steering).	Check pressure. Fill steering gear. Re-grease linkage. Replace. Bring up to level.
Transmission hard to shift.	Heavy lubricant in cold weather. Transmission lubricant low.	Use #90 lubricant in winter. Re-fill to proper level.
Gears grind when shifting.	Too much free travel in clutch pedal. Operator shifting gears with tractor in motion. Transmission shift fingers bent.	Re-adjust linkage. "Double clutch" when shifting on the move, or else stop the tractor to shift gears. Inspect and replace.
Brakes will not hold.	Leak in hydraulic system. Brake fluid low in master cylinder. Brake shoes worn. Shoes wet. Shoes soaked with oil.	Inspect and seal. Refill with clean brake fluid. Adjust brakes or replace brake shoes. Allow to dry. Replace shoes.
Hand brakes will not hold.	Hand brake linkage set too loose. Brake shoes worn down too far.	Re-adjust lever. Replace shoes.
Brakes "fade" after prolonged operation.	Brake shoes adjusted too tight.	Back off star wheels five to ten notches.

NOTE: FOR TROUBLES PERTAINING TO THE ENGINE, REFER TO YOUR ENGINE MANUAL.

Figure 14. Trouble Shooting Chart

SERVICE INTERVAL CHART

Fig. & Ref. No.	Service Point	Service Interval				Type of Lubricant or Service
		Daily	50 Hours	150 Hours	500 Hours	
16-1	Steering Linkage		*			Chassis Lubricant
-2	Front Axle Pivot Point		*			Chassis Lubricant
-3	Wishbone Pivot Point		*			Chassis Lubricant
-4	Steering Gear (Check Level)			*		140 Gear Lube
-5	Power Steering Cylinder		*			Chassis Lube
-6	Front Wheel Bearings				*	Fibre Wheel Grease
-7	Transmission			*		140 Gear Lube
-8	Brake Master Cylinder			*		Brake Fluid
-9	Hand Brake Linkage		*			10 W Oil (Use Oil Can)
-10	Clutch Linkage				*	Chassis Lube
-11	Universal Joints				*	Chassis Lube
-12	Differential			*		140 Gear Lube
-13	Engine Drain Plug		*			Drain and Refill
Fig. 9	Sediment Bowl (As Needed)					Empty and Clean
	Oil Filter			*		Replace Cartridge
	Oil Level Gage	*				Check Level
	Engine Oil Filler (As Needed)					Maintain Level
	Generator Oil Points		*			3 or 4 Drops 10 W Oil
	Fan Belt Tension Adjustment			*		Check Tension
Fig. 8	Hydraulic Power Kit Reservoir				*	Type A trans. oil or SAE 20 oil,
	Fluid Sight Level	*				Check Level non-detergent
	Air Cleaner (As Needed)					Same oil as engine
	Power Steering Reservoir - Check Level		*			SAE 10 W, orType A Trans.
	Drain and Re-fill				*	Daily Check
	Radiator	*				
	Distributor Cam			*		Small amount of chassis lube.
	Brake Linkage, Distributor Oil Point, and Carburetor Linkage		*			3 or 4 Drops 10 W Oil
	Battery		*			Check Level
	Engine Oil Drain (At Bottom of Engine)		*			Drain When Warm

NOTE: Use oil rated for MS Service

---- Expected Temperatures ----	
32° F to -10° F	Use 20 or 20 W Oil
32° F to 75° F	Use 20 W Oil
75° F and Above	Use 30 W Oil

Figure 15. Service Interval Chart

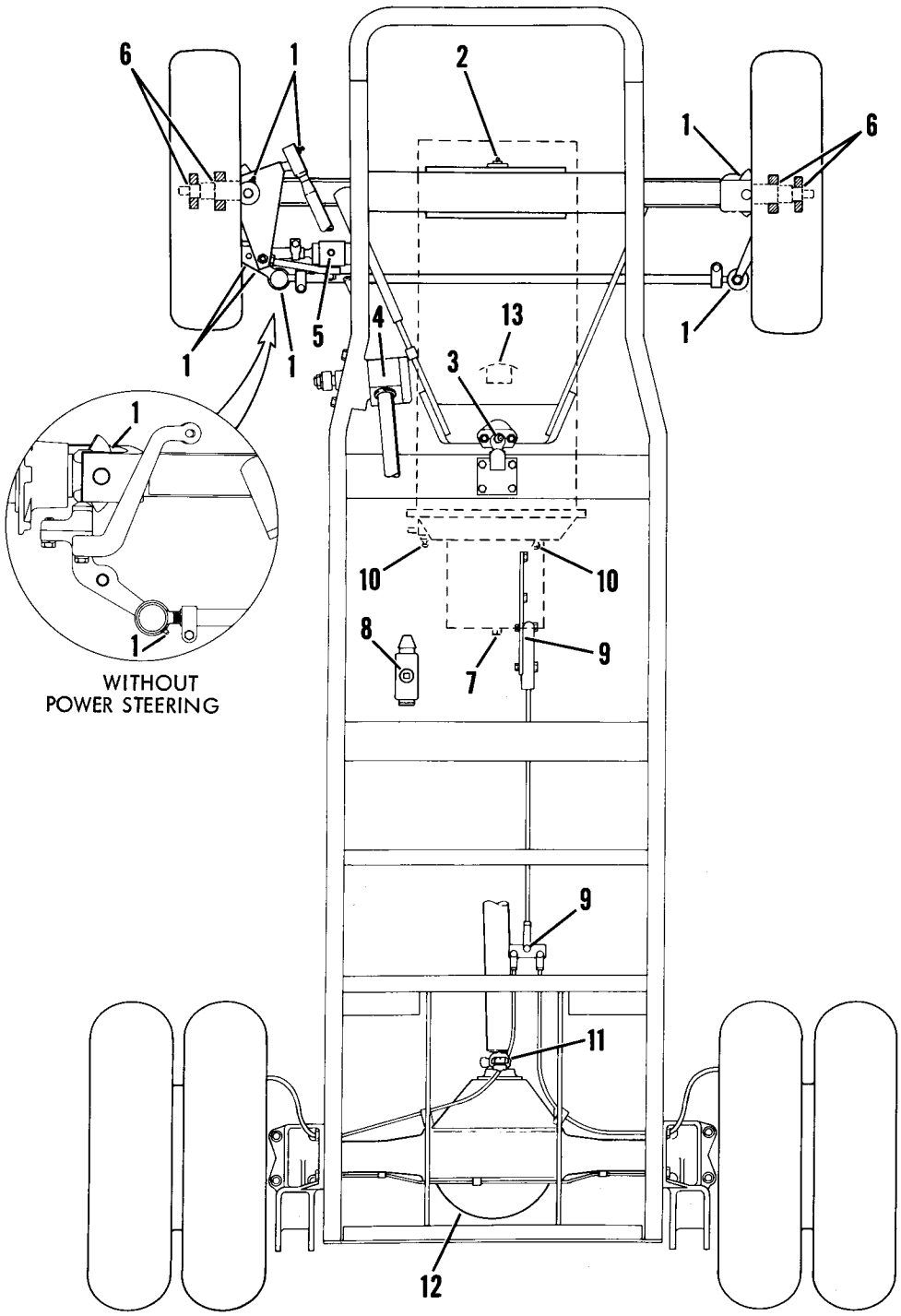

Figure 16. Lubrication Chart

PARTS CATALOG

Toro Series V Tractor

Title	Page
Wiring Diagram 12 Volt	13
Clutch Assembly	14
Instrument Panel	15
Hood, Radiator, Fuel Tank and Muffler	16
Frame, Toe Board, Floor Plate, and Battery	18
Front Wheels and Axle	20
Transmission Assembly	22
Brake, Clutch and Throttle Linkage	24
Steering Gear Assembly	26
Seat Assembly	28
Drive Shaft Assembly	29
Rear Axle Assembly (Clark)	30
Rear Wheels and Axle Shafts	32
Hydraulic Brakes	33
Rear Axle Assembly (Dana)	51

PRODUCT CHANGES

In an effort to make improvements available to Toro owners as quickly as possible, minor changes are incorporated into Toro's products from time to time that do not become immediately shown in the Owner's Operating and Parts Manual. If such a change apparently has been made in your unit, which is not reflected in your manual, see your Toro distributor or his authorized Toro service dealer for information and parts numbers.

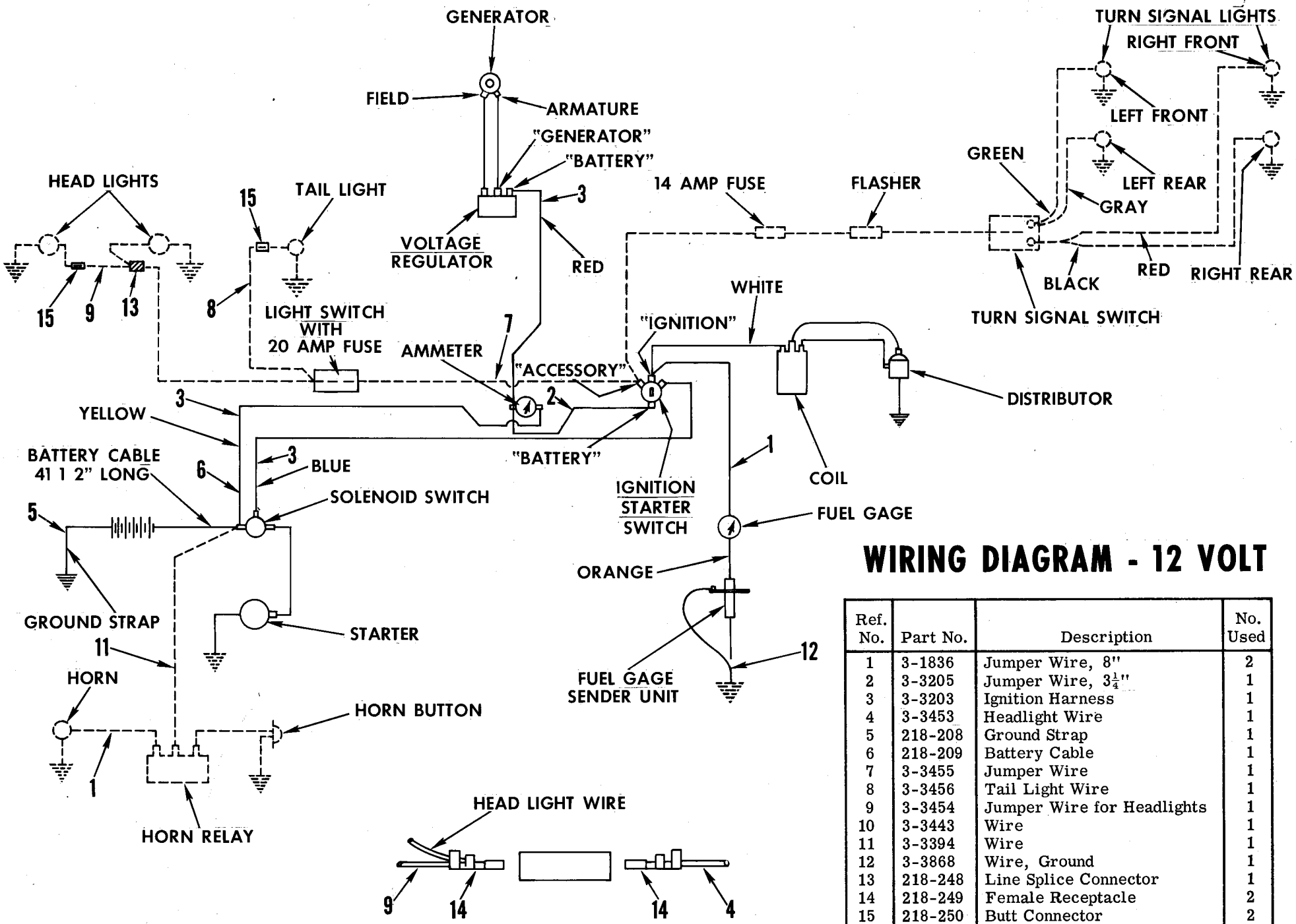

WIRING DIAGRAM - 12 VOLT

Ref. No.	Part No.	Description	No. Used
1	3-1836	Jumper Wire, 8"	2
2	3-3205	Jumper Wire, 3¼"	1
3	3-3203	Ignition Harness	1
4	3-3453	Headlight Wire	1
5	218-208	Ground Strap	1
6	218-209	Battery Cable	1
7	3-3455	Jumper Wire	1
8	3-3456	Tail Light Wire	1
9	3-3454	Jumper Wire for Headlights	1
10	3-3443	Wire	1
11	3-3394	Wire	1
12	3-3868	Wire, Ground	1
13	218-248	Line Splice Connector	1
14	218-249	Female Receptacle	2
15	218-250	Butt Connector	2

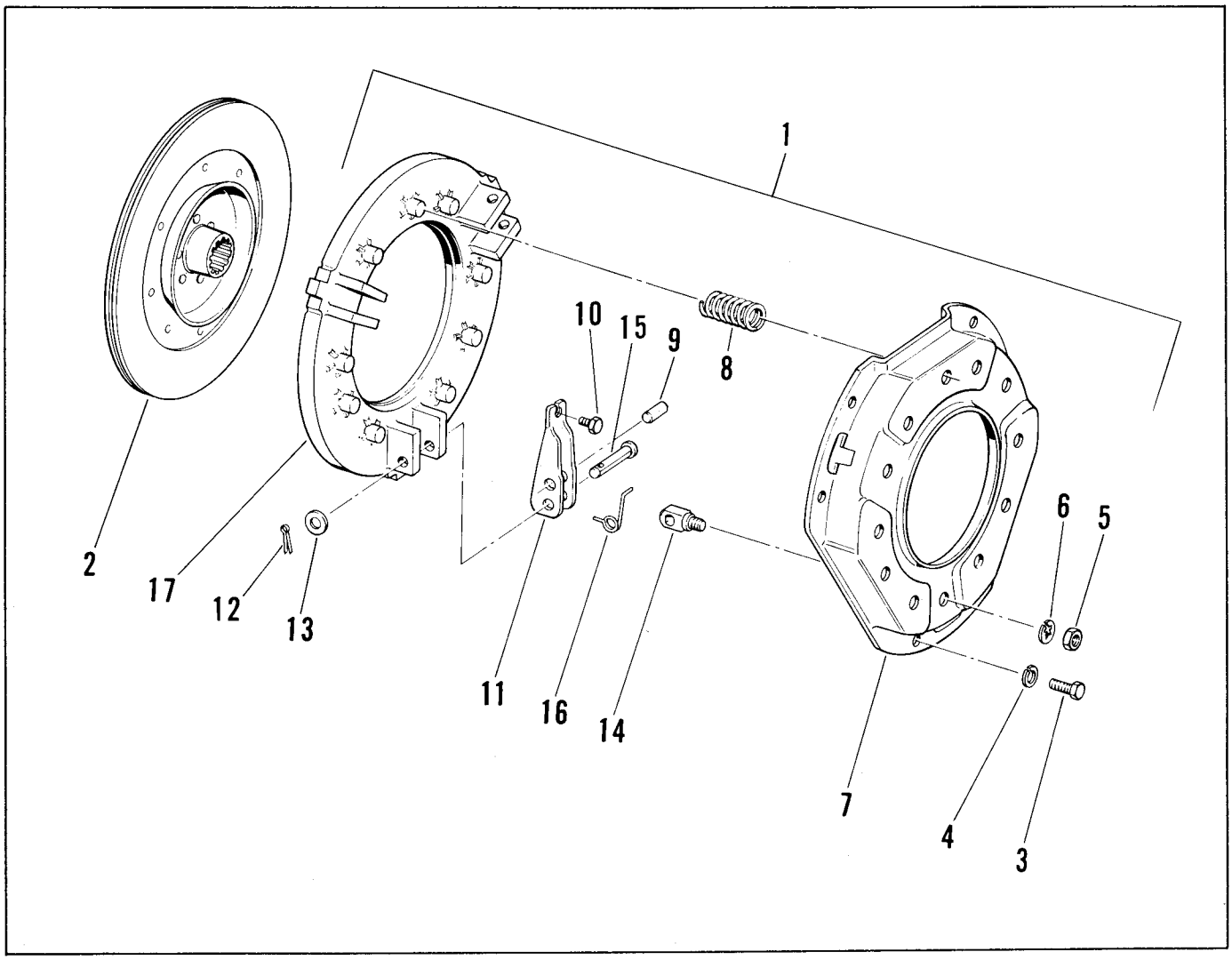

Figure 17. Clutch Assembly

Fig. & Ref. No.	Part No.	Description	No. Used
		CLUTCH ASSEMBLY	
17-1	2118-26	Clutch Cover Assembly, Complete w/Exception of Item 2	1
-2	2118-27	Clutch Plate, Driven Member Assembly	1
	*2118-42	Facing Kit, consists of two facings and necessary rivets for installation	
-3	WW-5297	Capscrew, Clutch Housing to Flywheel	6
-4	3253-21	Lockwasher, Clutch Housing to Flywheel	6
-5	2118-41	Nut, Pivot Block to Cover	3
-6	2118-29	Lockwasher, Pivot Block to Cover	3
-7	2118-30	Cover, Pressure Plate	1
-8	2118-31	Spring, Pressure	9
-9	2118-32	Pin, Pivot	3
-10	2118-33	Screw, Adjusting	3
-11	2118-34	Lever, Pressure Plate Release	3
-12	2118-35	Pin, Cotter	3
-13	2118-36	Washer, Retainer	3
-14	2118-37	Pivot Block	3
-15	2118-38	Pin, Lever	3
-16	2118-39	Spring, Lever	3
-17	2118-40	Plate, Pressure	1

* Not Illustrated

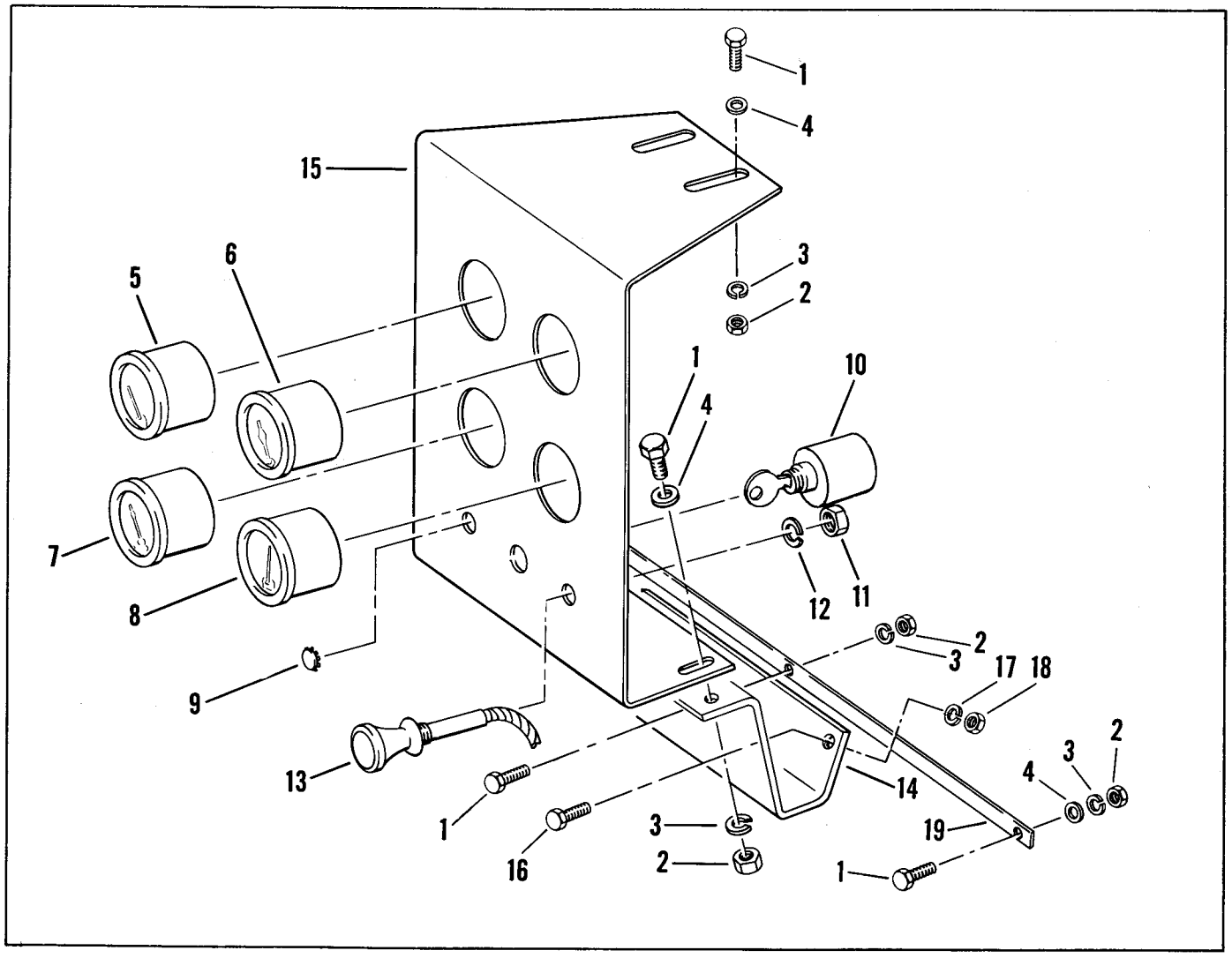

Figure 18. Instrument Panel

Fig. & Ref. No.	Part No.	Description	No. Used
		INSTRUMENT PANEL	
18-1	3210-3	Capscrew, Panel Retaining	5
-2	3219-2	Nut	5
-3	3253-4	Lockwasher	5
-4	3256-23	Flatwasher	4
-5	218-205	Gage, Fuel	1
-6	218-201	Gage, Oil Pressure	1
-7	218-206	Gage, Water Temperature	1
-8	218-202	Ammeter	1
-9	2410-13	Plug, Friction	1
+ -10	218-247	Switch, Ignition	1
-11	3220-3	Nut, Choke Retaining	1
-12	3253-21	Lockwasher	1
-13	3-3196	Choke Control	1
18-14	3-3198	Bracket, Mounting	1
-15	3-3236	Instrument Panel	1
-16	3211-3	Capscrew, Bracket Mounting	2
-17	3253-21	Lockwasher	2
-18	3219-3	Nut	2
-19	3-3831	Support, Hood Hinge	1
	*3-3203	Wiring Harness	1
	*3-3204	Clip-holds wire for voltage regulator to engine at oil filter	1
	*3-3205	Jumper wire, 3-1/4" long, ignition switch to ammeter	1
	*3-1836	Jumper wire, 8" long, ignition switch to fuel gage	1

*Not Illustrated
+Use two 3254-5 lockwashers to fit switch in old control panel.

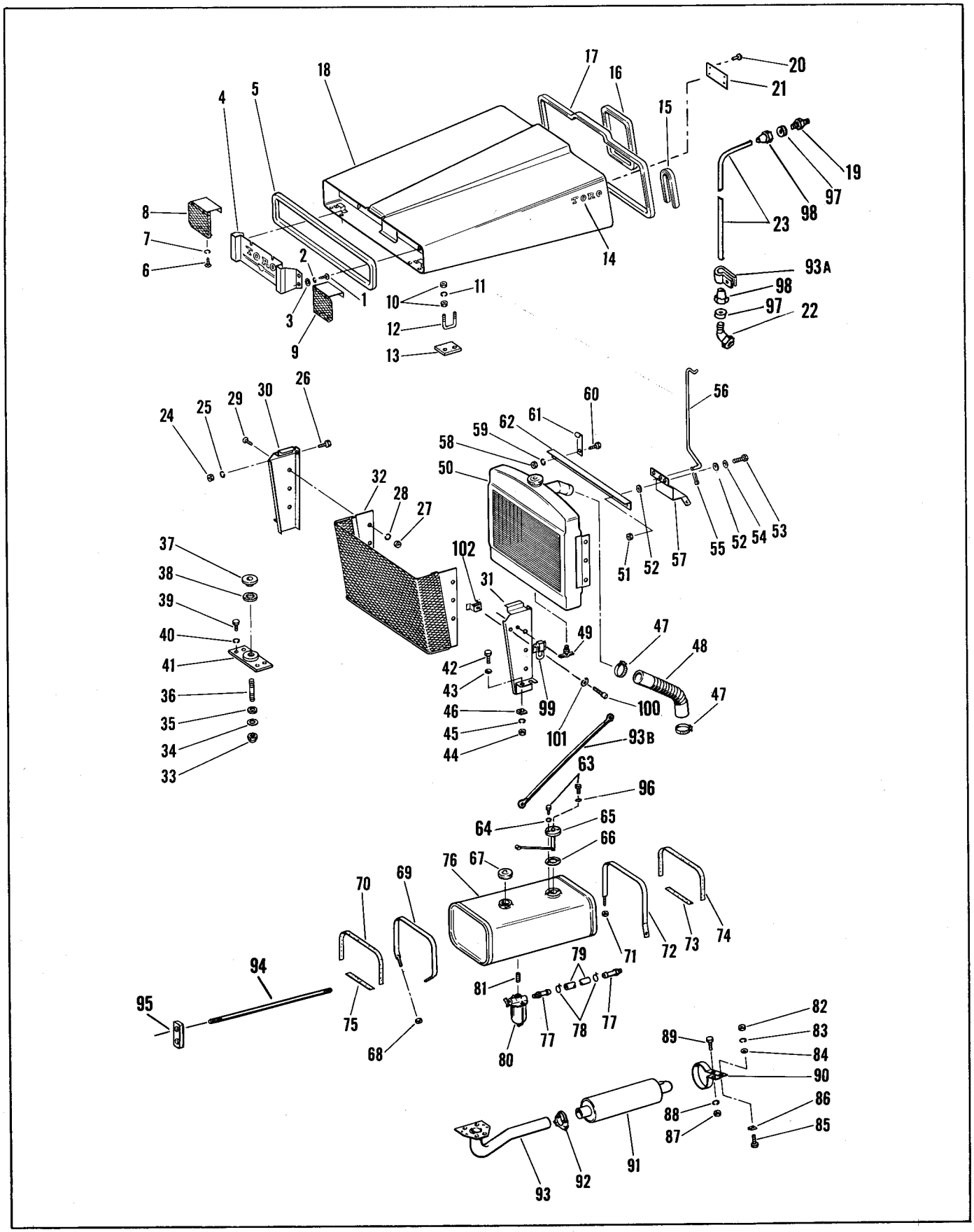

Figure 19A. Hood, Radiator, Fuel Tank and Muffler

Fig. & Ref. No.	Part No.	Description	No. Used
19A-1	32104-13	Screw, Self-tapping	4
-2	3253-17	Lockwasher	4
-3	3256-14	Flatwasher	4
-4	3-3420	Name Plate	1
-5	3-3004	Moulding, Front	1
-6	32104-13	Screw, Self-tapping	4
-7	3253-17	Lockwasher	4
-8	3-3940	Grille, Hood, Right Hand	1
-9	3-3930	Grille, Hood, Left Hand	1
-10	3217-5	Nut, U-Bolt Retaining	8
-11	3253-3	Lockwasher	4
-12	3-3207	U-Bolt	2
-13	3-3213	Bumper	2
-14	3-3225	Decal, Side Hood	2
-15	3-3007	Moulding, Steering Wheel Cut-out	1
-16	3-3006	Moulding, Instrument Panel Cut-out	1
-17	3-3005	Moulding, Rear	1
-18	3-3430	Hood	1
-19	304-69	Connector	1
-20	32104-18	Screw, Self-tapping	4
-21	3-1834	Instruction Plate	1
-22	304-70	Elbow	1
-23	3-3202	Tube, Oil	1
-24	3219-2	Nut, Mount Retaining	2
-25	3253-4	Lockwasher	2
-26	3210-3	Capscrew	2
-27	3219-2	Nut, Radiator Retaining	6
-28	3253-4	Lockwasher	6
-29	32122-2	Machine Screw	6
-30	3-9890	Side Plate, Right Hand	1
-31	3-9880	Side Plate, Left Hand	1
-32	3-3770	Grille	1
-33	32127-36	Jam Lock Nut	1
-34	3256-27	Flatwasher	1
-35	3-3461	Washer, Rubber, Lower	1
-36	3-3462	Stud	1
-37	3-3823	Cover, Front Engine Mount	1
-38	WB-245	Washer, Rubber, Upper	1
-39	2311-3	Capscrew, Engine Retaining	4
-40	3253-21	Lockwasher	4
-41	3-5270	Engine Mount, Front	1
-42	3213-3	Capscrew	4
-43	3256-26	Flatwasher	4
-44	3219-5	Nut, Side Plate Retaining	4
-45	3253-7	Lockwasher	4
-46	3290-216	Washer, Bevel	4
-47	2412-3	Hose Clamp	4
-48	2310-7	Hose, Radiator, Upper	1
-49	304-46	Drain Cock, Radiator	1
-50	2111-7	Radiator	1

Fig. & Ref. No.	Part No.	Description	No. Used
19A-51	3296-4	Lock Nut	2
-52	3-3846	Rubber Washer	2
-53	3210-6	Capscrew	2
-54	2-1590	Flatwasher	2
-55	3272-9	Pin, Cotter	1
-56	3-3133	Prop, Hood	1
-57	3-3800	Support, Fuel Tank	1
-58	3219-2	Nut	1
-59	3253-4	Lockwasher	1
-60	3210-3	Capscrew	1
-61	3-3134	Hold Down, Prop	1
-62	3-3124	Mount, Fuel Tank, Front	1
-63	3291-1	Screw	5
-64	237-49	Washer	5
-65	218-203	Sending Unit, Fuel Gage	1
-66	218-204	Gasket	1
-67	222-8	Cap, Fuel Tank	1
-68	3296-44	Nut, Fuel Tank Retaining	2
-69	3-3910	Fuel Tank Strap, Front	1
-70	3-3827	Front Strap, Felt	1
-71	3296-44	Locknut	1
-72	3-3900	Fuel Tank Strap, Rear	1
-73	3-3826	Rear Base, Felt	1
-74	3-3824	Rear Strap, Felt	1
-75	3-3828	Front Base, Felt	2
-76	3-3460	Fuel Tank Assembly	1
-77	304-68	Hose Fitting	2
-78	2412-6	Hose Clamp	2
-79	3-3842	Fuel Hose	1
-80	224-182	Sediment Bowl	1
-81	289-4	Nipple, Close	1
-82	3219-5	Nut, Bracket Retaining	2
-83	3253-7	Lockwasher	2
-84	3256-26	Flatwasher	2
-85	3213-3	Capscrew	2
-86	3290-216	Washer, Bevel	2
-87	3213-3	Nut	2
-88	3253-7	Lockwasher	2
-89	3219-5	Capscrew	2
-90	T-1017-A	Bracket, Muffler	2
-91	T-1084	Muffler	1
-92	2112-5	Clamp, Muffler	1
-93	3-3410	Exhaust Pipe	1
-93A	3-3204	Clip	1
-93B	3-3868	Wire, Fuel Tank Ground	1
*	3-3206	Clip, Oil Gauge Tube	1
-94	3-4735	Rod, Tie	1
-95	3-4758	Lug	1
-96	3254-1	S. P. Washer	1
-97	304-17	Comp. Sleeve	2
-98	304-67	Comp. Nut	2
-99	249-10	Hood Clamp	2
-100	3252-3	Fil. Hd. Screw	4
-101	3253-17	Lockwasher	4
-102	3290-235	Nut & Retainer	4

* F400K 3% LOWER RADIATOR HOSE (CONTINENTAL)

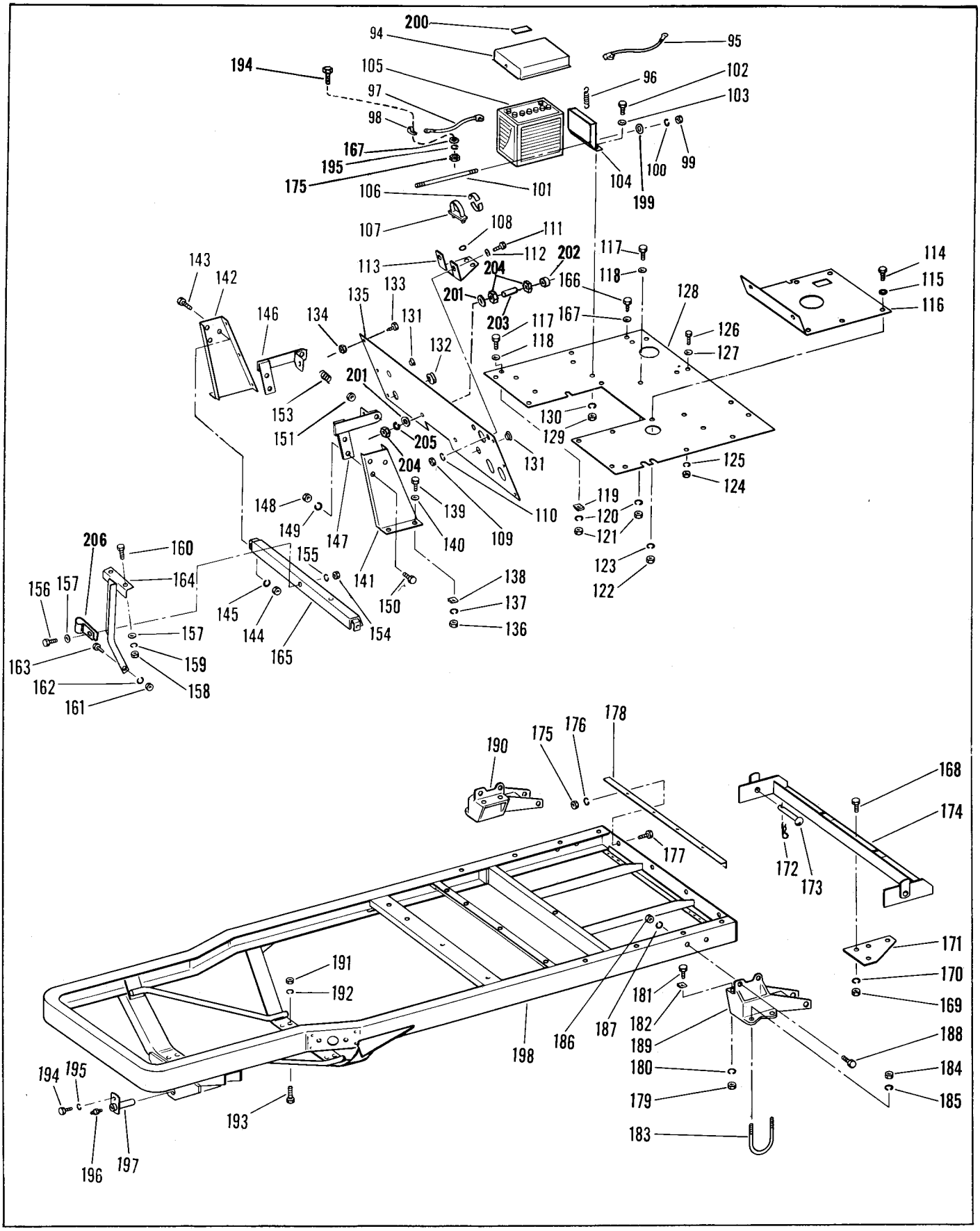

Figure 19B. Frame, Toe Board, Floor Plate and Battery

Fig. & Ref. No.	Part No.	Description	No. Used
19B-94	3-3175	Cover, Battery	1
-95	218-208	Cable, Ground	1
-96	T-1020	Spring, Cover Retaining	2
-97	218-209	Cable, Hot	1
-98	2412-10	Clip, Hot Cable Retaining	2
-99	3217-5	Nut	4
-100	3253-3	Lockwasher	4
-101	3-3174	Rod, Battery	2
-102	3211-4	Capscrew	4
-103	3256-24	Flatwasher	4
-104	3-5967	Support, Battery	2
+-105	239-6	Battery, 12 Volt	1
-106	3-2844	Saddle	2
-107	2112-6	Clamp, Muffler	1
-108	3256-23	Flatwasher	2
-109	3219-3	Nut, Bracket Retaining	3
-110	3253-21	Lockwasher	3
-111	3211-3	Capscrew	3
-112	3256-24	Flatwasher	2
-113	3-3195	Bracket, Steering Post	1
-114	3211-3	Capscrew	10
-115	3256-24	Flatwasher	2
-116	3-3157	Cover, Inspection	1
-117	3213-3	Capscrew	3
-118	3256-26	Flatwasher	5
-119	3290-216	Washer, Bevel	2
-120	3253-7	Lockwasher	5
-121	3219-5	Nut, Floor Plate Retaining	5
-122	3219-3	Nut, Cover Retaining	10
-123	3253-21	Lockwasher	10
-124	3219-3	Nut	2
-125	3253-21	Lockwasher	2
-126	3211-3	Capscrew	2
-127	3256-24	Flatwasher	2
-128	3-3145	Floor Plate	1
-129	3219-3	Nut, Battery Support Retaining	4
-130	3253-21	Lockwasher	4
-131	2410-10	Plug Button	2
-132	237-41	Grommet, Insulating	1
-133	32100-2	Screw, Self-tapping	6
-134	32127-8	Locknut	6
-135	3-3155	Toe Board	1
-136	3219-5	Nut, Panel Retaining	4
-137	3253-7	Lockwasher	4
-138	3290-216	Washer, Bevel	4
-139	3213-3	Capscrew	4
-140	3256-26	Flatwasher	4
-141	3-3520	Side Panel, Rear, Left Hand	1
-142	3-3530	Side Panel Rear, Right Hand	1
-143	3211-3	Capscrew	2
-144	3219-3	Nut, Channel Retaining	2
-145	3253-21	Lockwasher	2
-146	3-3840	Hinge, Right Hand	1
-147	3-3830	Hinge, Left Hand	1
-148	3219-3	Nut, Hinge Retaining	4
-149	3253-21	Lockwasher	4

Fig. & Ref. No.	Part No.	Description	No. Used
19B-150	3211-3	Capscrew	4
-151	3296-28	Locknut, Hood Retaining	2
-153	3-2341	Spring, Hood Hinge	2
-154	3219-2	Nut, Bracket Retaining	1
-155	3253-4	Lockwasher	1
-156	3210-3	Capscrew	1
-157	3256-23	Flatwasher	3
-158	3219-2	Nut	2
-159	3253-4	Lockwasher	2
-160	3210-3	Capscrew	2
-161	3219-2	Nut, Bracket Retaining	1
-162	3253-4	Lockwasher	1
-163	3210-3	Capscrew	1
-164	3-3920	Bracket, Instrument Panel	1
-165	3-3850	Support Channel	1
-166	32104-6	Screw, Self-ta ping	4
-167	3256-24	Flatwasher	6
-168	328-2	Capscrew	2
-169	3217-12	Nut, Drawbar Retaining	2
-170	3253-9	Lockwasher	2
-171	3-3218	Hitch, Drawbar	1
-172	3290-256	Hair Pin Cotter	2
-173	JT-406	Pin, Retaining	2
-174	3-3950	Drawbar	1
-175	3219-3	Nut, Support Retaining	6
-176	3253-21	Lockwasher	4
-177	3211-4	Capscrew	4
-178	3-3223	Angle Support	1
-179	3219-5	Nut	4
-180	3253-7	Lockwasher	4
-181	3213-4	Capscrew	4
-182	3290-216	Washer, Bevel	4
-183	TAC-470A	U-Bolt, Bracket Retaining	4
-184	3219-6	Nut, Bracket Retaining	8
-185	3253-8	Lockwasher	8
-186	3219-6	Nut, Bracket Retaining	4
-187	3253-8	Lockwasher	4
-188	3214-4	Capscrew	4
-189	3-2977	Bracket, Axle Mounting, Left Hand	1
-190	3-2978	Bracket, Axle Mounting, Right Hand	1
-191	3219-5	Nut, Rear Engine Retaining	4
-192	3253-7	Lockwasher	4
-193	3213-5	Capscrew	4
-194	3211-4	Capscrew	3
-195	3253-21	Lockwasher	3
-196	302-2	Grease Fitting	1
-197	3-3760	Pin, Pivot	1
-198	3-3570	Frame	1
-199	3256-2	Washer	4
-200	3-5582	Decal	1
-201	WW-5333	Washer	2
-202	T-316A	Button	1
-203	T-1182	Stud	1
-204	3219-2	Nut	3
-205	3253-4	Lockwasher	1
-206	2412-4	Hose Clip	1

+ Obtain locally

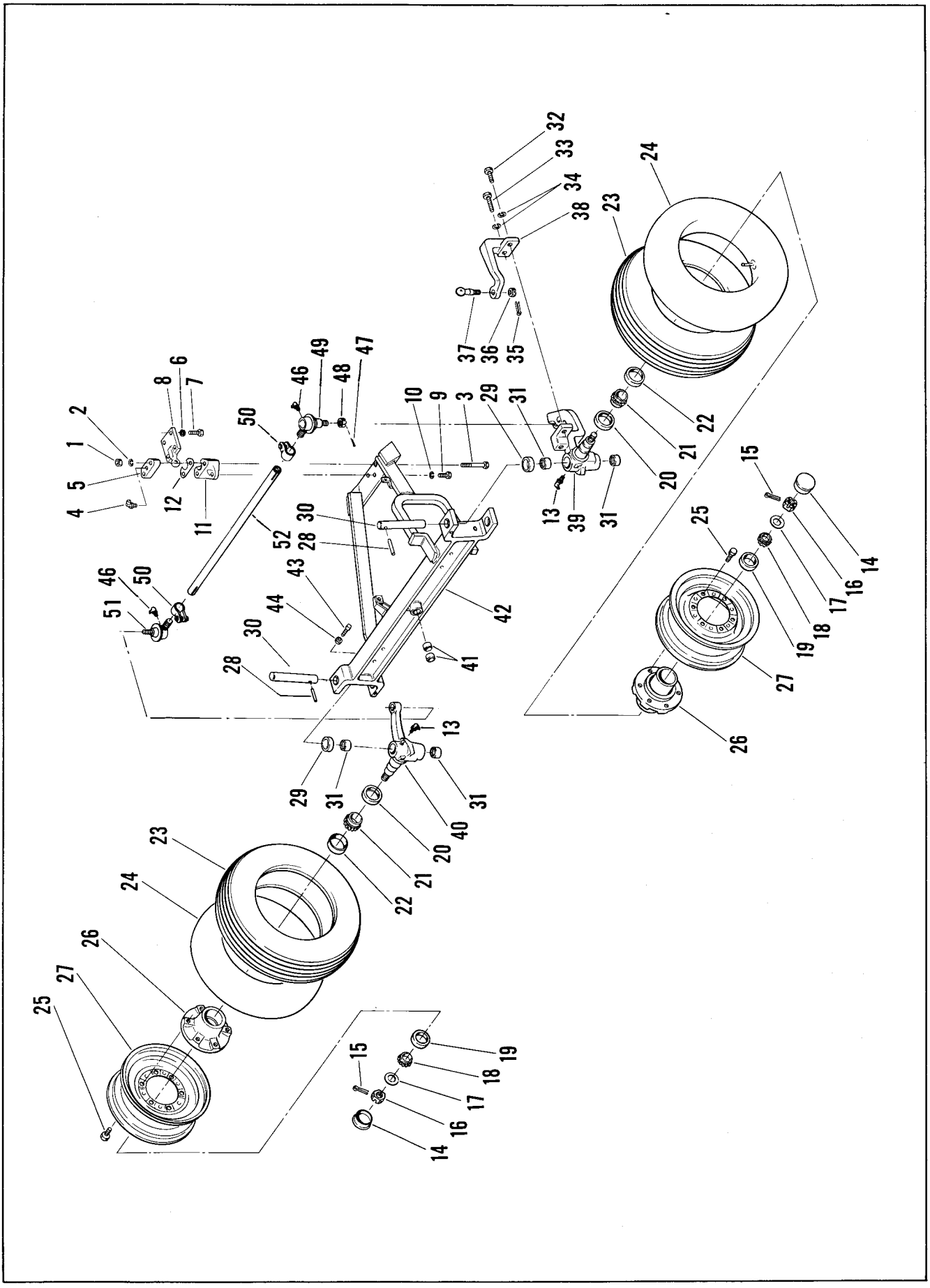

Figure 20. Front Wheels and Axle

Fig. & Ref. No.	Part No.	Description	No. Used
		FRONT WHEELS AND AXLE	
20-1	3219-6	Nut, Upper Ball Socket Retaining	2
-2	3253-8	Lockwasher	2
-3	3214-13	Capscrew	2
-4	302-33	Grease Fitting	1
-5	3-2967	Upper Ball Socket	1
-6	3253-7	Lockwasher	4
-7	3213-3	Capscrew	4
-8	3-4000	Pivot Ball	1
-9	327-4	Capscrew, Lower Ball Socket Retaining	1
-10	3253-8	Lockwasher	1
-11	3-2968	Lower Ball Socket	1
-12	3-3825	Shim	4
-13	302-33	Grease Fitting	2
-14	217-33	Hub Cap	2
-15	3272-24	Pin, Cotter	2
-16	32136-1	Nut, Slotted Hex	2
-17	3256-9	Cut Washer	2
-18	254-42	Bearing, Cone, Outer	2
-19	254-20	Bearing, Cup, Outer	2
-20	253-100	Seal, Dust	2
-21	254-75	Bearing, Cone, Inner	2
-22	254-76	Bearing, Cup, Inner	2
-23	231-30	Tire, Front	2
-24	232-17	Tube, Inner	2
-25	217-34	Bolt, Wheel Retaining	12
-26	217-35	Hub, Front	2
-27	217-27	Wheel, Front	2
-28	32121-34	Pin, Retaining	2
20-29	251-32	Bearing, Thrust	2
-30	3-3084	Pin, Spindle	2
-31	252-52	Bearing, Needle	4
-32	3213-3	Capscrew, Drag Link Retaining	1
-33	3213-7	Capscrew	1
-34	3253-7	Lockwasher	2
-35	3272-7	Pin, Cotter	1
-36	32101-2	Nut, Slotted Hex	1
-37	T-66	Ball, Stud	1
-38	3-2976	Arm, Drag Link	1
-39	3-3560	Spindle, Steering, Left Hand	1
-40	3-3550	Spindle, Steering, Right Hand	1
-41	256-126	Bushing, Front Axle	2
-42	3-3590	Front Axle and Wishbone	1
-43	32102-14	Setscrew, Radius Adjustment	2
-44	3218-5	Jam Nut	2
	*3-3710	Tie Rod Assembly, Includes items 46 thru 52	1
-46	302-33	Grease Fitting	2
-47	3272-12	Pin, Cotter	2
-48	32136-2	Nut, Slotted Hex	2
-49	2116-3	Ball Joint End, Left Hand Thread	1
-50	2412-7	End Clamp Assembly	2
-51	2116-4	Ball Joint End, Right Hand Thread	1
-52	2116-9	Tie Rod Tube	1

*Not Illustrated

IMPORTANT ORDERING INSTRUCTIONS

Repair parts are available from your Toro distributor or service dealer.

To insure getting correct parts without delay, please furnish the following information:

1. Serial number of your tractor as shown in the name plate.
2. Part number, description and quantity of each part required.
3. State whether parts should be shipped by mail or express. All repair parts are shipped F. O. B. factory.
4. Name and address where parts are to be shipped.
5. Do not order by reference number; use part number only.

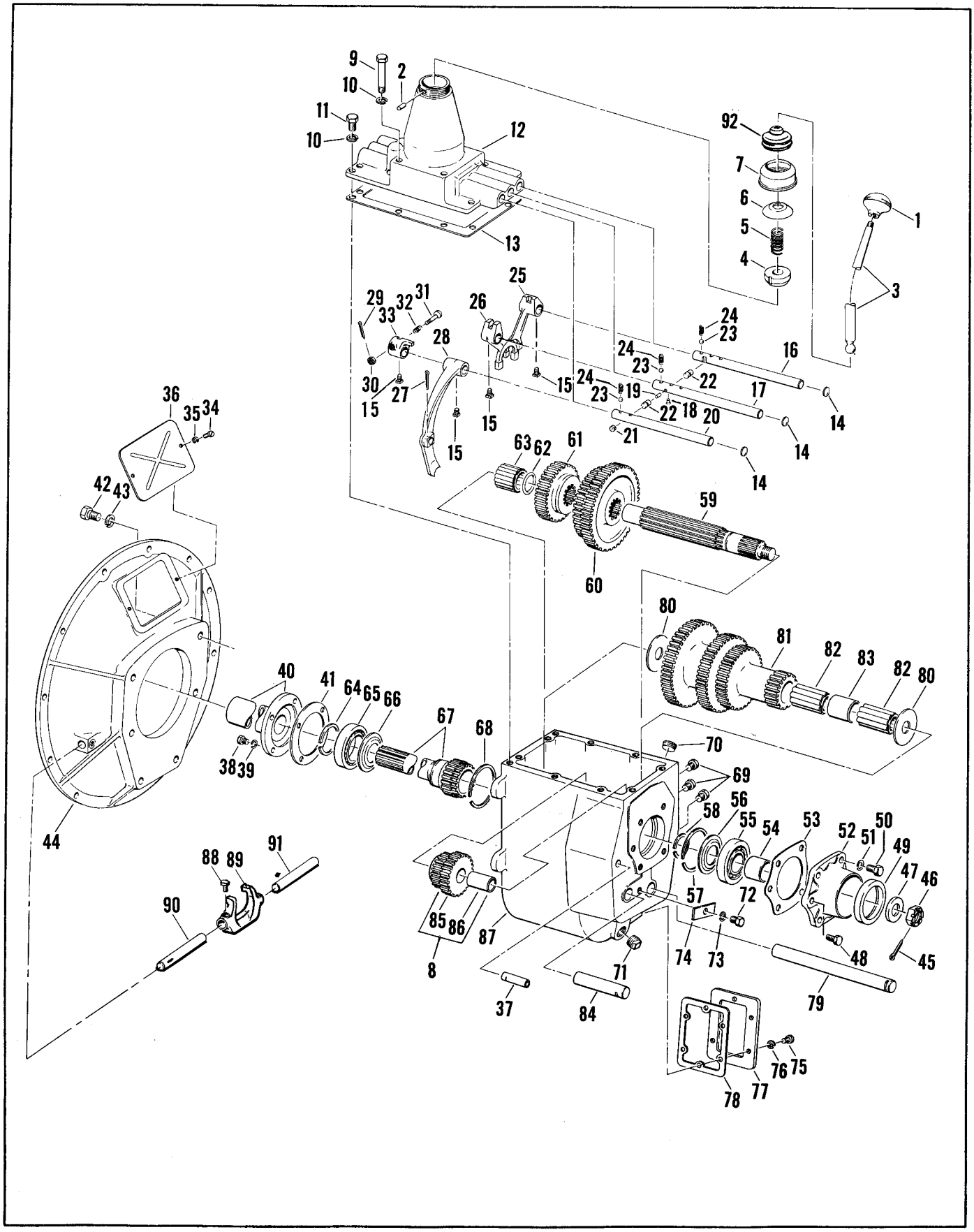

Figure 21. Transmission Assembly

Fig. & Ref. No.	Part No.	Description	No. Used
		TRANSMISSION ASSEMBLY	
	2119-160	Transmission Assembly, Complete	1
21-1	C37J-50A	Knob, Gear Shift	1
-2	4499A	Pin, Retaining	1
-3	AC9A-2	Lever, Gear Shift	1
-4	C8-2-1/2C	Ball, Shift Lever	1
-5	4498B	Spring	1
-6	4497	Cup, Spring Retaining	1
-7	4496K	Cap, Lever Housing	1
-8	AT9A-10	Reverse Gear and Bushing Assembly	1
-9	190911	Capscrew, Cover Retaining	2
-10	103321	Lockwasher	12
-11	179838	Capscrew, Cover Retaining	10
-12	T8G-148A	Cover, Shift Linkage	1
-13	T9-115	Gasket, Cover	1
-14	103892	Plug	3
-15	4418	Setscrew	4
-16	T8A-21	Rod, 1st & 2nd Gear	1
-17	T8A-20	Rod, 2nd & 3rd Gear	1
-18	4447	Pin, Retaining	1
-19	4446A	Pin	1
-20	T8-99A	Rod, Reverse Gear	1
-21	X2850S	Plug	1
-22	T8-86	Interlock Pawl	2
-23	453593	Ball, Detent	3
-24	T8B-42	Spring, Detent	3
-25	T8-24	Shift Fork, 1st & 2nd Gear	1
-26	T8-23	Shift Fork, 3rd & 4th Gear	1
-27	103386	Pin, Cotter	1
-28	T8-51	Shift Fork, Reverse Gear	1
-29	103361	Pin, Cotter	1
-30	102643	Nut, Spring Retaining	1
-31	T9A-40	Plunger, Reverse Shift	1
-32	T9A-39	Spring	1
-33	T9A-37	Socket, Reverse Gear	1
-34	117290	Screw, Plate Retaining	2
-35	108579	Lockwasher	2
-36	T9-74	Plate, Inspection	1
-37	T8-52	Rod, Reverse Fork Guide	1
-38	179816	Capscrew, Throw-Out Sleeve Retaining	4
-39	4801A	Lockwasher	4
-40	T9-6H	Throw-Out Sleeve	1
-41	T9-145	Gasket	1
21-42	179883	Capscrew, Clutch Housing Retaining	6
-43	103323	Lockwasher	6
-44	T9-1-1/2	Clutch Housing	1
-45	103387	Pin, Cotter	1
-46	T9-50P	Nut, Slotted	1
-47	T9-50-1/2G	Washer, Flat	1
-48	179847	Capscrew (in item 52)	1
-49	T9-110	Oil Seal	1
-50	179839	Capscrew, Bearing Housing Retaining	4
-51	103321	Lockwasher	5
-52	T9-7D	Bearing Housing	1
-53	T9-145-1/2	Gasket	1
-54	T9-75-1/2V	Spacer	1
-55	X3220	Bearing, Rear	1
-56	T8-137	Grease Shield	1
-57	T8-7-1/2	Ring, Retaining	1
-58	T69-137	Ring, Retaining	1
-59	T9-2G	Shaft, Output	1
-60	T9-12W	Gear, 1st & 2nd	1
-61	T9A-11	Gear, 3rd & 4th	1
-62	T8-25	Retaining Ring	1
-63	X4044	Bearing, Front, Inner	1
-64	4495	Ring, Retaining	1
-65	X3206	Bearing, Front	1
-66	T8-136	Grease Shield	1
-67	T9-16X	Shaft, Clutch	1
-68	T8-6-1/2	Ring, Retaining	1
-69	X775	Capscrew	3
-70	X1502S	Plug, Filler and Level	1
-71	103881	Plug, Drain	1
-72	179837	Capscrew	1
-73	103321	Lockwasher	1
-74	4501	Plate, Lock	1
-75	179837	Capscrew, Cover Retaining	6
-76	103321	Lockwasher	6
-77	T53-160B	Plate, Cover	1
-78	T9-150	Gasket	1
-79	T9-3P	Countershaft	1
-80	T9-30V	Thrust Washer	2
-81	T8C-8A	Cluster Gear	1
-82	X4038	Bearing, Roller	2
-83	T8-28A	Spacer	1
-84	T8-35	Shaft, Reverse Gear	1
-85	T9A-10	Gear, Reverse	1
-86	T8-85	Bushing, Reverse Gear	1
-87	T9-1YY	Housing, Transmission	1
-88	5573	Setscrew	2
-89	T64J-360D	Fork, Throw-Out Bearing	1
-90	T9-311XX	Shaft, Fork Linkage	1
-91	T9-310	Shaft, Fork Support	1
+-92	3-6184	Dust Cover	1

Warner gear part numbers are listed for identification only. Obtain locally, or from Warner Gear Division, Borg-Warner Corporation, Muncie, Indiana.

*Not Illustrated

+ Toro Part - Available from Toro

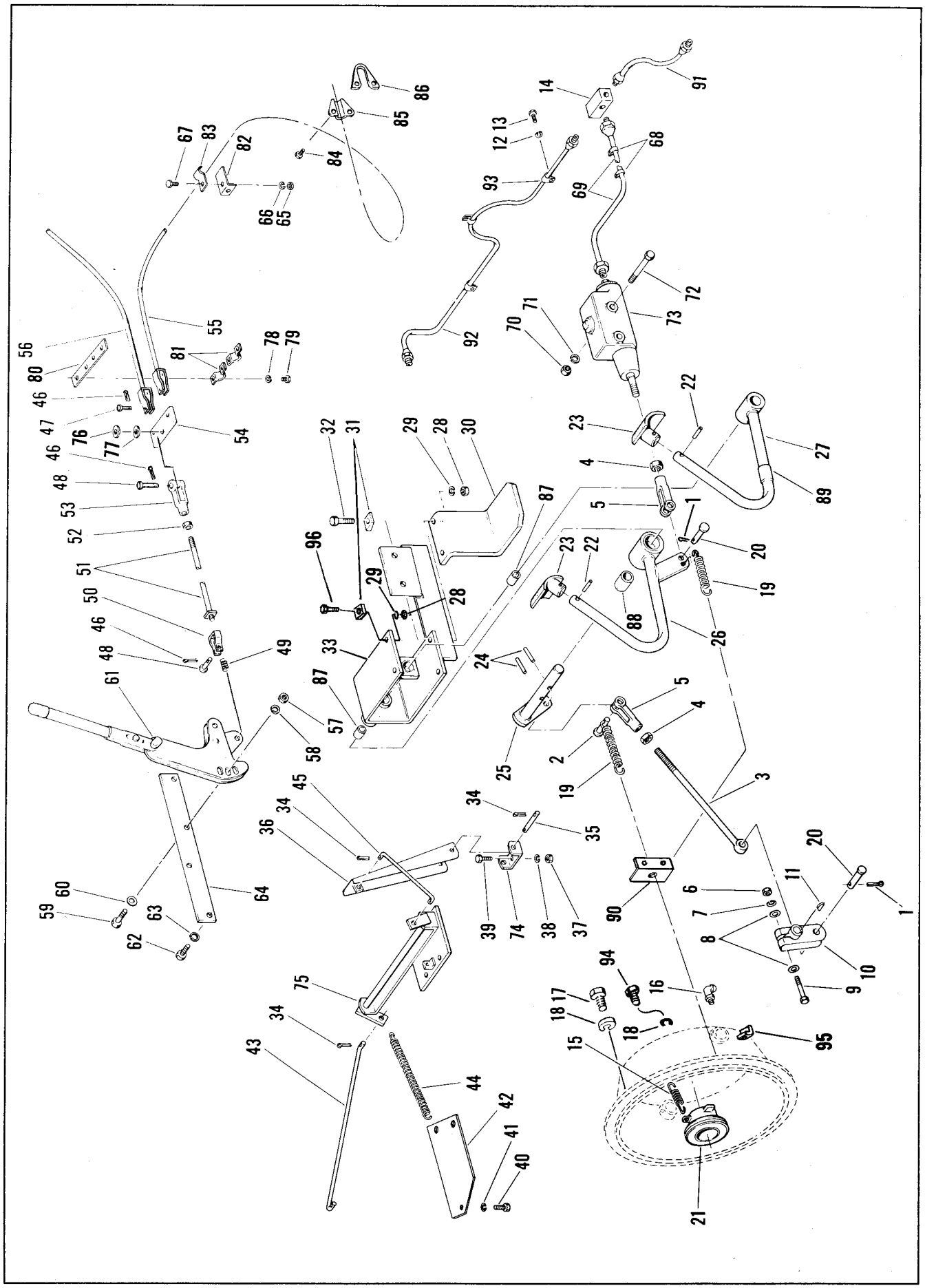

Figure 22. Brake, Clutch and Throttle Linkage

Fig. & Ref. No.	Part No.	Description	No. Used
		Brake, Clutch and Throttle Linkage	
22-1	3272-6	Pin, Cotter	2
-2	3-3092	Pin, Retaining	1
-3	3-3091	Link, Clutch Adjusting	1
-4	3220-3	Nut, Jam	2
-5	282-1	Yoke, Clutch and Brake	2
-6	3219-3	Nut	1
-7	3253-21	Lockwasher	1
-8	3256-24	Flatwasher	2
-9	3211-10	Capscrew	1
-10	3-3720	Lever, Clutch	1
-11	3257-5	Key, Woodruff	1
-12	3254-6	Lockwasher	2
-13	323-3	Capscrew	2
-14	304-2	Tee	1
-15	212-184	Spring, Throw-Out Return	1
-16	302-33	Grease Fitting 90°	2
-17	323-7	Capscrew	11
-18	3253-21	Lockwasher	12
-19	1-P-44	Spring, Pedal Return	2
-20	283-2	Yoke Pin	2
-21	2118-25	Bearing, Throw-Out Assembly	1
-22	32121-34	Pin, Retaining	2
-23	3-2982	Pedal Pad	2
-24	32121-34	Pin, Retaining	2
-25	3-3730	Shaft, Clutch Pedal	1
-26	3-8760	Brake Pedal and Bushing Assembly	1
-27	3-3750	Clutch Pedal	1
-28	3219-5	Nut, Step, Retaining	4
-29	3253-7	Lockwasher	4
-30	3-3112	Step	1
-31	3290-216	Washer, Bevel	4
-32	3213-5	Capscrew	2
-33	3-3740	Pedal Shaft Bracket Assembly	1
-34	3272-5	Pin, Cotter	6
-35	3-3167	Pin, Retaining	1
-36	3-3860	Pedal, Foot Feed	1
-37	3219-2	Nut, Bracket Retaining	2
-38	3253-4	Lockwasher	2
-39	3210-3	Capscrew	2
-40	3211-1	Capscrew	2
-41	3253-21	Lockwasher	6
-42	3-3186	Spring Retainer	1
-43	3-3815	Rod, Throttle	1
-44	F-314	Spring, Throttle Return	1
-45	3-3168	Link, Foot Feed Pedal	1
-46	3272-6	Pin, Cotter	4
-47	283-1	Yoke Pin	2
22-48	283-2	Yoke Pin	2
-49	3-1768	Spring, Tension	1
-50	3-5300	Clevis, Front	1
-51	3-1772	Rod, Adjustable	1
-52	3220-3	Nut, Jam	1
-53	282-1	Clevis, Rear	1
-54	3-3137	Plate, Equalizer	1
-55	3-3142	Cable Assembly, Left Hand	1
-56	3-3141	Cable Assembly, Right Hand	1
-57	3219-3	Nut, Retaining	2
-58	3253-21	Lockwasher	2
-59	3211-8	Capscrew	2
-60	3256-24	Flatwasher	2
-61	215-22	Hand Brake Lever Assembly	1
-62	323-7	Capscrew	2
-63	3253-21	Lockwasher	2
-64	3-3135	Bracket, Brake Lever	1
-65	3219-2	Nut, Cable Retaining	4
-66	3253-4	Lockwasher	4
-67	3210-3	Capscrew	4
-68	212-93	Clip, Tubing Retaining	3
-69	3-3700	Brake Tubing Assembly	1
-70	3219-4	Nut, Master Cylinder Retaining	2
-71	3253-6	Lockwasher	2
-72	3212-14	Capscrew	2
-73	215-17	Master Cylinder Assembly	1
-74	3-3166	Bracket, Foot Feed	1
-75	3-3890	Bell Crank, Foot Feed	1
-76	3290-211	Spring Washer	1
-77	3256-4	Flatwasher	1
-78	3253-21	Lockwasher	4
-79	323-18	Capscrew	4
-80	3-3138	Spacer	1
-81	215-23	Clamp	2
-82	3-3143	Bracket	4
-83	3-3144	Clamp	4
-84	32104-32	Self-tapping Screw	4
-85	215-20	Conduit Cap	2
-86	215-21	Felt Seal	2
-87	256-56	Bushing	2
-88	256-143	Bushing, Brake Pedal	2
-89	3-3107	Rubber Bumper	1
-90	3-3895	Clip for Pedal Springs	1
-91	3-3680	Brake Tube Assembly, Short	1
-92	3-3690	Brake Tube Assembly, Long	1
-93	3-3075	Clip	3
-94	323-6	Capscrew-3/8 NC x 1" Lg. Opposite Starter	1
-95	3-4062	Limit Clip	1
-96	3213-3	Capscrew	2

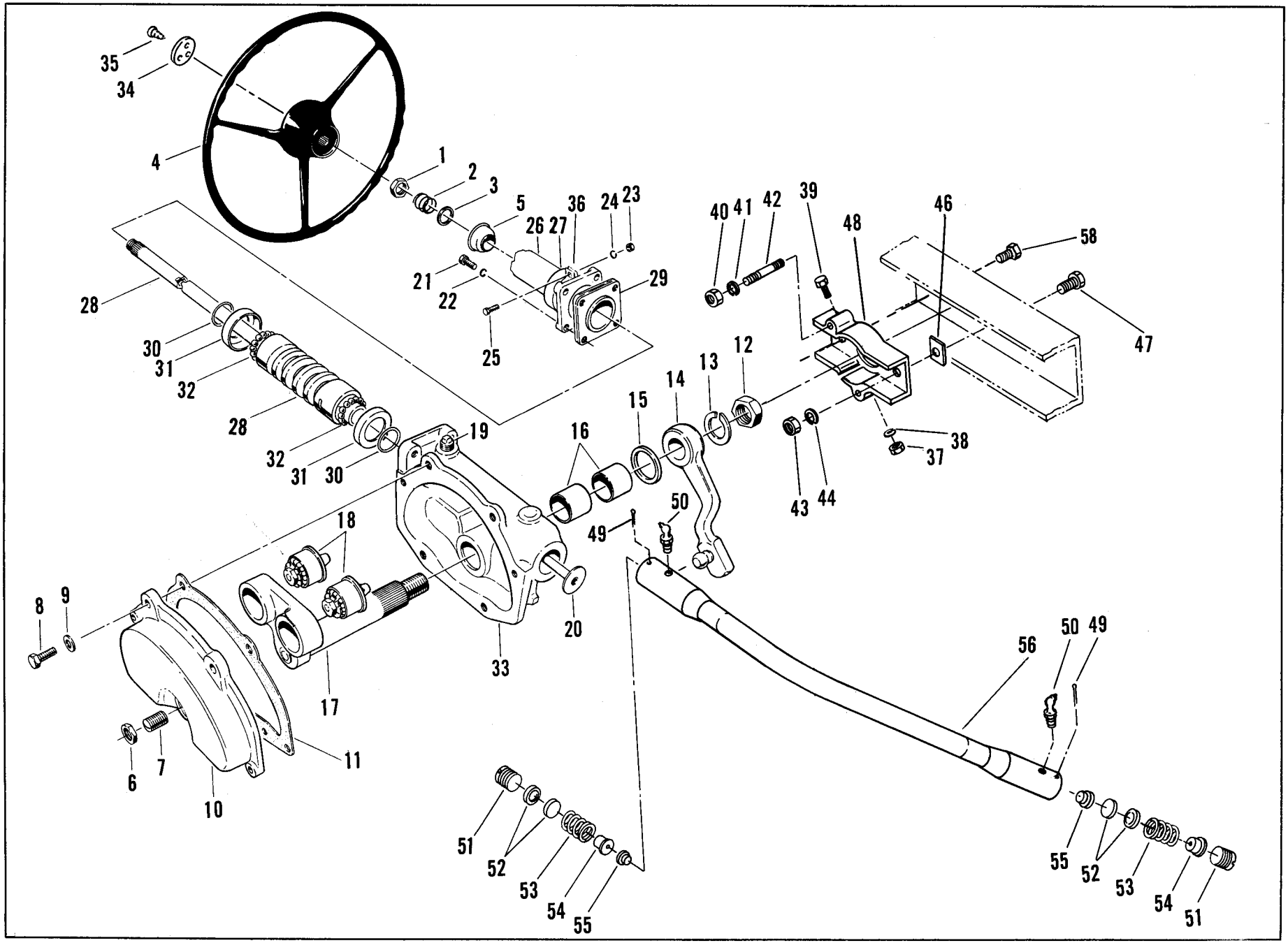

Figure 23. Steering Gear Assembly

Fig. & Ref. No.	Part No.	Description	No. Used
		STEERING GEAR ASSEMBLY	
23-	213-102	Steering Gear Complete Less items 4 and 14	
-1	213-12	Nut, Steering Wheel Retaining	1
-2	213-19	Spring	1
-3	213-106	Spring Seat	1
-4	238-1	Steering Wheel	1
-5	213-18	Bearing, Steering Shaft	1
-6	213-29	Locknut, Adjusting Screw Retaining	1
-7	213-28	Screw, Adjusting	1
-8	322-6	Capscrew, Side Cover Retaining	6
-9	213-163	Washer, Side Cover Retaining	6
-10	213-111	Cover, Side	1
-11	213-107	Gasket, Side Cover	1
-12	213-25	Nut, Steering Arm Retaining	1
-13	3253-10	Lockwasher	1
-14	3-3490	Ball and Arm Assembly	1
-15	213-9	Oil Seal	1
-16	213-6	Bushing, Lever Shaft	2
-17	213-109	Levershaft	1
-18	213-110	Bearing Assembly Sold in Matched Sets Only	1
-19	281-1	Plug, Oil Fill	1
-20	213-114	End Cover Assembly	1
-21	322-3	Capscrew, Upper Cover Retaining	4
-22	213-163	Washer, Upper Cover Retaining	4
-23	3219-2	Nut, Jacket Tube Retaining	1
-24	3254-2	Lockwasher	1
-25	3210-10	Capscrew	1
-26	213-117	Tube, Jacket, Assembly Includes item 5	1

Fig. & Ref. No.	Part No.	Description	No. Used
23-27	213-112	Upper Cover	1
-28	213-116	Cam and Tube Assembly	1
-29	213-50	Shim, 0.002" Thick	1
-29	213-51	Shim, 0.003" Thick	1
-29	213-52	Shim, 0.010" Thick	1
-30	213-46	Snap Ring, Bearing Retaining	2
-31	213-105	Ball Cup	2
-32	255-9	Ball	2
-33	213-108	Housing Assembly Includes items 15 and 16	1
-34	213-31	Wheel Cap	1
-35	213-32	Wood Screw	3
-36	213-22	Clamp	1
-37	3219-3	Nut, Steering Gear Retaining	1
-38	3253-21	Lockwasher	1
-39	3211-9	Capscrew	1
-40	3219-5	Nut	2
-41	3253-7	Lockwasher	2
-42	3-3127	Stud	2
-43	3219-6	Nut, Mounting Bracket Retaining	2
-44	3253-8	Lockwasher	2
-46	3-3128	Shim	1
-47	3214-5	Capscrew	1
-48	3-2981	Bracket, Gear Retaining	1
-49	3272-15	Cotter Pin, Drag Link Retaining	2
-50	302-33	Grease Fitting	2
-51	2116-5	End Plug	2
-52	2116-6	Spherical Seat	4
-53	2116-7	Spring	2
-54	2116-11	Spring Seat	2
-55	2116-8	Inner Plug	2
-56	2116-10	Drag Link Tube	1
-57	3-3480	Drag Link Assembly, Complete, Includes Refs. 50 thru 56	1
-58	3214-3	Capscrew	1

Use 3-6670 on Loadmaster

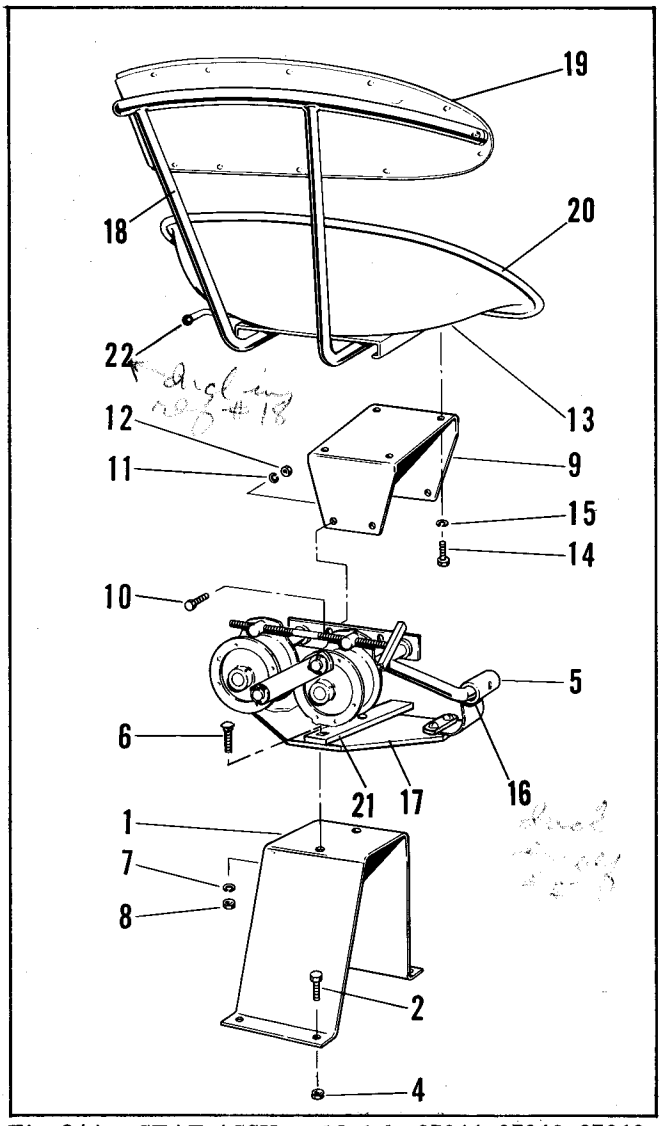

Fig. 24A - SEAT ASSY. - Models 37011, 37012, 37013.

Fig. & Ref. No.	Part No.	Description	No. Used
24A-1	3-3171	Seat Base	1
-2	3211-5	Capscrew	4
-4	32127-15	Nut	4
-5	315-8	Seat Support Assembly	1
-6	3232-2	Bolt	2
-7	3253-6	Lockwasher	2
-8	3217-8	Nut	2
-9	3-3172	Seat Attachment Brkt.	1
-10	3211-4	Capscrew	4
-11	3253-21	Lockwasher	4
-12	3219-3	Nut	4
-13	351-12	Lower Slide	1
-14	322-3	Capscrew	4
-15	3253-4	Lockwasher	4
-16	256-135	Bushing	4
-17	351-11	Base Plate	1
-18	351-13	Frame	1
-19	351-14	Back Rest	1
-20	351-15	Cushion	1
-21	3-5027	Cover Plate	1
-22	351-23	Plunger Repair Kit	1

*Not Illustrated

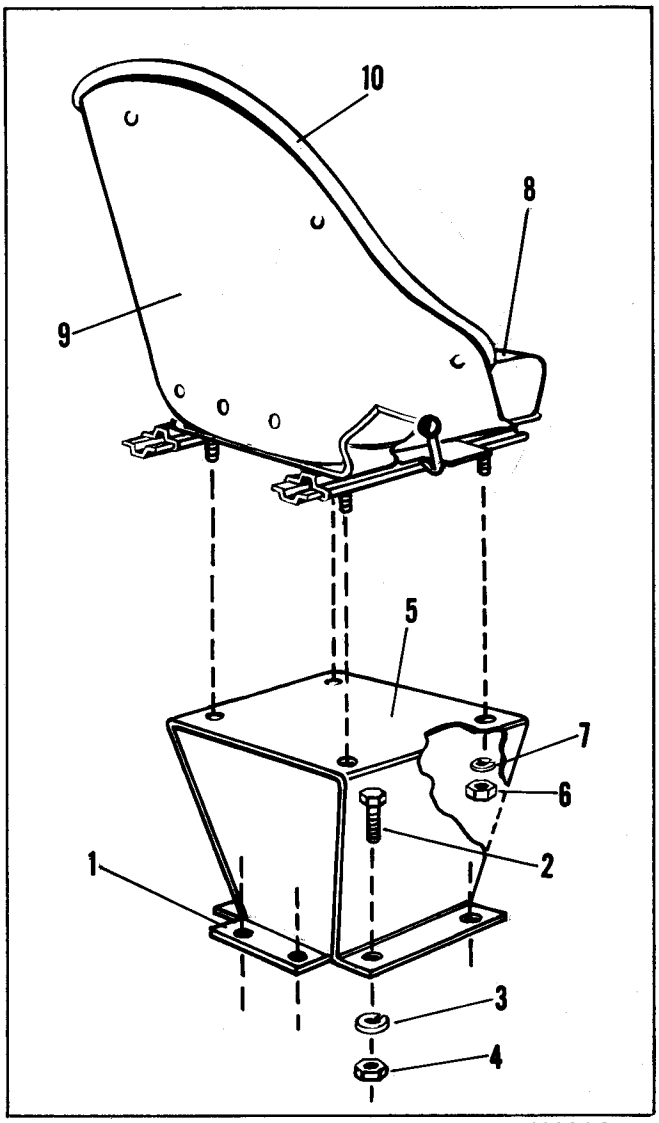

Fig. 24B - SEAT ASSY. - Model No. 37013-40001 & up.

Fig. & Ref. No.	Part No.	Description	No. Used
24B-1	3-6297	Seat Base, Lower	1
-2	3211-5	Capscrew	8
-3	3253-21	Lockwasher	8
-4	3219-3	Nut	8
-5	3-6298	Seat Base, Upper	1
-6	3219-2	Nut	4
-7	3253-24	Lockwasher	4
-8	351-20	Seat Cushion	1
-9	351-19	Shell Assembly	1
-10	351-21	Back Rest Cushion	1

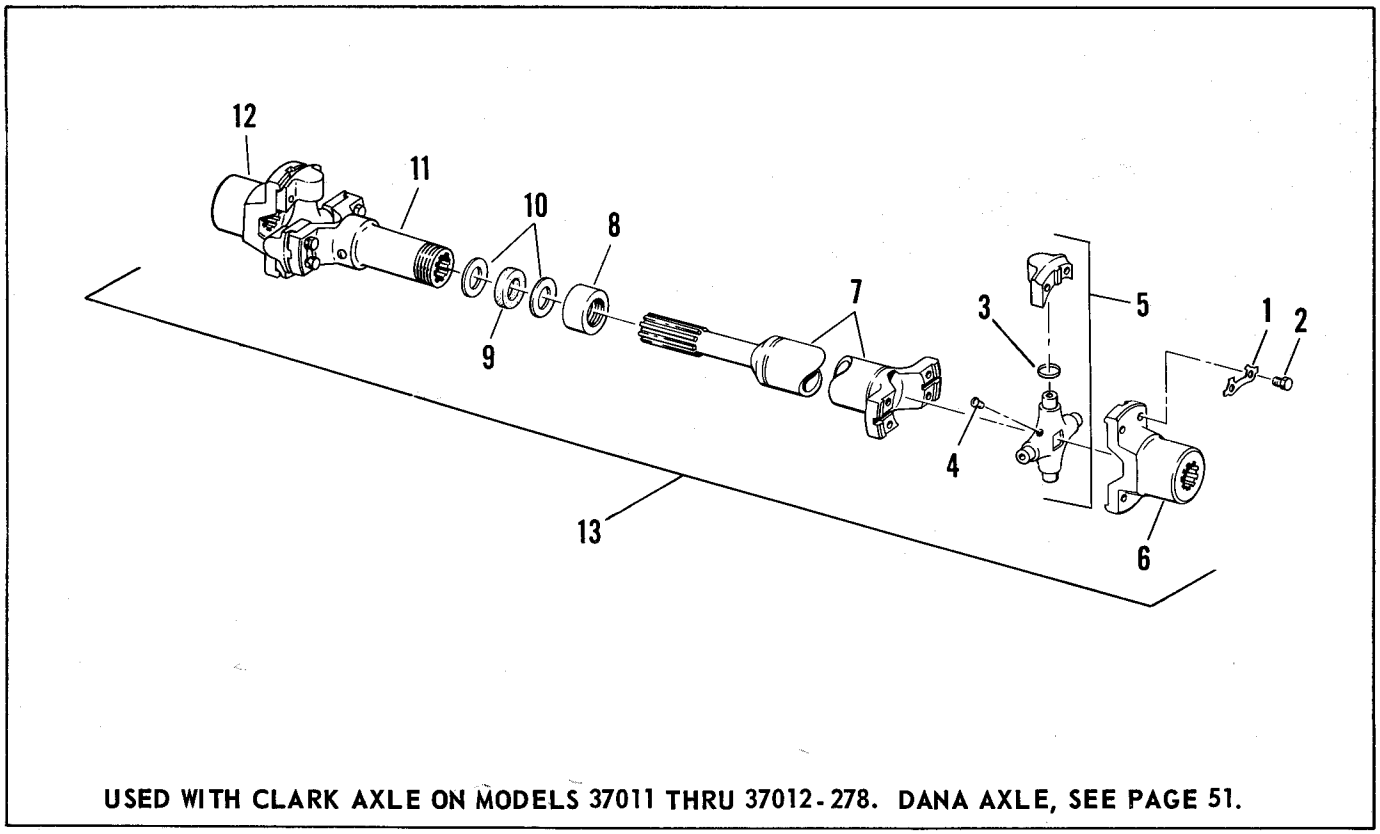

USED WITH CLARK AXLE ON MODELS 37011 THRU 37012-278. DANA AXLE, SEE PAGE 51.

Figure 25. Drive Shaft Assembly

Fig. & Ref. No.	Part No.	Description	No. Used
		DRIVE SHAFT ASSEMBLY	
25-1	2115-3	Lock Plate	8
-2	3210-4	Capscrew	16
-3	2115-39	Cork Washer	8
-4	302-5	Grease Fitting	2
-5	2115-36	Spider and Bearing Assembly includes items 3 and 4	2
25-6	2115-40	Rear Yoke	1
-7	2115-41	Tube Assembly	1
-8	2115-42	Retainer Cap	1
-9	2115-43	Dust Cap, Felt	1
-10	2115-44	Split Washer	2
-11	2115-45	Slip Yoke	1
-12	2115-46	Front Yoke	1
-13	3-3470	Drive Shaft Assembly, Complete	1

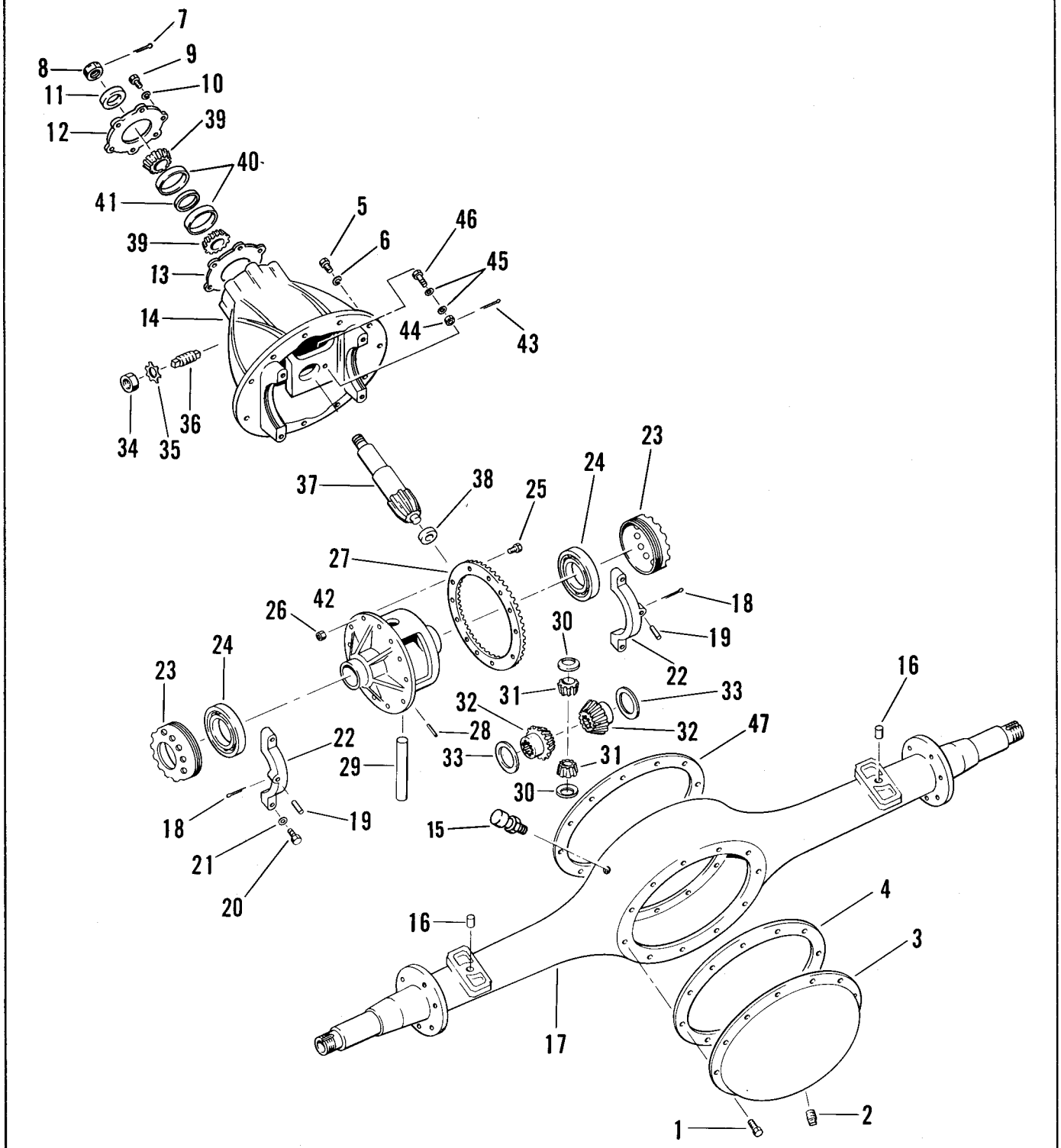

USED ON MODELS 37011 THRU 37012 - 278.

Figure 26. Rear Axle Assembly

For Series 5 Tractors using the Dana Rear Axle (starting serial no. 37012-279), see page 51.

Fig. & Ref. No.	Part No.	Description	No. Used
		REAR AXLE ASSEMBLY	
26-	214-210	Rear Axle Assembly, Complete Except items 7 and 16*.	
-1	214-52	Capscrew, Housing Cover	11
-2	281-5	Plug, Oil Drain	1
-3	214-49	Cover, Housing	1
-4	214-50	Gasket, Rear Cover	1
-5	324-5	Capscrew, Forward Diff. Housing	10 ea
-5	324-7	Capscrew	2 ea
-6	3253-6	Lockwasher	12
-7	3272-20	Cotter Pin, Pinion Nut Retaining	1
-8	214-60	Nut, Pinion Shaft	1
-9	324-5	Capscrew, Bearing Cap Retaining	6
-10	3253-6	Lockwasher	6
-11	214-223	Grease Seal	1
-12	214-211	Bearing Cover	1
-13	214-11	Gasket, Forward Housing	1
-14	214-221	Housing, Forward, and Cap Assembly	1
-15	302-14	Breather	1
-16	T-464	Dowel, Axle Housing Retainers	2
-17	214-214	Rear Axle Housing	1
-18	3272-14	Cotter Pin, Diff. Adjusting Nut Retainer	2
-19	214-215	Pin, Diff. Adjusting Nut Retainer	2
-20	214-212	Drilled Capscrew, Clamp Hanger Retainer	4
-21	214-213	Special Washer	4
26-22	+	Clamp Hanger	2
-23	214-64	Nut, Diff. Adjusting	2
-24	254-1	Bearing Cup	2
-24	254-77	Bearing Cone	2
-25	214-78	Bolt, Ring Gear Retaining	12
-26	214-226	Nut, Ring Gear Retaining	12
-27	‡	Ring Gear	1
-28	214-215	Pin, Side Gear Shaft Retaining	1
-29	214-74	Shaft, Diff. Side Gear	1
-30	214-73	Thrust Washer, Side Pinion Gear	2
-31	214-72	Side Pinion Gear	2
-32	214-70	Diff. Side Gear	2
-33	214-71	Thrust Washer, Diff. Side Gear	2
-34	214-224	Jam Nut, Thrust Screw Retaining	1
-35	214-216	Lockwasher, Thrust Screw Retaining	1
-36	214-217	Thrust Screw	1
-37	‡	Pinion Gear	1
-38	214-225	Inner Bearing, Pinion Gear	1
-39	254-64	Bearing Cone, Pinion Gear	2
-40	254-22	Bearing Cup, Pinion Gear	2
-41	214-218	Bearing Spacer	1
-42	214-69	Differential Case	1
-43	3272-1	Cotter Pin, Inner Pinion Bearing Retaining	1
-44	3221-1	Nut, Inner Pinion Bearing Retaining	1
-45	214-219	Washer, Retainer	2
-46	214-220	Capscrew, Pinion Bearing Retaining	1
-47	214-50	Gasket, Forward Cover	1

‡ Sold as 214-222 Ring Gear and Pinion Kit Only
+ Not Sold Separately, Order Part 214-221
*Also includes items 12, 14, and 15, fig. 27.

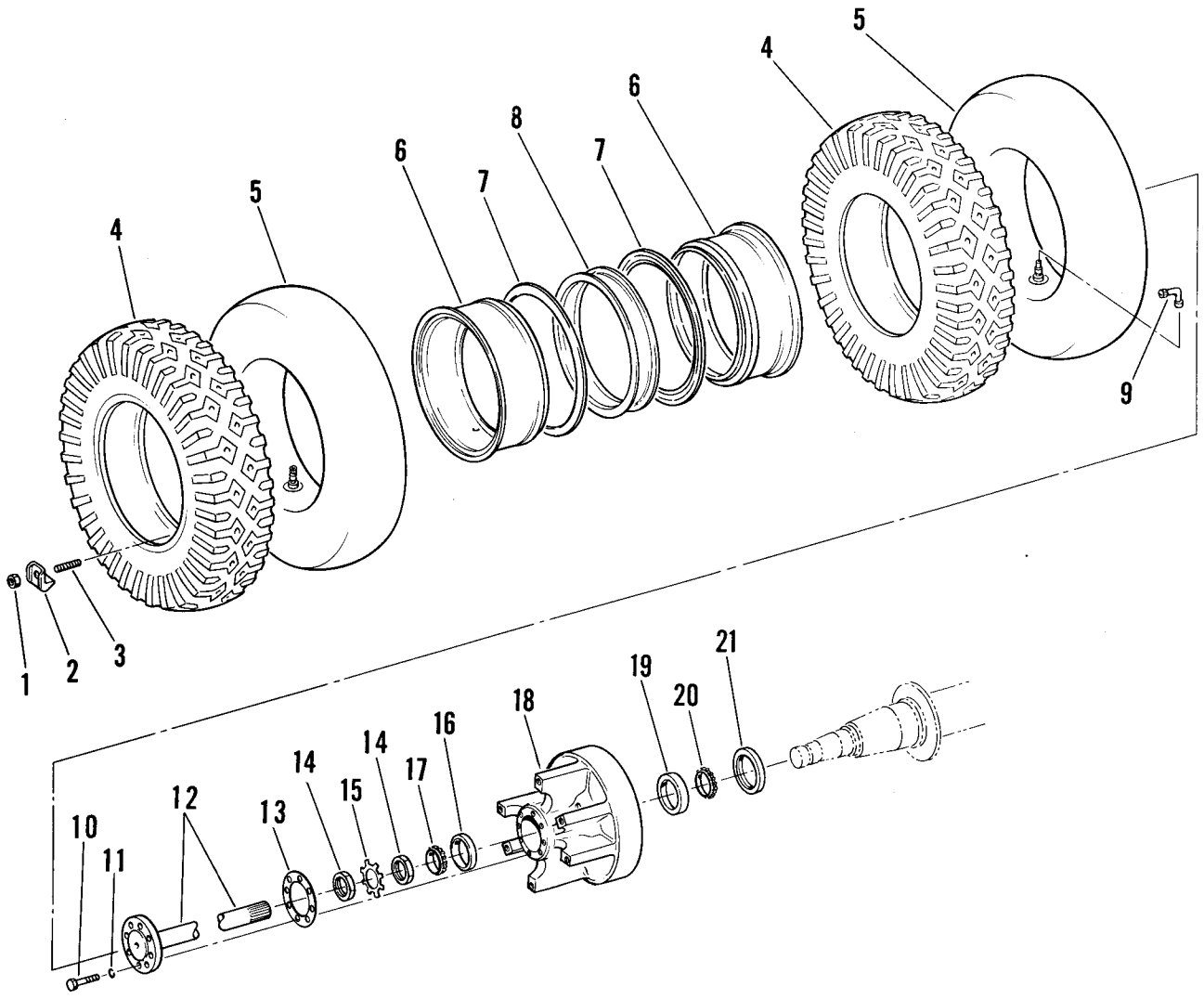

ON ITEMS 10 THRU 21, USE WITH CLARK AXLE ON MODELS 37011 THRU 37012 - 278.
FOR REAR WHEELS ON DANA AXLE, SEE PAGE 51.

Figure 27. Rear Wheels And Axle Shafts

Fig. & Ref. No.	Part No.	Description	No. Used
		REAR WHEELS AND AXLE SHAFTS	
27-1	217-30	Nut, Rim Retaining	12
-2	217-29	Wedge Clamp	12
-3	217-28	Stud	12
-4	231-5	Tire, Rear	4
-5	232-13	Inner Tube	4
-6	217-36	Rim	4
-7	217-37	Ring, Retaining	4
-8	217-31	Spacing Band	2
-9	217-16	Valve Extension	2

Fig. & Ref. No.	Part No.	Description	No. Used
27-10	324-9	Capscrew, Axle Retaining	16
-11	3253-6	Lockwasher	16
-12	214-40	Axle Shaft	2
-13	214-41	Gasket, Axle Shaft	2
-14	214-45	Nut, Bearing Retaining	4
-15	214-46	Lock	2
-16	254-1	Bearing Cup	2
-17	254-2	Bearing Cone	2
-18	3-2984	Rear Wheel	2
-19	254-3	Bearing Cup	2
-20	254-4	Bearing Cone	2
-21	253-91	Oil Seal	2

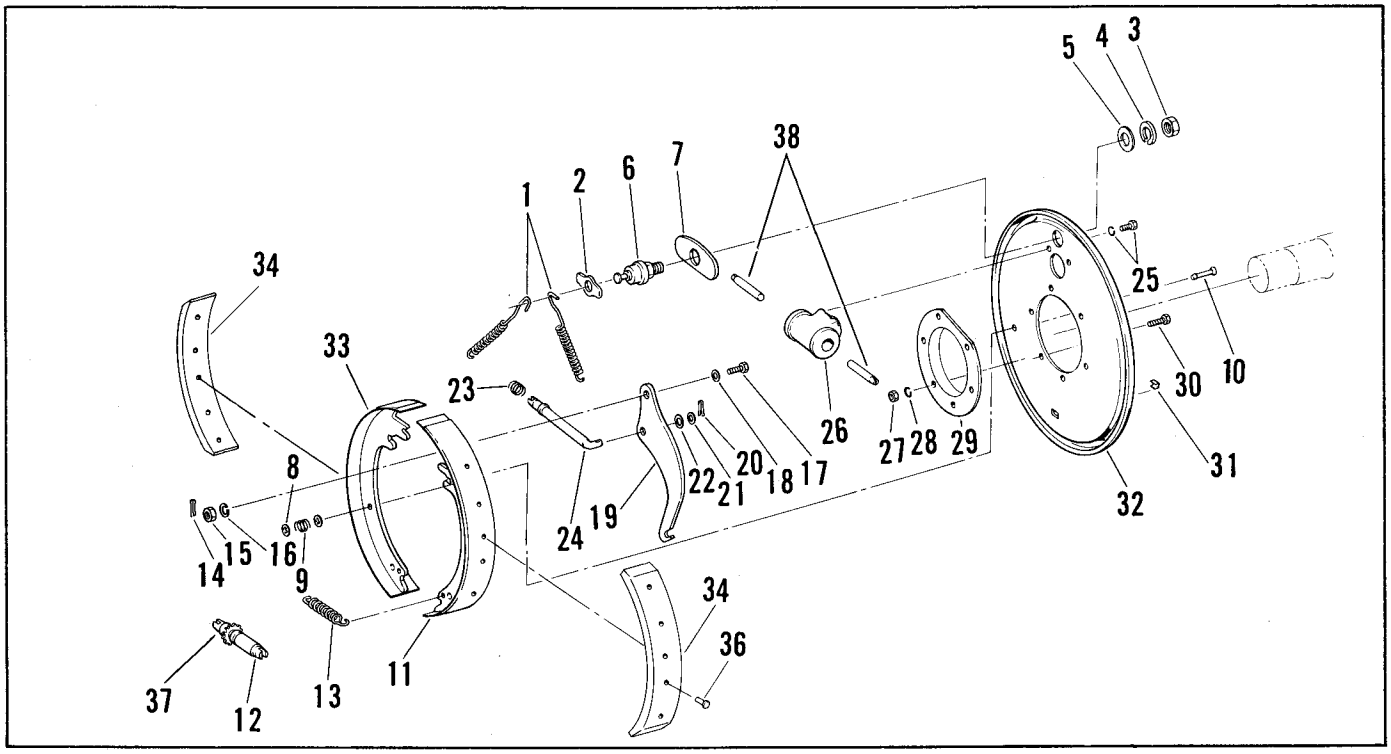

Figure 28. Hydraulic Brakes

Fig. & Ref. No.	Part No.	Description	No. Used
28-1	215-30	Spring, Brake Shoe Ret.	4
-2	215-43	Washer	2
-3	215-46	Nut	2
-4	215-47	Washer, Nut Retaining	2
-5	215-48	Flatwasher	2
-6	215-31	Anchor Pin	2
-7	215-32	Spacer	2
-8	215-44	Washer	8
-9	215-45	Spring	4
-10	215-58	Pin, Washer Retaining	4
-11	215-33	Rear Shoe Assembly (Lining 15"long)	2
-12	215-34	Brake Shoe Adjusting Screw	2
-13	215-35	Spring, Brake Shoe Ret.	2
-14	215-49	Pin, Cotter	2
-15	215-50	Nut, Lever Retaining	2
-16	215-51	Lockwasher	2
-17	215-52	Screw	2
-18	215-53	Washer	2
-19	215-36	Hand Brake Actuating Lever, Left Hand	1
-19	215-37	Hand Brake Actuating Lever, Right Hand	1
-20	215-54	Pin, Cotter	2
-21	215-55	Washer	2
-22	215-56	Washer	2
-23	215-38	Spring, Rod Positioning	2
-24	215-39	Rod, Brake Shoe Actuating	2
-25	215-57	Capscrew and Washer Assembly	4
-26	215-40	Hydraulic Wheel Cylinder, Left Hand	1

Fig. & Ref. No.	Part No.	Description	No. Used
28-26	215-41	Hydraulic Wheel Cylinder, Right Hand	1
-27	32127-15	Nut, Backplate Retaining Clark - Axle	12
*	32127-41	Nut, Backplate Retaining Dana - Axle	8
-28	3253-21	Washer, Lock - Clark - Axle	12
*	3253-7	Washer Lock - Dana - Axle	8
-29	3-2983	Spacer - Clark - Axle	2
-30	3211-25	Capscrew - Clark - Axle	12
*	3211-25	Capscrew - Dana - Axle	8
-31	215-42	Plug, Dust	2
-32	3-3853	Backplate, Left Hand - Clark - Axle	1
*	215-59	Backplate - L.H. - Dana - Axle	1
-32	3-3854	Backplate, Right Hand - Clark - Axle	1
*	215-60	Backplate - R.H. - Dana - Axle	1
-33	215-61	Front Shoe Assembly (Lining 12-1/4" Long)	2
-34	215-68	Lining Kit	2
-36	3295-2	Rivet	44
-37	215-65	Adjusting Socket	2
-38	215-66	Pin, Wheel Cylinder	4
		Brake, Complete except Items 27, 28, 29, and 30:	
	3-3073	Brake, Left Hand	1
	3-3074	Brake, Right Hand	1

* Not Illustrated

OPTIONAL EQUIPMENT CATALOG

Toro Series V Tractor

Title	Page
Gear Ratio Graph	35
Power Steering Kit (Includes P.S. Booster Assy.)	36
Power Steering Booster Assembly	38
Hydraulic Power Kit	40
Rear Power Take-Off Kit	42
Dump Box Kit	44
Governor Kit	46
Head and Tail Light Kit	50
Directional Signal Kit	48
Horn Kit	49
Floor Plate Extension Kit	47

SERIES 5 TRACTOR GEAR RATIO

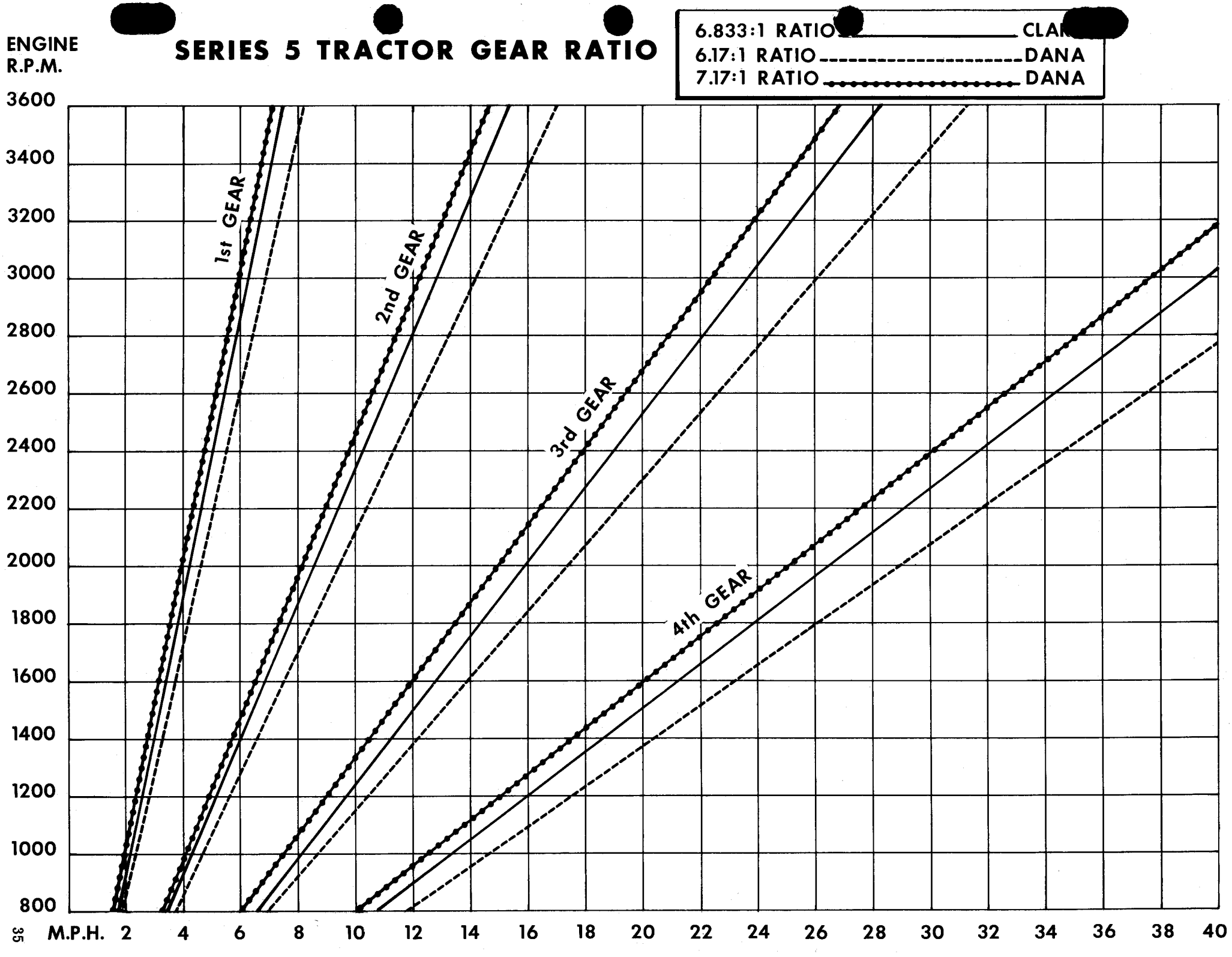

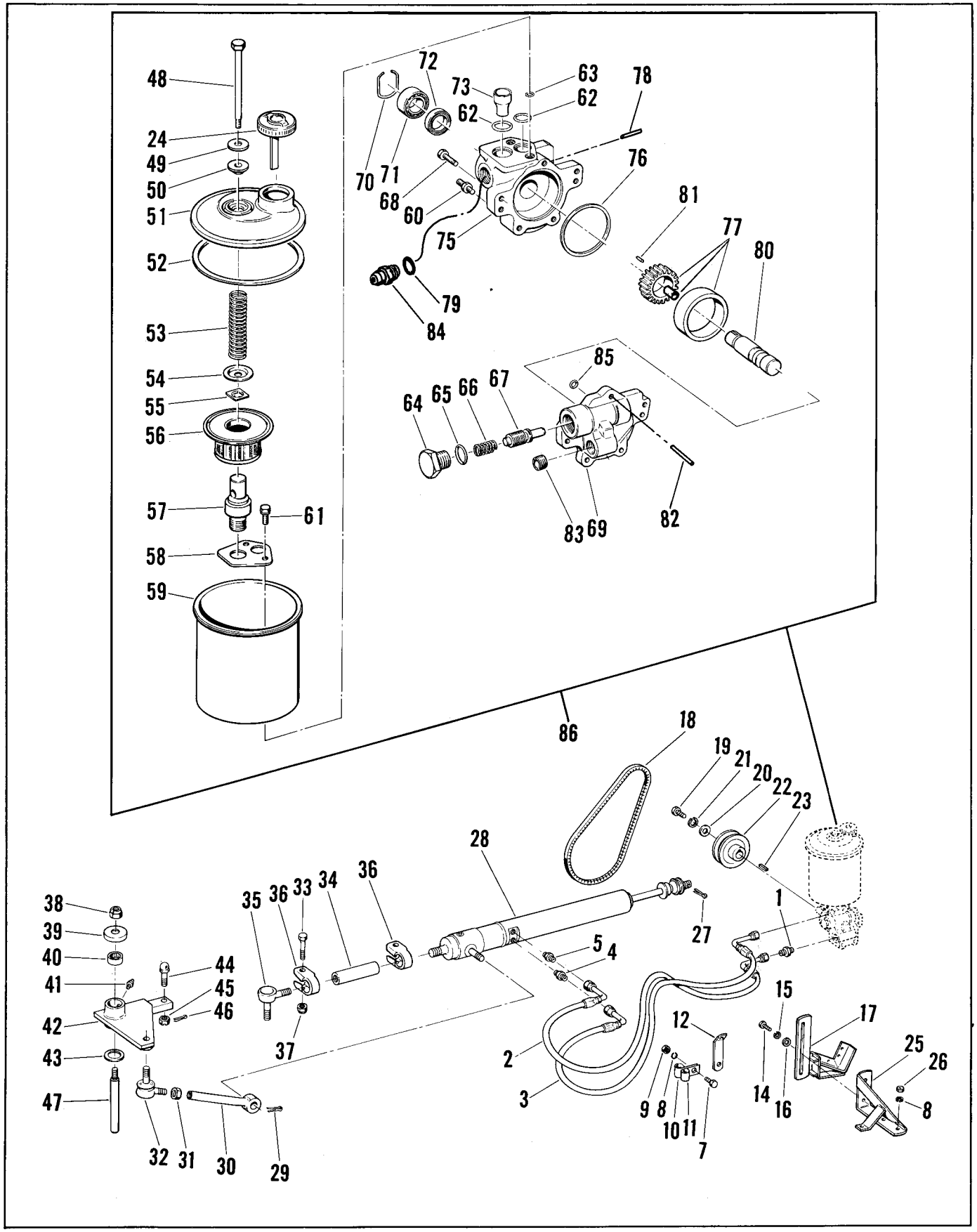

Figure 29. Power Steering Kit (Also Includes Parts Shown in Fig. 30).

POWER STEERING KIT - Model No. 77005 - Includes Booster Assembly, Fig. 30.

Fig. & Ref. No.	Part No.	Description	No. Used
29-1	304-65	Adapter Fitting	1
-2	3-3315	Pressure Hose Assembly	1
-3	3-3316	Return Hose Assembly	1
-4	353-192	Adapter Fitting, Large	1
-5	353-191	Adapter Fitting, Small	1
-7	3211-4	Capscrew	1
-8	3253-21	Lockwasher	7
-9	3219-3	Nut	7
-10	2412-4	Clip, Hose, Large	2
-11	304-62	Clip, Hose, Small	1
-12	304-60	Clip	1
-14	3211-3	Screw, Belt Adjusting	2
-15	3253-21	Lockwasher	2
-16	3256-24	Flatwasher	2
-17	3-4180	Adjusting Bracket	1
-18	271-86	"V" Belt	1
-19	322-16	Capscrew	1
-20	3256-3	Flatwasher	1
-21	3253-4	Lockwasher	1
-22	3-3314	Pulley	1
-23	3257-1	Key, Woodruff	1
-24	213-194	Cap, Filler	1
-25	3-4190	Support Bracket	1
-26	3219-3	Nut	3
-27	3272-11	Pin, Cotter	2
-28	213-103	Steering Booster (See Figure 30)	1
-29	3272-11	Pin, Cotter	1
-30	3-4210	Link, Control	1
-31	3220-7	Nut, Jam	1
-32	212-142	Tie Rod End, Right Hand	1
-33	3213-6	Capscrew	2
-34	3-3313	Adapter	1
-35	212-152	Tie Rod End, Left Hand	1
-36	2412-5	Clamp	2
-37	3296-19	Nut, Lock	2
-38	3296-14	Nut, Lock	1
-39	5P-18	Dust Shield	1
-40	252-52	Needle Bearing	2
-41	302-2	Grease Fitting	1
-42	3-4200	Bell Crank	1
-43	256-121	Washer, Thrust	1
-44	T-66	Ball Stud	1

*Not Illustrated

Fig. & Ref. No.	Part No.	Description	No. Used
29-45	32101-2	Nut, Slotted	1
-46	3272-7	Pin, Cotter	1
-47	3-3306	Pin, Spindle	1
-48	213-149	Screw, Hex Head	1
-49	213-150	Flatwasher	1
-50	213-152	Gasket, Cover Screw	1
-51	213-155	Cover, Reservoir	1
-52	213-159	Gasket, Cover	1
-53	213-161	Spring	1
-54	213-162	Cap, Filter	1
-55	213-164	Speed Nut	1
-56	213-165	Element, Filter	1
-57	213-166	Stud, Return	1
-58	213-167	Plate Reinforcement	1
-59	213-168	Body, Reservoir	1
-60	213-169	Stud, Mounting	3
-61	213-170	Bolt, Hex Head w/Lockwasher	2
-62	213-171	Gasket, Reservoir Intake and Return	2
-63	213-172	Gasket, Reservoir Mounting Screw	2
-64	213-173	Cap, Valve	1
-65	213-174	"O" Ring, Valve Cap	1
-66	213-175	Spring, Flow Control Valve	1
-67	213-176	Valve, Sub-Assembly, Complete	1
-68	213-177	Screw, Hex Head	2
-69	213-178	Cover, Bushing & Dowel	1
-70	213-179	Snap Ring	1
-71	213-180	Ball Bearing	1
-72	213-181	Seal, Oil	1
-73	213-182	Flow Director	1
-75	213-183	Housing, Pump and Bushing Assembly	1
-76	213-184	"O" Ring, Body to Cover	1
-77	213-185	Carrier, Roll, & Cam	1
-78	213-186	Impeller, Dowel Pin, Cam.	1
-79	213-187	Gasket, Return Adapter	1
-80	213-188	Shaft	1
-81	213-189	Drive Pin	1
-82	213-190	Dowel Pin	2
-83	213-191	Tube Seat	1
-84	213-192	Adapter, Return Hose	1
-85	213-193	"O" Ring, By-Pass	1
*		Reservoir Assy. Include items 48 thru 59.	
-86	213-104	Pump Assy.	1

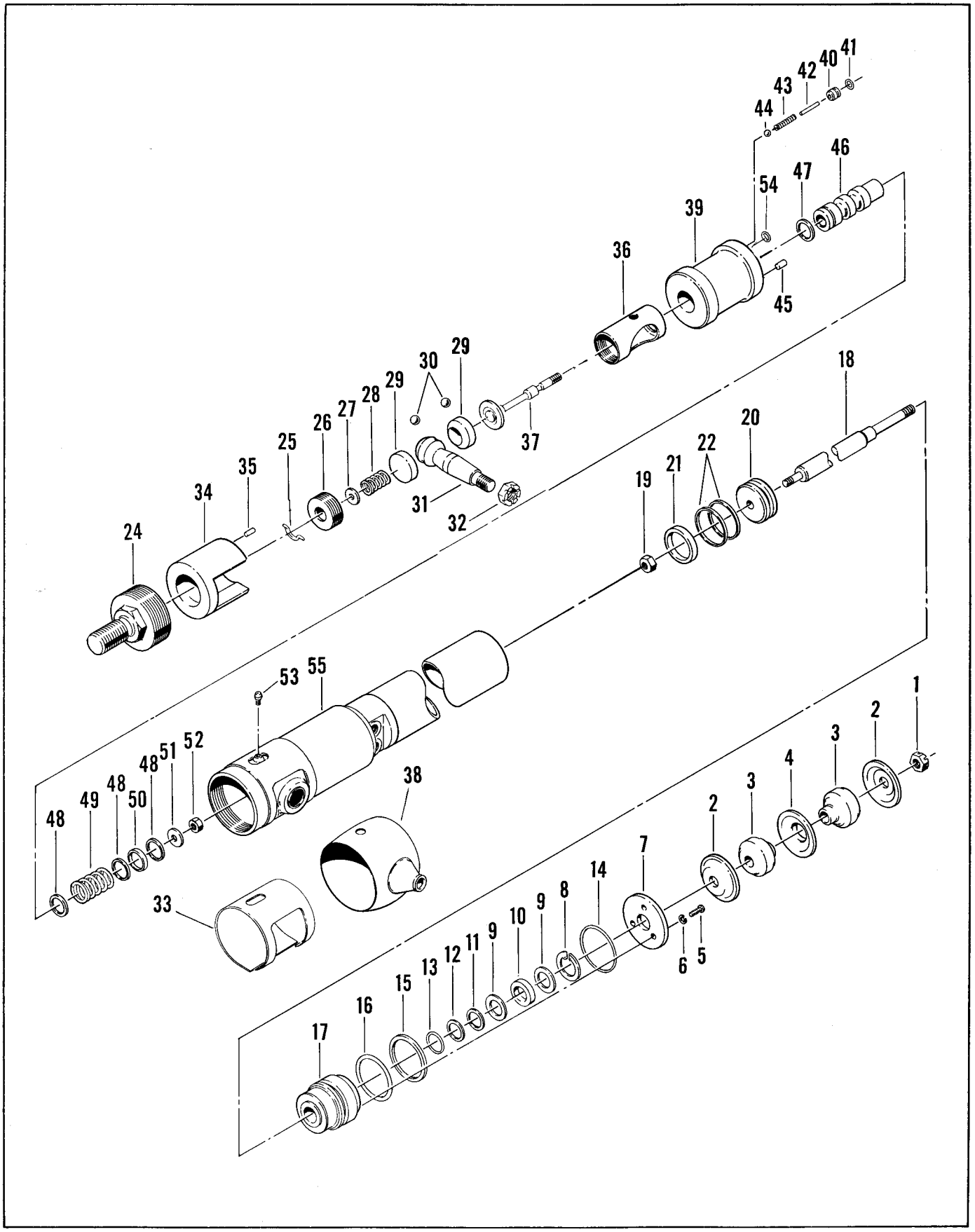

Figure 30. 213-103 Power Steering Booster Assembly

POWER STEERING BOOSTER ASSEMBLY

Fig. & Ref. No.	Part No.	Description	No. Used
	213-103	Complete Booster Assy.	1
30-1	32136-3	Nut, Slotted	1
-2	213-119	Plate, Retainer	2
-3	213-120	Bushing, Rubber	2
-4	213-121	Plate, Retainer	1
-5	3251-2	Screw, Slotted	3
-6	3253-17	Lockwasher	3
-7	213-124	Plate	1
-8	213-125	Ring, Retaining	1
-9	213-126	Washer, Steel Retaining	2
-10	213-127	Oil Seal	1
-11	213-128	Washer, Steel Spacing	1
-12	213-129	Ring, Leather Back-up	1
-13	213-130	"O" Ring	1
-14	213-131	Ring, Retaining	1
-15	213-132	Ring, Back-up	1
-16	213-133	"O" Ring	1
-17	213-134	Bearing Assembly (Incl. Items 8 thru 16)	1
-18	*	Rod	1
-19	3219-3	Nut	1
-20	213-137	Piston and Rod Assembly (Includes Items 18, 19, 20, 21 and 22)	1
-21	213-138	Seal	1
-22	213-139	Ring, Piston	2
-23	**	Sleeve, Inner	1
-24	213-141	Cap, End	1
-25	213-142	Lock Pin	1
-26	213-143	Adjusting Plug	1
-27	213-144	Washer	1
30-28	213-145	Spring	1
-29	213-146	Socket, Ball Stud	2
-30	213-147	Steel Ball	2
-31	213-148	Ball Stud (Includes 2 each Item 30)	1
-32	32136-2	Nut, Slotted	1
-33	213-140	Dust Seal Cover	1
-34	213-151	Cage, Ball Stud (Includes Item 35)	1
-35	32121-56	Pin, Roll	1
-36	213-153	Sleeve, Retaining	1
-37	213-154	Plunger Assembly	1
-38	213-147	Rubber Dust Seal	1
-39	‡213-156	Valve Assembly	1
-40	213-157	Plug Assembly (Includes Item 42)	1
-41	213-158	"O" Ring	1
-42	***	Pin	1
-43	213-160	Spring	1
-44	255-1	Ball, Check	1
-45	32121-56	Pin, Roll	1
-46	‡‡	Valve Spool	1
-47	213-118	"O" Ring	1
-48	213-122	Washer, Special	3
-49	213-123	Spring	1
-50	213-135	"O" Ring	1
-51	213-136	Washer, Special	1
-52	3296-20	Nut	1
-53	302-2	Grease Fitting	1
-54	213-115	"O" Ring	4
-55	**	Housing	1

*Sold only as part of Item 20, Piston and Rod Assembly.

**Sold only as part of 213-103, Complete Booster Assembly.

***Sold only as part of Item 40, Plug Assembly.

‡Includes Items 36, 37, 40, 41, 43, 44, 45, 46, 47, 48, 49, 50, 51, 52, and 56.

‡‡Sold only as part of Item 39, Valve Assembly.

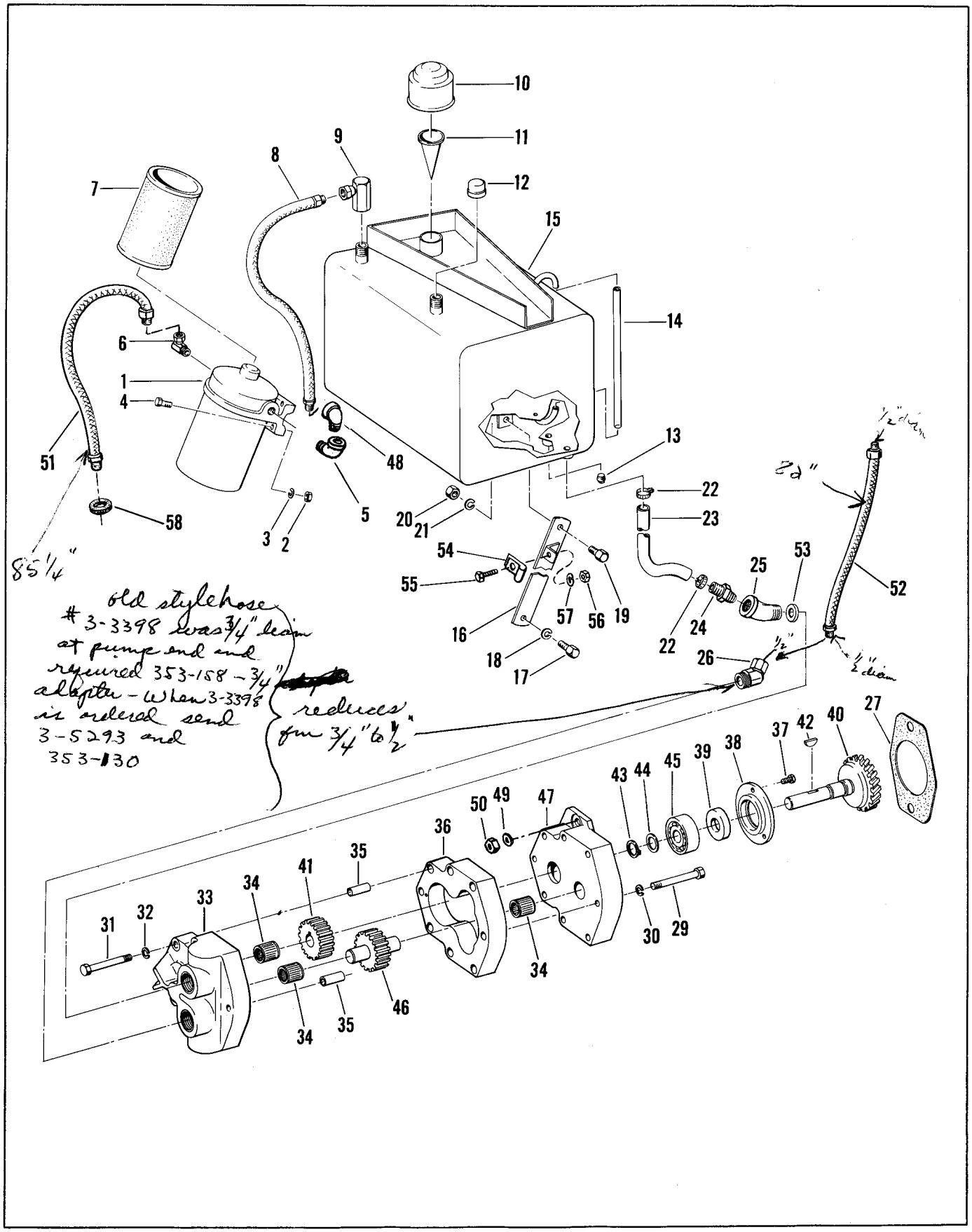

Figure 31. Hydraulic Power Kit

Fig. & Ref. No.	Part No.	Description	No. Used
31-1	353-155	Oil Filter, Includes item 7	1
-2	3219-3	Nut, Filter Retaining	4
-3	3253-21	Lockwasher, Filter Retaining	4
-4	3211-5	Capscrew	4
-5	2811-9	Street Elbow, Filter Outlet, 90°	1
-6	353-27	Adapter Union, Filter Inlet	1
-7	*PF-141	Filter Element, Replaceable	1
-8	3-3285	Hose, Filter to Reservoir	1
-9	353-159	Adapter Union, Filter to Reservoir	1
-10	353-119	Filler Cap, Reservoir	1
-11	3-2197	Filler Screen, Reservoir	1
-12	288-3	Inlet Cap	1
-13	285-12	Drain Plug	1
-14	3-3281	Sight Gage, Fluid Level	1
-15	3-4120	Hydraulic Reservoir	1
-16	3-4150	Brace, Reservoir to Flywheel	1
-17	323-6	Capscrew, Brace Retaining	1
-18	3253-21	Lockwasher, Brace Retaining	1
-19	3211-2	Capscrew, Brace Retaining	1
-20	3219-3	Nut, Brace Retaining	1
-21	3253-21	Lockwasher, Brace Retaining	1
-22	2412-3	Hose Clamp	2
-23	3-3284	Suction Hose, Reservoir to Pump	1
-24	3-7195	Coupling	1
-25	2811-6	Street Elbow, Pump Inlet	1

Fig. & Ref. No.	Part No.	Description	No. Used
31-26	353-130	Adapter Union, Pump Outlet	1
-26A*	353-193	Hydraulic Seal	1
-27	212-251	Gasket, Pump to Engine	1
+-28	353-157	Pump, Hydraulic, Complete, Standard	1
-29	353-163	Capscrew	6
-30	353-164	Lockwasher	6
-31	353-165	Capscrew	2
-32	353-166	Lockwasher	2
-33	353-167	Cover: Inc. 2 ea. Item 34.	1
-34	353-168	Bearing, Needle	3
-35	353-169	Pin, Dowel	2
-36	353-170	Plate, Gear	1
-37	353-171	Fastener, Sems	3
-38	353-172	Plate, Pilot. Inc. item 39	1
-39	353-173	Seal, Oil	1
-40	353-174	Shaft, Gear	1
-41	353-175	Gear, Drive	1
-42	353-176	Key, Woodruff	1
-43	353-177	Ring, Retaining	1
-44	353-178	Washer	1
-45	353-179	Bearing, Ball	1
-46	353-180	Gear Assembly, Idler	1
-47	353-181	Body, Inc. 1 ea. item 34	1
-48	2811-2	Street Elbow, 45°	1
-49	T-99	Copper Washer	2
-50	32146-2	Lock Nut	2
-51	3-3397 (55½")	Hose, Rtn Lo Pressure	1
-52	3-5293 (82")	Hose, for pump & valve #7	1
-53	353-193	Sealing Washer	1
-54	304-60	Clamp	1
-55	322-5	Capscrew	1
-56	3217-6	Nut	1
-57	3253-4	Lockwasher	1
-58	237-41	Grommet	1

* Not Illustrated

NOTES

+ Items 29 thru 47 above are for the standard hydraulic pump (2HCS) as indicated on the identification plate fastened to the side of the pump body.

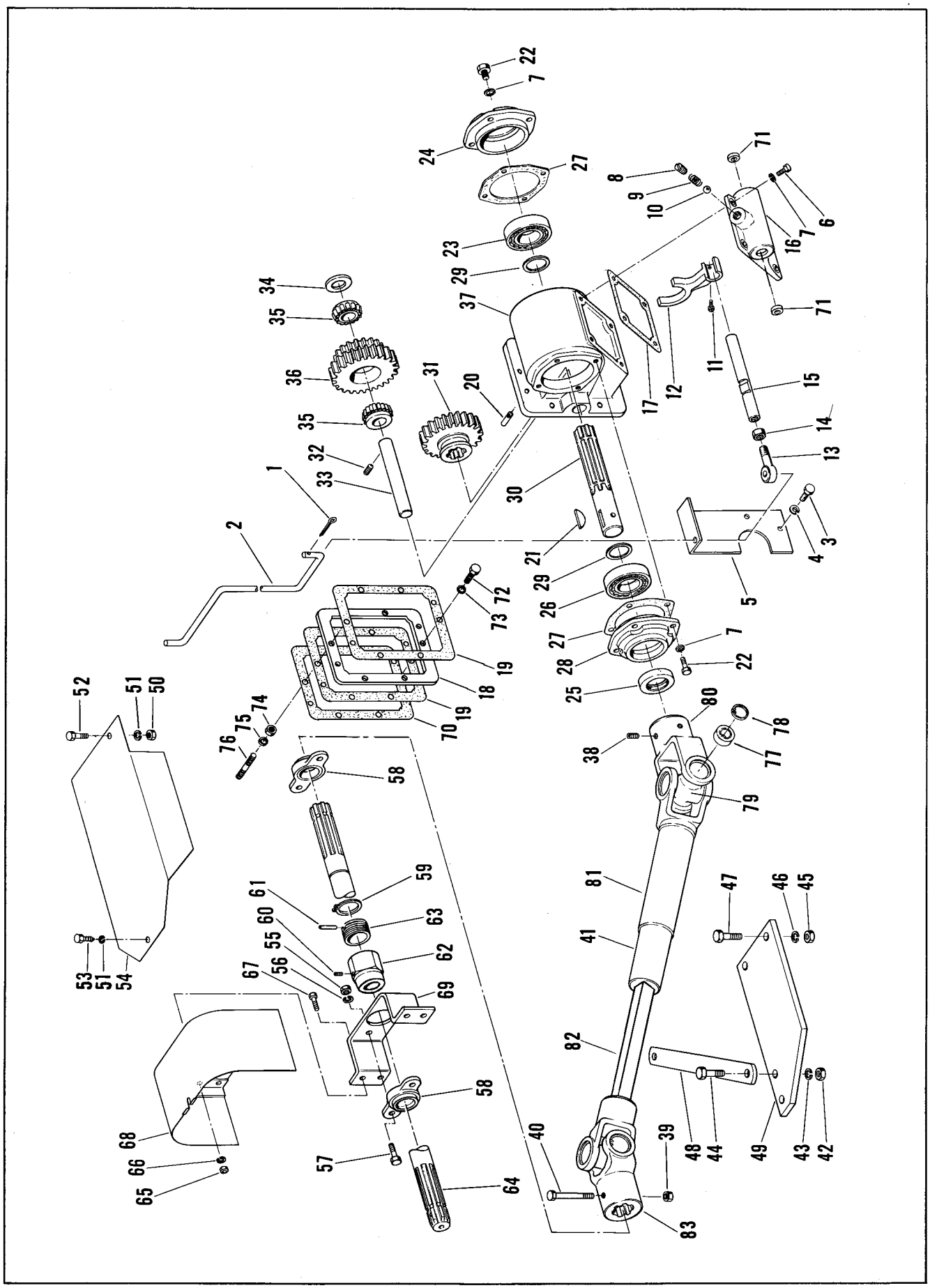

Figure 32. Rear Power Take-Off Kit

REAR POWER TAKE-OFF KIT - Model No. 77002

Fig. & Ref. No.	Part No.	Description	No. Used
32-1	3272-21	Pin, Cotter	1
-2	3-3324	Rod, Shift	1
-3	323-5	Capscrew	2
-4	3253-21	Washer, Lock	2
-5	3-3325	Plate, Pivot	1
	2110-22	Power Take-Off Assembly (Includes Items 6 thru 37, and 70 thru 76)	1
-6	322-2	Capscrew	4
-7	3253-4	Washer, Lock	12
-8	2110-25	Plug	1
-9	2110-24	Spring	1
-10	2110-43	Ball	1
-11	2110-44	Capscrew	1
-12	2110-28	Fork, Shifter	1
-13	2110-23	Bolt, Eye	1
-14	2110-45	Nut, Jam	1
-15	2110-26	Shifter Rod	1
-16	2110-27	Cover	1
-17	2110-29	Gasket, Shifter Cover	1
-18	2110-42	Spacer Assembly, (Includes 2 Ref. 20)	1
-19	2110-39	Gasket, .020 thick	2
-20	2110-46	Pin, Dowel	2
-21	2110-47	Key, Woodruff	1
-22	322-5	Capscrew	8
-23	2110-53	Bearing, Tapered Roller, Complete	1
-24	2110-31	Cap, Bearing	1
-25	2110-48	Seal, Oil	1
-26	2110-54	Bearing, Tapered Roller, Complete	1
-27	2110-33	Gasket	*AR
-28	2110-37	Cap, Bearing	1
-29	2110-49	Ring, Retaining	2
-30	2110-36	Shaft, Drive	1
-31	2110-35	Gear, Sliding	1
-32	2110-50	Setscrew	1
-33	2110-32	Shaft, Idler	1
-34	2110-34	Spacer, Idler Gear	*AR
-35	2110-51	Bearing	2
-36	2110-38	Gear, Idler	1
-37	2110-30	Housing	1
-38	3246-4	Setscrew	2
-39	3296-4	Locknut, Hex	1
-40	3210-13	Capscrew	1

Fig. & Ref. No.	Part No.	Description	No. Used
32-41	3-3334	Shaft, U Joint, Complete Assembly	1
-42	3217-11	Nut, Hex	1
-43	3253-8	Washer, Lock	1
-44	327-7	Capscrew	1
-45	3217-12	Nut, Hex	3
-46	3253-9	Washer, Lock	3
-47	328-2	Capscrew	3
-48	3-3333	Brace	1
-49	3-3323	Drawbar Hitch, Extended	1
-50	3219-3	Nut, Hex	1
-51	3253-21	Washer, Lock	2
-52	3211-3	Capscrew	1
-53	32104-6	Screw, Self-Tapping	1
-54	3-3328	Shield, Front Safety	1
-55	3219-5	Nut, Hex	4
-56	3253-7	Washer, Lock	4
-57	3213-3	Capscrew	4
-58	251-157	Bearing Assembly	2
-59	32120-84	Ring, Retaining	2
-60	3245-7	Setscrew	2
-61	32121-34	Pin, Roll	1
-62	3-3327	Nut, Adjustment	1
-63	3-3335	Sleeve, Adjustment	1
-64	3-3331	Shaft, Rear	1
-65	3219-3	Nut, Hex	4
-66	3253-21	Washer, Lock	4
-67	3211-6	Capscrew	4
-68	3-4230	Shield, Rear Safety	1
-69	3-3326	Bracket, Rear Bearing	1
-70	2110-40	Gasket, .010 thick	1
-71	2110-52	Oil Seal	2
-72	T-98	Capscrew	3
-73	T-99	Copper Washer	3
-74	3296-5	Nut	3
-75	3253-21	Lockwasher	3
-76	2110-41	Stud	3
-77	WCK-1418	Needle Cup Assembly	8
-78	WC-1417	Snap Ring	8
-79	WCK-1416	Center Cross	2
-80	2115-48	Front Yoke	1
-81	2115-49	Tubular Shaft	1
-82	2115-50	Square Shaft	1
-83	2115-51	Rear Yoke	1
+	218-237	Tachometer	1
+	218-238	Bracket, Tachometer	1
+	3-4118	Wire, Tachometer	1

* As required
\+ Not Illustrated

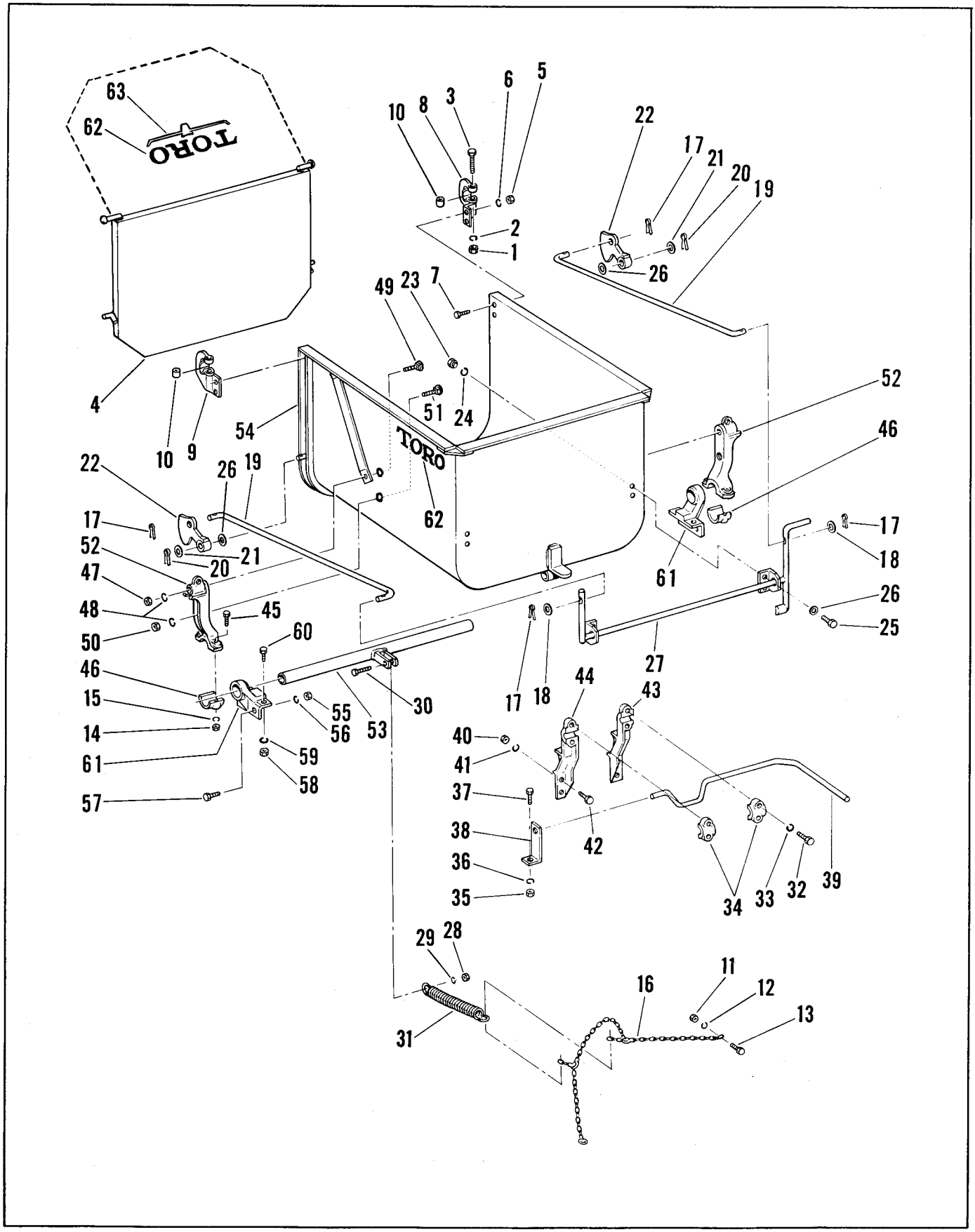

Figure 33. Dump Box Kit

DUMP BOX KIT - Model No. 77003

Fig. & Ref. No.	Part No.	Description	No. Used
33-1	3219-2	Nut, Endgate Hanger	2
-2	3253-4	Lockwasher, Endgate Hanger	2
-3	3210-11	Capscrew, Endgate Hanger	2
-4	JT-122	Endgate	1
-5	3219-2	Nut, Endgate Hanger to Body	4
-6	3253-4	Lockwasher, Endgate Hanger to Body	4
-7	3210-5	Capscrew, Endgate Hanger to Body	4
-8	W-105L	Endgate Hanger, Left	1
-9	W-105R	Endgate Hanger, Right	1
-10	W-121	Spacer, Endgate Hanger Bracket	2
-11	3219-5	Nut, Snubber Chain to Tractor	2
-12	3253-7	Lockwasher, Snubber Chain to Tractor	2
-13	3213-3	Capscrew, Snubber Chain to Tractor	2
-14	3219-6	Nut, Bracket Cap	4
-15	3253-8	Lockwasher, Bracket Cap	4
-16	JT-25	Snubber Assembly, Dump Box	1
-17	3272-16	Cotter Pin, Endgate Latch Rod	4
-18	3256-5	Washer, Endgate Latch Rod	2
-19	JT-125	Rod, Endgate Latch	2
-20	3272-21	Cotter Pin, Endgate Latch Hook	2
-21	PM328	Washer, Endgate Latch Hook	2
-22	JT-28	Hook, Endgate Latch	2
-23	3219-2	Nut, Latch Lever to Body	4
-24	3253-4	Lockwasher	4
-25	3210-4	Capscrew, Latch Lever to Body	4
-26	LU-93	Washer	4
-27	JT-126	Lever, Endgate Latch	1
-28	3219-5	Nut	1
-29	3253-7	Lockwasher	1
-30	3213-4	Capscrew	1
-31	JT-146A	Spring, Dump Body	1
-32	325-7	Capscrew, Lock Lever Support	4
33-33	3253-7	Lockwasher, Lock Lever Support	4
-34	JT-34	Cap, Lock Lever Support	2
-35	3219-5	Nut, End Support to Frame	1
-36	3253-7	Lockwasher, End Support to Frame	1
-37	3213-2	Capscrew, End Support to Frame	1
-38	JT-142	Support, Lock Lever End	1
-39	JT-116	Lock Lever	1
-40	3219-5	Nut, Support to Frame	4
-41	3253-7	Lockwasher, Support to Frame	4
-42	3213-3	Capscrew, Support to Frame	4
-43	JT-33L	Support, Lock Lever and Body, Left	1
-44	JT-33R	Support, Lock Lever and Body, Right	1
-45	3214-9	Capscrew, Bracket Cap	4
-46	JT-24	Cap, Body Hanger Bracket	2
-47	3217-9	Nut, Body to Bracket	2
-48	3253-7	Lockwasher, Body to Bracket	4
-49	3233-7	Carriage Bolt, Body to Bracket	2
-50	3217-9	Nut, Body to Bracket	2
-51	3233-4	Carriage Bolt, Body to Bracket	2
-52	JT-8A	Bracket, Body Hanger	2
-53	JT-69A	Pipe, Body Support	1
-54	JT-121A	Dump Box Assembly	1
-55	3219-5	Nut, Bearing Bracket to Frame	4
-56	3253-7	Lockwasher, Bearing Bracket to Frame	4
-57	3213-2	Capscrew, Bearing Bracket to Frame	4
-58	3219-5	Nut, Bearing Bracket to Frame	4
-59	3253-7	Lockwasher, Bearing Bracket to Frame	4
-60	3213-2	Capscrew, Bearing Bracket to Frame	4
-61	JT-7	Bracket, Support Pipe Bearing	2
-62	3-0704	Decal	3
-63	3-0703	Decal	1

WARNING

When the dump body is installed on a Toro Series V Tractor which is equipped with the rear power take-off, the snubber chain assembly MUST be shortened TWO links to prevent the bottom of the dump body from striking the power take-off stub shaft when the body is dumped. Insert the anchor bolts in the THIRD link from the end of the chain.

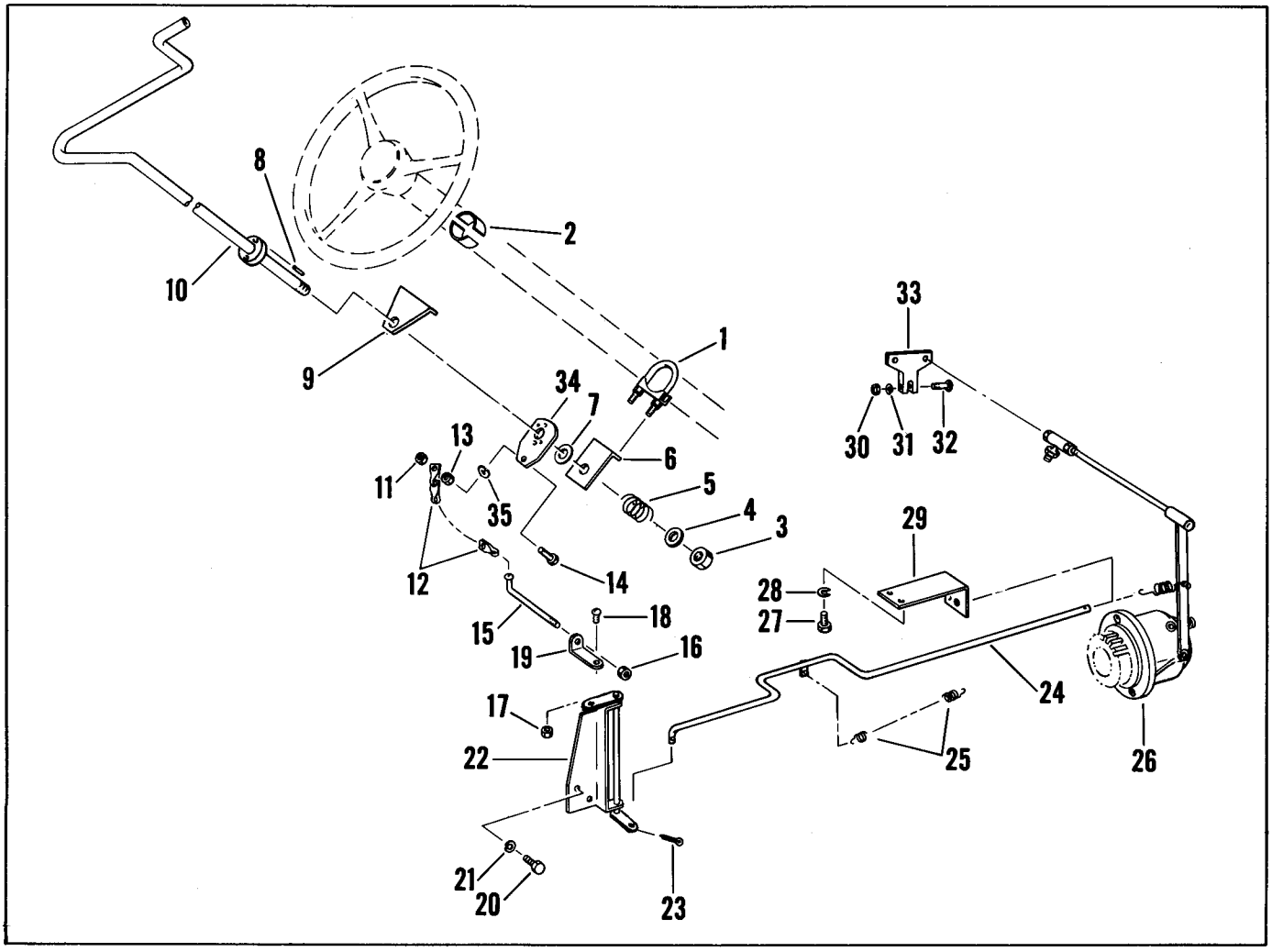

Figure 34. Governor Kit

GOVERNOR KIT - Model No. 77007

Fig. & Ref. No.	Part No.	Description	No. Used
34-1	2112-6	Clamp, Muffler	2
-2	3-2844	Saddle	4
-3	3296-7	Nut, Lever Retaining	1
-4	3256-25	Washer	1
-5	WC-1467	Spring, Compression	1
-6	3-2856	Bracket, Friction Disc	1
-7	3-2858	Disc, Friction	1
-8	32121-2	Roll Pin	2
-9	3-2845	Bracket, Upper	1
-10	3-4340	Lever, Hand Throttle	1
-11	3296-3	Nut, Link Retaining	2
-12	3-3363	Chain	1
-13	3220-1	Jam Nut	2
-14	32113-21	Machine Screw	2
-15	3-3366	Screw, Adjusting	1
-16	3296-2	Nut	1
-17	3296-12	Nut	2
-18	3252-2	Screw	2
-19	3-3365	Link, Governor Chain	1

Fig. & Ref. No.	Part No.	Description	No. Used
34-20	323-4	Capscrew, Bell Crank Retaining	2
-21	3253-21	Lockwasher	2
-22	3-4310	Bell Crank	1
-23	3272-6	Pin, Cotter	1
-24	3-4330	Rod, Governor Control	1
-25	F-314	Spring, Return	1
-26	212-252	Governor and Adapter	1
-27	3211-1	Capscrew, Guide Retaining	2
-28	3253-21	Lockwasher	2
-29	3-3364	Guide, Governor Rod	1
-30	3217-26	Nut, Throttle Lever Retaining	1
-31	3253-2	Lockwasher	1
-32	3252-4	Capscrew	1
-33	3-4300	Lever, Throttle	1
-34	3-2857	Plate, Friction	1
-35	3253-3	Lockwasher	1

INSTRUCTIONS FOR ADJUSTING THE GOVERNOR AT THE TIME OF INSTALLATION

With engine not running:

1. Assemble the governor and hand throttle control linkage to the tractor. Remove standard throttle lever from carburetor and install special throttle lever (item #15), leaving it loose on the throttle shaft for the time being. Remove standard foot feed link, 3-3815, and replace with chain (Item 26) and attaching parts as shown, remove the link which operates the accelerator pump from carburetor and discard. Spring F314, removed from foot feed linkage, should be installed as shown.

2. Adjust the length of the governor control rod by turning the end ball sockets in or out so carburetor lever (Item 15) will not go over center or even close to it as governor arm is moved back and forth through its full travel. Tighten jam nuts on the governor control rod, making sure the ball sockets have free motion when the jam nuts are tight. It is now the correct length, and its length should not be changed again to make any adjustment.

3. Adjust the length of the foot feed chain by turning nut (Item 29) in or out. Push the governor arm as far as it will go in the "fast" direction and, while holding it there, adjust the foot feed chain so it is just snug when the foot feed pedal touches the toe board.

4. Still holding the governor arm in its full "fast" position, rotate the carburetor throttle shaft till it strikes the wide open throttle stop. Back it off 1/32" and tighten clamp screw. (Item 18)

5. Back off the bumper adjusting screw so it does not contact anything inside the governor case when the governor arm is full forward (idle position).

6. Move the hand throttle lever (Item 2) to "idle" position (all the way up). Adjust nut (Item 29) so cross chain (Item 26 in View B-B) is not slack but is just barely snug.

Slow Idle Adjustment, Engine Running:

7. Move the hand throttle lever, (Item 2) to "idle" position (all the way up).

8. Adjust the idle stop screw on the carburetor to the desired slow idle speed (approximately 500 rpm).

9. Turn in the bumper adjusting screw, to give an additional 20 rpm, and tighten its jam nut.

Fast Idle, Engine Running:

10. Move the hand throttle lever, (Item 2) to "fast" position, (all the way down). Engine should run at approximately 2200 rpm when under no load, and 1900 rpm under full load, ± 100 rpm. There is no adjustment provided for this.

11. There should be enough friction in the friction disc, (Item 10) so the hand throttle lever, (Item 2) will hold any setting, including fast idle, as in step 10 above, without creeping. If it will not hold, tighten the nut, (Item 13) until it will hold. Do not tighten more than necessary, though, as this makes the control harder to operate than is desirable.

FLOOR PLATE EXTENSION KIT - Model No. 77004

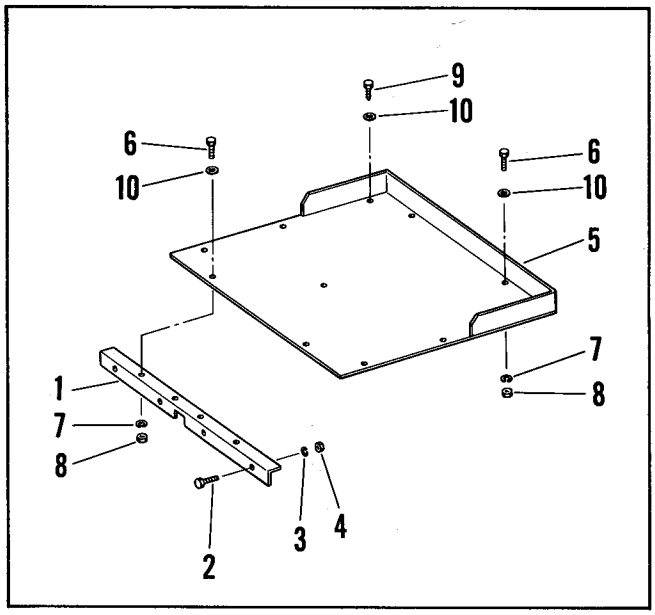

Figure 38. Floor Plate Extension Kit

Fig. & Ref. No.	Part No.	Description	No. Used
38-1	3-3223	Support Angle	1
-2	3211-4	Capscrew	4
-3	3253-21	Lockwasher	4
-4	3219-3	Nut	4
-5	3-4350	Floor Plate	1
38-6	3211-3	Capscrew	4
-7	3253-21	Lockwasher	4
-8	3219-3	Nut	4
-9	32104-6	Capscrew, Self-tapping	7
-10	3256-24	Flatwasher	11

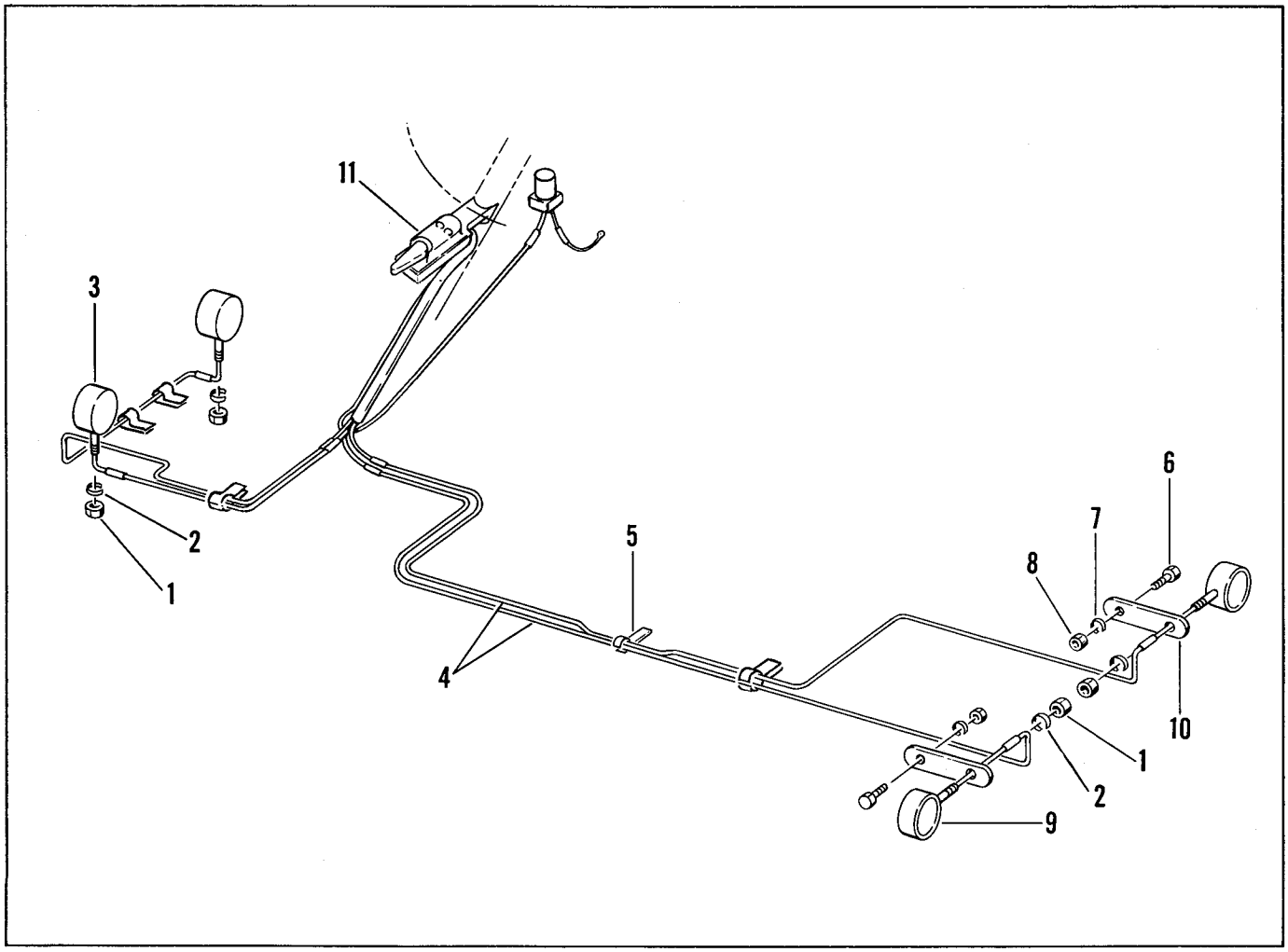

Figure 36. Directional Signal Kit

DIRECTIONAL SIGNAL KIT MODEL NO. 77009

Fig. & Ref. No.	Part No.	Description	No. Used
36-1	3219-5	Nut	4
-2	3253-7	Lockwasher	4
-3	218-215	Directional Light, Amber	2
-4	3-3443	Wire, 30 Ft. Roll	1
-5	212-93	Clip-Casing	5
-6	3214-3	Capscrew	2

Fig. & Ref. No.	Part No.	Description	No. Used
36-7	3253-8	Lockwasher	2
-8	3219-6	Nut	2
-9	218-216	Directional Light, Red	2
-10	3-3402	Bracket	2
-11	218-217	Signal Controller w/ Flasher and Fuse	1

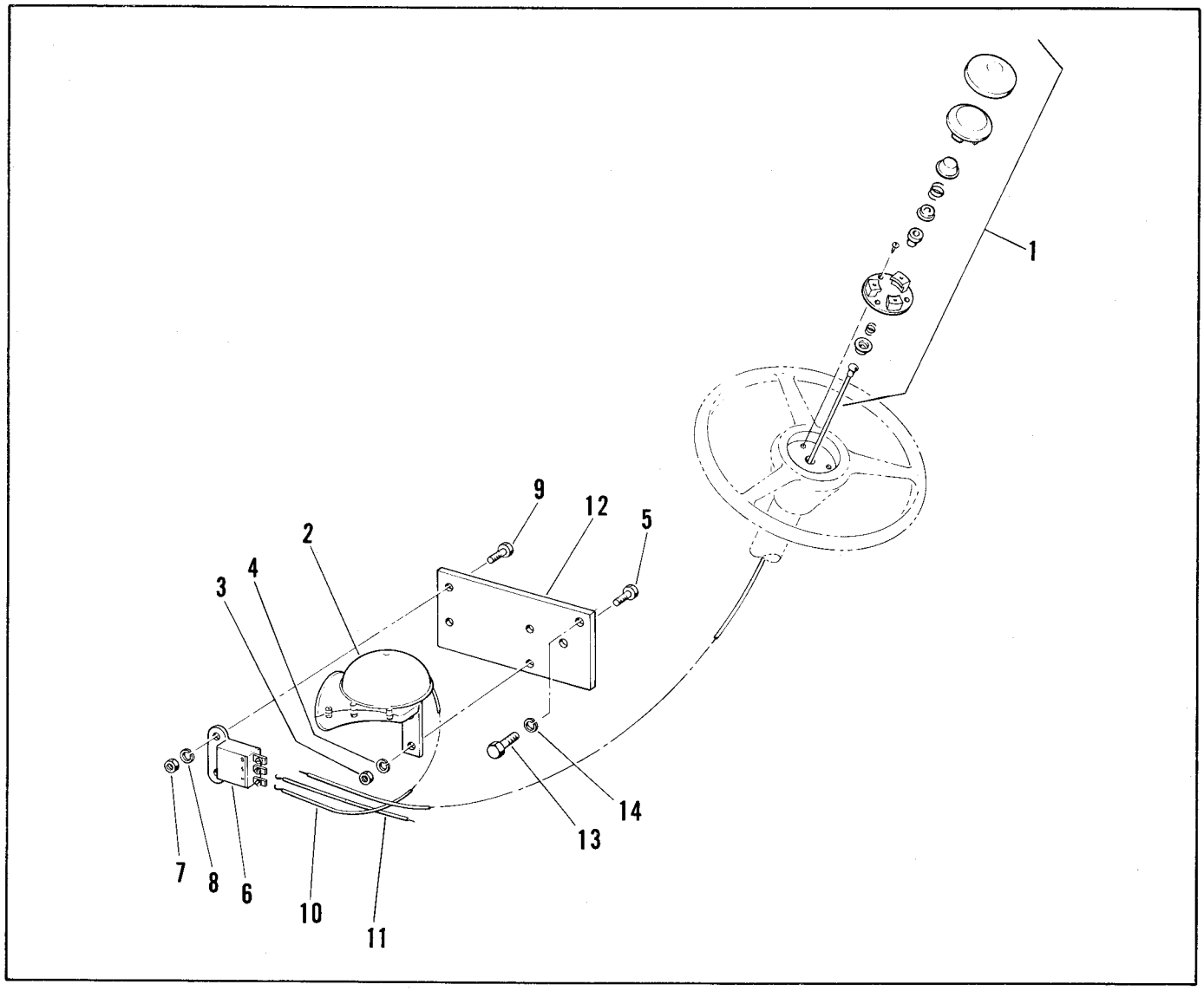

Figure 37. Horn Kit

HORN KIT MODEL NO. 77006

Fig. & Ref. No.	Part No.	Description	No. Used
37-1	3-4400	Horn Button Assembly w/Wire	1
-2	218-210	Horn Assembly	1
-3	3219-1	Nut, Horn Retaining	2
-4	3253-3	Lockwasher	2
-5	329-4	Capscrew	2
-6	218-212	Relay	1
-7	3219-1	Nut, Relay Retaining	2
-8	3253-3	Lockwasher	2
37-9	329-4	Capscrew	2
-10	3-1836	Wire, Relay To Horn	1
-11	3-3394	Wire, Relay To Starter Solenoid	1
-12	3-3395	Bracket, Mounting	1
-13	323-5	Capscrew, Bracket To Engine	2
-14	3253-21	Lockwasher	2

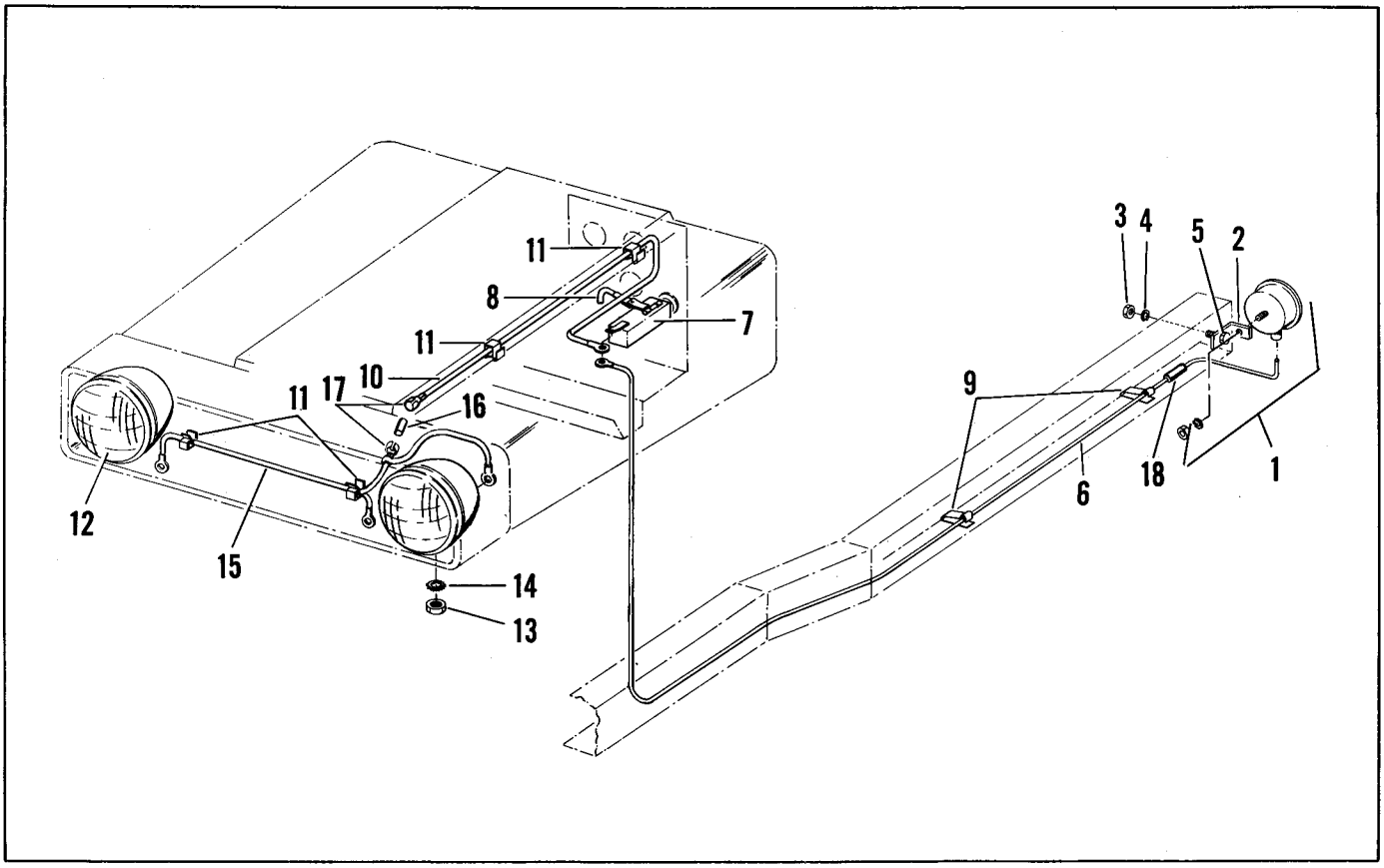

Figure 35. Head and Tail Light Kit

HEAD & TAIL LIGHT KIT - Model No. 77008

Fig. & Ref. No.	Part No.	Description	No. Used
35-1	219-5	Tail Light Assembly	1
-2	3-3401	Tail Light Bracket	1
-3	3219-6	Nut, Tail Light Retaining	1
-4	3253-8	Lockwasher, Tail Light Retaining	1
-5	3214-2	Capscrew, Tail Light Retaining	1
-6	3-3456	Wire, Tail Light	1
-7	218-213	Light Switch W/Fuse	1
-8	3-3455	Wire, Ignition Switch to Light Switch	1
-9	212-93	Clip, Tail Light Wire Retaining	2
-10	3-3453	Wire, Head Light	1

Fig. & Ref. No.	Part No.	Description	No. Used
35-11	218-214	Clip, Head Light Wire Retaining	4
-12	3-9010	Head Light Assembly	2
-13	3217-9	Nut, Head Light Retaining	2
-14	3290-207	Lockwasher, Head Light Retaining	2
-15	3-3454	Wire, Head Light Jumper	1
	*219-6	Sealed Beam Replacement for Headlight	
-16	218-248	Line Splice Connector	1
-17	218-249	Female Receptacle	2
-18	218-250	Butt Connector	1

*Not Illustrated