Form No. 3370-746 Rev A

TORO®

Count on it.

Parts Catalog

Grammer Seat w/Air Ride Suspension Kit

Model No. 30511

Ordering Replacement Parts

To order replacement parts, please supply the part number, the quantity, and the description of each part desired.

Understanding Reference Numbers

Each identified part in an illustration has a reference number. The reference number for a part also appears in the parts list, along with other information about the part.

This catalog uses two special reference number formats, one to indicate parts in a service assembly and another to indicate the quantity of a given part in an illustration.

Service Assembly Reference Numbers

Parts in service assemblies have reference numbers in the form a:b. The a represents the reference number of the entire service assembly and the b represents a sequential number unique to each part within the service assembly.

For example, a wheel assembly might be identified by reference number 6, the tire by 6:1, the valve by 6:2, and the wheel by 6:3. When you order the assembly identified by reference number 6, you receive all parts identified by reference numbers 6:1,6:2, and 6:3. However, you may also order any part individually. Reference numbers of this type appear in illustration and in parts lists.

Reference Numbers Indicating Quantity

In an illustration, if a reference number indicates more than one part, the reference number has the form nX y. The n represents the quantity of the part, the X is the multiplication symbol, and the y represents the reference number.

For example, in an illustration, the reference number 2X 37 means that two of the parts identified by reference number 37 are indicated.

List of Abbreviations

AR: as required

ASM: assembly

BBC: blade brake control

BHTF: button head thread forming

CARR: carriage

CCW: counter clockwise

CW: clockwise

DEG: degrees

DPA: Dual Point Adjustment

ECM: electronic control module

EXT: external

FH: flat head

GA: gauge

HD: heavy-duty

HF: hex flange

HH: hex head

HHF: hex head flange

HHFTF: hex head flange thread forming

HJ: hex jam

HLH: hex lag head

HOC: height-of-cut

HSBH: hex socket button head

HSFH: hex socket flat head

HSH: hex socket head

HWH: hex washer head

HWHTF: hex washer head thread forming

HYD: hydraulic

LH: left hand

LP: Liquid Propane

NI: nylon insert

NPTF: national pipe thread fine

PFH: phillips flat head

PPH: phillips pan head

PPHTF: phillips pan head thread forming

PRH: phillips round head

PTH: phillips truss head

PTO: power-take-off

RH: right hand

ROPS: roll-over protection system

RRB: rear roller brush

SFH: slotted fillister head

SHH: slotted hex head

SHWH: slotted hex washer head

SPH: slotted pan head

SQH: square head

SRH: slotted round head

STD: standard

TAP: self tapping

TTH: torx truss head

Contents

Grammer Seat with Air Ride Suspension Assembly 4
Seat Assembly No. 117-3096. 6

© 2011—The Toro® Company
8111 Lyndale Avenue South
Bloomington, MN 55420

Contact us at www.Toro.com.
Printed in the USA.
All Rights Reserved

Grammer Seat with Air Ride Suspension Assembly

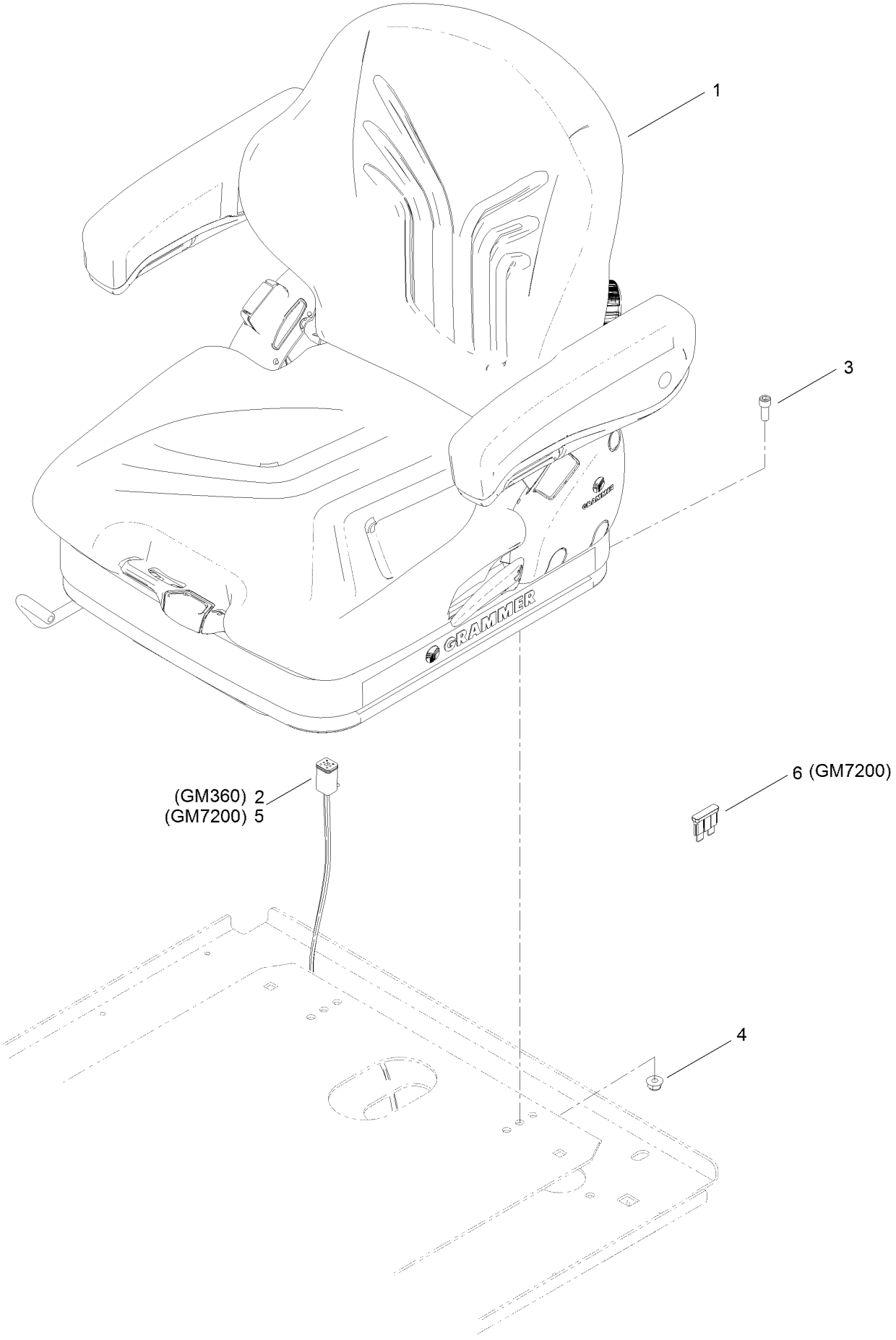

Grammer Seat with Air Ride Suspension Assembly (continued)

Ref.	Part Number	Qty.	Description
1	117-3096	1	Vinyl Air Ride Seat ASM
2	119-5787	1	Harness-Wire, Seat (Gm 360)
3	3274-10	4	Screw-HSH
4	104-8300	4	Nut-Flange, NI
5	120-3969	1	Harness-Wire, Seat (Gm7200)
6	218-578	1	Fuse-Blade, 10 Amp

Seat Assembly No. 117-3096

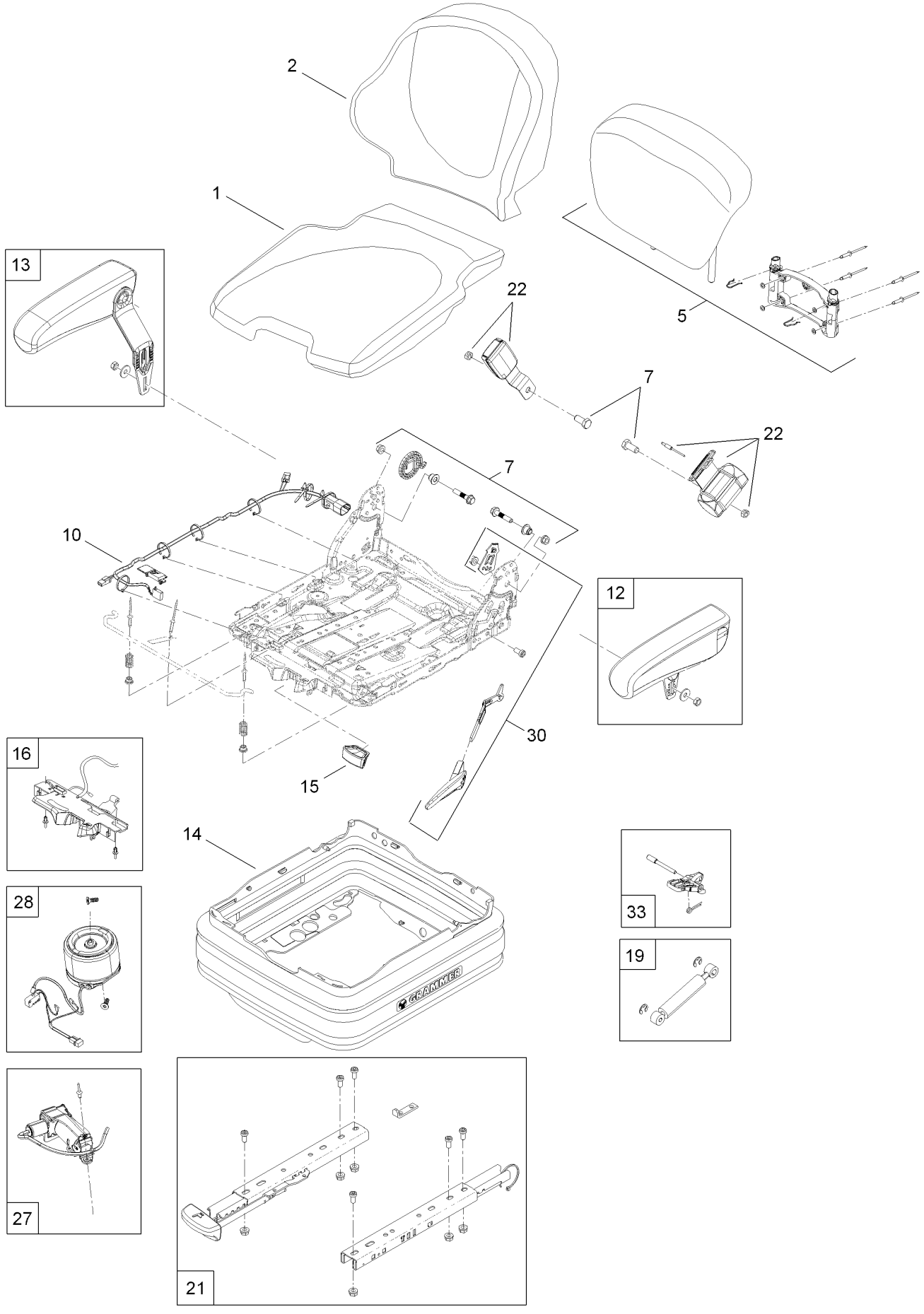

Seat Assembly No. 117-3096 (continued)

Ref.	Part Number	Qty.	Description
1	120-0581	1	Seat Cushion Kit
2	120-0582	1	Back Cushion Kit
5	120-0583	1	Extension-Backrest, Vinyl ●
7	120-0568	1	Backrest Kit
10	120-0569	1	Switch Kit
12	119-7105	1	Premium Armrest Kit
13	120-0571	1	RH Armrest Kit
14	120-0572	1	Bellows
15	120-0573	1	Handle
16	120-0574	1	Housing
19	120-0575	1	Shock Absorber Kit
21	120-0584	1	Rails Adjustment Kit
22	120-0576	1	Seatbelt Kit
27	120-0577	1	Compressor
28	120-0578	1	Air Spring Kit
30	120-0579	1	Backrest Adjustment Kit
33	120-0580	1	Lever Kit

● Optional Equipment



Count on it.