FORM NO. 3315–277

TORO®

MODEL NO. 30502 - 20001 & UP

INSTALLATION INSTRUCTIONS

52" BLOWER KIT

GROUNDSMASTER® 200 x 52" Series

SAFETY INSTRUCTIONS

BEFORE OPERATING

1. Read and understand the contents of this manual before starting and operating the machine. Become familiar with all controls and know how to stop quickly. A free replacement manual is available by sending complete Model and Serial Numbers to:

The Toro Company
8111 Lyndale Avenue South
Minneapolis, Minnesota 55420

2. Never allow children to operate the machine. Do not allow adults to operate the machine without proper instruction. Only trained operators, skilled in slope operation and who have read this manual should operate this machine.

3. Never operate machine when under the influence of drugs or alcohol.

4. Remove all debris or other objects that might be picked up and thrown by cutter blades. Keep all bystanders away from the operating area.

5. Keep all shields and safety devices in place. If a shield, safety device, or decal is defective or damaged, repair or replace it before operating machine. Also, tighten any loose nuts, bolts, and screws to insure machine is in safe operating condition.

6. Do not wear loose fitting clothing because it could get caught in moving parts. Always wear long pants and substantial shoes. Wearing safety glasses, safety shoes, and a helmet is advisable and required by some local ordinances and insurance regulations.

7. Be sure interlock switches are adjusted correctly so engine cannot be started unless traction pedal is released—neutral position—and PTO switch is in DISENGAGED position.

8. Fill fuel tank before starting the engine. Avoid spilling any fuel. Since fuel is flammable, handle it carefully.

A. Use an approved fuel container.

B. Do not fill fuel tank when engine is hot or running.

C. Do not smoke while handling fuel.

D. Fill fuel tank outdoors and up to about one inch (25 mm) from the top of the tank, not the filler neck.

E. Wipe up any spilled fuel.

ONLY COPY
DO NOT REMOVE
Tech. Publications

WHILE OPERATING

9. Sit on the seat when starting the engine and operating the machine.

10. Always make sure seat pivot retaining pin is installed.

11. Before starting the engine:

A. Engage parking brake.

B. Make sure traction pedal is in neutral and PTO is in DISENGAGE position.

C. After engine is started, release parking brake and keep foot off traction pedal. Machine must not move. If movement is evident, the neutral return mechanism is adjusted incorrectly. Shut engine off and adjust until machine does not move when traction pedal is released.

12. Do not run the engine in a confined area without adequate ventilation. Exhaust fumes are hazardous and could possibly be deadly.

13. Maximum seating capacity is one person. Therefore, never carry passengers.

14. Check carefully for overhead clearances before driving under any objects.

15. The grass deflector or complete blower assembly must always be installed on cutting unit.

16. Operator must be skilled and trained in how to drive on hillsides. Failure to use caution on slopes or hills may cause loss of control and vehicle to tip or roll, possibly resulting in personal injury or death.

17. Traverse slopes carefully. Do not start or stop suddenly when traversing slopes or when traveling uphill or downhill.

18. If engine stalls or machine loses headway and cannot make it to the top of a slope, do not turn machine around. Always back slowly straight down the slope.

©The Toro Company — 1992

SAFETY INSTRUCTIONS

19. Using the machine demands the operator's complete attention. To prevent loss of control:

A. Operate only in daylight or when there is good artificial light.

B. Drive slowly.

C. Avoid sudden stops and starts.

D. Look behind machine before backing up.

E. Watch for holes or other hidden hazards.

F. Do not drive close to a sand trap, ditch, creek, or hazard.

G. Reduce speed when making sharp turns and when turning on a hillside.

H. The cutting deck must be lowered when going down slopes for steering control.

20. The grass deflector must always be installed and in lowest position on the cutting unit when blower assembly is removed. This product is designed to drive objects into the ground where they lose energy quickly in grassy areas. However, don't take an injury risk! When a person or pet appears unexpectedly in or near the mowing area, STOP MOWING. Careless operation, combined with terrain angles, ricochets, or improperly positioned guards, can lead to thrown object injuries. Do not resume mowing until area is cleared.

21. Never raise the cutting unit while the blades or other parts are rotating.

22. If cutting blades strike a solid object or the machine vibrates abnormally, disengage PTO, move throttle to SLOW, set parking brake, and shut engine off. Remove key from switch to prevent possibility of accidental starting. Check cutting unit, blower assembly and traction unit for damage and defective parts. Repair any damage before restarting the engine and operating the cutting unit. Assure cutting unit blades are in good condition and blade bolts are tightened to proper torque specifications (See Cutting Deck Operator's Manual).

23. If the cutting unit discharge area or blower assembly ever plugs, disengage PTO and shut engine off before removing the obstruction.

24. To stop machine, remove foot from traction pedal and use brakes. Gradually reversing the traction pedal can provide additional braking.

25. Do not touch engine, muffler, or it adjacent shroud while engine is running or soon after it has stopped. These areas could be hot enough to cause a burn.

26. Lower the cutting unit to the ground and remove key from switch whenever machine is left unattended.

27. Before getting off the seat:

A. Move traction pedal to neutral position and remove foot from pedal.

B. Set the parking brake and disengage the PTO.

C. Shut the engine off and remove key from ignition switch. Wait for all movement to stop before getting off the seat.

MAINTENANCE

28. Remove key from ignition switch to prevent accidental starting of the engine when servicing, adjusting, or storing the machine.

29. If major repairs are ever needed or assistance is desired, contact an Authorized TORO Distributor.

30. To reduce potential fire hazard, keep the engine free of excessive grease, grass, leaves, and accumulations of dirt.

31. Make sure machine is in safe operating condition by keeping nuts, bolts, and screws tight. Check all cutting unit blade mounting bolts frequently to assure they are tightened to proper torque specifications (See Cutting Deck Operator's Manual).

32. Make sure all hydraulic line connectors are tight, and all hydraulic hoses and lines are in good condition before applying pressure to the system.

33. Keep body and hands away from pin hole leaks or nozzles that eject hydraulic fluid under high pressure. Use paper or cardboard, not hands, to search for leaks. Hydraulic fluid escaping under pressure can have sufficient force to penetrate skin and cause serious injury. If fluid is ejected into the skin, it must be surgically removed within a few hours by a doctor familiar with this form of injury or gangrene may result.

34. Before disconnecting or performing any work on the hydraulic system, all pressure in system must be relieved by stopping engine and lowering implement to the ground.

35. If the engine must be running to perform maintenance or an adjustment, keep clear of PTO shaft, cutting unit blades, and other moving parts.

36. At the time of manufacture, the machine conformed to safety standards in effect for riding mowers. To ensure optimum performance and continued safety certification of the machine, use genuine TORO replacement parts and accessories. Replacement parts and accessories made by other manufacturers may result in non–conformance with the safety standards, and the warranty may be voided.

SAFETY AND INSTRUCTION DECALS

The following safety and instruction decals are mounted on the machine. If any decal becomes damaged or illegible, install a new decal. Part numbers are listed below or in your parts catalog.



ON BLOWER HOUSING
(Part No. 43–8480)

WARNING
DO NOT RUN BLOWER WITHOUT DISCHARGE CHUTE ATTACHED.

ON FRONT OF BLOWER HOUSING
(Part No. 82–5510)

WARNING
REPLACE GRASS DEFLECTOR AFTER REMOVING BLOWER FROM DECK.

INSTALL ON CUTTING UNIT
(Part No. 43–1120)

LOOSE PARTS

Note: Use this chart as a checklist to ensure all parts necessary for assembly have been shipped. If any of these parts are missing, total set–up cannot be completed.

DESCRIPTION	QTY.	USE
Double Pulley Pulley Nut Nut Cover	1 1 1	Install New Pulley
Front Baffle Capscrew 5/16 – 18 x 7/8" lg. Capscrew 5/16 – 18 x 5/8" lg. Locknut 5/16 – 18	1 1 2 3	Mount Front Baffle to Deck
Rear Baffle Carriage Bolt 5/16 – 18 x 3/4" lg. Capscrew 5/16 – 18 x 7/8" lg. Locknut 5/16 – 18	1 2 1 3	Mount Rear Baffle to Deck
Center Ring Baffle Capscrew 3/8 – 16 x 1" lg. Lockwasher Capscrew 1/4 – 20 x 3/4" lg. Locknut 1/4 – 20	1 4 4 2 2	Mount Center Ring Baffle to Deck
Right Ring Baffle Capscrew 1/4 – 20 x 3/4" lg. Lock Nut 1/4 – 20	1 3 3	Mount Right Ring Baffle to Deck
Blower Assembly Bracket Plate Carriage Bolt 5/16 – 18 x 3/4" lg. Locknut 5/16 – 18 Capscrew 5/16 – 18 x 3/4" lg.	1 2 4 6 2	Mount Blower Assembly to Deck
Idler Assembly Capscrew 5/16 – 18 x 3/4" lg. Washer 5/16 Locknut 5/16 – 18	1 3 3 3	Mount Idler Assembly to Deck
Chute Assembly	1	Mount Chute Assembly to Blower
Belt Cover	1	Mount Belt Cover Assembly
Spring Bracket Capscrew 1/4 – 20 x 3/4" lg. Locknut 1/4 – 20	1 2 2	Mount Spring Bracket to Deck
Bumper Capscrew 3/8 – 16 x 1" lg. Flange Locknut 3/8 – 16 Capscrew 1/2 – 13 x 1–1/2" lg.	1 2 2 2	Install Bumper
Decal – Warning	1	Mount on Deck
Installation Instructions	1	

SET–UP INSTRUCTIONS

REMOVE CUTTING UNIT FROM TRACTION UNIT

1. Position machine on a level surface, raise cutting unit engage parking brake, be sure traction pedal is in neutral position, PTO lever is in OFF position, shut engine off and remove key from switch.

CAUTION

Counterbalance spring is in tension when deck is in lowered position. Always raise deck before adjusting or removing spring.

2. Disconnect counterbalance from traction unit, remove lock pins from brackets, separate spring tension assembly from bracket. Loosely secure lock pins to bracket to prevent loosing them (Fig. 1). Remove shoulder bolt and locknut securing spring bracket to deck bracket. Retain parts for reassembly later.

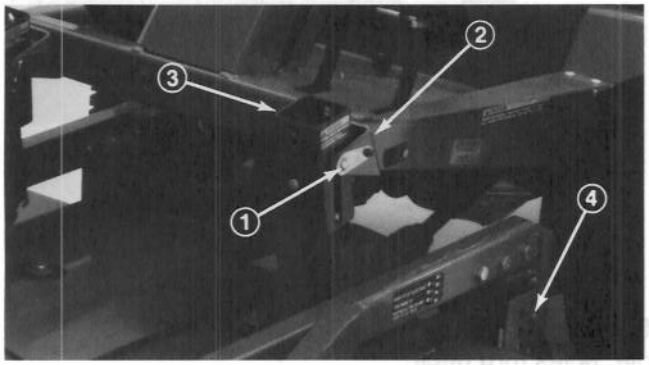

Figure 1

1. Lock pin
2. Bracket
3. Spring Tension Assembly
4. Height–of–cut Clevis Pin

3. Lower cutting unit, remove pins (4) from height–of–cut brackets (Flg. 1).

4. Start engine, raise cutting unit frame.

5. Stop engine and slide cutting unit away from traction unit and frame separating male and female section of PTO shaft (Fig. 2).

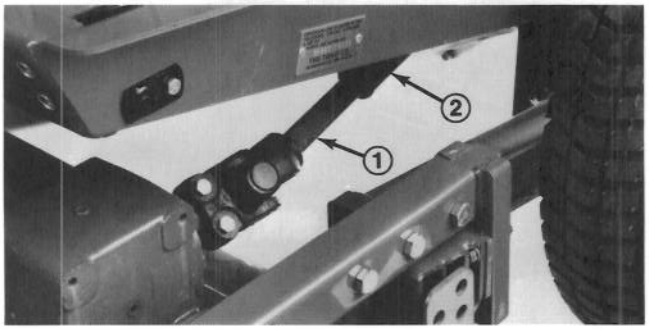

Figure 2

1. Male Shaft
2. Female Shaft

CAUTION

Do not start the engine and engage the PTO lever when PTO shaft is not connected to gear box on cutting unit. If engine is started and PTO shaft is allowed to rotate, serious injury could result.

INSTALL NEW SPINDLE PULLEY

1. Unhook latches securing right cover to top of cutting unit. Remove cover from cutting unit.

2. Loosen (2) nuts securing idler plate so tension of the idler pulley against the belt is released (Fig. 3).

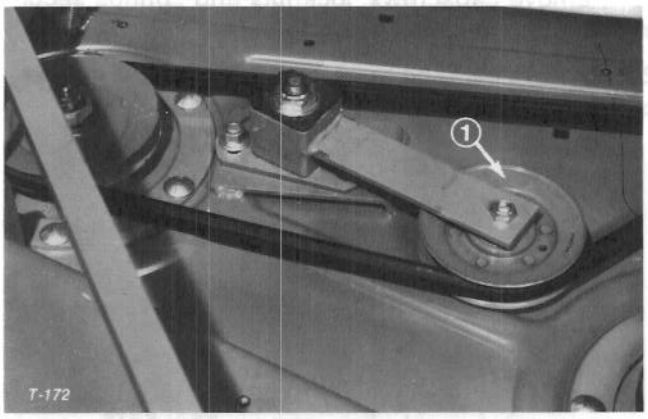

Figure 3

1. Idler Pulley

4. Remove belt from right spindle pulley (Fig. 3).

5. Remove six carriage bolts and flange nuts securing spindle housing assembly and support ring to cutting unit (Fig. 4). Slide spindle housing assembly out bottom of cutting unit.

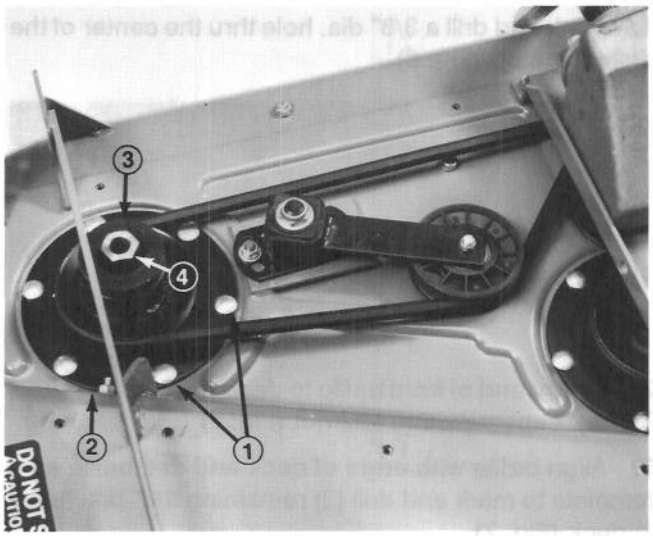

Figure 4

1. Carriage Bolts
2. Support Ring
3. Double Spindle Pulley
4. Pulley Nut

SET–UP INSTRUCTIONS

6. Remove nut retaining pulley on spindle shaft. Remove pulley from shaft.

7. Slide new double spindle pulley onto spindle shaft. Do not install pulley nut at this time.

8. Slide pulley end of spindle housing assembly through hole in cutting unit, and loop belt around pulley and idler. Mount spindle assembly in place with support ring and six carriage bolts and flange nuts.

9. Install new pulley nut onto spindle shaft and tighten to 100 ft–lb. Install nut cover.

10. Adjust (tighten) idler adjusting nut to 35–40 ft–lb to achieve proper belt tension. Tighten idler plate nuts.

REMOVE GRASS DEFLECTOR

1. Remove capscrews, locknuts and springs securing deflector mounts to pivot brackets (Fig. 5).

2. Remove carriage bolts, lockwashers and nuts securing pivot brackets to housing (Fig. 5).

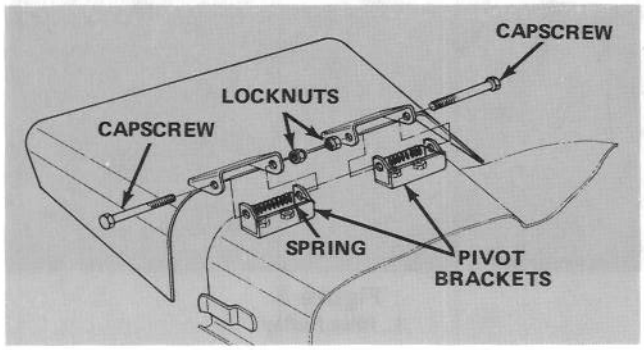

Figure 5

3. Retain grass deflector and mounting parts for later installation.

MOUNT DECK BAFFLES

1. Mark and drill a 3/8" dia. hole thru the center of the deflector stop (Fig. 6).

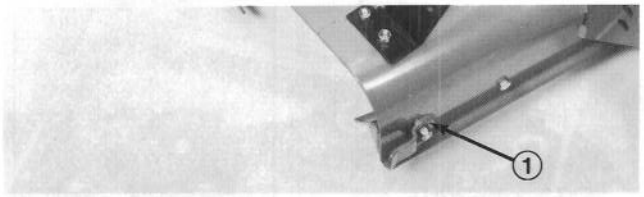

Figure 6
1. Deflector Stop

2. Mount end of front baffle to deck with a 5/16 – 18 x 7/8" lg. capscrew and locknut (Fig. 7)

3. Align baffle with edge of deck and use baffle as a template to mark and drill (2) remaining 3/8" dia. holes in deck (Fig. 7).

4. Secure baffle to deck with (2) 5/16 – 18 x 5/8" lg. capscrews and locknuts (Fig. 7).

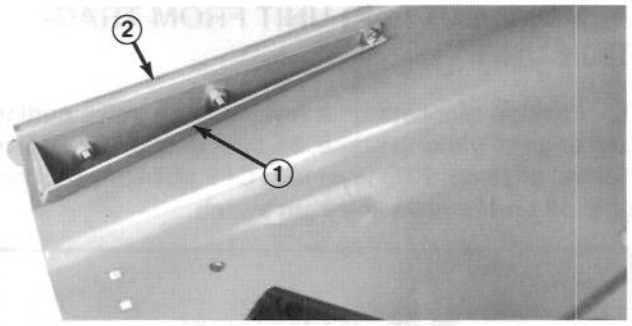

Figure 7
1. Front Baffle **2. Edge of Deck**

5. Align rear baffle with corner of discharge opening (Fig. 8).

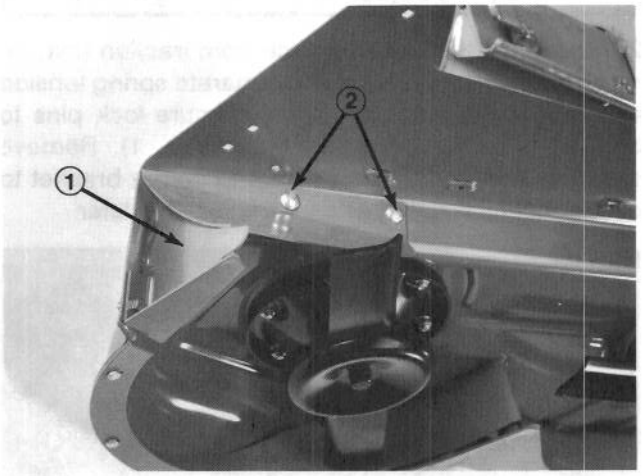

Figure 8
1. Rear Baffle **2. Carriage Bolts**

6. Using baffle as a template, mark and drill (3) 3/8" dia. holes thru deck.

7. Secure baffle to deck with (2) 5/16 – 18 x 3/4" lg. carriage bolts, (1) 5/16 – 18 x 7/8" lg. capscrew and (3) locknuts.

8. Position center ring baffle on deck (Fig. 9). Using a long thin pencil or punch, mark (4) mounting holes in deck. Holes may already be in deck.

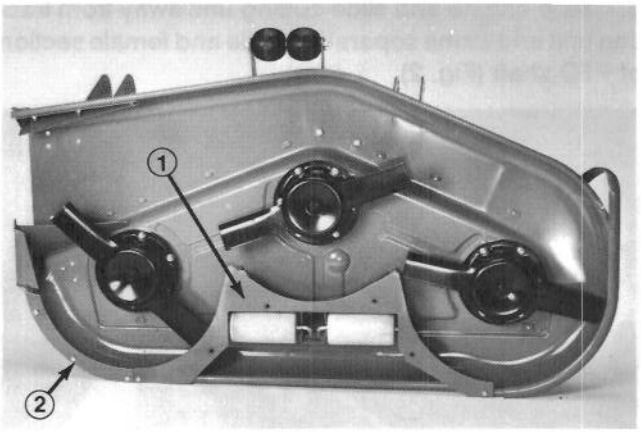

Figure 9
1. Center Ring Baffle **2. Right Ring Baffle**

SET–UP INSTRUCTIONS

9. Drill (4) 13/32" holes in deck, if required.

10. Mount center baffle to deck with (4) 3/8 – 16 x 1" lg. capscrews and lockwashers (Fig. 9).

11. Using center baffle as a template, mark and drill (2) 9/32" dia. holes through center of curved edge of deck (Fig. 9).

12. Secure baffle to edge of deck with (2) 1/4 – 20 x 3/4" lg. capscrews and locknuts (Fig. 9).

13. Align right ring baffle with end of center baffle and edge of deck (Fig. 9). Mark and drill (3) 9/32" dia. holes in center of curved edge of deck.

14. Secure right baffle to deck with (3) 1/4 – 20 x 3/4" lg. capscrews and locknuts.

15. Make sure all fasteners are tight. Carefully rotate blades by hand to make sure they clear baffles.

MOUNT BLOWER

1. Position blower and mounting brackets on deck, aligning mounting holes with holes previously used for mounting grass deflector (Fig. 10). Figure shown with blower removed.

Note: If cutting unit was previously equipped with a bagger which required a large hole in discharge area of deck, mount cover plate (order part no. 44–5750 from an authorized TORO Distributor) between bolt head and bottom side of deck instead of bracket plates.

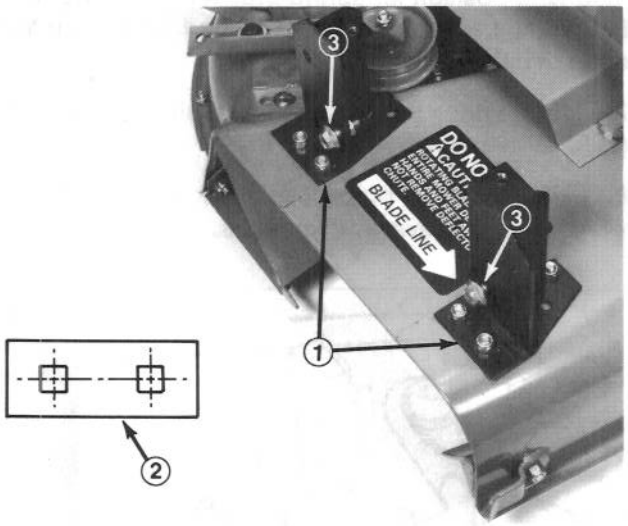

Figure 10
1. Blower Mounting Brackets
2. Bracket Plate
3. Alignment studs

2. Making sure no air gap exists between blower and cutting deck, secure each bracket to deck with a bracket plate (Fig. 10, inset), (2) 5/16 –18 x 3/4" lg. carriage bolts and locknuts. Position bracket plates between bolt head and bottom side of deck.

3. Using each bracket as a template, mark location of third mounting hole (left rear position) See Fig. 11.

4. Remove (2) knobs securing blower to mounting brackets. Remove blower.

5. Drill a 3/8" dia. hole for each bracket and secure with a 5/16 –18 x 3/4" lg. capscrew and locknut.

6. Route belt around small spindle pulley.

7. Slide blower onto mounting bracket alignment studs (Fig. 11) while routing belt around blower pulley.

Note: If blower assembly does not easily slide onto mounting brackets, loosen alignment bolts slightly.



Figure 11
1. Left Rear Mounting Hole

8. Secure blower to brackets with (2) knobs.

INSTALL IDLER ASSEMBLY

1. Position idler assembly on deck; see Fig. 12.

2. Engage idler lever (toward belt) and slide idler pulley firmly into blower belt. To provide for future adjustment, there should be at least 1/4" clearance between front of idler mounting bracket and raised rib in deck (Fig. 12, inset.) Mounting bracket should be positioned on flat part of deck. Make sure idler pulley clears spindle pulley and blower and idler lever clears carrier frame when in the engaged position. Mounting bracket should be at approximately 15° to deck rib (Fig. 12, inset).

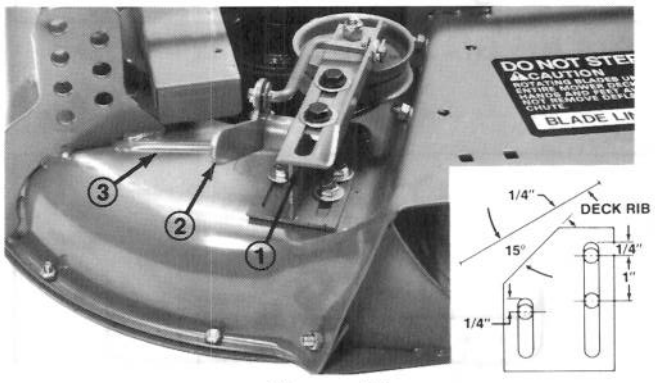

Figure 12
1. Idler Assembly
2. Idler Lever
3. Raised Rib in Deck

3. Using dimensions shown in Fig. 12, Inset, locate and drill (3) 3/8" dia. holes in deck.

SET–UP INSTRUCTIONS

4. Disengage idler lever and mount idler assembly to deck with (3) 5/16 –18 x 3/4" lg. capscrew, 5/16 washers and locknut. Position washer between nut and idler assembly.

5. Engage idler lever and check belt tension. Adjust if necessary.

REPOSITION COUNTERBALANCE SPRING

1. Remove fasteners securing counterbalance spring mounting bracket to front of traction unit frame (Fig. 13).

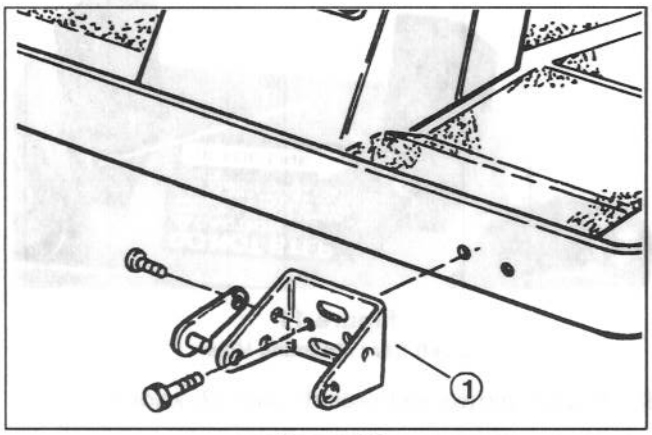

Figure 13
1. Mounting Bracket

2. Reinstall mounting bracket to appropriate mounting holes on front of traction unit (Fig. 14 or 15).

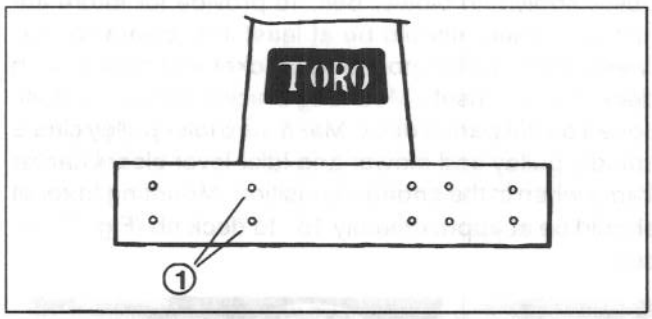

GM 223–D & GM 224
Figure 14
1. Use these mounting holes

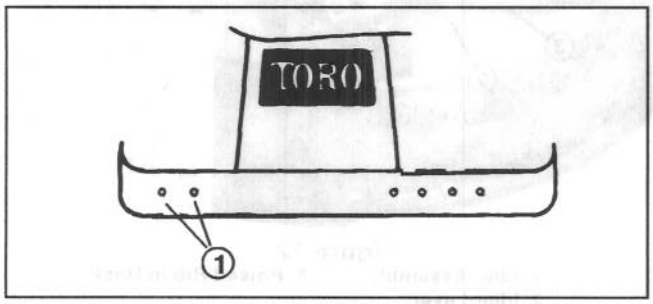

GM 220
Figure 15
1. Use these mounting holes

3. Reinstall counterbalance spring assembly to mounting bracket with lock pins, previously removed (Fig. 1).

4. Steering must be readjusted to maintain correct turning radius. Turn steering wheel fully toward left. (Not required on Groundsmaster 223–D or 224). Loosen jam nuts (both ends) and lengthen steering tube until right hand spindle contacts axle stop. Tighten jamnuts (both ends) on steering tube (Fig.16).

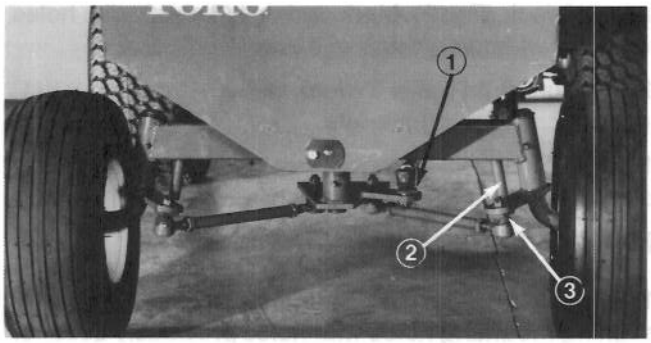

Figure 16
1. Steering Tube
2. Axle Stop
3. Right Hand Spindle

5. Install new belt cover and latch in place.

6. Using dimensions shown in figure 17, locate mounting position for spring bracket on cutting deck. Bracket to be parallel and positioned 1/16" from front edge of belt cover.

7. Using spring bracket as a template, mark and drill (2) 9/32" dia. holes in cutting deck.

8. Secure spring bracket to deck with (2) 1/4–20 x 3/4" lg. capscrews and locknuts.

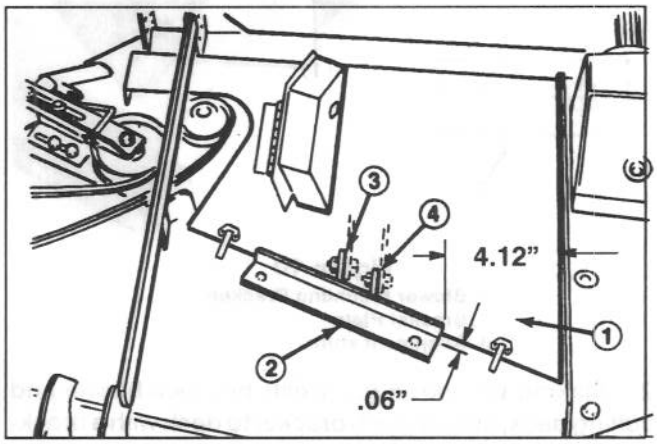

Figure 17
1. New Belt Cover
2. Spring Bracket
3. Tab for Groundsmaster 220
4. Tab for Groundsmaster 223–D & 224

SET–UP INSTRUCTIONS

INSTALL CUTTING UNIT

1. Make sure PTO shaft on traction unit clears cutting unit frame, engage parking brake, be sure traction pedal is in neutral position, PTO lever is in OFF position, start engine and raise frame.

2. Stop engine, slide cutting unit under frame, align male PTO shaft with female PTO shaft and slide together.

3. Lower frame. Install clevis pins through desired height–of–cut bracket holes and frame to secure cutting unit to frame. Secure all four pins with clevis pins.

4. Start engine and raise frame. Secure counterbalance spring knee link to cutting unit spring bracket with shoulder bolt and locknut previously removed (Fig. 18). Make sure to mount counterbalance to proper tab on cutting unit spring bracket.

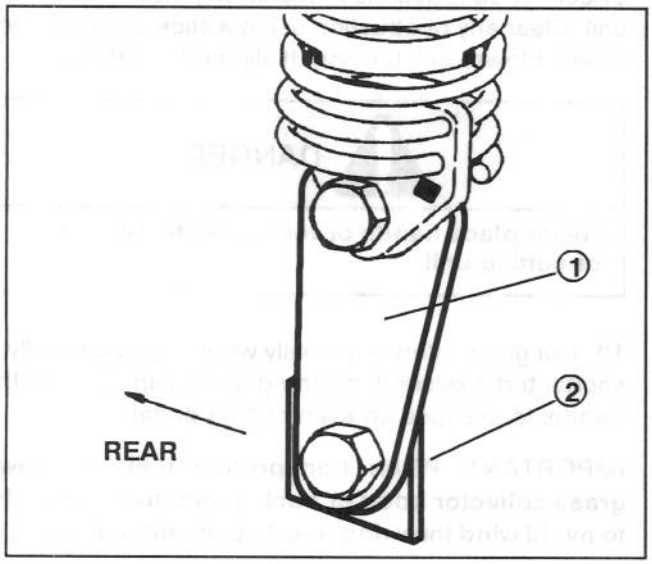

Figure 18

1. Counterbalance Spring Knee Link
2. Deck Mounting Bracket

INSTALL BUMPER

1. Place cutting unit in highest height–of–cut position; refer cutting unit Operator's manual.

2. On right side of carrier frame, remove (2) forward 1/2 – 13 x 1–1/2" lg. capscrews securing carrier frame to lift arm (Fig. 19). Align rear of bumper with the two holes, center punch and drill (2) 13/32" dia. holes for the front bumper bracket in the carrier frame channel.

3. Mount bumper and secure with (2) 1/2 – 13 x 1–1/2" lg. capscrews at lift arm / carrier frame connection and (2) 3/8 – 16 x 1" lg, capscrews and 3/8 – 16 flange locknuts at the front bracket location. Torque the 1/2 – 13 x 1–1/2" lg. capscrews to 70–80 ft–lb (Fig. 19).

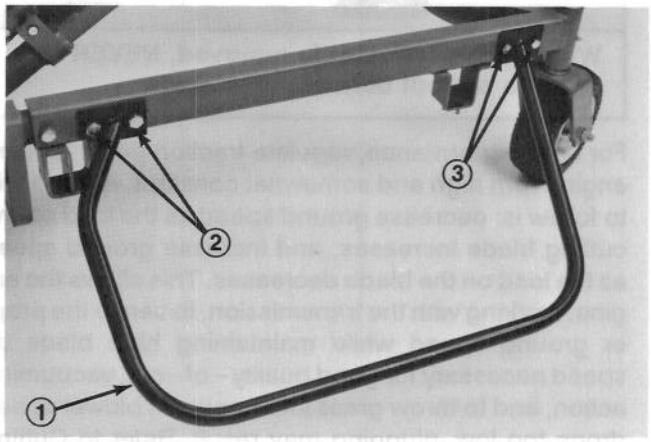

Figure 19

1. Bumper
2. 1/2–13 x 1–1/2" lg. Capscrews
3. 3/8–16 x 1" lg. Capscrews & 3/8–16 Flange Locknuts

INSTALL NEW DECAL

Install warning decal to cutter deck either just under the right hand carrier frame member or just inside of it.

MOUNT BLOWER HOUSING CHUTE

1. Set deck into desired height–of–cut setting.

2. Slide chute over blower opening and onto mounting studs (Fig. 20).

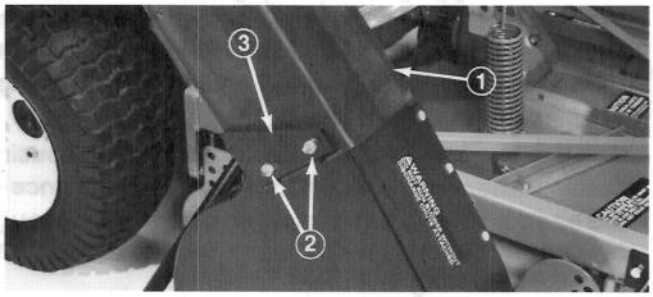

Figure 20

1. Chute 2. Mounting Stud 3. Chute Bracket

5. Lower hopper hood and align chute with hood snout. Secure chute in position with (4) 5/16 locknuts and chute brackets. Wide end of brackets to be positioned to rear (Fig. 20).

OPERATING INSTRUCTIONS

OPERATING CHARACTERISTICS (When used with a 9 cu. ft. or 15 cu. ft. Hopper kit)

CAUTION

When grass collector is removed, NEVER operate without deflector in place.

For best performance, regulate traction pedal to keep engine rpm high and somewhat constant. A good rule to follow is: decrease ground speed as the load on the cutting blade increases; and increase ground speed as the load on the blade decreases. This allows the engine, working with the transmission, to sense the proper ground speed while maintaining high blade tip speed necessary for good quality–of–cut, vacuuming action, and to throw grass into hopper. If blower speed drops too low, plugging may result. Refer to Cutting Unit and Traction Unit Operator's Manual for operation of each.

CAUTION

Use care to avoid collision between hopper and any stationary objects. Always trim with left side of cutting unit.

1. This grass collector is designed for use in wet or dry conditions. Do not collect extremely long grass as the hopper will fill too quickly.

2. When bagging wet, heavy grass, some clippings may not be thrown completely through the chute. The hole in the bottom of the chute allows these clippings to drop out without plugging the chute. When this happens, reduce ground speed.

3. The bumper which protects the blower housing doesn't extend far enough to eliminate the chance of the bagger striking a stationary object. Stay far enough away from obstructions to avoid collisions. Trim with left side of cutting unit only.

4. To improve productivity, Toro recommends purchasing additional seven or ten bushel grass bags from your local Toro dealer. Store empty bags in tray of lower support tube assembly and drop off filled and sealed bags to be collected later.

5. The optional ten bushel grass bags should not be used under extremely wet grass conditions as they may be too heavy to remove easily.

6. Heavy duty lawn trash bags may be used with an optional retainer cord (Toro part no. 36–7770). High winds may cause bottom of empty bags to shift off lower tray. If this happens mow until slightly filled and recenter on tray.

7. The grass deflector hood is designed to exhaust air beside the the grass bag rather than through it. This allows the grass bag to fill completely without without decreasing performance. Grass will fall through the opening in the front of the hood when the grass bag is full. Immediately disengage the power take off, set brake and shut off ignition. Change or empty grass bag. Failure to change or empty grass bag will plug the chute. After changing bag, check that grass clippings have not fallen into chute.

8. Optional Hi–sail blades (Toro part no. 44–5480) will give improved performance in wet cutting conditions.

9. While operating, check frequently for excessive clippings left on turf or uncut grass. If those conditions occur, the blower or cutting unit may be plugged. Stop unit, disengage PTO, set brake and shut off ignition. Check for obstructions in the chute, blower or cutting unit. Clear any obstruction using a stick or similar tool. Check blower belt tension. If slipping, readjust.

DANGER

Never place hands or feet in chute, blower, or cutting unit.

10. Cut grass often, especially when it grows rapidly. If shorter turf is desired, cut the grass again. Overlap the swaths to produce an even cutting pattern.

IMPORTANT: When transporting unit, tie down grass collector hood or back it onto truck or trailer to avoid wind throwing hood open and damaging it.

BLOWER REMOVAL

1. Shut engine off, disengage idler, unlatch and open belt cover and lift belt off spindle pulley. Close cover. Remove (2) knobs securing blower to mounting brackets and remove blower, belt and chute.

2. Reverse procedure to reinstall blower assembly.

USING GRASS DEFLECTOR

1. Remove bumper from carrier frame. Reinstall (2) lift arm/carrier frame connection capscrews. Torque to 70–80 ft–lb.

2. Position grass deflector mounts on outside of pivot brackets (included in kit) and secure parts together with capscrews, locknuts and washers previously removed (Fig. 21). Both locknuts must face each other. Tighten locknuts until they are flush against deflector pivots.

OPERATING INSTRUCTIONS

3. Slide grass deflector and pivot brackets onto alignment bolts and secure to mounting brackets with knobs and washers. Lift deflector and allow it to drop to check spring tension.

Note: If blower assembly or grass deflector do not easily slide on or off mounting brackets, loosen alignment bolts slightly.

CAUTION

When grass collector is removed, NEVER operate without deflector in place.

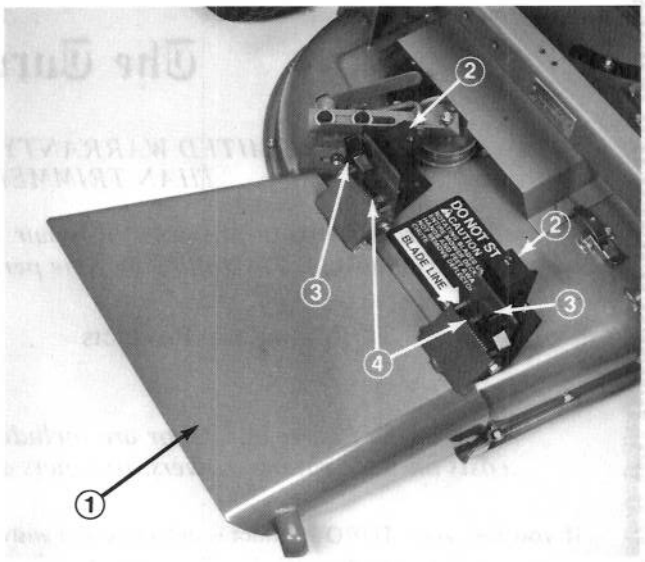

Figure 21

1. Grass Deflector
2. Mounting Bracket
3. Knob and Washer
4. Alignment Bolts

MAINTENANCE

1. Keep unit clean. Assure engine is free of dirt and chaff. Make sure all fasteners are tight. Check deflectors, baffles and shields for wear and replace as needed.

2. Check blower gearbox impeller for tightness every 50 hours. Torque impeller shaft bolt to 220-230 in.-lbs.

3. Clean grass clippings from hood, chute, blower and cutting unit after each use. Wash underside of cutting unit daily with hose. An excessive buildup of clippings will impair collection system performance.

4. Check belt tension and wear every 50 hours. To adjust belt tension, loosen idler mounting screws, engage idler lever and push idler pulley firmly into blower belt. Tighten mounting screws.

5. The blower gear box should need little maintenance. Check for leakage every 50 hours. If leakage should occur, replace seals and refill with 2 oz. of high quality moly di–sulfide grease. Repack bearings with this grease before assembling.

6. Refer to Cutting Unit and Traction Unit Operator's Manuals for service requirements of each.

The Toro Promise

A ONE YEAR LIMITED WARRANTY ON COMMERCIAL PRODUCTS OTHER THAN TRIMMERS AND BLOWERS.

The Toro Company promises to repair your TORO Product if defective in materials or workmanship. The following time periods from the date of purchase apply:

Commercial Products . . . . . 1 Year

The costs of parts and labor are included, but the customer pays the transportation costs on walk rotary mowers, trimmers and blowers.

If you feel your TORO product is defective and wish to rely on The Toro Promise, the following procedure is recommended:

1. Contact your Authorized TORO Distributor or Commercial Dealer (the Yellow Pages of your telephone directory is a good reference source).
2. The TORO Distributor or Commercial Dealer will advise you on the arrangements that can be made to inspect and repair your product.
3. The TORO Distributor or Commercial Dealer will inspect the product and advise you whether the product is defective and, if so, make all repairs necessary to correct the defect without an extra charge to you.

If for any reason you are dissatisfied with the distributor's analysis of the defect or the service performed, you may contact us.

Write:

TORO Commercial Products Service Department
8111 Lyndale Avenue South
Minneapolis, Minnesota 55420

The above remedy of product defects through repair by an Authorized TORO Distributor or Commercial Dealer is the purchaser's sole remedy for any defect.

THERE IS NO OTHER EXPRESS WARRANTY. ALL IMPLIED WARRANTIES OF MERCHANTABILITY AND FITNESS FOR USE ARE LIMITED TO THE DURATION OF THE EXPRESS WARRANTY.

Some states do not allow limitations on how long an implied warranty lasts, so the above limitation may not apply to you.

This Warranty applies only to parts or components which are defective and does not cover repairs necessary due to normal wear, misuse, accidents, or lack of proper maintenance. Regular, routine maintenance of the unit to keep it in proper condition is the responsibility of the owner.

All warranty repairs reimbursable under the Toro Promise must be performed by an Authorized TORO Commercial Dealer or Distributor using Toro approved replacement parts.

Repairs or attempted repairs by anyone other than an Authorized TORO Distributor or Commercial Dealer are not reimbursable under the Toro Promise. In addition, these unauthorized repair attempts may result in additional malfunctions, the correction of which is not covered by warranty.

THE TORO COMPANY IS NOT LIABLE FOR INDIRECT, INCIDENTAL OR CONSEQUENTIAL DAMAGES IN CONNECTION WITH THE USE OF THE PRODUCT INCLUDING ANY COST OR EXPENSE OF PROVIDING SUBSTITUTE EQUIPMENT OR SERVICE DURING PERIODS OF MALFUNCTION OR NON-USE.

Some states do not allow the exclusion or limitation of incidental or consequential damages, so the above limitation or exclusion may not apply to you.

This warranty gives you specific legal rights, and you may also have other rights which vary from state to state.

COUNTRIES OTHER THAN THE UNITED STATES OR CANADA

Customers who have purchased TORO products exported from the United States or Canada should contact their TORO Distributor (Dealer) to obtain guarantee policies for your country, province or state. If for any reason you are dissatisfied with your Distributor's service or have difficulty obtaining guarantee information, contact the TORO importer. If all other remedies fail, you may contact us at The Toro Company.

Compliance with Radio Interference Regulations Certified.
Certifie Conforme au Reglement sur le Brouillage Radioelectrique.

Litho in U.S.A.