FORM NO. 3314-809

TORO®

MODEL NO. 59167

INSTALLATION INSTRUCTIONS

# RECYCLER® KIT

FOR TORO® 32" SINGLE BLADE DECKS 1982 AND NEWER

Since this instruction sheet covers only a small portion of the information necessary to maintain and operate your unit, we suggest that you keep this material with your Operator's Manual so that both may be referred to for instructions concerning safe operation and proper maintenance procedures.

## ASSEMBLY INSTRUCTIONS

**NOTE:** Make sure engine is shut off and wire is removed from spark plug. **Remove the cutting deck and all bagging attachments from unit as instructed in operator's manual.**

### REMOVE OLD BLADE

1. Use a rag or thickly padded glove to hold old blade. Depending on your unit's blade assembly, remove lock nut, anti-scalp cup, and blade (Fig. 1) or blade bolt, washer, blade stiffener, and blade (Fig. 2).

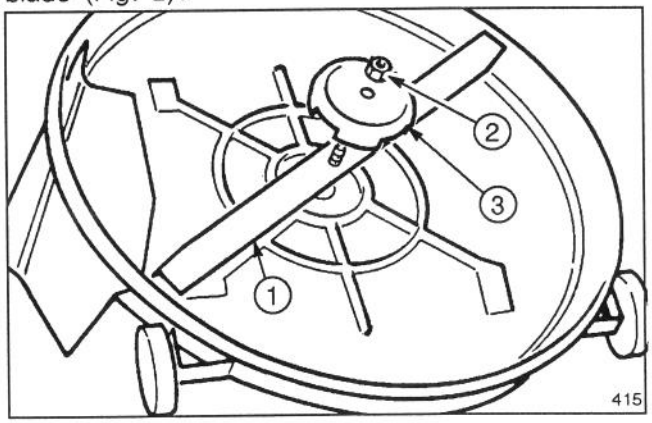


Figure 1

1. Blade 2. Lock nut 3. Anti-scalp cup

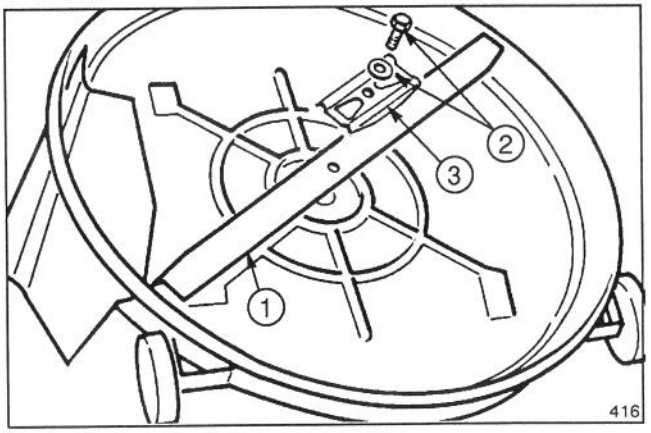


Figure 2

1. Blade 2. Blade bolt & washer 3. Blade stiffener

**NOTE:** Since blade fasteners are tightened at the factory, it may be difficult to remove them. If the blade bolt or nut cannot be removed, contact an Authorized TORO Service Dealer for assistance.

### REMOVE DECK BAFFLE

1. Remove (2) capscrews, washers and lock nuts securing baffle to underside of mower housing (Fig. 3).

2. Remove baffle; retain for future use if Recycler® Kit is removed. DO NOT REMOVE DEFLECTOR NUT FROM MOWER HOUSING.

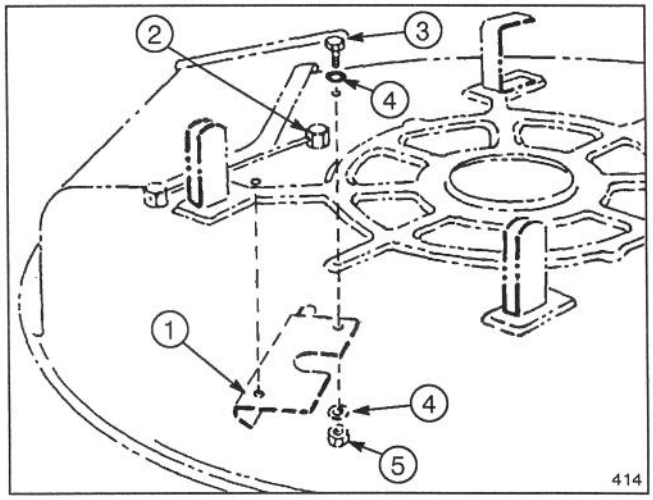


Figure 3

1. Deck baffle
2. Deflector nut
3. Hex head capscrew
4. Flat washer (2)
5. Lock nut

© The TORO Company - 1991

# ASSEMBLY INSTRUCTIONS

## MARK AND DRILL HOLES

Two of the four sets of kicker holes are already in the mower deck (Fig. 4).

Holes for the rear kickers will need to be marked and drilled (Fig. 4). Use the kickers as templates for marking holes. All of the kickers are identical so it does not matter which one is used as a template.

Make sure underside of mower deck is clean before marking holes or installing kickers. If the underside of the deck is dirty, it will be difficult to see punch marks.

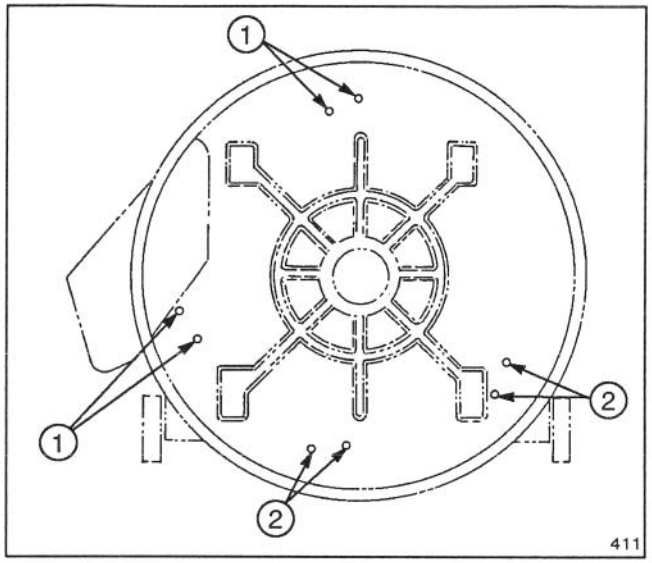


**Figure 4**

1. Holes already in mower deck
2. Holes to be drilled in mower deck

When marking holes, hold kicker firmly against mower deck, and use a center punch to mark hole locations.

**1.** Position first rear kicker on underside of mower deck so flat edge is aligned with embossed surface of deck and bent edge is firmly against mower deck wall as shown in Figure 5.

**2.** Mark hole locations with punch and remove kicker.

**3.** Position a kicker in second rear kicker position so point of kicker aligns with embossed surface of mower deck and bent edge is firmly against mower deck wall as shown in Figure 5.

**4.** Mark hole locations with punch and remove kicker.

**IMPORTANT: DO NOT DRILL THROUGH HOLES IN KICKERS AS KICKER DAMAGE MAY OCCUR.**

**5.** Using a sharp drill bit, drill 11/32" (.343) dia. holes in deck. Drill must be sharp to prevent it from walking.

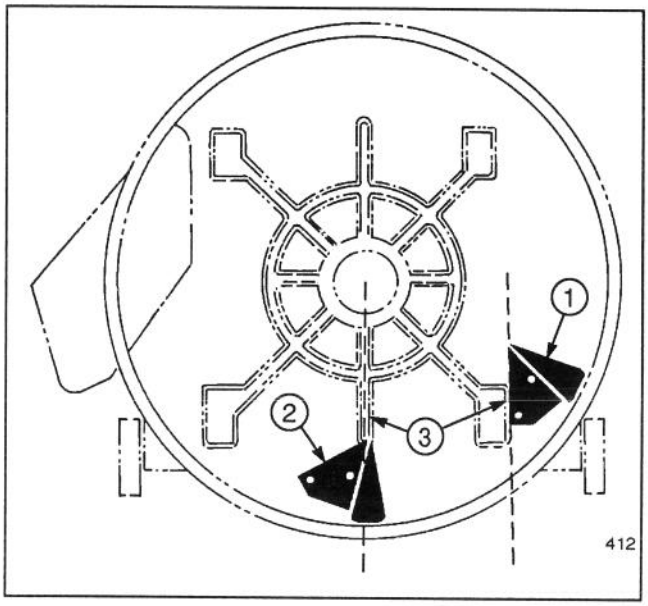


**Figure 5**

1. First rear kicker
2. Second rear kicker
3. Embossed deck surface

## INSTALL KICKERS

The four steel kickers are identical. All of the kicker capscrews are the same length except for one extra long capscrew used to install the kicker near the discharge area. When installing kickers, insert capscrews from the underside of the deck.

**1.** Begin by installing the kicker near the discharge area. This kicker location uses an existing pair of holes. The capscrew securing the deck baffle was removed from one of the holes.

**2.** Position the kicker as shown in Figure 6, aligning holes in kicker with holes in deck.

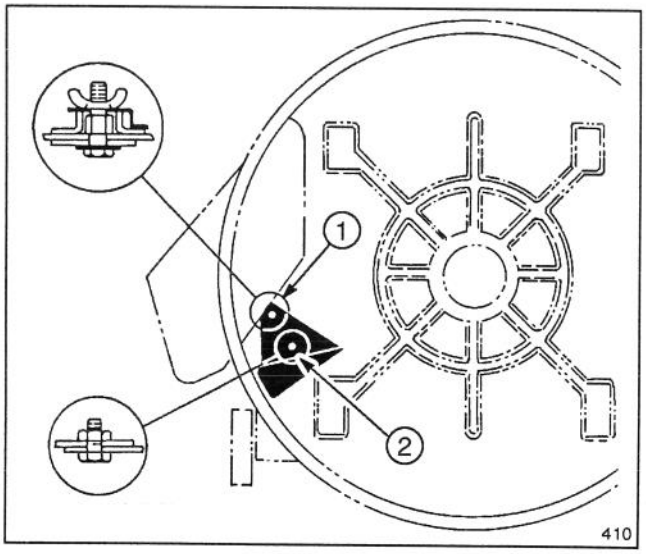


**Figure 6**

1. Long capscrew, washer, locknut & wingnut
2. Short capscrew & locknut

# ASSEMBLY INSTRUCTIONS

**3.** Install, in sequence, the long capscrew, flat washer and locknut in first kicker hole as shown in Figure 6.

**Note:** A wingnut will be placed on the long capscrew to secure the discharge cover to the deck. Refer to Install Discharge Cover, page 4.

**4.** Insert a short capscrew in remaining kicker hole and secure to deck with locknut.

**5.** Align the remaining three kickers with holes in deck and secure in place with short capscrews and locknuts (Fig. 7).

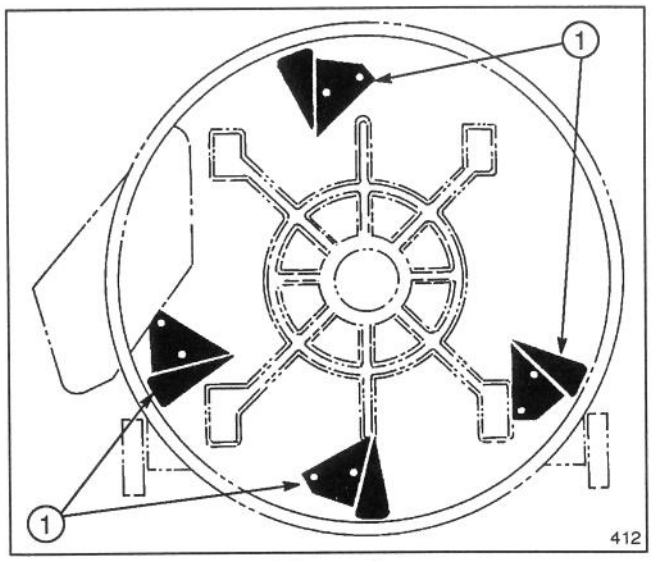


**Figure 7**

1. Kickers

## INSTALL DECK RING

The four deck ring pieces are identical. When installing deck ring, begin with the rim hole in the center of the discharge area and continue installing pieces in a counterclockwise direction around rim of deck. Make sure all capscrew heads are positioned downward.

**1.** Align holes in first two deck ring pieces with rim hole in center of discharge area (Fig. 8). Secure ring pieces to deck with capscrew and locknut.

**2.** Continue securing deck ring pieces to deck in a counterclockwise direction using remaining (7) capscrews and locknuts (Fig. 8).

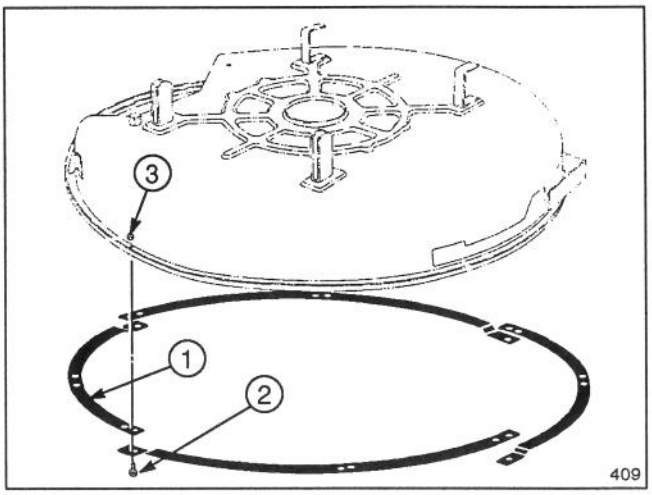


**Figure 8**

1. Deck ring 2. Capscrew 3. Locknut

## INSTALL SPACERS

Spacers must be installed on the Proline 32" wide area mower model 30133 to lower the blade assembly. The spacers can also be installed on any consumer unit experiencing blade interference with the kickers.

**1.** Remove lock nut and washer securing drive pulley on spindle (Fig. 9).

**2.** Remove drive pulley from spindle.

**3.** Slide spindle out of spindle housing.

**4.** Remove (8) hex head cap screws and lock nuts securing spindle housing to deck (Fig. 9).

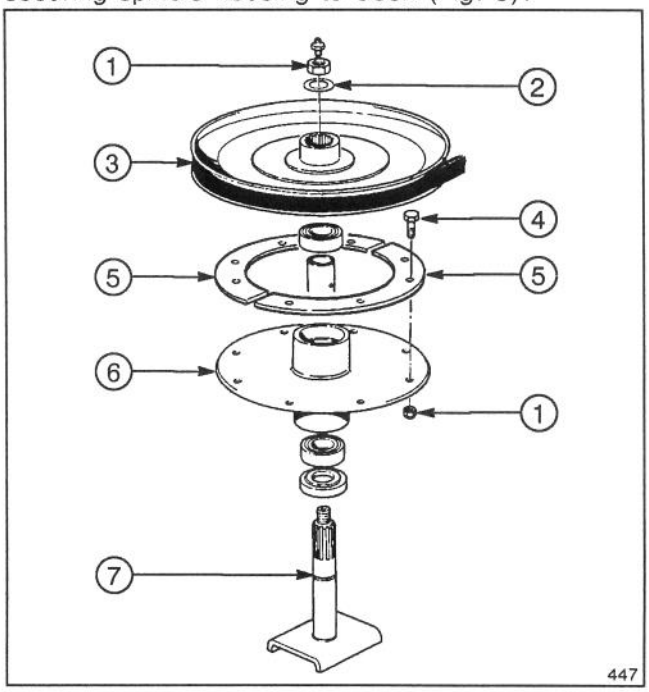


**Figure 9**

1. Lock nut
2. Washer
3. Drive pulley
4. Hex head cap screw
5. Spacer
6. Spindle housing
7. Spindle

# ASSEMBLY INSTRUCTIONS

**5.** Align holes in (2) spacers with holes in spindle housing.

**6.** Secure spacers and spindle housing to deck with (8) hex head cap screws and lock nuts (Fig. 9).

**7.** Reinstall spindle and drive pulley assembly.

## INSTALL NEW BLADE

**1.** Depending on your unit, install in sequence the new blade, anti-scalp cup (if one was on unit), and lock nut (Fig. 10) or the new blade, blade stiffener (if one was on unit), washer and blade bolt (Fig. 11). Tighten blade bolt to 50 ft-lbs.

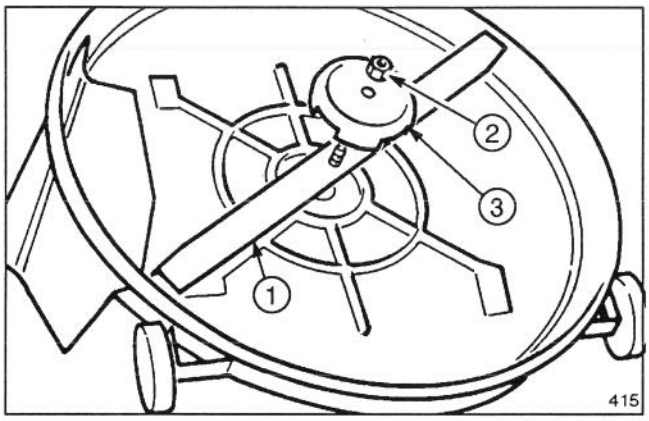


**Figure 10**

1. Blade 2. Lock nut 3. Anti-scalp cup

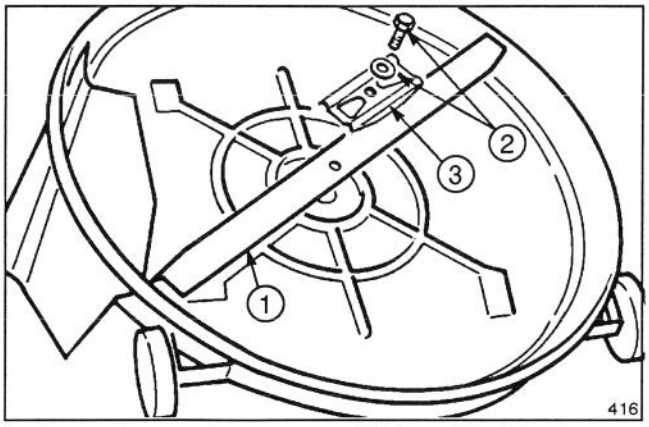


**Figure 11**

1. Blade 2. Blade bolt & washer 3. Blade stiffener

## INSTALL DISCHARGE COVER

**1.** Lift grass deflector and slide plastic discharge cover into front hinge (Fig. 12).

**2.** Slide hinge pin through hinge (Fig. 12).

**3.** Secure cover to deck with wing nut (Fig. 12).

**4.** If any interference between the plastic discharge cover and the welded hinge on deck occurs, trim approx. 1/8" off the top of the bottom plastic tab on discharge cover (Fig. 12).

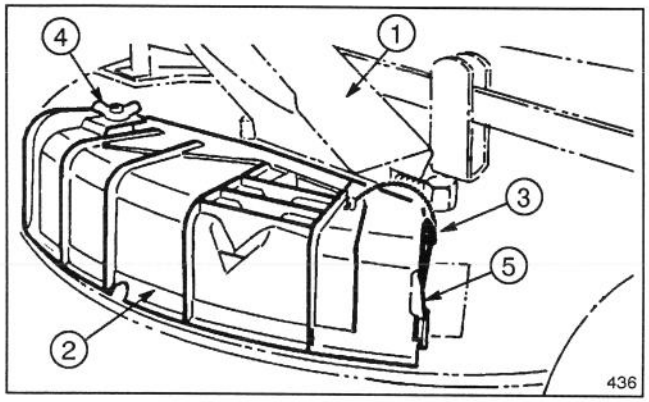


**Figure 12**

1. Grass deflector
2. Discharge cover
3. Hinge pin
4. Wing nut
5. Trim approx. 1/8" off this area if necessary

## INSTALL DECAL (optional)

**1.** Thoroughly clean left side of deck with a soap and water solution.

**NOTE:** Deck must be dry before installing decal.

**2.** Install decal (Fig. 13).

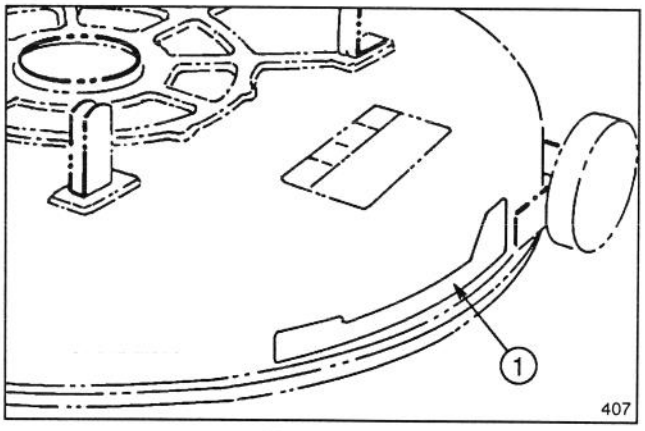


**Figure 13**

1. Decal

# OPERATING INSTRUCTIONS

## TIPS FOR CUTTING GRASS

Even with the Recycler® Kit, you may encounter conditions where it is not possible to incorporate all of the grass clippings or leaves all of the time into the grass. Follow these instructions for the best cutting results and lawn appearance:

- Always use FAST (full) throttle when mowing.

- Maintain a **sharp blade** throughout the cutting season. A sharp blade cuts cleanly and without tearing or shredding the grass blades like a dull blade. Tearing and shredding causes the grass to turn brown at the edges which impairs growth and increases susceptibility to diseases. About every 30 days, remove the wire from the spark plug and check the cutter blade for sharpness. File down any nicks on blade to restore its sharp edge.

- Clean any residue from the underside of the mower housing and kickers after each use. If residue is allowed to build up in mower housing and on kickers, cutting performance may be unsatisfactory.

- Very long or extremely wet grass can be cut, but specific operating techniques must be used. Start by setting height-of-cut in the highest position. Using 1st gear and maximum throttle speed, move into the grass and cut a swath that is only half as wide as the mower housing. If side discharging, direct grass clippings toward area that was cut previously. Stop forward movement occasionally to allow discharge area to clear itself. Cutting too much grass may clog the mower housing and discharge area. If mower housing does clog, shut engine off, disengage blade and remove the obstruction with a stick.

**DANGER**

**Before removing any obstruction from mower housing, move blade control into DISENGAGE detent, depress clutch and brake pedals, shift into neutral and turn ignition key to OFF position. Remove wire from spark plug to prevent the possibility of accidental starting.**

- When the Recycler® deck is used to cut a lawn for the first time, cut grass slightly longer than normal to ensure that cutting height of mower housing will not cause scalping, which could result from severe undulations of the ground. In general, however, the cutting height used in the past is probably the best one to use. When cutting grass over six inches tall, you may want to cut the lawn twice to hide clippings down in the grass.

- If the grass is ever allowed to grow slightly longer than normal, or if it contains a high degree of moisture, raise cutting height higher than usual and cut the grass at this setting. Next, cut the grass again using the lower, normal setting. This method of cutting long grass results in an even distribution of clippings and an acceptable quality-of-cut.

- In the heat of the summer, it is best to cut only about 1/3 of the grass blade. Cutting below the 3rd height-of-cut setting is not recommended unless grass is sparse or it is late fall when grass growth begins to slow down.

- If the cutting width of the deck is wider than the mowing deck previously used, raise height-of-cut setting one notch to ensure undulations in turf are not cut too short.

- MOWING IN EXTREME CONDITIONS—Air is required to cut and recut grass clippings in mower housing, so do not set height-of-cut too low or totally surround housing by uncut grass. Always try to have one side of the mower housing free from uncut grass, allowing air to be drawn into housing. When making an initial cut thru center of uncut area, operate unit at a slower ground speed and back up if mower housing starts to clog.

- STOPPING UNIT—If forward motion of unit has to be stopped while cutting, a clump of grass clippings may be deposited on lawn. Follow this procedure for stopping while cutting:

A. With blade engaged, move onto a previously cut area.
B. Raise deck one or two height-of-cut settings while moving unit forward and with deck in operation.
C. Depress clutch and brake pedals, move throttle control lever to SLOW position, disengage mower and rotate ignition key to OFF.

- MOW AT PROPER INTERVALS—Under most normal conditions you'll need to mow approximately every 4-5 days. But remember, grass grows at different rates at different times. This means that in order to maintain the same height-of-cut, which is a good practice, you'll need to cut more frequently in early spring; as the grass growth rate slows in mid summer, cut only every 8-10 days. If you are unable to mow for an extended period due to weather conditions or other reasons, mow first with the height-of-cut at a high level; then mow again 2-3 days later with a lower height setting.

- Alternate mowing direction. This helps disperse clippings over lawn for even fertilization.

- SIDE DISCHARGING OR BAGGING—To side discharge or use bagging attachment, remove the wing nut and hinge pin securing the discharge cover to the mower housing and remove the discharge cover. NEVER REMOVE THE GRASS DEFLECTOR FROM THE MOWER HOUSING. If the complete kit is removed, reinstall the deck baffle (Fig. 3).

# OPERATING INSTRUCTIONS

**WARNING**

**Never remove the grass deflector (Fig. 12) from the mower housing. If the discharge cover under the grass deflector is removed in order to side discharge or bag, the grass deflector routes discharged material down toward the turf. If the deflector is ever damaged, replace it. Without the deflector or complete grass catcher assembly mounted in place, discharged material could cause personal injury or blade contact could occur.**

The Recycler® Kit's special features reduce clipping size, thus decreasing amount of grass to be disposed of and number of times bagger will have to be emptied.

**Note:** When bagger is full, mower will begin to inject clippings down into the grass.

If the lawn appearance is not satisfactory after mowing, try one of the following:

- Sharpen the blade.
- Raise the height-of-cut setting on your mower.
- Cut your grass more frequently.
- Overlap cutting swaths instead of cutting a full swath with each pass.
- Mow across the marginal areas a second time.

## TIPS FOR CUTTING LEAVES

In the fall, you can cut your leaves up into finely cut particles and inject the particles down into the grass. When spring arrives, the leaf particles will have decomposed and restored valuable nutrients to the soil.

- When cutting is complete, always be sure that 50% of the lawn shows through the finely cut leaf cover. This may require one or more passes over the leaves.
- If there are more than five inches of leaves on lawn, raise the deck one or two notches higher. This makes it easier to feed leaves under mower deck.
- If leaves are not cut up finely enough to be hidden down in the grass, make a second pass 90° to the first pass.
- If you cut up a lot of oak leaves, you might want to add lime to your grass in the spring. Lime reduces the acidity of oak leaves.


TORO®