TORO®

OWNERS OPERATING AND PARTS MANUAL



25" PARKLAWN

MODEL NO. 12013

30" PARKLAWN

MODEL NO. 12113

Price 25 cents

To The Toro Owner

This Owner Manual has been especially prepared for your information and guidance in the operation and care of your new Toro mower. Information on care and operation of the engine is contained in a separate manual furnished with the engine.

Properly adjusted, operated and maintained, this Toro mower will respond quickly and easily to every reasonable demand and give years of reliable service.

Toro mowers are manufactured by an organization of mowing machinery specialists for over forty years. Each machine is carefully inspected and tested before leaving the factory. For best performance from your Toro mower, study this manual for regular maintenance procedures.

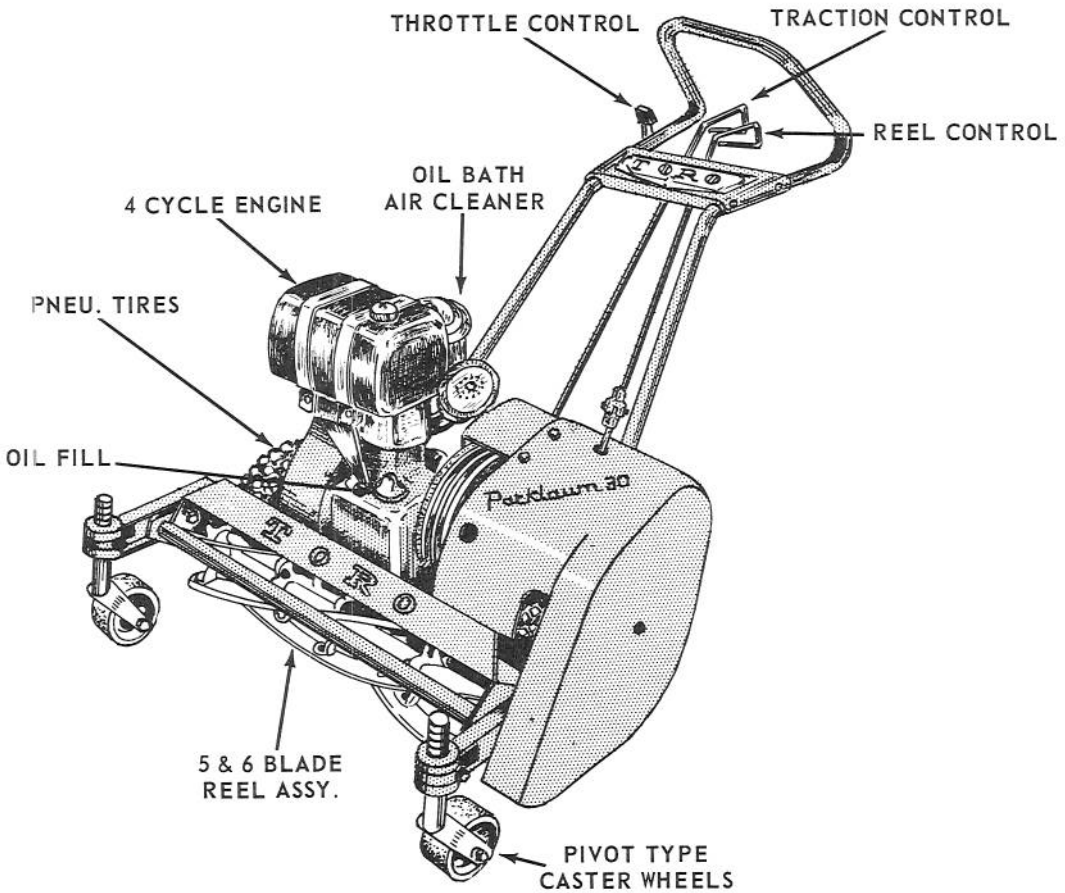

KNOW YOUR MOWER

Warranty

The Manufacturer warrants each new piece of equipment sold to be free of defects in material and workmanship. For one year from the purchase date of consumer line equipment or 45 days if sold for commercial use, Toro Manufacturing Corporation will repair or replace for the original purchaser, free of charge, through any Authorized Service Dealer, any part or parts found at our factory in Minneapolis, Minnesota, to be defective under normal use and service. All institutional equipment is warranted for ninety (90) days from the purchase date.

This Warranty does not obligate the Manufacturer to bear the cost of transportation charges in connection with the replacement or repair of defective parts -- nor shall it apply to a machine upon which repairs or alterations have been made, unless authorized by the manufacturer.

This Warranty does not include nor cover standard accessories produced by other manufacturers. Such accessories have separate warranties by their respective manufacturers . . . and repair or exchange will be made on the basis of such warranties, and the policies authorized by them shall be adhered to.

This Warranty is in lieu of all other warranties expressed or implied.

COPYRIGHT 1962 BY
TORO MANUFACTURING CORPORATION
MINNEAPOLIS 20, MINNESOTA – U.S.A.

LUBRICATION POINTS

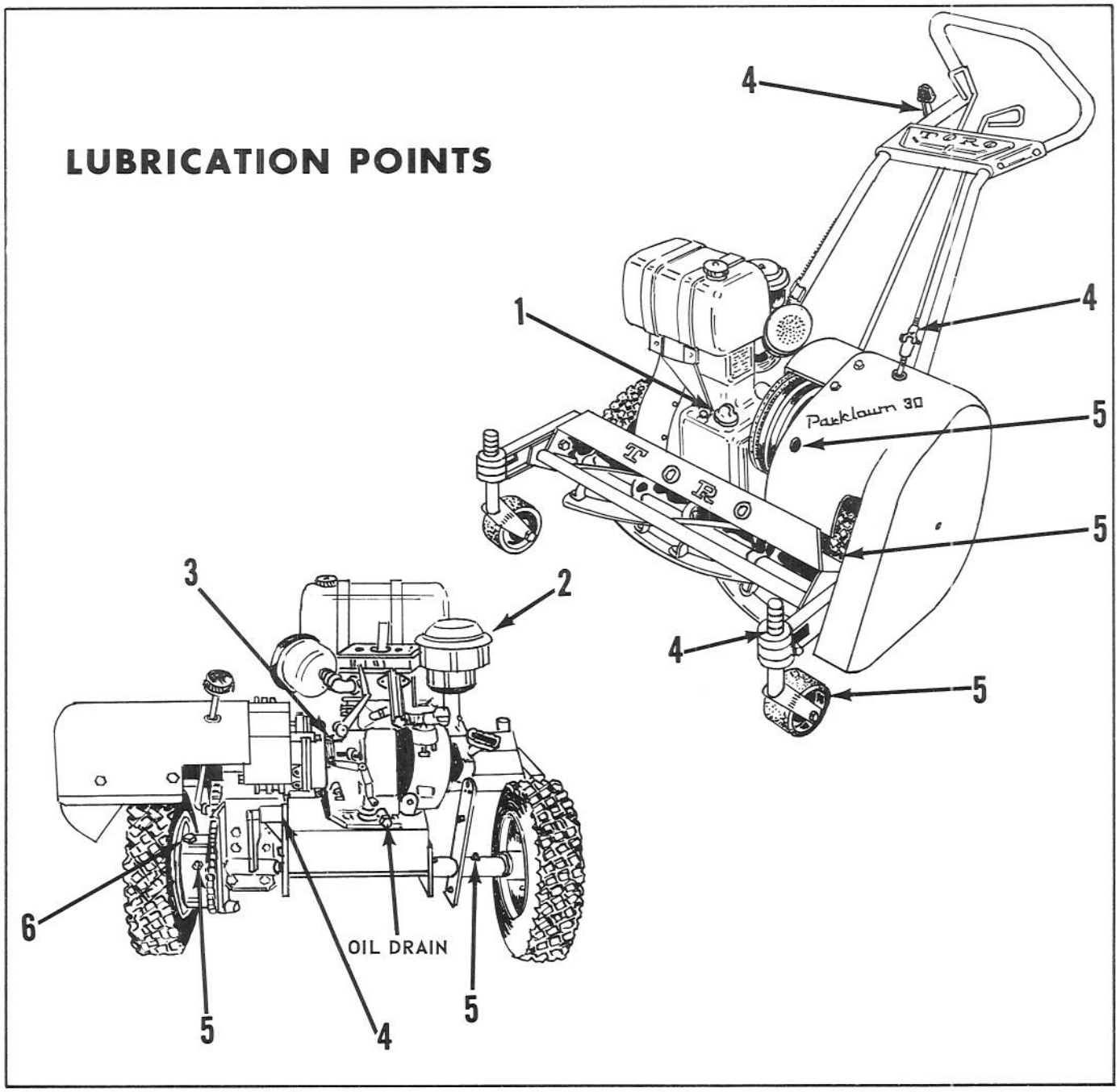

1. ENGINE: USE GOOD GRADE OF S.A.E. 30 MOTOR OIL, CHANGE EVERY 25 OPERATING HOURS, OFTENER UNDER DUSTY CONDITIONS.

2. AIR CLEANER TO LEVEL MARK, USE GOOD GRADE OF S.A.E. 30 MOTOR OIL, CHANGE EVERY 25 OPERATING HOURS, OFTENER UNDER DUSTY CONDITIONS.

3. REDUCTION GEAR CASE, S.A.E. 30 MOTOR OIL, FILL TO LEVEL MARK, USE APPROXIMATELY 2 OZ.

4. WEAR POINTS, LUBRICATING OIL, OIL SPARINGLY.

5. GREASE FITTINGS, TWO ON THE AXLE HOUSING, ONE ON TRACTION COUNTERSHAFT, ONE ON THE WHEEL HUB NEXT TO TRANSMISSION AND ONE ON CASTER WHEELS, LUBRICATING OIL, OIL FREQUENTLY.

6. TRANSMISSION, REPACK WITH GOOD GRADE OF #2 GUN GREASE ONCE A YEAR.

NOTE: The bearings used on the reel and on the power takeoff shaft are factory packed with grease and sealed; they need no additional attention for the life of the bearing.

SPECIFICATIONS

ENGINE: 25" Parklawn - 3.25 H.P. Clinton 494 series recoil - oil bath air cleaner
30" Parklawn - 4.50 H.P. Clinton 498 series recoil - oil bath air cleaner

FUEL TANK CAPACITY: 25" - 5 quarts
30" - 6 quarts

REEL CLUTCH: Tight slack "V" belt

TRACTION CLUTCH: Tight slack "V" belt

REEL DRIVE: "B" section "V" belt from engine P.T.O. shaft 6.1 P.D. and 5.15 P.D. pulley on reel shaft (1.18:1 speed up).

REDUCTION, ENGINE TO REEL:
25" - 5.2:1 reduction including 6:1 reduction in engine
30" - 5.2:1 reduction including 6:1 reduction in engine

REEL: 25" - 6 blades; 30" - 5 blades
8" diameter blades, double riveted to malleable iron spiders $1\frac{1}{8}$" dia. shaft and double seal ball bearings.

BED KNIFE: 25" - ground single edge
30" - ground double edge
Molybdenum alloy steel screwed to the bed bar with stainless steel screws.

BED BAR: 25" - fabricated steel; 30" - cast iron on cylindrical pivots adjusted with opposed stainless steel screws.

TRACTION DRIVE: Forward - "B" section "V" belt from engine on 4.15 P.D. and 5.6 P.D. pulleys (1.35:1 reduction) 1/2" pitch x 5/16" sprocket (4.45:1 reduction)
Reverse: 2 groove cast iron 6.75" P.D. sheaves operating against two 4.38" P.D. asbestos friction discs (1.54:1 reduction)

REDUCTION, ENGINE TO WHEELS:
Forward - 36:1 including 6:1 reduction in the engine
Reverse - 42:1 including 6:1 reduction in the engine

WHEELS: Drive Wheels - steel disc, cast iron hub, oilite bushings
Front Casters - cast aluminum disc, oilite bushings

TIRES: Drive Wheels - 3.5 x 6.00 pneumatics
Front Casters - 4-3/4 O.D. x 2" wide solid rubber tire

DIFFERENTIAL: Enclosed bevel gears

GROUND SPEED: Forward - 2.0 m.p.h. to 3.5 m.p.h.
Reverse - 1.7 m.p.h. to 3.0 m.p.h.

HEIGHT OF CUT: 3/8" to 3 " by raising or lowering the front casters and/or rear axles.

WIDTH OF CUT: 25" and 30"

CLIP: 25" - .89"; 30" - 1.07"

CHASSIS AND SIDE PLATES: Welded flat and tubular steel.

DIMENSIONS:

25" Parklawn	30" Parklawn
Width - 32"	Width - 36"
Length - 54"	Length - 54"
Height - 42"	Height - 42"

WEIGHT: 25" - 235 pounds; 30" - 252 pounds

OPTIONAL EQUIPMENT:
Handle - one piece 1" O.D. x 14 ga. wall, welded steel tubing, plastic handle grips.
Riding Sulky - Frame: welded 1" x 14 ga. steel tubing.
Seat: upholstered pan mounted on flat steel spring mounting.
Wheel: one steel disc caster wheel mounted in fork pivoted on oilite bearing.
Tire: 3.50 x 6.00 pneumatic.
Steering - automatic type linkage actuated by tubular handle bar w/plastic handle grips.
Controls - traction clutch. Reel clutch throttle control, ignition cut-off and engine recoil start all within operator's reach.

HOW TO SET UP THE TORO PARKLAWNS

GENERAL DESCRIPTION

The Toro 25" and 30" Parklawn is a riding or walking, reel-type mower, convenient forward, reverse, and reel drive controls.

This permits maximum maneuverability and control by the operator, and adds to the ease and convenience of the grass cutting operation.

Study the setting-up and operating steps in this manual as well as the engine operation and maintenance instructions in the engine manual before proceeding.

When crated for shipment at the factory, the Parklawn is ready for operation with the exception of assembling the rider frame or walking handle to the mower, and installing throttle control. The following setting-up instructions should be taken:

1. Remove ALL components from shipping crate; be sure to include bag of fittings.
2. Attach rider assembly or install handle assembly to mower unit.
3. Install throttle control.

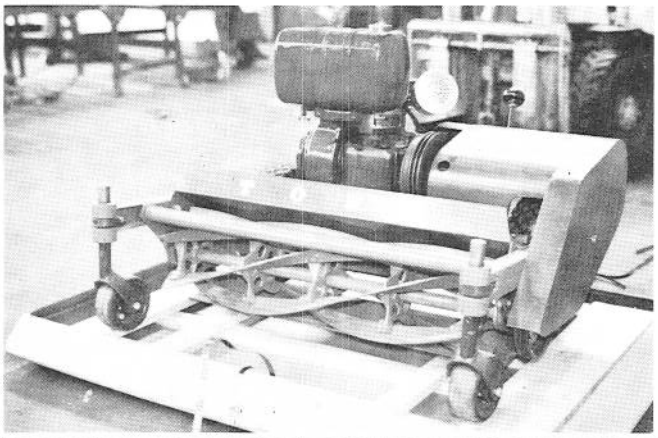

TO SET UP THE PARK LAWN FOR OPERATION FOLLOW THESE INSTALLATION INSTRUCTIONS.

1 REMOVE FROM SHIPPING CRATE AND INSPECT

The Parklawn mowing unit is completely set-up and ready for operation when it leaves the factory. The throttle control wire and casing are attached to the walk type handle or riding sulky. BE SURE THAT THIS CASING IS NOT KINKED OR TWISTED UPON UNPACKING OR DURING INSTALLATION TO THE ENGINE.

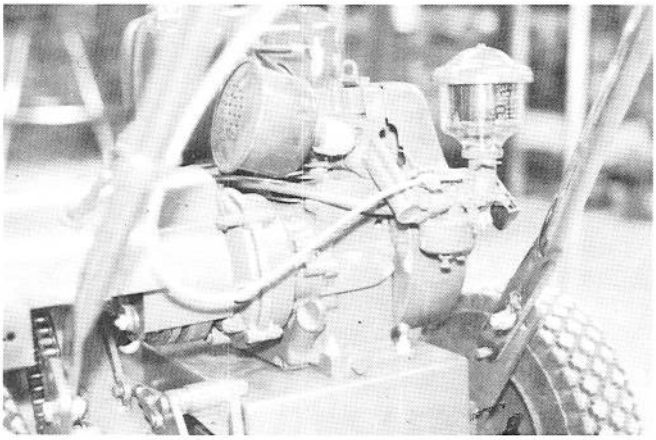

2 INSTALL THROTTLE CONTROL TO THE CARBURETOR ON 25" PARKLAWN

Install throttle control to carburetor and place clip on throttle control cable to lower part of handle as shown in photo at left. For more detailed instructions on hookup to carburetor, see graph on following page.

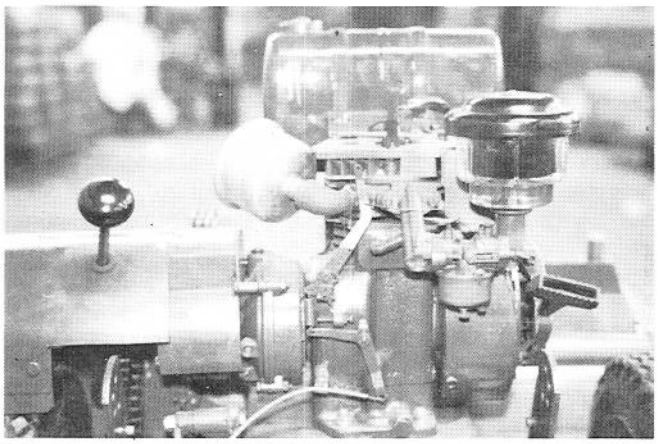

3 INSTALL THROTTLE CONTROL TO THE CARBURETOR ON 30" PARKLAWN

Installation of the throttle control wire to the carburetor on the 30" Parklawn as illustrated in the photo at left is in a different position from the 25". Hookup of this wire is again better shown in the graph on the following page.

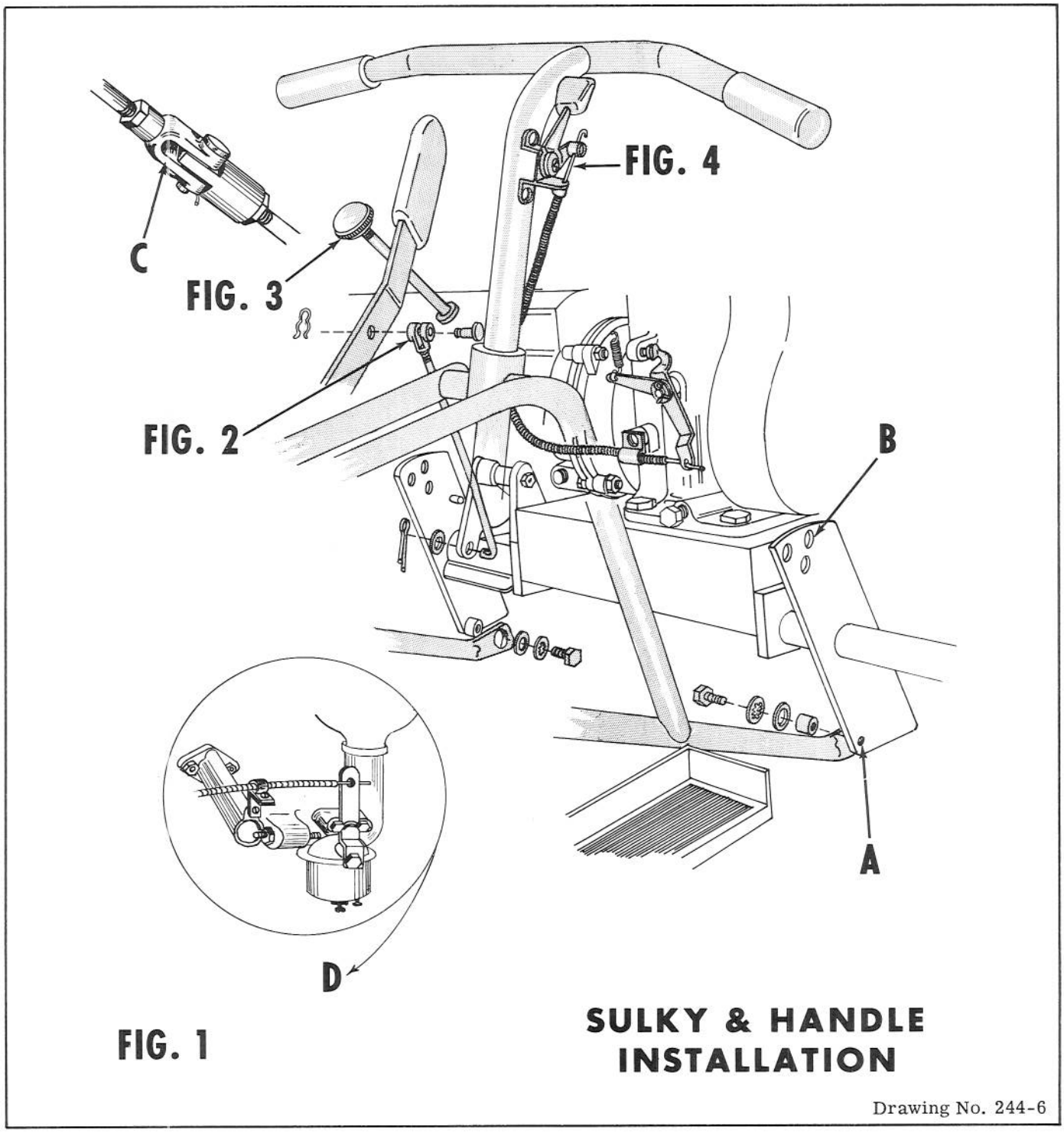

FIG. 1

SULKY & HANDLE INSTALLATION

Drawing No. 244-6

Fig. 1

Install the riding sulky frame in position on the mower by fastening the arms in place at point "A" with fasteners in loose parts bag. CAUTION: Do not overtighten attaching bolts as this will deform nylon bushings. When installing walking type handle, place slotted holes in lower handle on pins on inside of handle brackets. Holes at point "B" are for handle height adjustment.

Fig. 2

Illustration shows proper position of traction control rod to handle and bell crank when riding sulky is used. On walk type handle use longer rod and insert through upper handle and fasten to bell crank in same manner as on the rider hookup.

Fig. 3

Shows reel control rod on 25" and 30" model when used with riding sulky. When walking handle is used, remove control knob and install adapter "C" and long rod to upper handle.

Fig. 4

Shows installation of throttle control to handle and control wire to carburetor on rider frame. Point "D" illustrates proper hookup of throttle wire to carburetor when walk type handle is used.

OPERATING THE TORO PARKLAWN

1 CHECK LUBRICATION, OIL, AND GASOLINE

Before operating the mower for the first time, fill the engine crankcase with a good grade S.A.E. 30 motor oil. Keep engine oil level to full mark. Fill the reduction gear case with S. A. E. 30 motor oil up to the oil level mark, using approximately 2 ounces. Fill the air cleaner to the oil level mark with S.A.E. 30 motor oil. Check to see that all zerk fittings are greased and control casings are oiled. The transmission is packed with No. 2 gun grease at the factory, but should be checked before first operation. REFER TO THE ENGINE MANUAL FOR MORE DETAILED INFORMATION ON ENGINE CARE. Fill the gas tank with a good grade of regular gasoline. Be sure to open fuel valve "A" under tank.

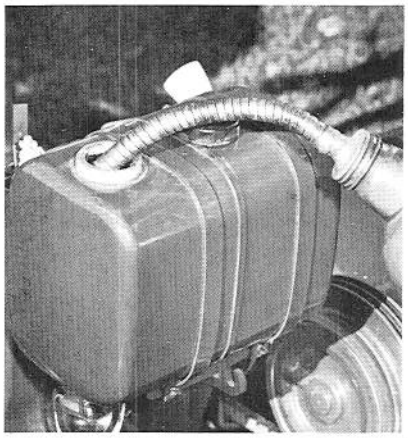

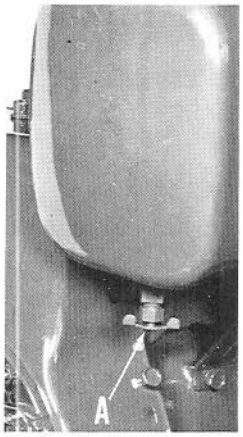

2 PUT TRACTION AND REEL LEVERS IN NEUTRAL

The traction drive and reel drive control levers are located at the driver's left on the riding sulky. Lever "A" in Fig. 1 is the traction control; to move forward, push ahead; to reverse, pull lever full back. Neutral is in the center position. Reel control lever "B" is the shorter lever, has two positions--neutral as shown and in to start reel in motion. Walk type handle controls have same action. See Fig. 2. BE SURE BOTH LEVERS ARE DISENGAGED BEFORE STARTING THE ENGINE.

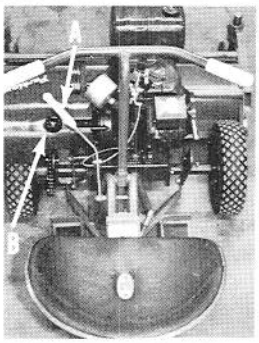

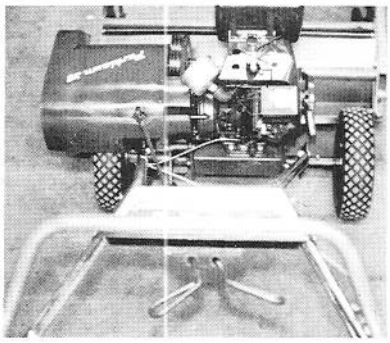

3 START THE ENGINE USING RECOIL STARTER

Open throttle slightly and close choke completely. Crank once to prime. Open choke half way and pull on starter rope. When engine starts, slowly open choke completely. Do not choke if engine is warm. DO NOT CHOKE THE ENGINE REPEATEDLY OR FLOODING OF THE CARBURETOR WILL RESULT. CHECK INSTRUCTIONS IN THE ENGINE MANUAL. Stop the engine with the sparkplug grounding spring.

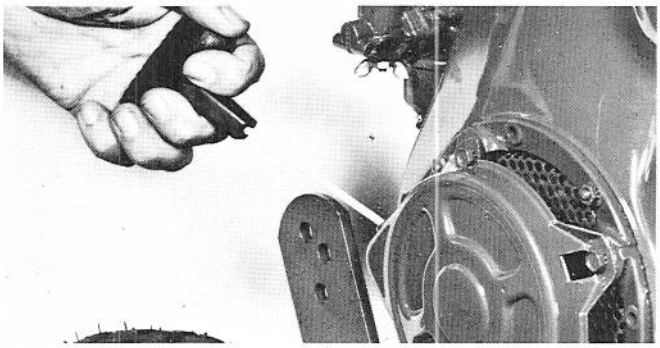

4 OPTIONAL REEL PULLEY

There is an optional reel pulley available (Part #K-46) that will increase the frequency of clip on the mower. V-belt #271-101 must be used.

This optional pulley will change the reel ratio from .89 to .70 on the 25" Parklawn and from 1.07 to .84 on the 30" Parklawn.

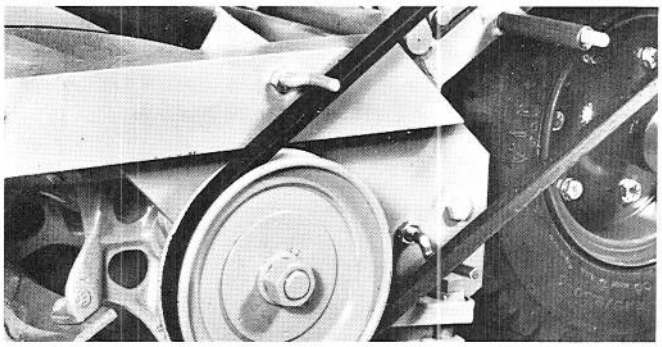

5 SULKY BRACKET

When it is desirous to use the Whirlwind Sulky, it is necessary to install the sulky bracket (optional equipment) in place as illustrated. Position bracket as shown in the holes provided in engine base and secure with screws, lockwashers and nuts.

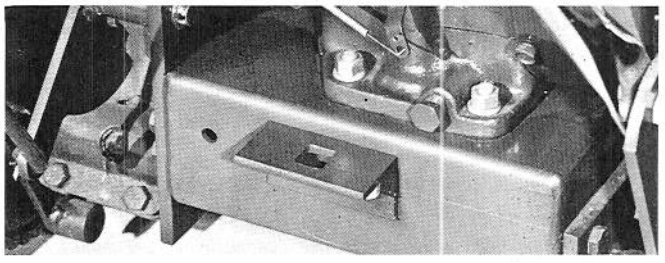

BED KNIFE AND CUTTING HEIGHT ADJUSTMENT

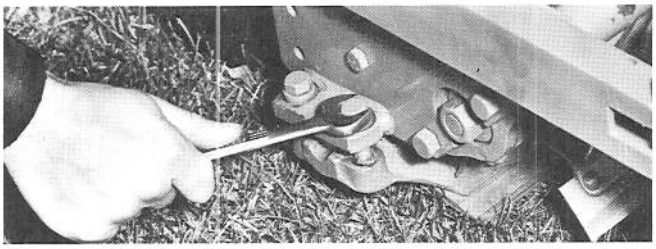

KEEP THE BED KNIFE PROPERLY ADJUSTED

This is the most important adjustment on any reel-type mower and must be done with great care to insure satisfactory performance. On the Parklawns the bed knife is adjusted to the reel blades by means of two adjusting screws at either end of the knife bar. To bring the bed knife up to proper adjustment, take the following steps:

1. Loosen the REAR adjusting screws and tighten the front adjusting screws as shown at both ends of the knife bar.

2. Bring both ends of the bed knife up until the entire knife is close to, but not touching, the revolving reel.

3. Adjust the left end so that it touches very lightly all along the reel.

IN NO CASE SHOULD THE BED KNIFE BEAR HEAVILY AGAINST THE REVOLVING REEL. To do so will cause loss of power, poor cutting and will soon destroy the blades and reel bearings.

The mower, when properly adjusted, will cut clean on all blades for their full length, and the reel will revolve freely.

SEAT ADJUSTMENT

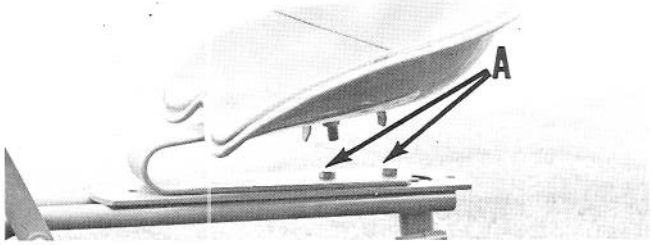

To adjust the seat to the desired position remove screws "A", place seat forward or backward to most comfortable position, and retighten screws.

SIDE HILL MOWING

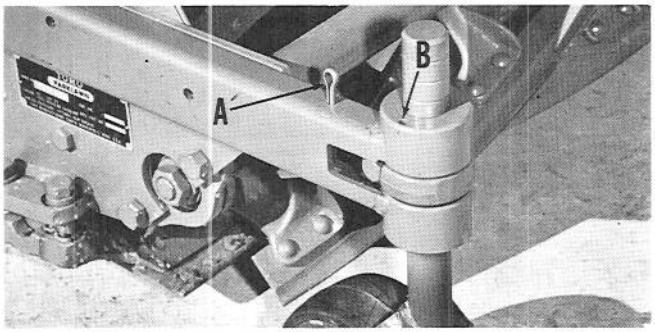

For side hill mowing, front caster wheels can be locked in position as shown in illustration. To do this, remove pin "A" and place pin in hole "B" to lock.

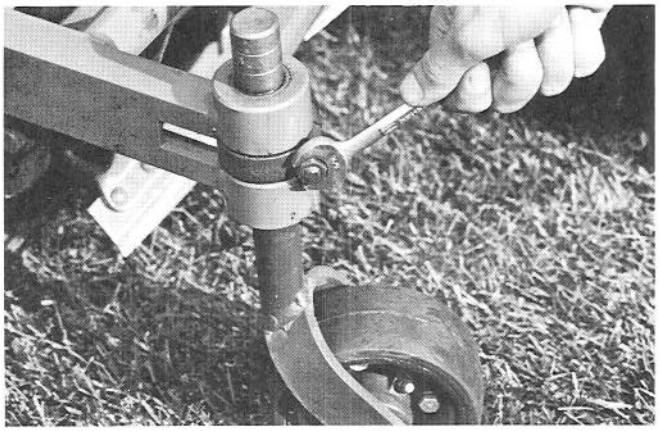

HEIGHT OF CUT

Cutting grass at the proper height for both the type of turf involved and growing conditions is one of the most important features of lawn care. Under most conditions lawns should be clipped at a height of 1 to 1-3/4 inches. Creeping bent grass and fine leaved Bermuda grass make a better lawn cut at 1/2 to 3/4 inch. Lawn grasses should be cut with a frequency that permits clipping off not more than 1/2 inch at a time, preferably as little as 1/4 inch.

Height of cut can be adjusted from 3/8 inch to 3 " inches . This is accomplished by moving the caster fork stems up or down. There are gauge marks on the stems at intervals of 1/2 inch to assist in making the same adjustment for both wheels.

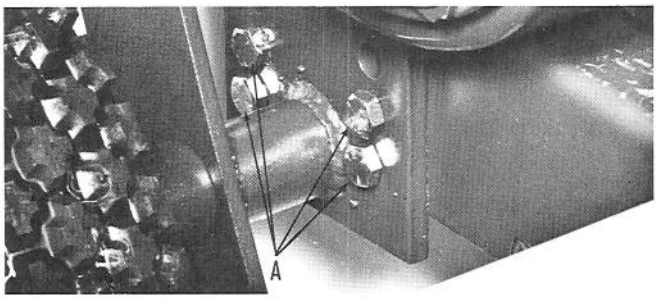

The mower is shipped with the axle set in the normal ($1\frac{1}{4}$" - $2\frac{1}{2}$") height of cut position. For low cuts, 3/8" - $1\frac{1}{4}$", change the engine base attachment to the axle to position "A" as shown.

GRASS SHIELD INSTALLATION

When the grass catcher is used, the grass shield must be installed as shown in photo at right. Place in position as shown and secure with the four self-tapping screws furnished with the grass catcher kit.

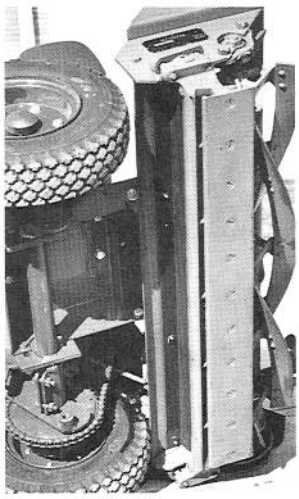

HOW TO KEEP YOUR MOWER PROPERLY ADJUSTED

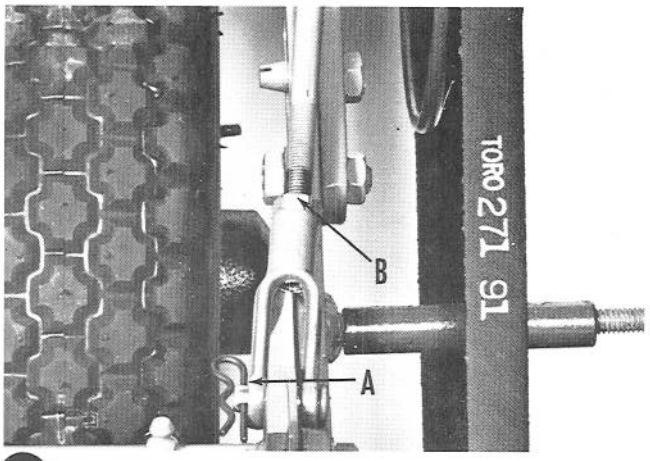

1 ADJUST FOR PROPER TENSION ON REEL BELT

As new belts get worn in, it is necessary to tighten the reel belt adjustment from time to time to prevent excessive wear and poor performance due to slipping.

To tighten the reel belt, first remove the clevis pin "A" from the reel bell crank as shown above. Loosen locknut "B" and unscrew the clevis one or two turns. Then replace the clevis pin and test for adjustment. Adjust as required.

2 REPLACE WORN OR DAMAGED REEL BELTS

To replace the reel belt, release tension on the reel control lever and remove the belt from pulleys. If necessary, remove clevis pin and loosen clevis as in adjustment instructions above to permit fitting the new belt. Be sure the reel belt is installed between the belt guards.

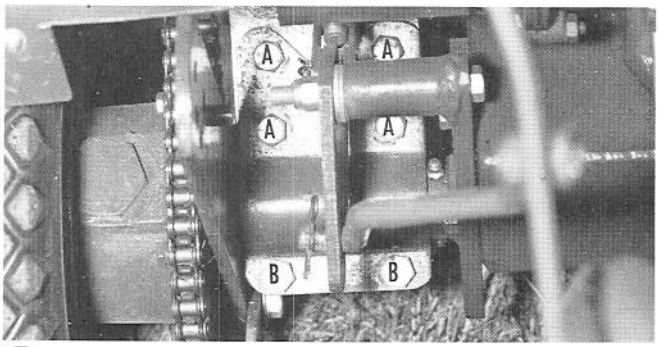

3 KEEP TRACTION CHAIN ADJUSTED PROPERLY

Adjust the traction chain after wear as follows: Loosen the four bolts "A" and nuts, which hold the countershaft housing clamp to the countershaft housing as shown above. These bolts go through slotted holes in the housing, and after they are loosened the housing can be pried away from the axle housing until chain is tight. BE SURE TO ALIGN BOLTS AND HOUSING AFTER ADJUSTING AND TO ALIGN THE REVERSE TRACTION PULLEYS BEFORE TIGHTENING BOLTS.

4 ADJUST FOR NEUTRAL POSITION

The neutral position of the traction drive belt is held by friction of the countershaft housing clamp on the countershaft. If the drive will not stay in neutral, adjust the two bolts "B" to give a firm hold position.

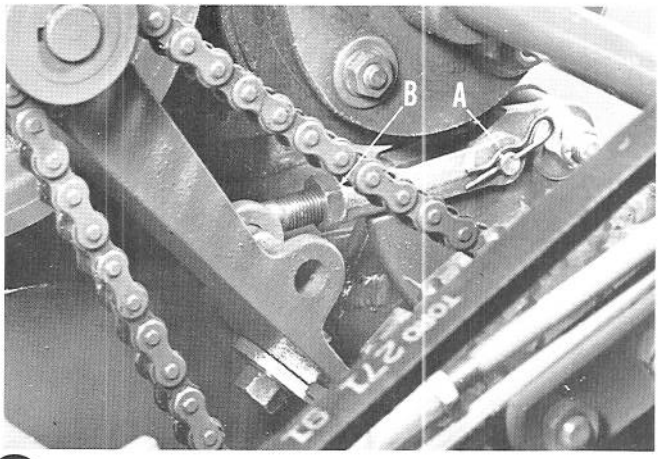

5 MAINTAIN TENSION ON THE TRACTION BELT

Proper adjustment of the traction control lever linkage to the traction drive belt is accomplished by first removing the clevis pin from the clevis located at point "A". This connects to the traction control lever bell crank and can be adjusted by first loosening the lock nut "B" on the shaft in front of clevis and then screwing the clevis in or out, one or two turns, depending on the amount of slack taken up in the traction V-belt.

After adjustment, replace the clevis pin and test for proper belt tension. Adjustment from time to time after initial use becomes necessary as slack accumulates in the traction drive V-belt.

CHECK TO BE SURE THAT TRACTION PULLEYS ARE PROPERLY ALIGNED AFTER ADJUSTMENT AND THAT V-BELT IS INSIDE BELT GUARDS. DO NOT KEEP BELT TOO TIGHT AS THIS WILL CAUSE EXCESSIVE BELT AND BEARING WEAR.

TIRES

Check air pressure at least once each week. Low pressure will damage tires in a short time. Air pressure should be maintained at 15 to 18 pounds at all times. When remounting a tire after maintenance, it should be pumped to 70 pounds pressure, then reduced to correct pressure. This will force the bead of the tire out on the rim preventing tire from slipping on the rim.

CAUTION!

DO NOT ATTEMPT TO WORK ON CUTTING UNIT WHILE ENGINE IS RUNNING.



WHEN THERE IS NEED TO TRANSPORT MOWER BY MOTOR VEHICLE, WE RECOMMEND DRAINING OF ALL GASOLINE AND OIL FROM THE MOWER ENGINE TO ELIMINATE FIRE HAZARD OR POSSIBILITY OF SPILLAGE.

MAIN FRAME & REEL ASSEMBLY

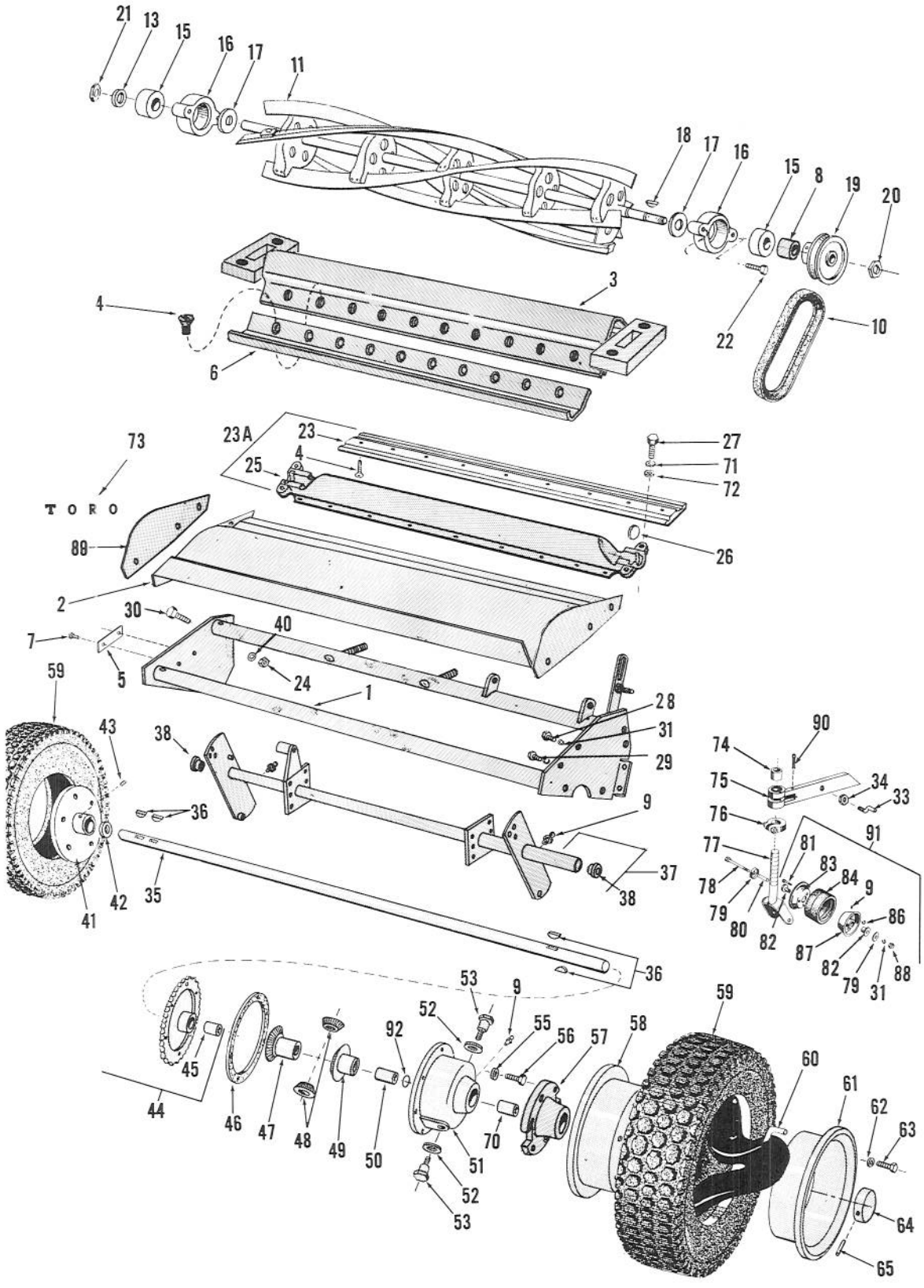

Drawing No. 244-10

MAIN FRAME & REEL ASSEMBLY PARTS LIST

Ref. No.	Part No.	Description	No. Used
1	3-5880	Frame - Mower (25")	1
1	3-5940	Frame - Mower (30")	1
2	3-6080	Grass Shield (25")	1
2	3-6090	Grass Shield (30")	1
3	3-6210	Bed Bar (25")	1
4	CU-110B	Screw, Bed Knife (30")	11
4	CU-110B	Screw, Bed Knife (25")	10
5	Z-37-22	Serial Plate	1
6	3-4362	Bed Knife (25")	1
7	3290-56	Pop Rivet	2
8	3-4291	Spacer	1
‡9	302-5	Grease Fitting	5
10	271-91	V-belt	1
*	271-101	V-belt	1
11	3-5960	Reel Assembly (25")	1
11	3-6890	Reel Assembly (30")	1
13	3256-28	Washer	1
15	251-13	Bearing	2
16	K-207	Bearing Housing	2
17	5P-18	Slinger, Reel Bearing	2
18	3257-3	Key, Woodruff	1
19	3-2961	Pulley	1
*	K-46	Pulley	1
20	3219-6	Jam Nut	1
21	3220-6	Nut	1
22	K-208	Screw	4
23	3-4782	Bed Knife (30")	1
24	3217-7	Nut	6
25	RG-75C	Bed Bar (30")	1
26	RG-76A	Pivot, Knife Bar	2
27	M-68	Screw, Adjusting	4
28	3274-27	Soc. Hd. Capscrew	2
29	323-4	Capscrew	2
30	323-5	Capscrew	6
31	3253-5	Lockwasher	6
33	3-4356	Bolt, Belt Ret. - Short	1
33	3-4357	Bolt, Belt Ret. - Long	1
34	3220-2	Jam Nut	2
35	3-4253	Axle (25")	1
35	3-4254	Axle (30")	1
36	3257-4	Key, Woodruff	4
37	3-6000	Axle Hsg. w/Bushings (25")	1
37	3-6010	Axle Hsg. w/Bushings (30")	1
38	K-31	Bushing	2
40	3254-6	Washer S. P.	6
41	K-38	Wheel Hub, Right	1
42	PM-348	Washer	1

Ref. No.	Part No.	Description	No. Used
43	3246-4	Setscrew	1
44	KK-46	Sprocket, Diff. w/Bushing	1
45	JT-766	Bushing	1
+46	3P-11	Gasket	1
47	K-35	Gear, Diff. Side, Rt.	1
48	K-86	Pinion, Diff.	2
49	K-36	Gear, Diff. Side	1
50	PS-220	Bushing	1
51	K-85	Differential Case	1
52	3P-10A	Lockwasher	2
53	3P-9A	Spindle, Diff. Pinion	2
55	3253-3	Lockwasher	6
56	321-4	Screw	6
57	2-4349	Wheel Hub, Left	1
58	Q-372-2	Wheel Disc	2
59	231-17	Tire, 3.50 x 6	2
*	234-11	Tire, Semi-pneumatic	2
60	232-8	Tube, 3.50 x 6	2
61	Q-372-1	Wheel Disc	2
62	3254-2	Washer	12
63	322-3	Screw	12
64	3-1158	Hub Cap	2
65	32121-32	Roll Pin	2
70	PM-349	Bushing	1
71	PL-135	Upper Washer	4
72	LU-91	Lower Washer	4
73	3-4094	Decal	1
74	256-46	Bushing	4
75	2-4089	Caster Brkt., Left	1
75	2-4099	Caster Brkt., Right	1
76	PK-43	Clamp Assembly	2
77	PK-42	Caster Wheel Fork	2
78	3211-15	Screw	2
79	PL-111	Slinger	4
80	PK-40	Sleeve	2
‡81	329-4	Screw	10
‡82	256-34	Bushing	4
‡83	PK-48A-2	Wheel Disc	2
‡84	PK-47	Tire	2
‡86	3253-3	Lockwasher	10
‡87	PK-48A-1	Wheel Disc	2
88	3220-3	Nut, Jam	2
89	3-5006	Shim, 14 gauge	0-1
*	3-5007	Shim, 16 gauge	0-1
90	3272-24	Cotter Pin	2
91	PKK-160	Caster Wheel Assembly	2
92	237-24	"O" Ring	1

* Accessory Item, Not Illustrated

\+ For repair, be sure to note number of gaskets used -- replace with same amount when re-assembling.

‡ Included in Caster Wheel Assembly, Ref. No. 91

INSIST ON GENUINE TORO PARTS

ENGINE & CONTROLS ASSEMBLY

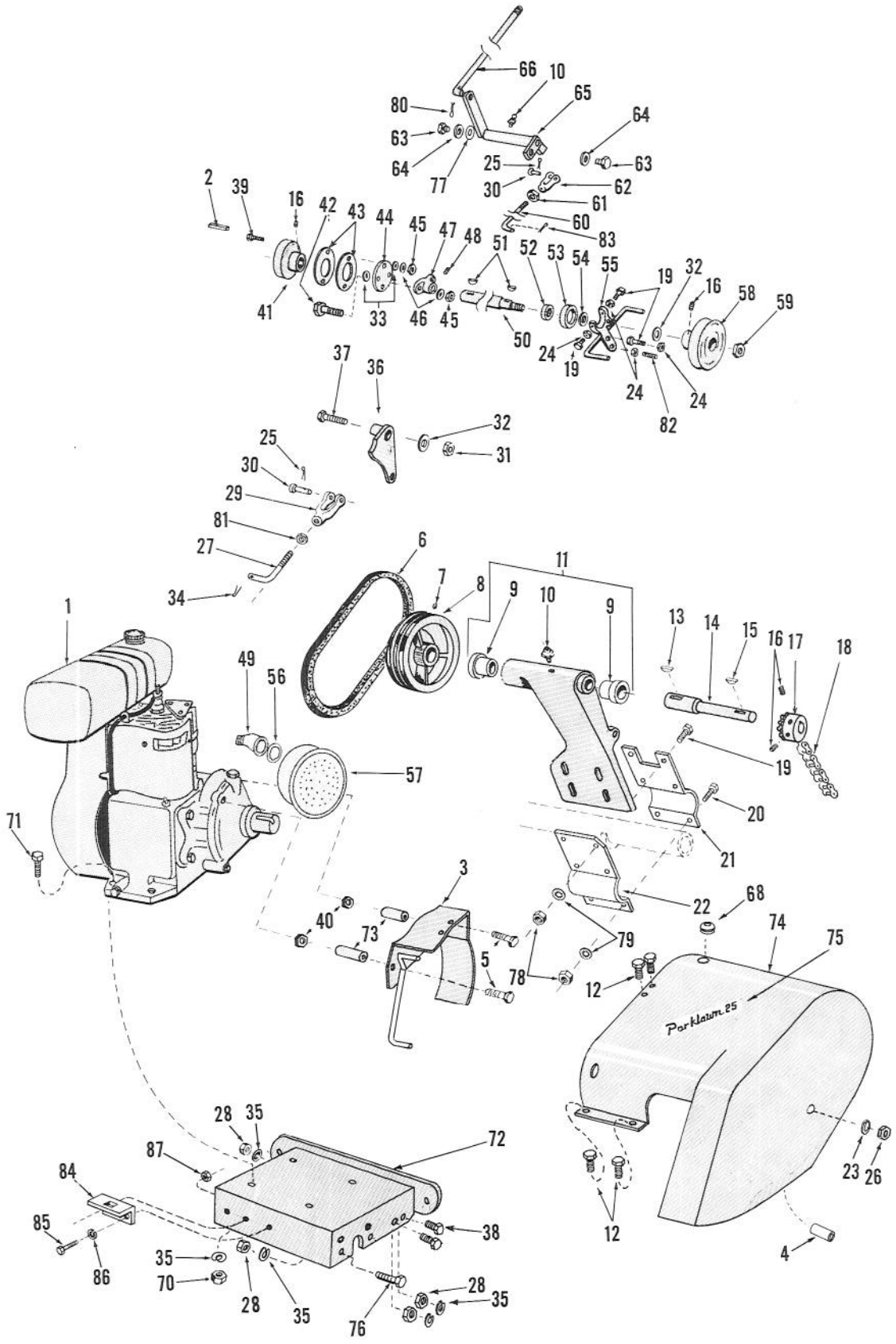

Drawing No. 244-12

ENGINE & CONTROLS ASSEMBLY PARTS LIST

Ref. No.	Part No.	Description	No. Used
1	221-208	Engine (25")	1
1	221-209	Engine (30")	1
2	3-4771	Key	1
3	3-6310	Belt Guard	1
4	3-4288	Spacer	1
5	329-10	Screw	2
6	3-4733	V-Belt	1
7	3246-2	Setscrew	2
8	3-4372	Pulley	1
9	256-34	Bushing	2
10	302-5	Grease Fitting	2
11	2-4389	Housing, Cntrshft. & Bushings	1
12	32140-31	Screw	4
13	3257-5	Key, Woodruff	1
14	3-4251	Countershaft	1
15	3257-3	Key, Woodruff	1
16	3246-4	Setscrew	3
17	K-53	Sprocket	1
18	3-4734	Chain	1
19	3211-4	Screw	4
20	3211-5	Screw	2
21	K-181	Clamp, Upper, Cntrshft. Hsg.	1
22	K-182	Clamp, Lower, Cntrshft. Hsg.	1
23	3253-4	Lockwasher	1
24	3220-3	Jam Nut	4
25	3290-250	Hairpin Cotter	1
26	3217-6	Nut	1
27	3-4406	Release Link	1
28	3217-7	Nut	14
29	282-7	Clevis	1
30	283-1	Clevis Pin	1
31	3296-6	Stop Nut	1
32	3256-4	Cut Washer	2
33	3256-3	Cut Washer	8
34	3272-10	Cotter Pin	1
35	3253-5	Lockwasher	14
36	3-7830	Bellcrank	1
37	3-5038	Screw	1
38	323-6	Screw	4
39	322-13	Screw	2
40	3296-3	Nut	2
41	3-4348	Pulley	1
42	322-4	Screw	2
43	3-1562	Driving Disc	2
44	KP-54	Disc, Coupling	1
45	3218-2	Nut, Jam	4
46	3254-2	Washer, Shakeproof	4

* Not Illustrated

Ref. No.	Part No.	Description	No. Used
47	K-49	Coupler	1
48	3246-3	Setscrew	2
49	2811-9	Elbow, Muffler	1
50	3-4252	Shaft	1
51	3257-5	Key, Woodruff	2
52	251-7	Bearing	1
53	K-50	Cup, Bearing	1
54	PM-348	Washer	1
55	3-5970	Bearing Bracket	1
56	3290-153	Locknut, Conduit	1
57	2212-8	Muffler	1
58	3-2945	Pulley	1
59	3220-6	Nut, Jam	1
60	3-4342	Adjusting Link	1
61	3220-2	Nut, Jam	1
62	282-2	Clevis	1
63	K-63	Screw, Pivot	2
64	3254-4	Lockwasher, Shakeproof	2
65	3-6200	Bellcrank	1
66	3-4343	Control Rod, Reel	1
68	3-4408	Grommet	1
69	3253-5	Lockwasher (25")	4
69	3253-5	Lockwasher (30")	4
70	3219-3	Nut (25")	4
70	3219-3	Nut (30")	4
71	3211-5	Capscrew, Engine Base, Front (25")	2
71	3211-5	Capscrew, Engine Base, Rear (25")	2
71	3211-5	Screw, Engine Base (30")	4
72	3-5950	Engine Base	1
73	3-2074	Spacer	2
74	3-6300	Shroud	1
75	3-4092	Decal (25")	1
*	3-4093	Decal (30")	1
76	323-6	Screw	8
77	3290-211	Spring Washer	2
78	3219-3	Nut	6
79	3254-6	Washer, Shakeproof	6
80	3272-6	Cotter Pin	1
81	3220-4	Nut, Jam	1
82	K-44A	Guide Pin	1
83	3272-5	Cotter Pin	1
+84	3-5658	Angle	1
+85	322-3	Capscrew	2
+86	3253-4	Lockwasher	2
+87	3217-6	Nut	2

+ Optional Equipment

IMPORTANT ORDERING INSTRUCTIONS

To insure getting correct parts without delay, please furnish the following information:

1. Serial number of your mower as shown on the name plate.
2. Part number, description and quantity of each part required.
3. State whether parts should be shipped by mail or express. All repair parts are shipped F. O. B. factory.
4. Name and address where parts are to be shipped.
5. Do not order by reference number; use part number only.
6. Repair parts are available from your Toro distributor or dealer.

SULKY ASSEMBLY

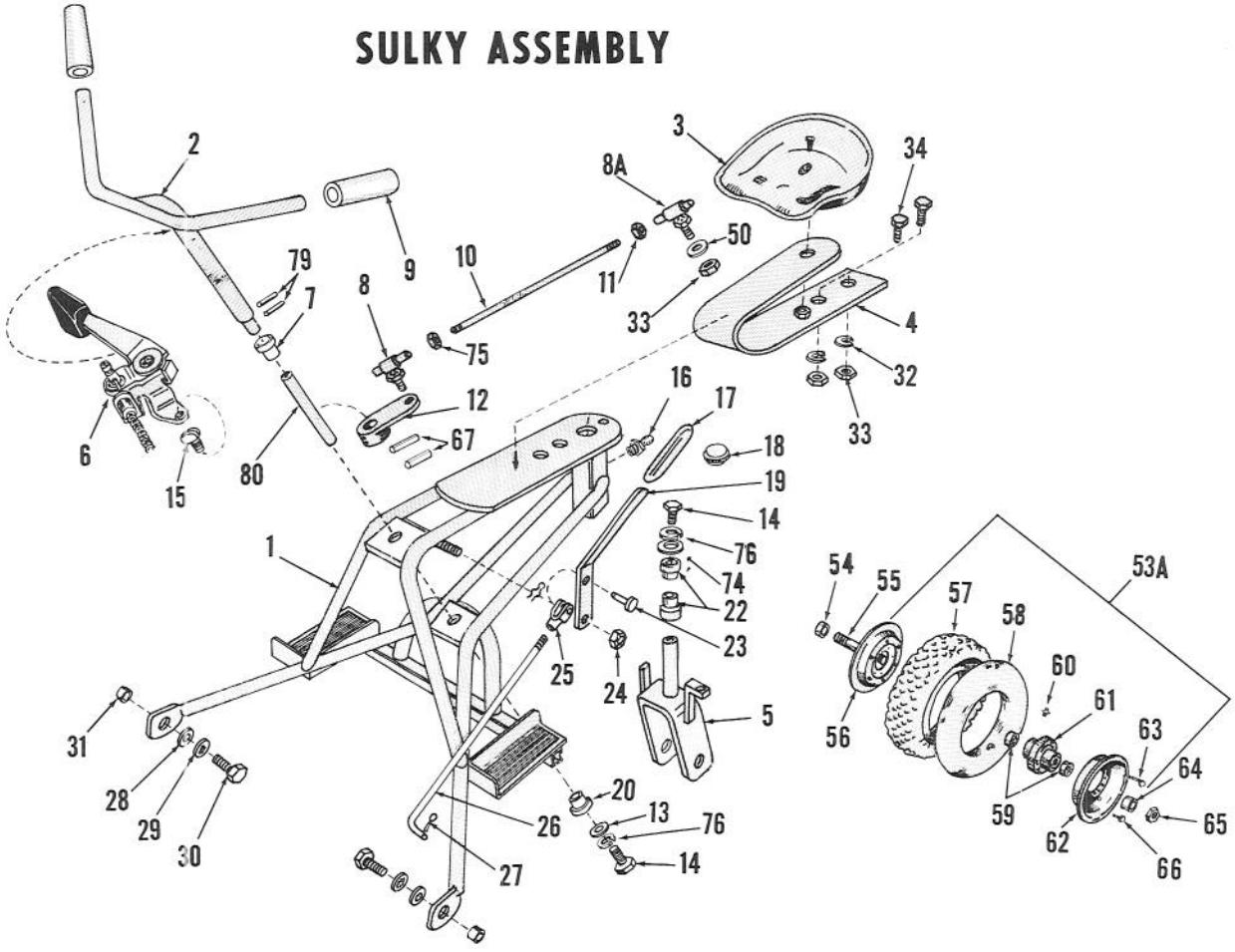

HANDLE ASSEMBLY

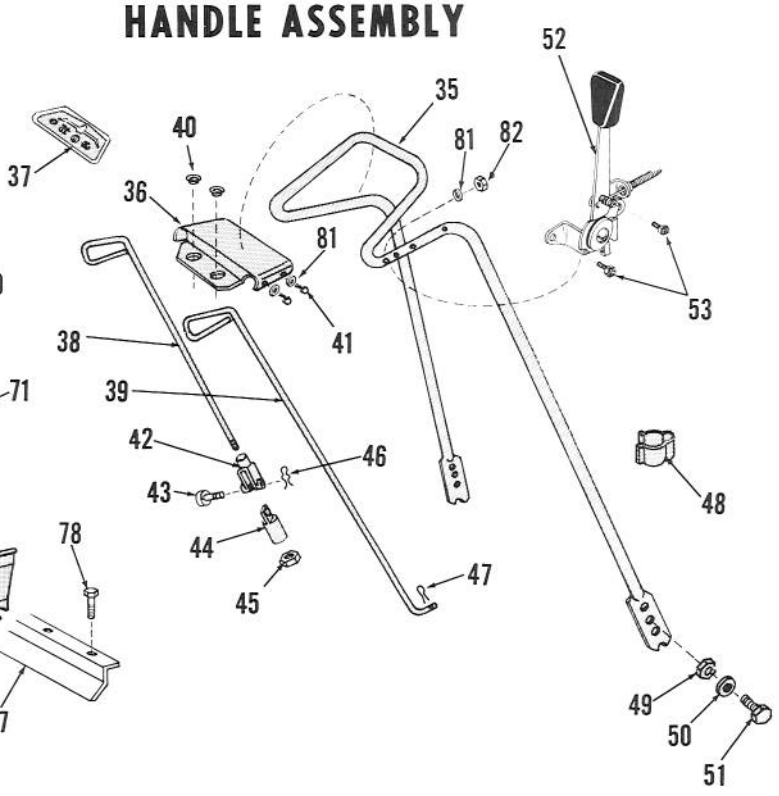

GRASS CATCHER

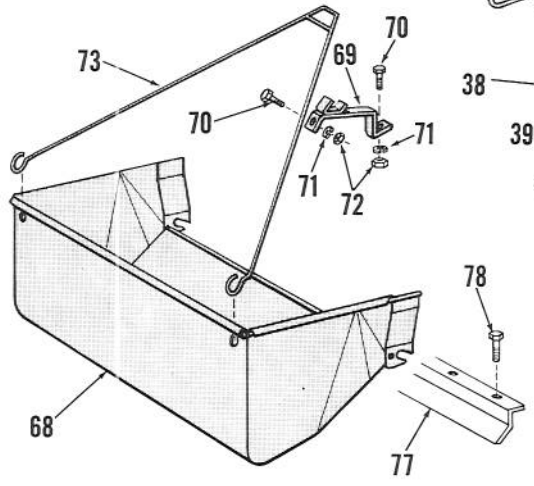

Drawing No. 244-14

SULKY, HANDLE & GRASS CATCHER ASSEMBLY PARTS LIST

Ref. No.	Part No.	Description	No. Used
1	3-6150	Frame with Bushings	1
2	3-8400	Handle Bar	1
3	351-3	Seat Assy. w/Nut & Bolt	1
4	3-1871	Seat Spring	1
5	3-6140	Fork	1
6	3-4391	Throttle Control, Sulky	1
7	256-117	Bushing, Upper	1
8A	2411-5	Ball End, Right Hand Thread	1
8	2411-9	Ball End, Left Hand Thread	1
9	3-4991	Handle Grip	2
10	3-4634	Linkage Rod	1
11	3220-3	Nut, Jam	1
12	3-4365	Pivot	1
13	4-8620	Washer	1
14	329-2	Screw	2
15	3251-1	Screw	2
16	302-5	Grease Fitting	1
17	3-4988	Handle Grip	1
18	233-10	Knob	1
19	3-6130	Handle, Traction Control	1
20	256-104	Bushing, Lower	1
22	256-132	Bushing, Fork	2
23	283-1	Clevis Pin	1
24	3296-28	Nut, Stop	1
25	282-7	Clevis	1
26	3-4633	Control Rod	1
27	3272-6	Cotter Pin	2
28	3256-5	Cut Washer	2
29	3253-6	Lockwasher	2
30	3212-2	Screw	2
31	3-4304	Spacer	2
32	3253-5	Lockwasher	2
33	3219-3	Nut, Hex	4
34	3211-4	Screw	2
*	3-4635	Shield	1
*	321-2	Screw	2
*	3290-158	Nut, Keps	2
35	2-5709	Handle with Grip	1
36	3-6230	Escutcheon Plate	1
37	3-4331	Decal	1
38	3-4358	Control Rod, Reel	1
39	3-4361	Control Rod, Traction	1
40	3-4408	Grommet	2
41	32104-70	Screw	4

* Not Illustrated

Ref. No.	Part No.	Description	No. Used
42	282-1	Clevis	1
43	283-2	Clevis Pin	1
44	3-4344	Connecting Link	1
45	3219-3	Nut, Jam	1
46	3272-6	Cotter Pin	1
47	3272-10	Cotter Pin	1
48	3-2556	Clip	2
49	3217-7	Nut	2
50	3253-5	Lockwasher	4
51	323-6	Screw	2
52	3-4387	Throttle Control, Handle	1
53	32122-29	Screw	2
53A	241-54	Wheel Assembly	1
54	3-5142	Spacer	1
55	3-5037	Axle	1
56	241-31	Disc less Valve Hole	1
57	231-17	Tire	1
58	232-8	Tube	1
59	251-34	Bearing	2
60	302-11	Grease Fitting	1
61	242-13	Hub	1
62	241-36	Disc with Valve Hole	1
63	321-8	Screw	6
64	3-4354	Spacer	1
65	3296-15	Nut, Stop	1
66	323-4	Screw	6
67	32121-12	Roll Pin	2
+68	76110	Grass Catcher W. A. (25")	1
+68	76111	Grass Catcher W. A. (30")	1
+69	3-6950	Bracket W. A.	1
+70	329-3	Capscrew	2
+71	3253-3	Lockwasher	2
+72	3219-1	Nut	2
+73	PL-281-A	Bail	1
74	4-2320	Washer	1
75	3-5781	Nut, Jam, L. H.	1
76	3254-8	Lockwasher S. P.	2
+77	3-6100	Grass Shield, Lower (25")	1
+77	3-6110	Grass Shield, Lower (30")	1
+78	32140-31	Screw	4
79	32121-30	Roll Pin	2
80	3-4293	Shaft	1
81	3255-5	Washer S. P.	4
82	3219-4	Nut	2

+ Optional Equipment

RECOIL STARTER

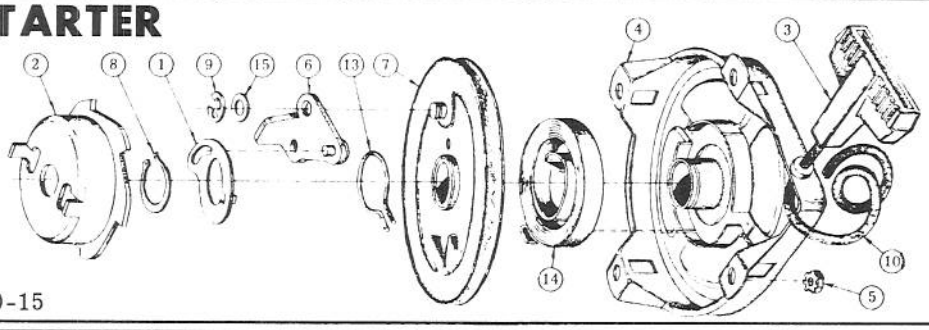

Drawing No. 8100-15

Ref. No.	Description	Old No.	IBM No.	Qty.
1	Actuator	P90873	157-2	1
2	+Cup Starter	P90871	265-10	1
3	Handle	P90160	121-6	1
4	Hsg., Incl. Recoil Spr.	P90844-B	124-6-5	1
5	+Nut & L'washer Assy.	4107-A	183-25-5	4
6	Pawl & Pin Assy.	P90868-A	157-129-5	1
7	Pulley Assembly	P90919	219-28-5	1

+ Indicates parts not included with Recoil Assembly

Ref. No.	Description	Old No.	IBM No.	Qty.
8	Ring Retaining	401859	232-66	1
9	Ring Retaining	P90928	232-35	1
10	Rope	P90361	246-7	1
*11	+Screen	90872	257-30	1
14	Spring, Recoil	P90864	263-79	1
15	Washer	5983	304-320	1

* Not Illustrated

Part Nos. listed for identification only - To obtain parts, contact your local Clinton dealer.

ENGINE #494-1161-099 (25" Parklawn)

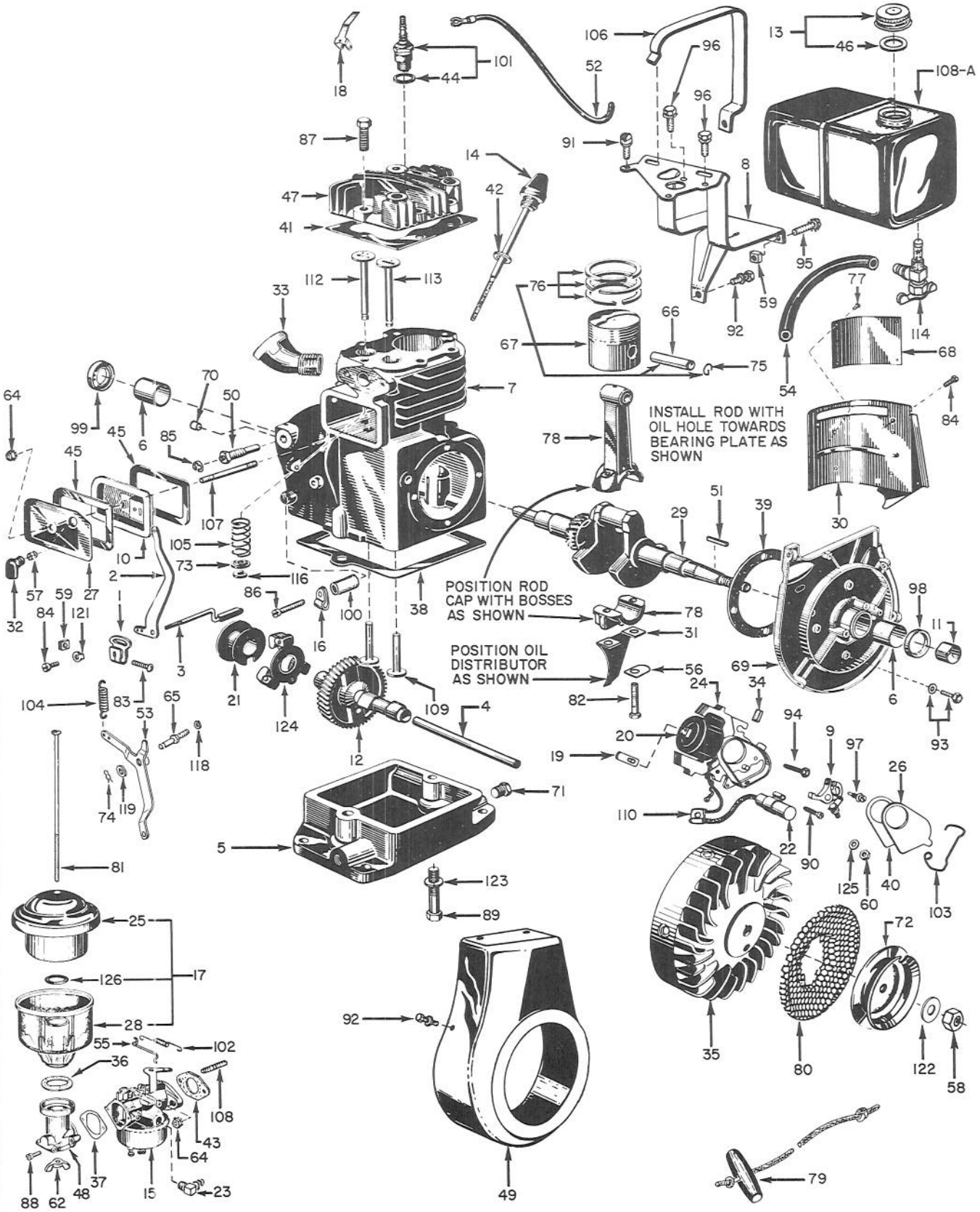

Drawing No. 244-16

ENGINE #494-1161-099 PARTS LIST

Ref. No.	Part No.	Description	No. Used
1	90505	Arm-Governor Adjusting	1
2	157-393	Arm-Governor Throttle	1
3	92188-A	Arm & Weight Assy., Gov'nor	1
4	3593-A	Axle-Camshaft	1
5	5040	Base-Engine	1
6	10016	Bearing-Main (1-Bearing Plate, 1-Block)	2
7	9220	Block Assembly-Cylinder	1
8	12059	Bracket-Fuel Tank Mounting	1
9	5735	Breaker Points Assy. - Magneto	1
10	29-35-5	Breather Assembly	1
11	5750	Cam-Breaker Points	1
12	12008	Camshaft	1
13	3059-A	Cap & Gasket Assy. -Fuel	1
14	3295	Cap-Oil Filler	1
15	14370	Carburetor Assembly	1
16	90272	Clamp-Remote Control Cable	1
17	2-165-5	Cleaner Assembly-Air	1
18	3499	Clip-Ignition Shorting	1
19	5734	Clip-Coil Holding	1
20	5770	Coil-Magneto (Without Laminations)	1
21	3063-1	Collar Assembly-Governor	1
22	5589-A	Condenser-Magneto	1
23	5052	Connector-90° Flexible Fuel Line	1
24	5732	Core & Breaker Box Assy.	1
25	45-393	Cover & Element	1
26	5743	Cover-Dust, Magneto Breaker Points	1
27	7938	Cover-Valve Chamber	1
28	4513	Cup-Air Cleaner	1
29	6049-1	Crankshaft	1
30	12006	Deflector-Air	1
31	4007	Distributor-Oil	1
32	90610	Elbow-Breather	1
33	7274	Elbow-Muffler	1
34	5742	Felt-Lubrication, Cam Follower	1
35	5754-A	Flywheel Assy. -With Magnets	1
36	10259	Gasket-Air Cleaner to Air Horn	1
37	31445	Gasket-Air Horn to Carb.	1
38	4465-1	Gasket-Engine Base to Block	1
39	3056	Gasket-Bearing Plate (Standard, .015 thick) NOTE: Gaskets may also be in the following thicknesses: .005, .010, and .020. Order by Part Number and specify thickness.	1
40	5744	Gasket-Breaker Points Cover	1
41	6141	Gasket-Cylinder Head	1
42	3297	Gasket-Dipstick Assembly	1
43	6002	Gasket-Asbestos (Carburetor to Block)	1
44	3115	Gasket-Spark Plug	1
45	3057	Gasket-Valve Chamber Cover	2
46	3113	Gasket-Fuel Tank Cap	1
	91563	Gasket Kit-Engine Overhaul NOTE: Kit contains all necessary Gaskets and Oil Seals.	1
47	6140	Head-Cylinder	1
48	6453	Horn-Air	1
49	90331-B	Housing-Blower	1
50	12310	Housing Assembly-Governor Shaft Bearing	1
51	10339	Key-Flywheel	1
52	90761	Lead-High Tension Magneto	1
53	157-406-5	Lever Assy. -Speed Adjusting	1
54	6316	Line-Fuel Flexible	1
55	7920	Link-Carburetor to Governor Arm	1
56	3027	Lock-Connecting Rod Screw	2
	91740	Magneto Assembly (Ref. Nos. 9, 20, 19, 22, 24, 26, 34, 40, 60, 90, 94, 97, 103, 110.)	1
57	10353	Mandrel-Breather Elbow	1
58	5942	Nut-Hexagon, (Starter Pulley)	1
59	3253	Nut-Square, (1-Governor Adjusting Arm) (2-Tank Straps)	3
60	5740	Nut-Terminal Condenser Lead	1
*	4425	Nut-Muffler Lock	1
62	7044	Nut-Wing (Air Cleaner Screw)	1
*	4107-A	Nut & L'Washer-Throttle Stop Screw	1
64	3255-A	Nut & L'Washer Assy. -Hex. (1-Valve Cover Stud)(2-Carb. to Block).	3
65	203-208	Pin-Pivot	1
66	6024	Pin-Wrist	1
67	31001-A	Piston Assembly-Standard NOTE: Piston Assemblies are available in the following oversizes: .010, .020, .030. Order by Part Number and specify oversize.	1
68	6530	Plate-Name	1
69	12016-A	Plate-Bearing	1
70	3281	Plug-Camshaft Axle	1
71	3289	Plug-Oil Drain	2
72	12398	Pulley-Starter	1
73	3028	Retainer-Valve Spring	2
74	5857	Ring-Retainer (Speed Adjusting Lever)	1
75	6034	Ring-Retainer (Wrist Pin)	2
76	10023	Ring Set-Standard NOTE: Ring Sets are also available in the following oversizes: .010, .020, .030. Order by Part Number and specify oversize.	1
77	5460	Rivet-Tubular, Name Plate	4
78	6107	Rod Assembly-Connecting (Ref. Nos. 56 & 82)	1
79	4266	Rope Assembly-Starter	1
80	257-96	Screen-Revolving	1
81	5636	Screw-R. H. M. (Air Cleaner)	1
82	3235	Screw-H. H. C. (Connecting Rod Cap)	2
83	5644	Screw-H. H. Slotted S. T. (Governor Arm)	1

* Not Illustrated

(Continued Next Page)

Part numbers listed for identification only - to obtain parts, contact your local Clinton dealer.

ENGINE #494-1161-099 PARTS LIST (Continued)

Ref. No.	Part No.	Description	No. Used
84	5644	Screw-H. H. S. T. (1-Governor Adj. Arm)(2-Deflector to Head)	3
85	92189	Ring-Retaining Governor Shaft	1
86	4106	Screw-R. H. M. (Spacer and Clamp to Block)	1
87	5652	Screw-H. H. C. (Cylinder Head to Block)	6
88	5677	Screw-F. H. M. (Air Horn to Carburetor)	2
89	3200	Screw-H. H. C. (Base to Block)	2
90	5741	Screw-R. H. S.T. (Condenser to Plate)	1
91	5412-G	Screw & L'Washer Assy. - F. H. M. (Tank Bracket to Head)	1
92	3205-G	Screw & L'Washer Assy. - H. H. C. (1-Tank Bracket to Block)(6-Blower to Housing Plate)	7
93	5856-F	Screw & L'Washer Assy. - H. H. C. (Bearing Plate to Block)	4
94	5682-A	Screw & L'Washer Assy. - P. H. S. T. (Laminations to Brng. Plate)	2
95	5422-A	Screw & L'Washer Assy. - R. H. M. (Tank Bracket to Straps)	2
96	7236-G	Screw & L'Washer Assy. - H. H. C. (Tank Bracket to Head)	2
97	5737	Screw & L'Washer Assy. - R. H. M. (Breaker Points to Breaker Box)	
98	3136	Seal-Oil (Bearing Plate)	1
99	3026	Seal-Oil (Cylinder Block)	1
100	91977	Spacer-Remote Control Clamp	1
101	3568-A	Spark Plug & Gasket Assy.	1
102	7979	Spring-Backlash, Governor	1
103	5745	Spring-Breaker Box Cover	1
104	4001	Spring-Governor	1
105	3068	Spring-Valve	2
106	12065	Strap-Fuel Tank Mounting	2
107	3042	Stud-Valve Chamber Cover	1
108	6155	Stud-Carburetor Mounting	2
108A	12051-A	Tank Assy. -Fuel	1
*	3800	Speed Reducer	1
109	3034	Tappet-Valve	2
110	5738	Terminal-Jamtite Breaker Points	1
*	4554	Tube-Breather	1
112	3031-1	Valve-Exhaust	1
	3031-2	Valve-Exhaust (Oversize)	1
113	3032-1	Valve-Intake	1
	3032-2	Valve-Intake (Oversize)	1
114	5051	Valve-Fuel Shut-Off, flex. line	1
*	5906	Washer-Air Cleaner Screw	1
116	3291	Washer-"C" Valve Keeper	2
*	5971	Washer-Valve Chamber Cover Stud	1
118	3285	Washer-Lock (Pivot Pin)	1
119	3279	Washer	1
*	5488	Washer-Spacer & Clamp to Blk.	1
121	7976	Washer-Gov'nor Arm Adj.	1
122	5941	Washer-Starter Pulley	1
123	3275	Washer-Lock (Base to Block)	2
124	3062-B	Weight Assembly-Gov'nor Yoke	1
125	5739	Washer-Term. Condenser Lead	1
126	4515	Washer-Air Cleaner	1

* Not Illustrated

Part numbers listed for identification only - to obtain parts, contact your local Clinton dealer.

CARBURETOR

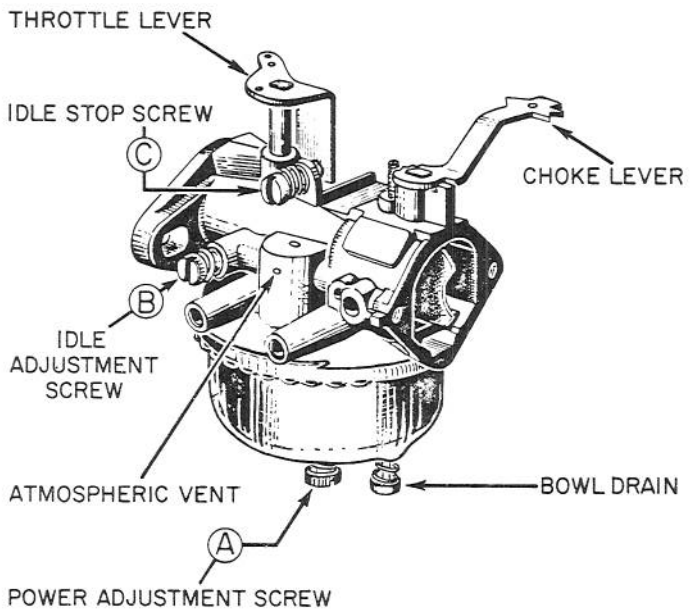

ENGINE AIR VANE for 25" PARKLAWN Only

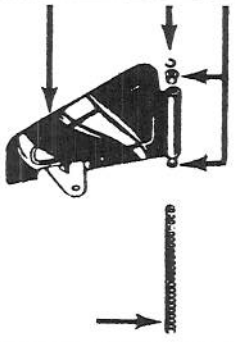

Drawing No. 244-19

Description	IBM No.	Part No.	Qty.
Bushing, Governor Vane Pivot	28-1	7239	2
Retainer, Air Vane	232-5	4430	1
Spring Compression	263-28	10005	1
Vane, Air Governor	107-12	10393	1

Part numbers listed for identification only - to obtain parts, contact your local Clinton dealer.

ENGINE #498-0361-075 (30" Parklawn)

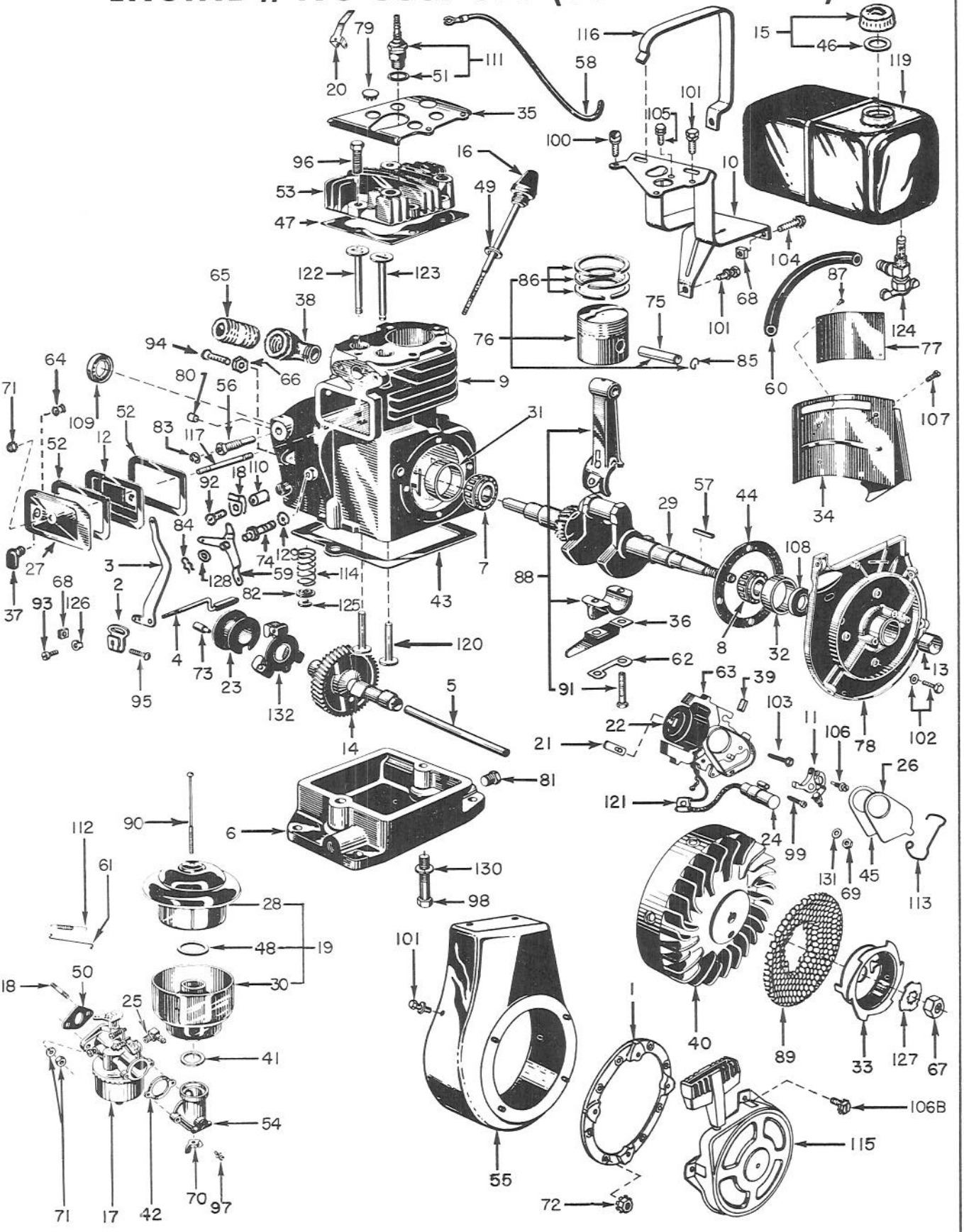

Drawing No. 244-20

ENGINE #498-0361-075 PARTS LIST

Parts are listed for identification only. See your Clinton dealer.

Ref. No.	Part No.	Description	No. Used
1	90989	Adaptor, Recoil	1
2	90505	Arm, Governor, Adjusting	1
3	157-393	Arm, Governor Throttle	1
4	92188-A	Arm & Weight Assy.,Gov'nor.	1
5	3593-A	Axle, Camshaft	1
6	5040	Base, Engine	1
7	12305	Bearing, Cone	1
8	12303	Bearing, Cone, Brg. Plate	1
9	12216-1	Block Assembly, Cylinder	1
10	12059	Bracket, Fuel Tank Mtg.	1
11	5735	Breaker Points Assy.,Magneto	1
12	29-35-5	Breather Assembly	1
13	5750	Cam, Breaker Points	1
14	12008	Camshaft	1
15	3059-A	Cap & Gasket Assy., Fuel	1
16	3295	Cap, Oil Filler	1
17	14374	Carburetor Assy., Clinton	1
18	90272	Clamp, Remote Control Cable	1
19	6215-A	Cleaner Assembly, Air	1
20	3499	Clip, Ignition Shorting	1
21	5734	Clip, Coil, Holding	1
22	5770	Coil, Magneto, w/o laminations	1
23	3063-1	Collar Assembly, Governor	1
24	5589-A	Condenser, Magneto	1
25	5052	Connector, Flexible Fuel Line	1
26	5743	Cover,Dust,Mag. Brkr. Points	1
27	7938	Cover, Valve Chamber	1
28	6215	Cover & Element, Air Cleaner	1
29	12119	Crankshaft	1
30	6216	Cup, Air Cleaner	1
31	12306	Cup, Bearing, Block	1
32	12301	Cup, Bearing, Bearing Plate	1
33	90871	Cup, Starting	1
34	12006	Deflector, Air, Name Plate	1
35	12005	Deflector, Air, Cylinder Head	1
36	12017-1	Distributor, Oil	1
37	90610	Elbow, Breather	1
38	7274	Elbow, Muffler	1
39	5742	Felt, Lube, Cam Follower	1
40	5754-A	Flywheel Assy. with Magnets	1
41	10259	Gasket, Air Cleaner to Air Horn	1
42	31445	Gasket, Air Horn to Carburetor	1
43	4465-1	Gasket, Engine Base to Block	1
44	3056	Gasket, Bearing Plate (Standard .015 Thick) NOTE: Gaskets may also be ordered in the following thicknesses: .005, .010, .020	1
45	5744	Gasket, Breaker Points Cover	1
46	3113	Gasket, Fuel Tank Cap	1
47	12253	Gasket, Cylinder Head	1
48	6217	Gasket, "O" Ring, Air Cleaner (Element to Cup)	1
49	3297	Gasket, Oil Filler Cap	1
50	6002	Gasket, Asbestos (Carburetor to Block)	1
51	3115	Gasket, Spark Plug	1
52	3057	Gasket, Valve Chamber Cover	2
*	91556	Gasket Kit, Engine Overhaul	1
53	12011	Head, Cylinder	1
54	6453	Horn, Air	1
55	90331-B	Housing, Blower	1
56	12310	Housing Assy.,Gov.Shaft Brg.	1
57	10339	Key, Flywheel	1
58	90761	Lead, High Tension	1
59	157-406-5	Lever, Speed Adjusting	1
60	6316	Line, Fuel, Flexible	1
61	7920	Link, Carb. to Governor Arm	1
62	12018	Lock, Connecting Rod Screw	1
63	91740	Magneto Assembly	1
64	10253	Mandrel, Tube to Air Horn, Tube to Cover	2
65	12061	Nipple, Muffler	1
66	4107-A	Nut, Lock, Gov. Stop Screw	1
67	5942	Nut, Hex, Starter Pulley	1
68	3253	Nut, Square, (1-Gov. Adj. Arm) (2 - Tank Straps)	3
69	5740	Nut, Terminal Condenser Lead	1
*	4425	Nut, Muffler Lock	1
70	7044	Nut, Wing, Air Cleaner Screw	1
71	3255-A	Nut & Lockwasher Assy.,Hex (1 - Valve Cover Stud) (2 - Carburetor to Block)	3
72	4107-A	Nut & Lockwasher Assy., Adaptor to Housing	4
73	3656	Pin, Retaining, Gov. Yoke	1
74	203-208	Pin, Pivot, Speed Control Lever	1
75	7923	Pin, Wrist	1
76	12376-A	Piston Assembly, Standard NOTE: Piston assemblies are available in the following oversizes: .010, .020, .030, .040	1
77	6530	Plate, Name	1
78	12054	Plate, Bearing	1
79	12340	Plug, Button	3
80	3281	Plug, Camshaft Axle	1
81	3289	Plug, Oil Drain	2
82	3028	Retainer, Valve Spring	2
83	92189	Ring, Retaining, Governor Shaft	1
84	5857	Ring, Retaining Speed Control Lever	1
85	6034	Ring, Retainer, Wrist Pin	2
86	12023	Ring Set, Standard NOTE: Ring Sets are also available in the following oversizes: .005, .010, .020, .030, .040	1
87	5460	Rivet, Tubular, Name Plate	4
88	12002-A	Rod Assembly, Connecting	1
89	257-96	Screen, Revolving	1
90	5637	Screw, Air Cleaner	1
91	5635	Screw, Connecting Rod Cap	2
92	4106	Screw, Spacer & Clamp to Block	1
93	5644	Screw, Governor Arm	1
94	4106	Screw, Speed Contr. Lever, Adj.	1
95	5814	Screw, Governor Adj. Arm	1
96	5652	Screw, Cyl. Head to Block	6
97	5677	Screw, Air Horn to Carburetor	2
98	3200	Screw, Base to Block	2
99	5741	Screw, Condenser to Plate	1
100	5412-G	Screw & Lockwasher Assy., Tank Bracket to Head	1

* Not Illustrated

(Continued Next Page)

ENGINE #498-0361-075 PARTS LIST (Continued)

Ref. No.	Part No.	Description	No. Used
101	3205-G	Screw & Lockwasher Assy., (1 - Tank Bracket to Block) (6 - Blower Hsg. to Plate)	7
102	5856-F	Screw & Lockwasher Assy., Bearing Plate to Block	4
103	5682-A	Screw & Lockwasher Assy., Laminations to Brg. Plt.	2
104	5422-A	Screw & Lockwasher Assy., Fuel Tank Straps	2
105	7236-G	Screw & Lockwasher Assy., Tank Bracket to Head	1
106	5737	Screw & Lockwasher Assy., Brkr. Points to Brkr. Box	1
106B	91758-A	*Screw & Lockwasher Assy., Recoil to Adaptor	4
107	5644-A	Screw & Lockwasher Assy., Deflector to Head	1
108	12304	Seal, Oil, Bearing Plate	1
109	3136	Seal, Oil, Cylinder Block	1
110	91977	Spacer, Remote Cable Clamp	1
111	3568-A	Spark Plug & Gasket Assy.	1
*	3800	Speed Reducer Assembly	1
112	7979	Spring, Backlash, Governor	1
113	5745	Spring, Breaker Box Cover	1

* Not Illustrated

Ref. No.	Part No.	Description	No. Used
*	4001	Spring, Governor	1
114	3068	Spring, Valve	2
115	13516	Starter Assembly, Recoil	1
116	12065	Strap, Fuel Tank Mounting	2
117	5680	Stud, Valve Chamber Cover	1
118	6155	Stud, Carburetor Mounting	2
119	16341-A	Tank Assy., Fuel (6 Quart)	1
120	3034	Tappet, Valve	2
121	5738	Terminal, Jamtite Brkr. Pts.	1
*	4554	Tube, Breather	1
122	3031-1	Valve, Exhaust	1
	3031-2	Valve, Exhaust (Oversize)	1
123	3032-1	Valve, Intake	1
	3032-2	Valve, Intake (Oversize)	1
124	5051	Valve, Fuel Shut-Off	1
125	3291	Washer, "C" Valve Keeper	2
126	7976	Washer, Governor Arm Adj.	1
127	5879	Washer, Starter Pulley	1
*	5488	Washer, Spacer & Clamp to Blk.	1
128	3279	Washer, Speed Control Lever	1
129	3285	Washer Lock, Pivot Pin to Blk.	1
130	3275	Washer, Lock, Base to Block	2
131	5739	Washer, Terminal Cond. Lead	1
132	3062-B	Weight Assy., Governor Yoke	1

TORO POWER MOWERS

Toro power mowers and Power Handle implements are designed and built to give years of precision performance . . . to make them "the best you can buy." And there's over 40 years of manufacturing experience to back them up.
One of Toro's most important objectives — and one which has helped make Toro the world's largest manufacturer of power mowers — is to provide the customer with complete local service and parts. This Toro has done through an extensive chain of service dealers, factory-trained to give you the most careful, competent care for your Toro work-saver.



19" WHIRLWIND



21" HAND PROPELLED WHIRLWIND



21" SELF-PROPELLED WHIRLWIND



21" SPORTLAWN



25" PARKLAWN



RED RIDER

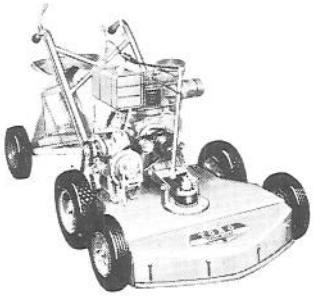

31" GRASSKING



30" PARKLAWN

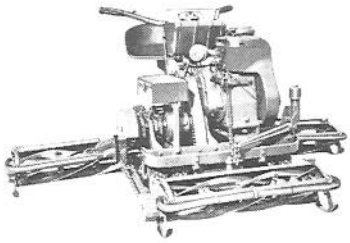

76" PROFESSIONAL



21" HEVI-DUTY WHIRLWIND



25" HEVI-DUTY WHIRLWIND



32" SELF-PROPELLED WHIRLWIND

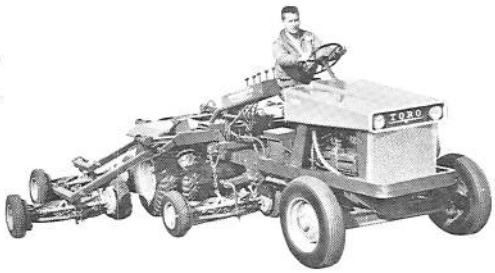

7 UNIT HYDRAULIC PARKMASTER

Reel Mower or Rotary Mower . . . Self Propelled or Riding Mower . . . Whatever your preference in Power Mowers, Toro makes a model to fit your needs. Choose from Toro's complete line of fine mowing equipment.

Toro has a mower that's just right for you. And Toro Mowers are the best you can buy!

TORO MANUFACTURING CORPORATION - Minneapolis 20, Minnesota, U.S.A.

LITHO IN U. S. A.

TORO *Builds the right Power Mower for every need!*