FORM NO. 3314-249 REV. A

TORO®

MODEL NO. 30586

INSTALLATION INSTRUCTIONS

FLOW COMBINING KIT

GROUNDSMASTER® 580 D

Note: If a front-mounted implement, such as a broom or a snowthrower, is used with the Groundsmaster 580D, the Flow Combining Kit must be installed on the machine. The Flow Combining Kit lets you direct all the oil flow to the front implement by shutting off the flow of oil to the wing units. Complete oil flow to the front implement is required to assure the implement gets maximum power.

REMOVE REAR PANEL AND BATTERY

1. Park machine on a level surface, lower all cutting units, shut engine off and engage the parking brake.

2. Open the hood and prop it up. Unlatch and remove left and right engine panels (Fig. 1).

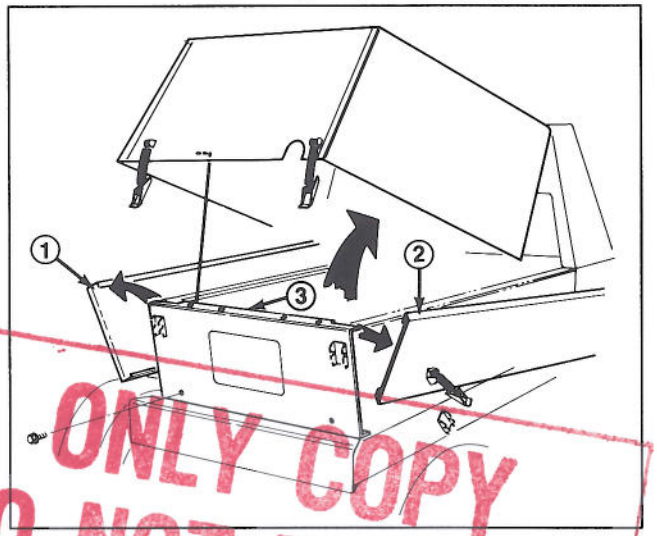

Figure 1
1. Left Engine Panel
2. Right Engine Panel
3. Rear Panel

ONLY COPY
DO NOT REMOVE
Tech. Publications

3. Remove (6) flangehead screws securing rear panel to frame (Fig. 1). Set rear panel aside.

4. Remove (2) flangehead screws retaining battery tray to the battery base (Fig. 2). Slide battery tray out to the side. This gives you more space to work on the hydraulic system.

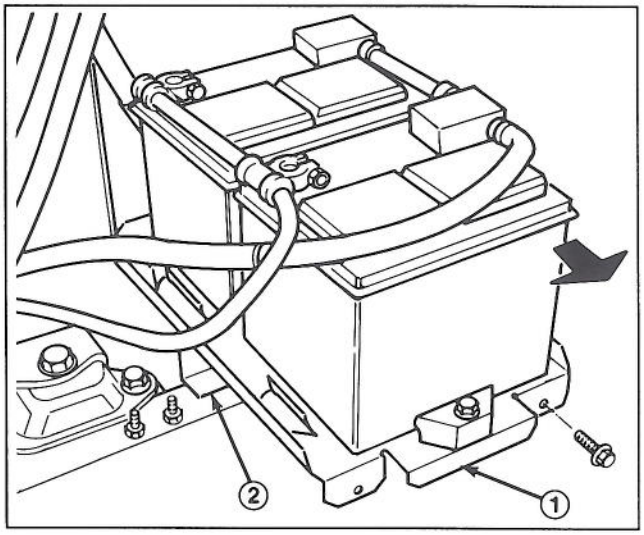

Figure 2
1. Battery Tray 2. Battery Base

DRAIN OIL FROM PUMP AND REMOVE ELBOWS

1. Put an oil pan below the fixed tandem gear pump.

2. Disconnect hoses from the fittings on the right front and rear of the pump (Fig. 3). Also disconnect the right front hose, which is not needed, from the straight fitting on the PTO manifold (Fig. 3).

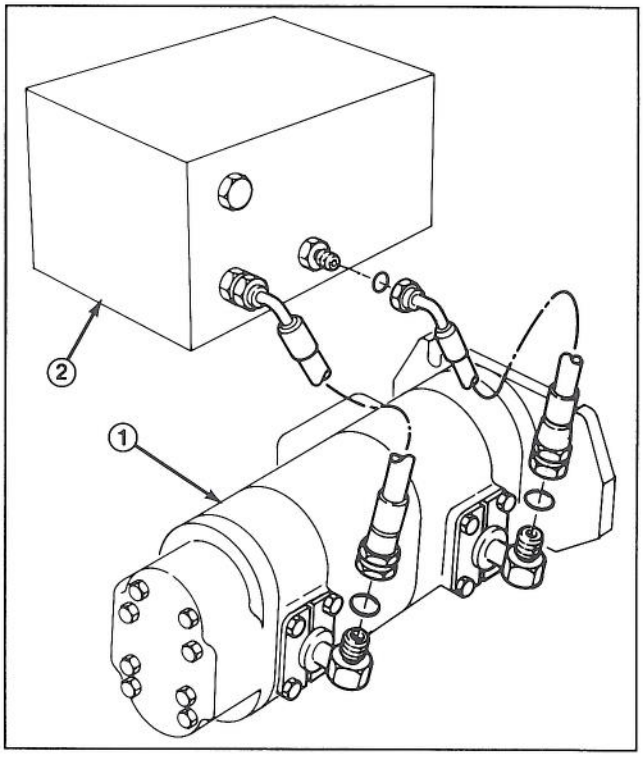

Figure 3
1. Pump 2. PTO Manifold

© The TORO Company -1990

3. Remove the 90 degree fittings from the right front and rear of the pump because they will not be used (Fig. 4). However, the two-piece mounting flange that held the rear fitting to the pump will be used later. The other two-piece mounting flange will not be used.

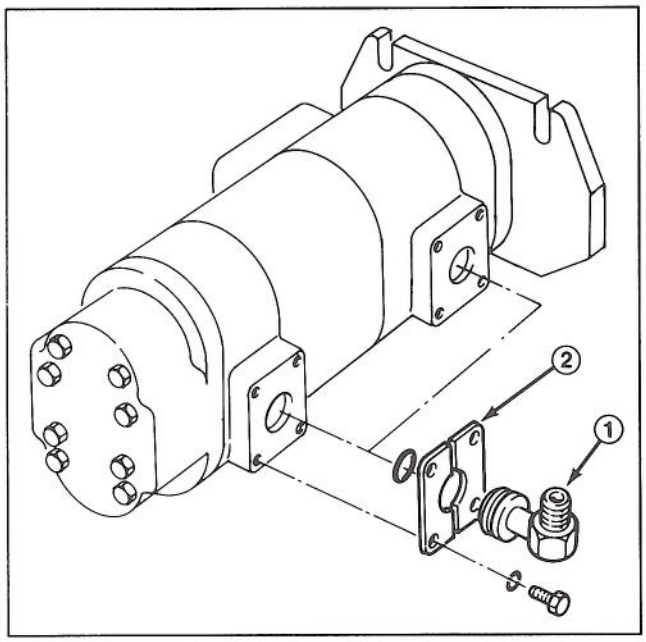

Figure 4
1. 90 Degree Fitting
2. Mounting Flange

INSTALL FLOW COMBINING VALVE (Fig. 5)

1. The flow combining valve has an arrow marked on its upper right side. With the arrow pointing up, install 90 degree fitting and O-ring into rear port on valve. Also install straight fitting and O-ring into the front port on the valve.

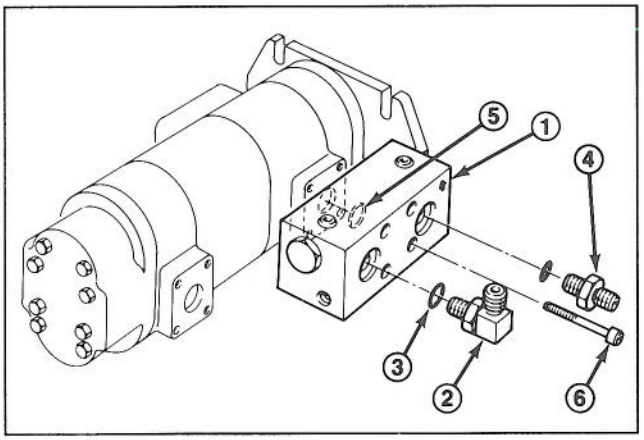

Figure 5
1. Flow Combining Valve
2. 90 Degree Fitting
3. O-ring
4. Straight Fitting
5. O-ring
6. Socket Head Capscrew

Note: The 90 degree fitting may need slight adjustment when the hydraulic hose is eventually installed.

2. Mount flow combining valve to front port on side of pump with O-ring and four socket head capscrews. The arrow on the valve must point up to assure proper installation.

INSTALL FITTINGS AND U-SHAPED HYDRAULIC TUBE

1. Install T-fitting and O-ring in port at left rear of pump, using existing two-piece mounting flange, four lockwashers and capscrews (Fig. 6).

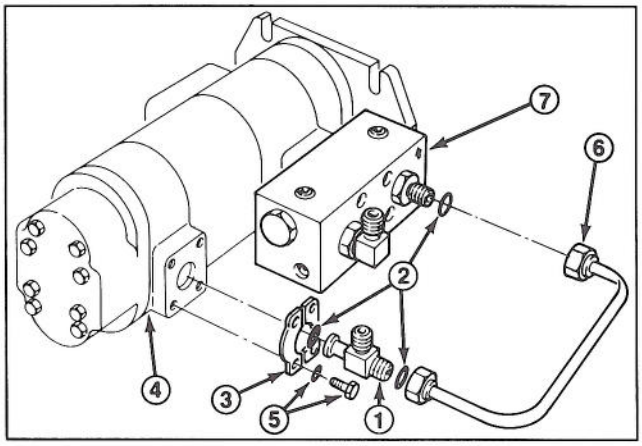

Figure 6
1. T-fittings
2. O-rings
3. Mounting Flange
4. Pump
5. Capscrew/lockwasher
6. Hydraulic Tube
7. Flow Combining Valve

2. Connect U-shaped hydraulic tube and O-rings to end of T-fitting and the straight fitting at front of flow combining valve (Fig. 6).

3. Remove bottom right plug from end of flow combiner. Install 90 degree fitting and O-ring into port (Fig. 7).

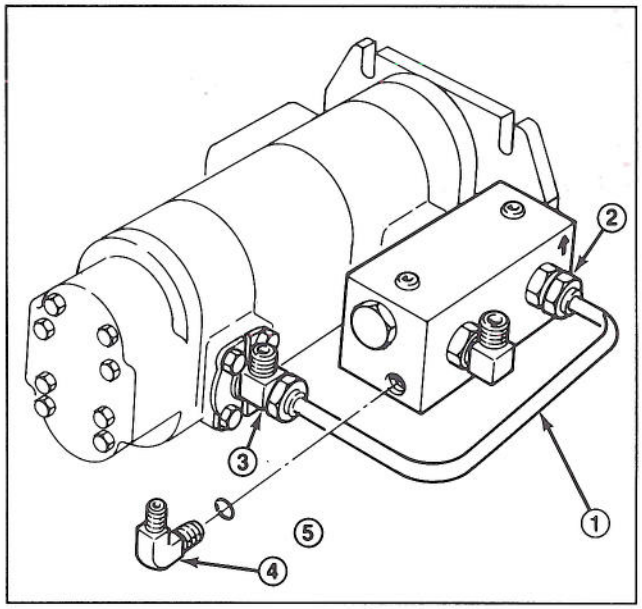

Figure 7
1. Hydraulic Tube
2. Straight Fitting
3. T-fitting
4. 90 Degree Fitting
5. O-ring

Note: The 90 degree fitting may need slight adjustment when the hydraulic hose is eventually installed.

4. Install 90 degree fitting and O-ring into top left rear port in PTO manifold (Fig. 8).

5. Assemble regulator valve, 90 degree swivel fitting, straight fitting and O-rings (Fig. 8).

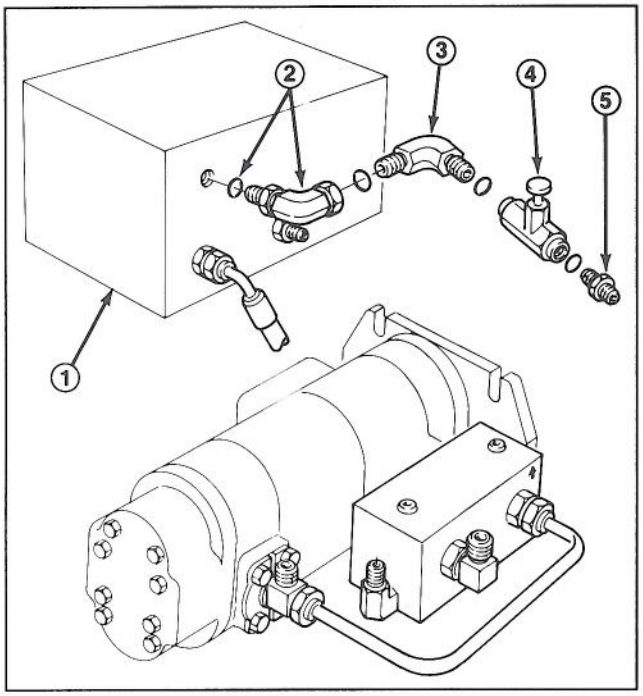

Figure 8

1. PTO Manifold
2. 90 Degree Fitting/O-ring
3. 90 Degree Fitting/O-ring
4. Regulator Valve/O-ring
5. Straight Fitting /O-ring

6. Screw swivel fitting into 90 degree fitting installed in step two (Fig. 8).

CONNECT HYDRAULIC HOSES (Fig. 9)

Note: When hydraulic hoses are installed, it may be necessary to slightly adjust each fitting.

1. Connect hose "A" and O-rings to regulator valve and 90 degree fitting at rear end of flow combining valve.

2. Connect hose "B" and O-rings to 90 degree fittings on end of flow combining valve and straight fitting on PTO manifold.

3. Connect existing hose "C" and O-rings from PTO manifold to top of T-fitting at rear of pump.

INSTALL METAL TAG AND DECALS

1. Affix remaining warning decal to one side of the metal tag and the operating decal to the other side. Install metal tag to flow combining regulator with cable tie (Fig. 9).

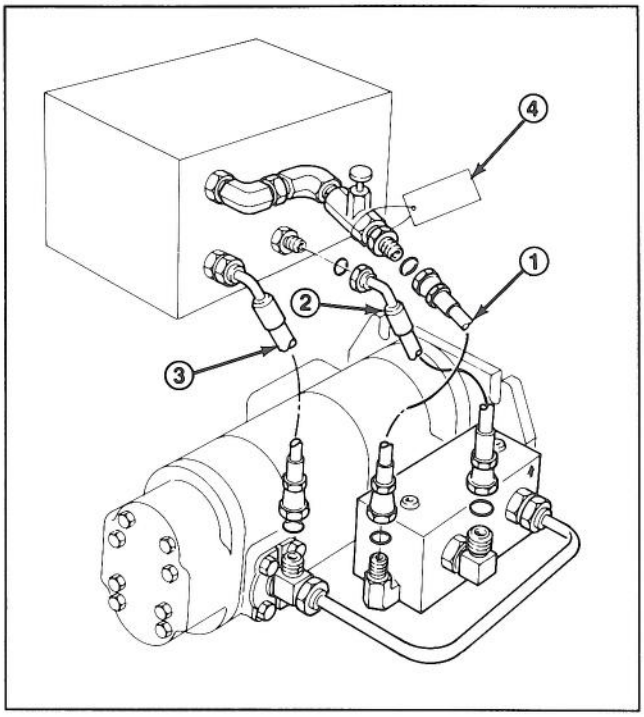

Figure 9

1. Hose "A"
2. Hose "B"
3. Hose "C"
4. Metal Tag w/Decals

2. Affix warning decal to center of front frame below steering tower.

CHECK HYDRAULIC SYSTEM

1. If all three cutting units are still on the machine, make sure to completely close the flow combining valve.

2. Make sure all hydraulic fittings are tight.

DANGER

Keep body and hands away from pin hole leaks or nozzles that eject high-pressure hydraulic fluid. Use cardboard or paper, not hands, to search for all leaks. Highly pressurized hydraulic fluid that is escaping can penetrate skin and cause serious injury. If fluid is accidentally injected into the skin, it must be surgically removed within a few hours by a doctor familiar with this type of injury, otherwise gangrene may occur.

3. Start the engine, lower the cutting units and engage the deck drive/PTO switch. All cutting units should be operating at the same speed. If the side cutting units are not operating, disengage

switch immediately and assure that the flow combining valve is completely closed.

4. With the engine running and all other controls disengaged, check for leaks around the newly installed hydraulic parts.

5. After checking for leaks, shut the engine off.

OPERATING INSTRUCTIONS

The Flow Combining Kit, by means of an in-line regulator valve between the flow combiner and the manifold, controls the flow of oil to the front and side hydraulic motors.

1. **Using a front-mounted implement** - Attachments, such as snowthrowers and brooms that are powered by the front hydraulic motor, require maximum oil flow to operate properly. To assure maximum oil flow to the front hydraulic motor and attachment, turn the regulator valve counterclockwise until it is completely open to combine flow.

2. **Using three cutting units** - Three cutting units attached to the hydraulic motors require equal oil flow and power so the blades operate at the same speed. To separate flow and assure equal oil flow to all three hydraulic motors, turn regulator valve clockwise until it is completely closed.

CAUTION

If the flow combining regulator valve is accidentally allowed to remain open:

- **the front cutting unit blades will spin excessively fast and be very noisy.**
- **the side cutting units will not engage.**

Failure to close the regulator valve may result in serious injury to the operator of the machine, and/or bystanders, especially from thrown objects. Whenever you notice the blades spinning excessively fast, disengage the deck drive/PTO switch immediately. Then have a qualified mechanic close the regulator valve before you resume operating the cutting units.