TORO®

OWNERS OPERATING AND PARTS MANUAL

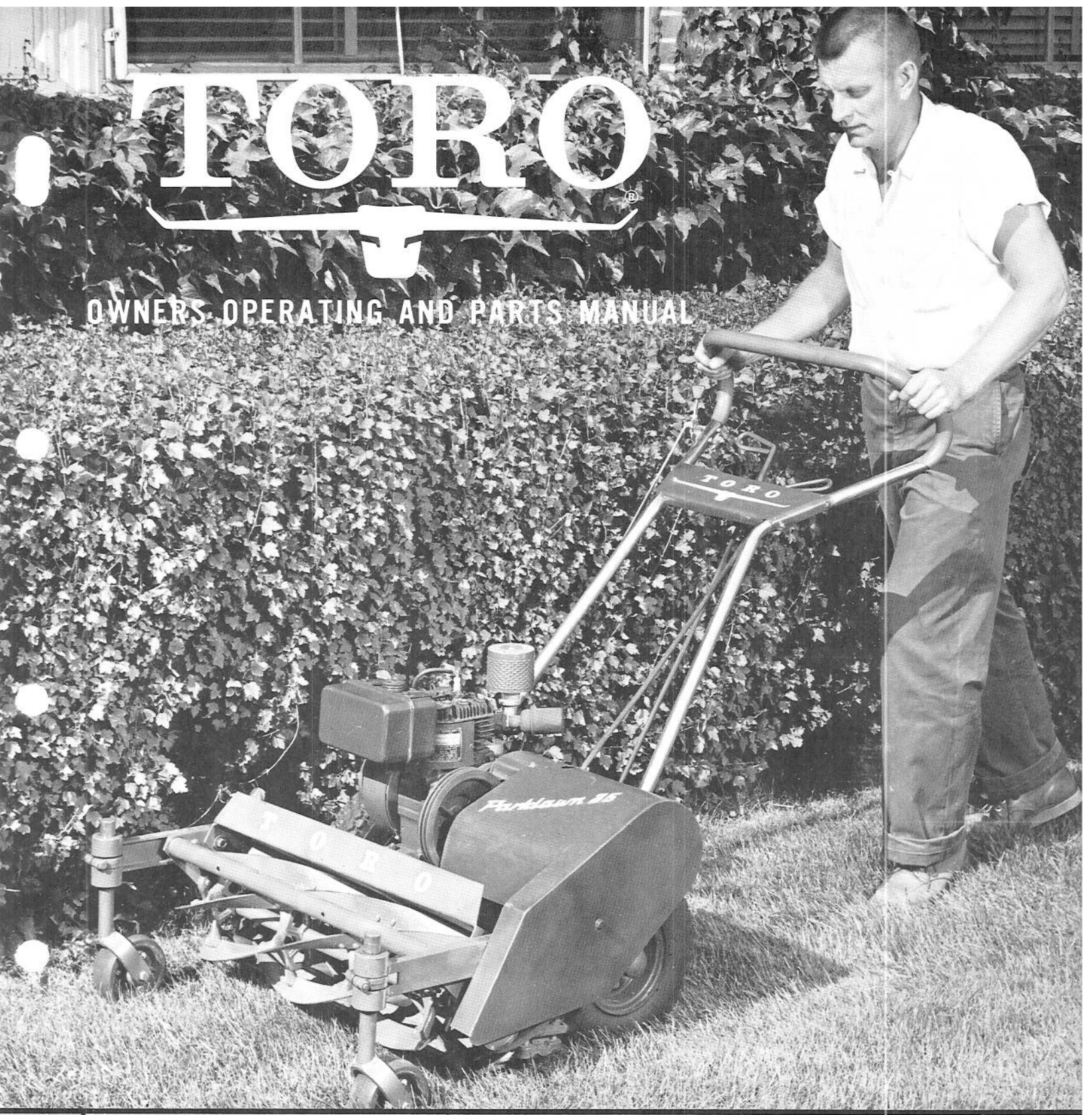

25" PARKLAWN

MODEL NO. 12012

30" PARKLAWN

MODEL NO. 12112

Price 25 cents

To The Toro Owner

This Owner Manual has been especially prepared for your information and guidance in the operation and care of your new Toro mower. Information on care and operation of the engine is contained in a separate manual furnished with the engine.

Properly adjusted, operated and maintained, this Toro mower will respond quickly and easily to every reasonable demand and give years of reliable service.

Toro mowers are manufactured by an organization of mowing machinery specialists for over forty years. Each machine is carefully inspected and tested before leaving the factory. For best performance from your Toro mower, study this manual for regular maintenance procedures.

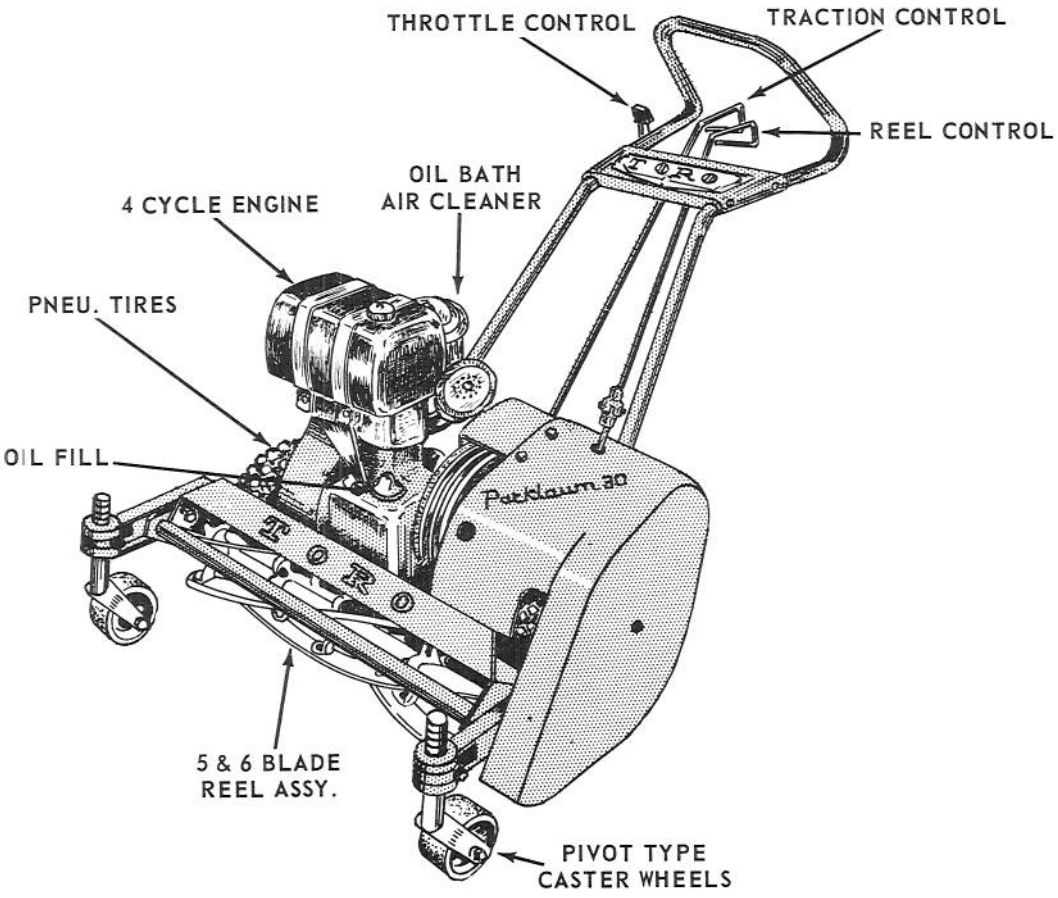

KNOW YOUR MOWER

Warranty

The Manufacturer warrants each new piece of equipment sold to be free of defects in material and workmanship. For one year from the purchase date of consumer line equipment or 45 days if sold for commercial use, Toro Manufacturing Corporation will repair or replace for the original purchaser, free of charge, through any Authorized Service Dealer, any part or parts found at our factory in Minneapolis, Minnesota, to be defective under normal use and service. All institutional equipment is warranted for ninety (90) days from the purchase date.

This Warranty does not obligate the Manufacturer to bear the cost of transportation charges in connection with the replacement or repair of defective parts -- nor shall it apply to a machine upon which repairs or alterations have been made, unless authorized by the manufacturer.

This Warranty does not include nor cover standard accessories produced by other manufacturers. Such accessories have separate warranties by their respective manufacturers . . . and repair or exchange will be made on the basis of such warranties, and the policies authorized by them shall be adhered to.

This Warranty is in lieu of all other warranties expressed or implied.

COPYRIGHT 1962 BY
TORO MANUFACTURING CORPORATION
MINNEAPOLIS 6, MINNESOTA – U.S.A.

LUBRICATION POINTS

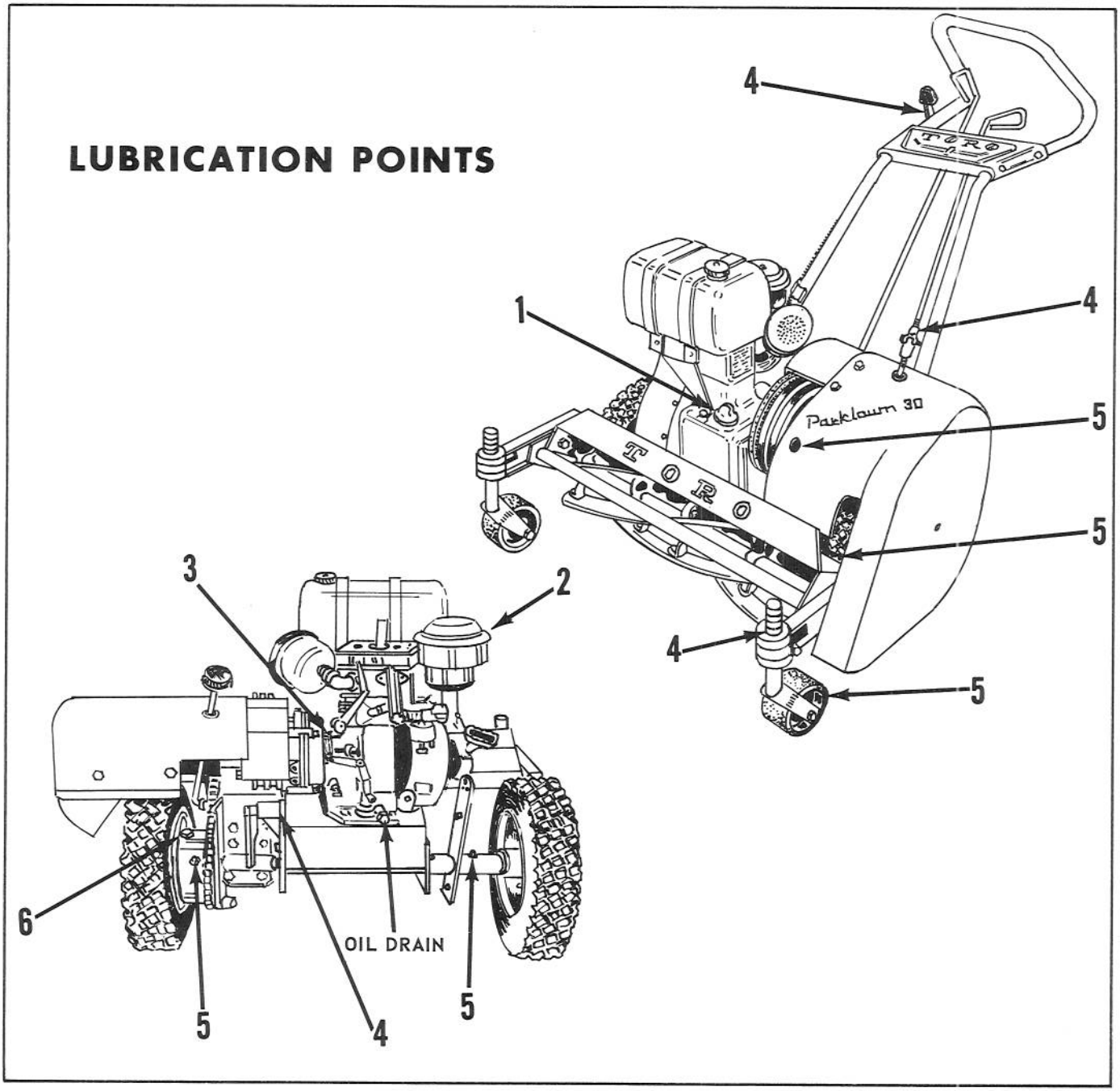

1. ENGINE: USE GOOD GRADE OF S.A.E. 30 MOTOR OIL, CHANGE EVERY 25 OPERATING HOURS, OFTENER UNDER DUSTY CONDITIONS.

2. AIR CLEANER TO LEVEL MARK, USE GOOD GRADE OF S.A.E. 30 MOTOR OIL, CHANGE EVERY 25 OPERATING HOURS, OFTENER UNDER DUSTY CONDITIONS.

3. REDUCTION GEAR CASE, S.A.E. 30 MOTOR OIL, FILL TO LEVEL MARK, USE APPROXIMATELY 2 OZ.

4. WEAR POINTS, LUBRICATING OIL, OIL SPARINGLY.

5. GREASE FITTINGS, TWO ON THE AXLE HOUSING, ONE ON TRACTION COUNTERSHAFT, ONE ON THE WHEEL HUB NEXT TO TRANSMISSION AND ONE ON CASTER WHEELS, LUBRICATING OIL, OIL FREQUENTLY.

6. TRANSMISSION, REPACK WITH GOOD GRADE OF #2 GUN GREASE ONCE A YEAR.

NOTE: The bearings used on the reel and on the power takeoff shaft are factory packed with grease and sealed; they need no additional attention for the life of the bearing.

SPECIFICATIONS

ENGINE: 25" Parklawn - 3.25 H.P. Clinton 406 series recoil - oil bath air cleaner
30" Parklawn - 4.50 H.P. Clinton 498 series recoil - oil bath air cleaner

FUEL TANK CAPACITY: 25" - 5 quarts
30" - 6 quarts

REEL CLUTCH: Tight slack "V" belt

TRACTION CLUTCH: Tight slack "V" belt

REEL DRIVE: "B" section "V" belt from engine P.T.O. shaft 6.1 P.D. and 5.15 P.D. pulley on reel shaft (1.18:1 speed up).

REDUCTION, ENGINE TO REEL:
25" - 5.2:1 reduction including 6:1 reduction in engine
30" - 5.2:1 reduction including 6:1 reduction in engine

REEL: 25" - 6 blades; 30" - 5 blades
8" diameter blades, double riveted to malleable iron spiders $1\frac{1}{8}$" dia. shaft and double seal ball bearings.

BED KNIFE: 25" - ground single edge
30" - ground double edge
Molybdenum alloy steel screwed to the bed bar with stainless steel screws.

BED BAR: 25" - fabricated steel; 30" - cast iron on cylindrical pivots adjusted with opposed stainless steel screws.

TRACTION DRIVE: Forward - "B" section "V" belt from engine on 4.15 P.D. and 5.6 P.D. pulleys (1.35:1 reduction) 1/2" pitch x 5/16" sprocket (4.45:1 reduction)
Reverse: 2 groove cast iron 6.75" P.D. sheaves operating against two 4.38" P.D. asbestos friction discs (1.54:1 reduction)

REDUCTION, ENGINE TO WHEELS:
Forward - 36:1 including 6:1 reduction in the engine
Reverse - 42:1 including 6:1 reduction in the engine

WHEELS: Drive Wheels - steel disc, cast iron hub, oilite bushings
Front Casters - cast aluminum disc, oilite bushings

TIRES: Drive Wheels - 3.5 x 6.00 pneumatics
Front Casters - 4-3/4 O.D. x 2" wide solid rubber tire

DIFFERENTIAL: Enclosed bevel gears

GROUND SPEED: Forward - 2.0 m.p.h. to 3.5 m.p.h.
Reverse - 1.7 m.p.h. to 3.0 m.p.h.

HEIGHT OF CUT: 3/8" to $2\frac{1}{2}$" by raising or lowering the front casters and/or rear axles.

WIDTH OF CUT: 25" and 30"

CLIP: 25" - .89"; 30" - 1.07"

CHASSIS AND SIDE PLATES: Welded flat and tubular steel.

DIMENSIONS:

25" Parklawn	30" Parklawn
Width - 32"	Width - 36"
Length - 54"	Length - 54"
Height - 42"	Height - 42"

WEIGHT: 25" - 235 pounds; 30" - 252 pounds

OPTIONAL EQUIPMENT:
Handle - one piece 1" O.D. x 14 ga. wall, welded steel tubing, plastic handle grips.
Riding Sulky - Frame: welded 1" x 14 ga. steel tubing.
Seat: upholstered pan mounted on flat steel spring mounting.
Wheel: one steel disc caster wheel mounted in fork pivoted on oilite bearing.
Tire: 3.50 x 6.00 pneumatic.
Steering - automatic type linkage actuated by tubular handle bar w/plastic handle grips.
Controls - traction clutch. Reel clutch throttle control, ignition cut-off and engine recoil start all within operator's reach.

HOW TO SET UP THE TORO PARKLAWNS

GENERAL DESCRIPTION

The Toro 25" and 30" Parklawn is a riding or walking, reel-type mower, convenient forward, reverse, and reel drive controls.

This permits maximum maneuverability and control by the operator, and adds to the ease and convenience of the grass cutting operation.

Study the setting-up and operating steps in this manual as well as the engine operation and maintenance instructions in the engine manual before proceeding.

When crated for shipment at the factory, the Parklawn is ready for operation with the exception of assembling the rider frame or walking handle to the mower, and installing throttle control. The following setting-up instructions should be taken:

1. Remove ALL components from shipping crate; be sure to include bag of fittings.

2. Attach rider assembly or install handle assembly to mower unit.

3. Install throttle control.

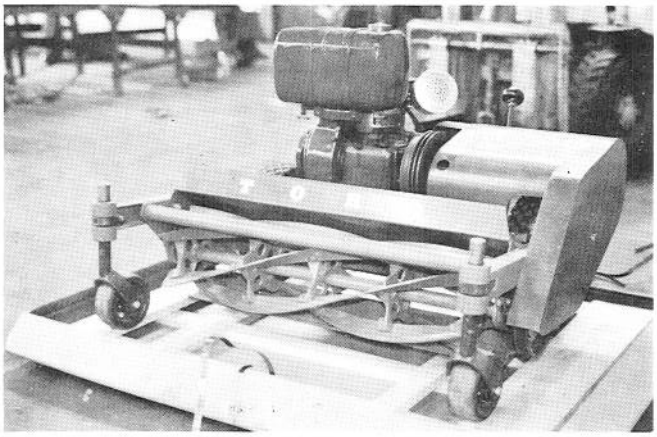

TO SET UP THE PARK LAWN FOR OPERATION FOLLOW THESE INSTALLATION INSTRUCTIONS.

1 REMOVE FROM SHIPPING CRATE AND INSPECT

The Parklawn mowing unit is completely set-up and ready for operation when it leaves the factory. The throttle control wire and casing are attached to the walk type handle or riding sulky. BE SURE THAT THIS CASING IS NOT KINKED OR TWISTED UPON UNPACKING OR DURING INSTALLATION TO THE ENGINE.

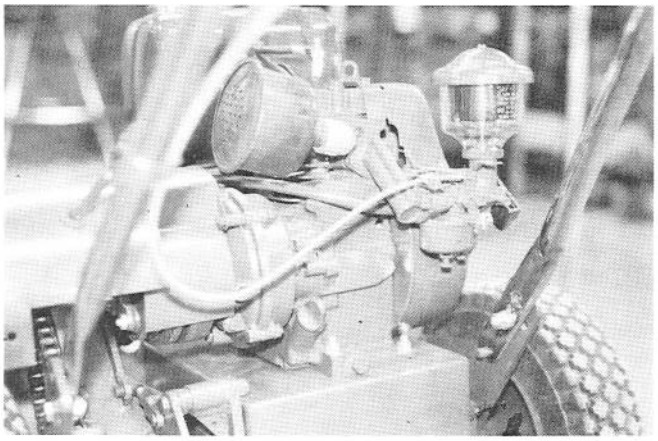

2 INSTALL THROTTLE CONTROL TO THE CARBURETOR ON 25" PARKLAWN

Install throttle control to carburetor and place clip on throttle control cable to lower part of handle as shown in photo at left. For more detailed instructions on hookup to carburetor, see graph on following page.

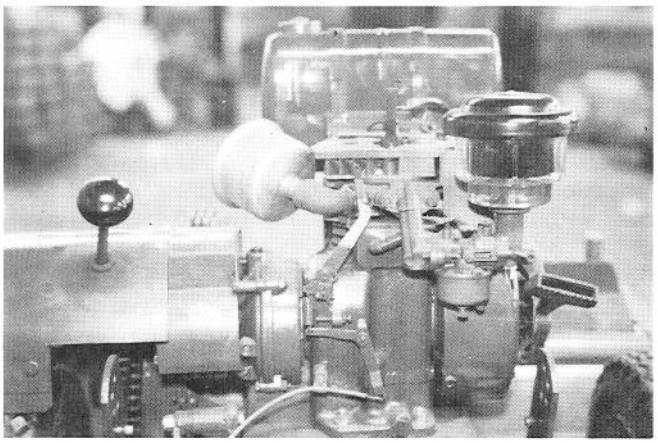

3 INSTALL THROTTLE CONTROL TO THE CARBURETOR ON 30" PARKLAWN

Installation of the throttle control wire to the carburetor on the 30" Parklawn as illustrated in the photo at left is in a different position from the 25". Hookup of this wire is again better shown in the graph on the following page.

SULKY and HANDLE INSTALLATION

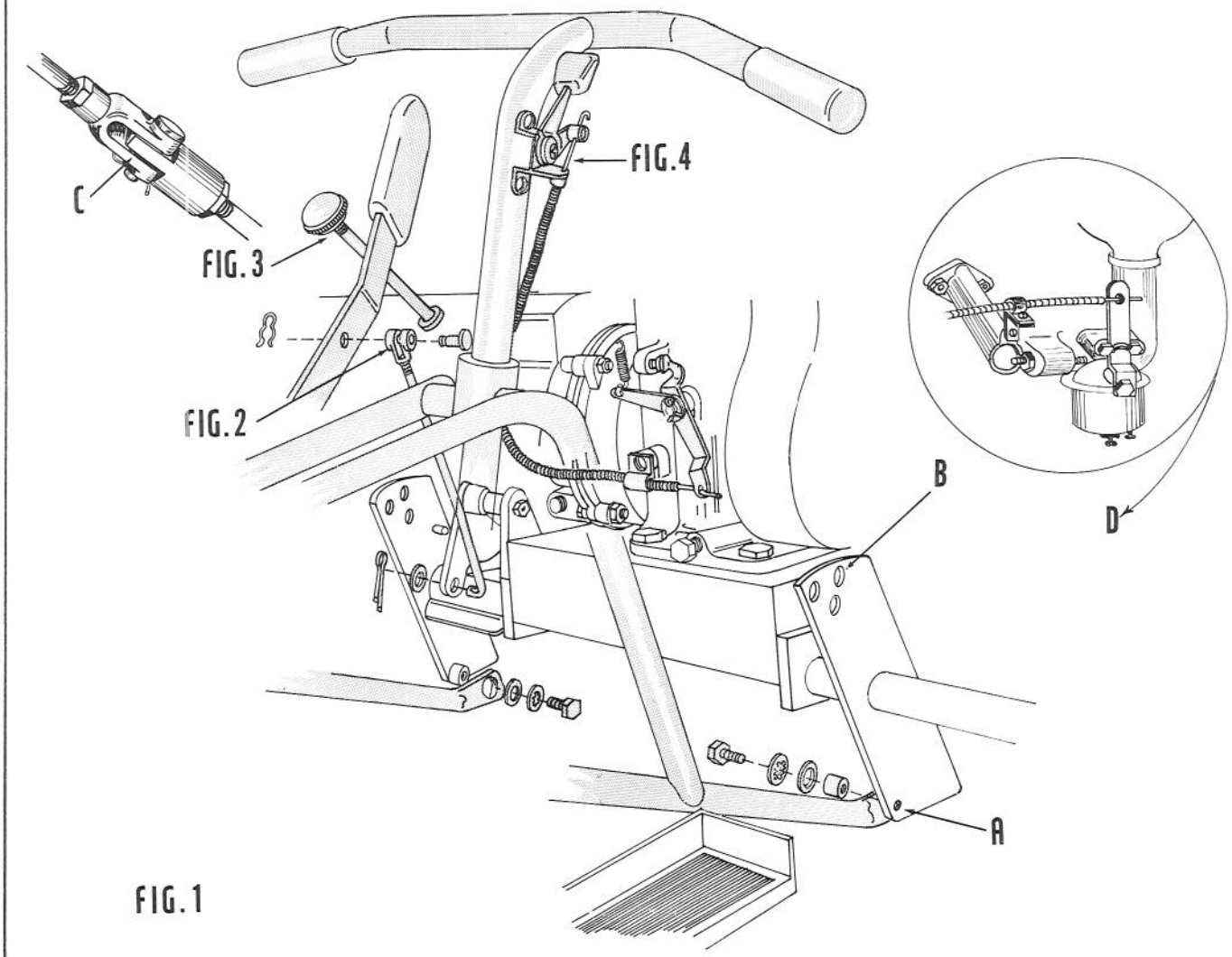

FIG. 1

Fig. 1

Install the riding sulky frame in position on the mower by fastening the arms in place at point "A" with fasteners in loose parts bag. CAUTION: Do not overtighten attaching bolts as this will deform nylon bushings. When installing walking type handle, place slotted holes in lower handle on pins on inside of handle brackets. Holes at point "B" are for handle height adjustment.

Fig. 2

Illustration shows proper position of traction control rod to handle and bell crank when riding sulky is used. On walk type handle use longer rod and insert through upper handle and fasten to bell crank in same manner as on the rider hookup.

Fig. 3

Shows reel control rod on 25" and 30" model when used with riding sulky. When walking handle is used, remove control knob and install adapter "C" and long rod to upper handle.

Fig. 4

Shows installation of throttle control to handle and control wire to carburetor on rider frame. Point "D" illustrates proper hookup of throttle wire to carburetor when walk type handle is used.

OPERATING THE TORO PARKLAWN

1 CHECK LUBRICATION, OIL, AND GASOLINE

Before operating the mower for the first time, fill the engine crankcase with a good grade S.A.E. 30 motor oil. Keep engine oil level to full mark. Fill the reduction gear case with S. A. E. 30 motor oil up to the oil level mark, using approximately 2 ounces. Fill the air cleaner to the oil level mark with S.A.E. 30 motor oil. Check to see that all zerk fittings are greased and control casings are oiled. The transmission is packed with No. 2 gun grease at the factory, but should be checked before first operation. REFER TO THE ENGINE MANUAL FOR MORE DETAILED INFORMATION ON ENGINE CARE. Fill the gas tank with a good grade of regular gasoline. Be sure to open fuel valve "A" under tank.

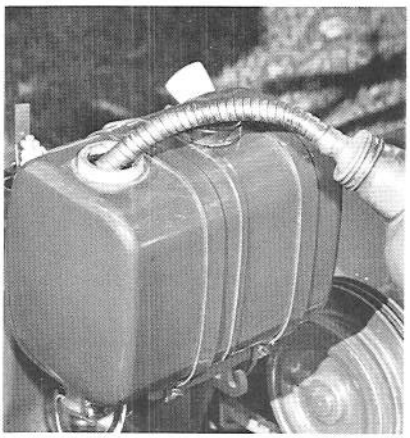

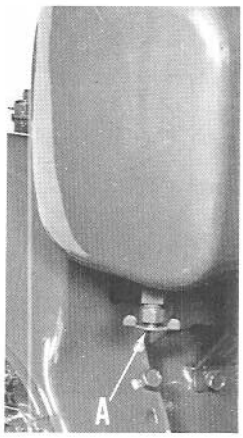

2 PUT TRACTION AND REEL LEVERS IN NEUTRAL

The traction drive and reel drive control levers are located at the driver's left on the riding sulky. Lever "A" in Fig. 1 is the traction control; to move forward, push ahead; to reverse, pull lever full back. Neutral is in the center position. Reel control lever "B" is the shorter lever, has two positions--neutral as shown and in to start reel in motion. Walk type handle controls have same action. See Fig. 2. BE SURE BOTH LEVERS ARE DISENGAGED BEFORE STARTING THE ENGINE.

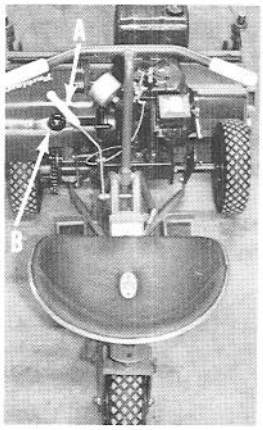

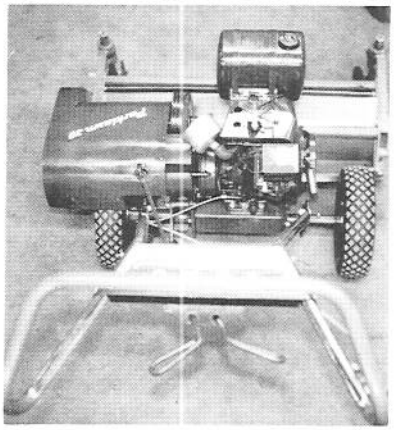

3 START THE ENGINE USING RECOIL STARTER

Open throttle slightly and close choke completely. Crank once to prime. Open choke half way and pull on starter rope. When engine starts, slowly open choke completely. Do not choke if engine is warm. DO NOT CHOKE THE ENGINE REPEATEDLY OR FLOODING OF THE CARBURETOR WILL RESULT. CHECK INSTRUCTIONS IN THE ENGINE MANUAL. Stop the engine with the sparkplug grounding spring.

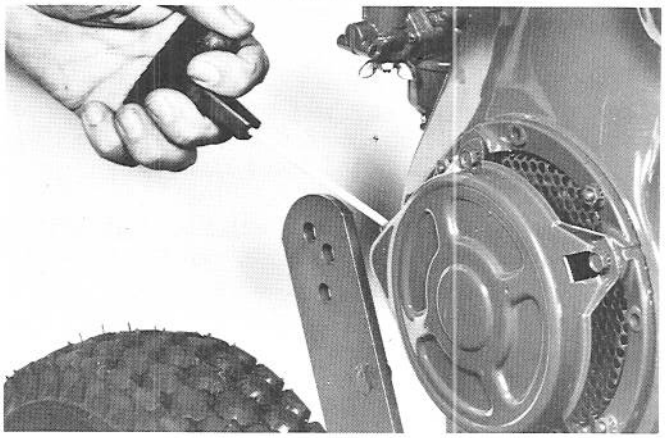

4 OPTIONAL REEL PULLEY

There is an optional reel pulley available (Part #K-46) that will increase the frequency of clip on the mower. V-belt #271 - 96 must be used.

This optional pulley will change the reel ratio from .89 to .70 on the 25" Parklawn and from 1.07 to .84 on the 30" Parklawn.

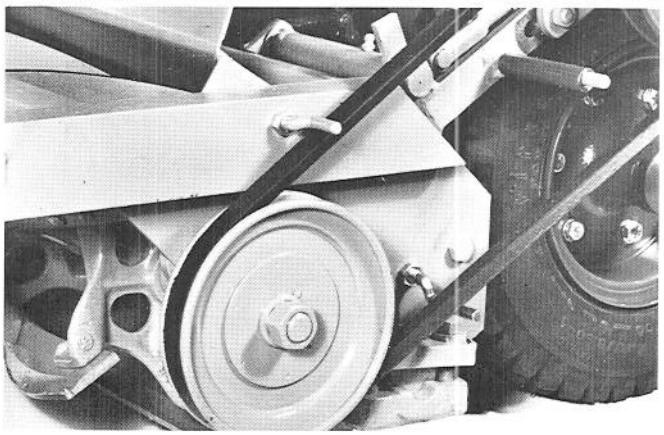

BED KNIFE AND CUTTING HEIGHT ADJUSTMENT

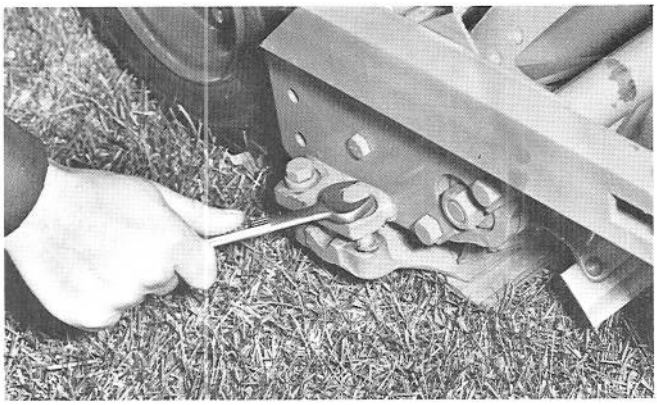

KEEP THE BED KNIFE PROPERLY ADJUSTED

This is the most important adjustment on any reel-type mower, and must be done with great care to insure satisfactory performance. On the Parklawns the bed knife is adjusted to the reel blades by means of two adjusting screws at either end of the knife bar. To bring the bed knife up to proper adjustment, take the following steps:

1. Loosen the REAR adjusting screws and tighten the front adjusting screws as shown at both ends of the knife bar.

2. Bring both ends of the bed knife up until the entire knife is close to, but not touching, the revolving reel.

3. Adjust the left end so that it touches very lightly all along the reel.

IN NO CASE SHOULD THE BED KNIFE BEAR HEAVILY AGAINST THE REVOLVING REEL - To do so will cause loss of power, poor cutting, and will soon destroy the blades and reel bearings.

The mower, when properly adjusted, will cut clean on all blades for their full length, and the reels will revolve freely.

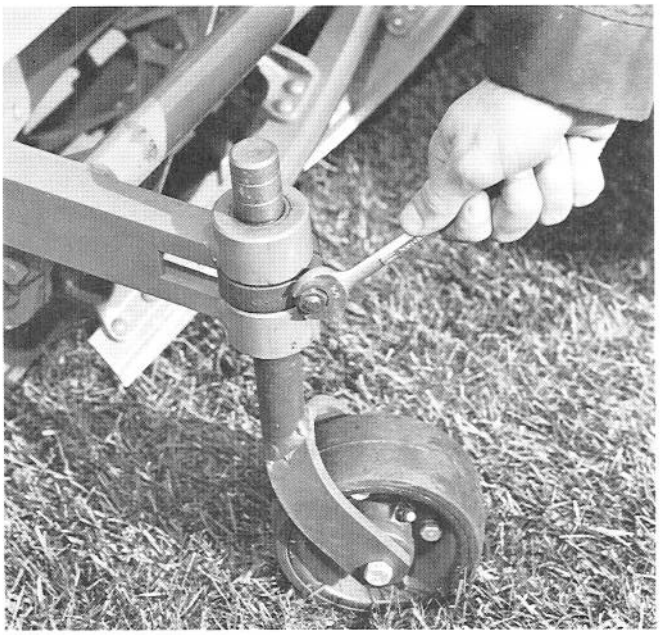

HEIGHT OF CUT

Cutting grass at the proper height for both the type of turf involved and growing conditions is one of the most important features of lawn care. Under most conditions lawns should be clipped at a height of 1 to 1-3/4 inches. Creeping bent grass and fine leaved Bermuda grass make a better lawn cut at 1/2 to 3/4 inch. Lawn grasses should be cut with a frequency that permits clipping off not more than 1/2 inch at a time, preferably as little as 1/4 inch.

Height of cut can be adjusted from 3/8 inch to 2-1/2 inches. This is accomplished by moving the caster fork stems up or down. There are gauge marks on the stems at intervals of 1/2 inch to assist in making the same adjustment for both wheels.

SEAT ADJUSTMENT

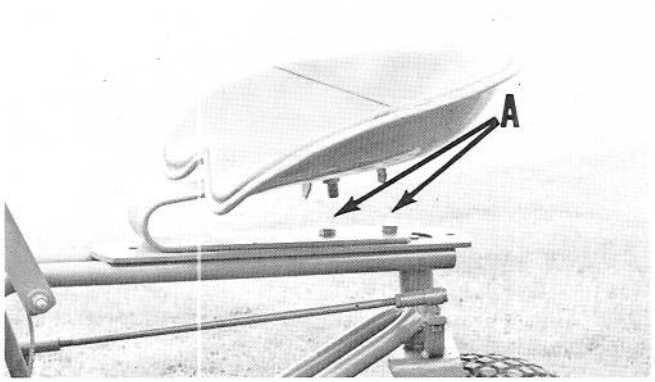

To adjust the seat to the desired position remove screws "A", place seat forward or backward to most comfortable position, and retighten screws.

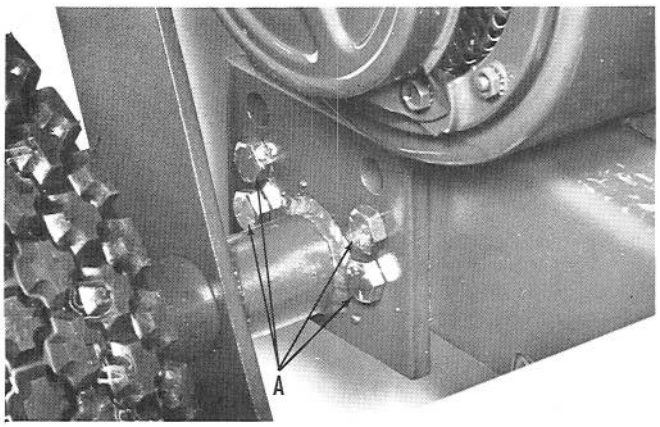

The mower is shipped with the axle set in the normal ($1\frac{1}{4}$" - $2\frac{1}{2}$") height of cut position. For low cuts, 3/8" - $1\frac{1}{4}$", change the engine base attachment to the axle to position "A" as shown.

HOW TO KEEP YOUR MOWER PROPERLY ADJUSTED

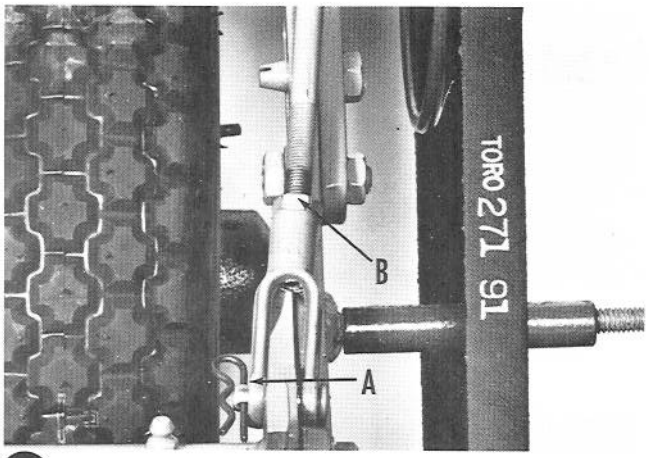

1 ADJUST FOR PROPER TENSION ON REEL BELT

As new belts get worn in, it is necessary to tighten the reel belt adjustment from time to time to prevent excessive wear and poor performance due to slipping.

To tighten the reel belt, first remove the clevis pin "A" from the reel bell crank as shown above. Loosen locknut "B" and unscrew the clevis one or two turns. Then replace the clevis pin and test for adjustment. Adjust as required.

2 REPLACE WORN OR DAMAGED REEL BELTS

To replace the reel belt, release tension on the reel control lever and remove the belt from pulleys. If necessary, remove clevis pin and loosen clevis as in adjustment instructions above to permit fitting the new belt. Be sure the reel belt is installed between the belt guards.

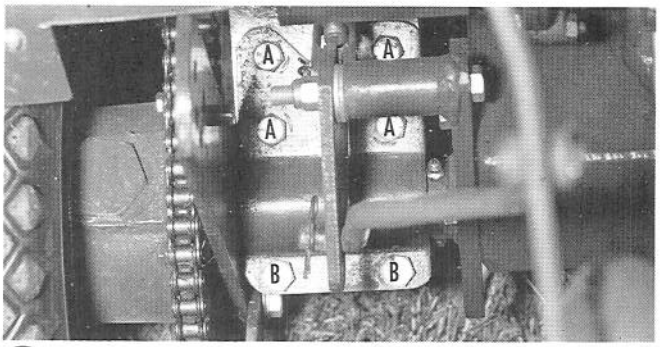

3 KEEP TRACTION CHAIN ADJUSTED PROPERLY

Adjust the traction chain after wear as follows: Loosen the four bolts "A" and nuts, which hold the countershaft housing clamp to the countershaft housing as shown above. These bolts go through slotted holes in the housing, and after they are loosened the housing can be pried away from the axle housing until chain is tight. BE SURE TO ALIGN BOLTS AND HOUSING AFTER ADJUSTING AND TO ALIGN THE REVERSE TRACTION PULLEYS BEFORE TIGHTENING BOLTS.

4 ADJUST FOR NEUTRAL POSITION

The neutral position of the traction drive belt is held by friction of the countershaft housing clamp on the countershaft. If the drive will not stay in neutral, adjust the two bolts "B" to give a firm hold position.

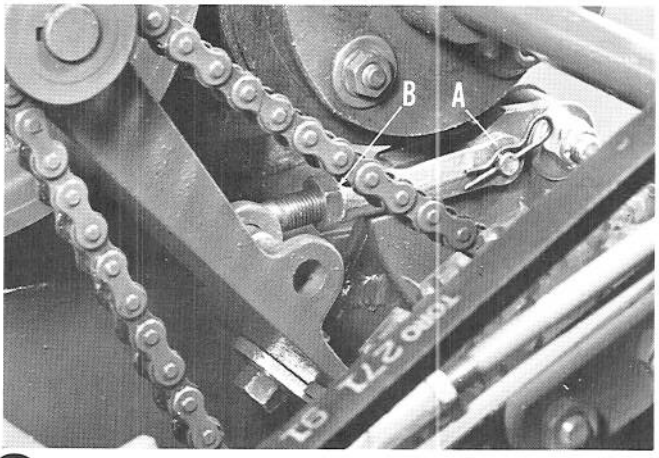

5 MAINTAIN TENSION ON THE TRACTION BELT

Proper adjustment of the traction control lever linkage to the traction drive belt is accomplished by first removing the clevis pin from the clevis located at point "A". This connects to the traction control lever bell crank and can be adjusted by first loosening the lock nut "B" on the shaft in front of clevis and then screwing the clevis in or out, one or two turns, depending on the amount of slack taken up in the traction V-belt.

After adjustment, replace the clevis pin and test for proper belt tension. Adjustment from time to time after initial use becomes necessary as slack accumulates in the traction drive V-belt.

CHECK TO BE SURE THAT TRACTION PULLEYS ARE PROPERLY ALIGNED AFTER ADJUSTMENT AND THAT V-BELT IS INSIDE BELT GUARDS. DO NOT KEEP BELT TOO TIGHT AS THIS WILL CAUSE EXCESSIVE BELT AND BEARING WEAR.

TIRES

Check air pressure at least once each week. Low pressure will damage tires in a short time. Air pressure should be maintained at 15 to 18 pounds at all times. When remounting a tire after maintenance, it should be pumped to 70 pounds pressure, then reduced to correct pressure. This will force the bead of the tire out on the rim preventing tire from slipping on the rim.

CAUTION!

DO NOT ATTEMPT TO WORK ON CUTTING UNIT WHILE ENGINE IS RUNNING.



WHEN THERE IS NEED TO TRANSPORT MOWER BY MOTOR VEHICLE, WE RECOMMEND DRAINING OF ALL GASOLINE AND OIL FROM THE MOWER ENGINE TO ELIMINATE FIRE HAZARD OR POSSIBILITY OF SPILLAGE.

MAIN FRAME & REEL ASSEMBLY

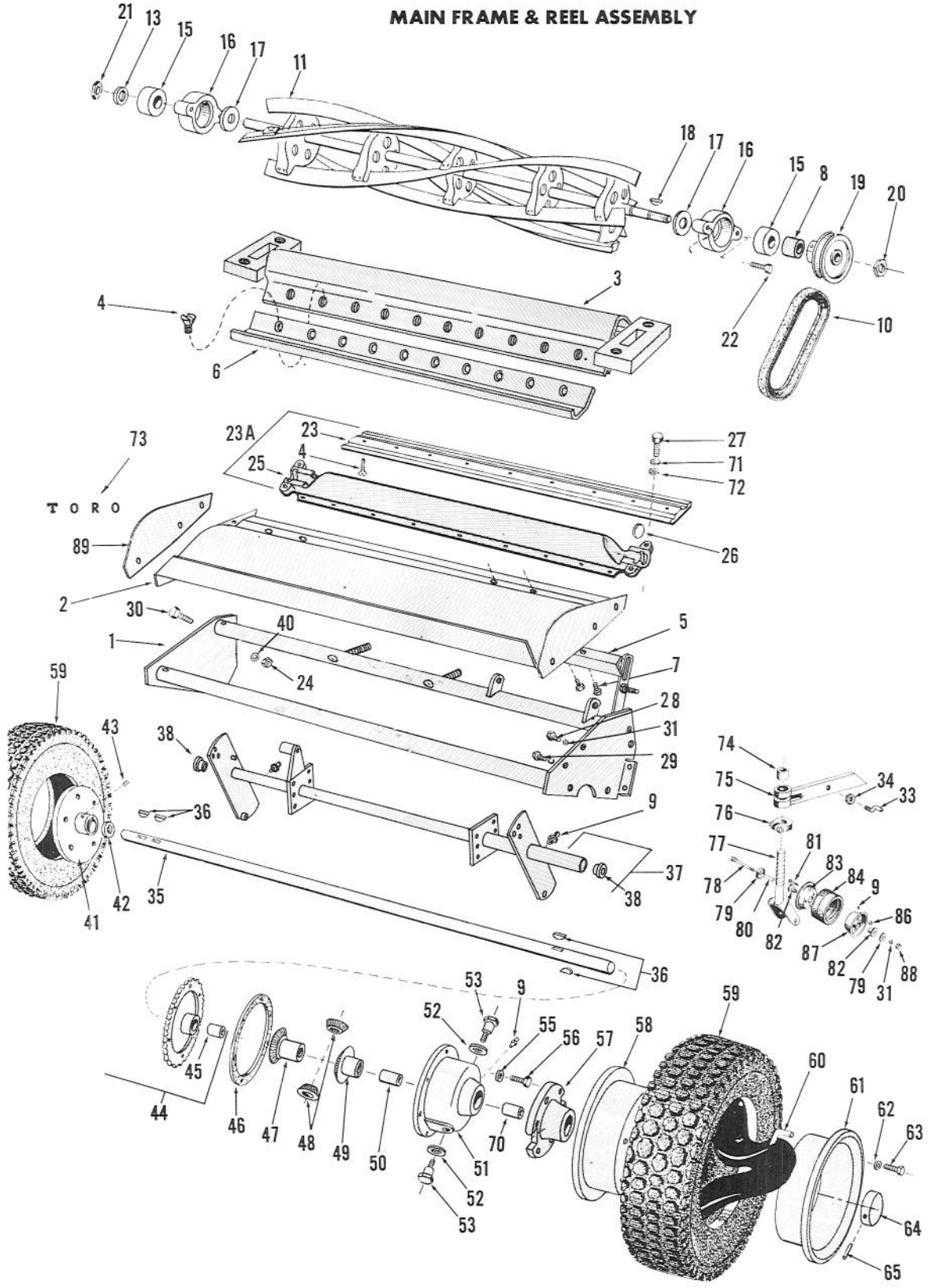

Drawing No. 8100-10

PARTS LIST

Ref. No.	Part No.	Description	No. Used
1	3-5880	Frame - Mower (25")	1
1	3-5940	Frame - Mower (30")	1
2	3-6080	Grass Shield (25")	1
2	3-6090	Grass Shield (30")	1
3	3-6210	Bed Bar (25")	1
4	CU-110B	Screw, Bed Knife (30")	11
4	CU-110B	Screw, Bed Knife (25")	10
5	3-6100	Grass Shield Lower (25")	1
5	3-6110	Grass Shield Lower (30")	1
6	3-4362	Bed Knife (25")	1
7	32140-31	Screw	4
8	3-4291	Spacer	1
9	302-5	Grease Fitting	5
10	271-91	V-belt	1
*	271-96	V-belt	1
11	3-5960	Reel Assembly (25")	1
11	3-6890	Reel Assembly (30")	1
13	3256-28	Washer	1
15	251-13	Bearing	2
16	K-207	Bearing Housing	2
17	5P-18	Slinger, Reel Bearing	2
18	3257-3	Key, Woodruff	1
19	3-2961	Pulley	1
*	K-46	Pulley	1
20	3219-6	Jam Nut	1
21	3220-6	Nut	1
22	K-208	Screw	4
23	3-4782	Bed Knife (30")	1
24	3217-7	Nut	6
25	RG-75C	Bed Bar (30")	1
26	RG-76A	Pivot, Knife Bar	2
27	M-68	Screw, Adjusting	4
28	3274-27	Soc. Hd. Capscrew	2
29	323-4	Capscrew	2
30	323-4	Capscrew	6
31	3253-5	Lockwasher	6
33	3-4356	Bolt, Belt Ret. - Short	1
33	3-4357	Bolt, Belt Ret. - Long	1
34	3220-2	Jam Nut	2
35	3-4253	Axle (25")	1
35	3-4254	Axle (30")	1
36	3257-4	Key, Woodruff	4
37	3-6000	Axle Hsg. w/Bushings (25")	1
37	3-6010	Axle Hsg. w/Bushings (30")	1
38	K-31	Bushings	2
40	3254-6	Washer S. P.	6

Ref. No.	Part No.	Description	No. Used
41	K-38	Wheel Hub, Rt.	1
42	PM-348	Washer	1
43	3246-4	Setscrew	1
44	KK-46	Sprocket, Diff. w/Bushing	1
45	JT-766	Bushing	1
+46	3P-11	Gasket	1
47	K-35	Gear, Diff. Side, Rt.	1
48	K-86	Pinion, Diff.	2
49	K-36	Gear, Diff. Side	1
50	PS-220	Bushing	1
51	K-85	Differential Case	1
52	3P-10A	Lockwasher	2
53	3P-9A	Spindle, Diff. Pinion	2
55	3253-3	Lockwasher	6
56	321-4	Screw	6
57	2-4349	Wheel Hub, Left	1
58	Q-372-2	Wheel Disc	2
59	231-17	Tire, 3.50 x 6	2
*	234-11	Tire, Semi-pneumatic	2
60	232-8	Tube, 3.50 x 6	2
61	Q-372-1	Wheel Disc	2
62	3254-2	Washer	12
63	322-3	Screw	12
64	3-1158	Hub Cap	2
65	32121-32	Roll Pin	2
70	PM-349	Bushing	1
71	PL-135	Upper Washer	4
72	LU-91	Lower Washer	4
73	3-4094	Decal	1
74	256-46	Bushing	4
75	2-4089	Caster Brkt., Left	1
75	2-4099	Caster Brkt., Right	1
76	PK-43	Clamp Assembly	2
77	PK-42	Caster Wheel Fork	2
78	3211-15	Screw	2
79	PL-111	Slinger	4
80	PK-40	Sleeve	2
81	329-4	Screw	10
82	256-34	Bushing	4
83	PK-48A-2	Wheel Disc	2
84	PK-47	Tire	2
86	3253-3	Lockwasher	10
87	PK-48A-1	Wheel Disc	2
88	3220-3	Nut, Jam	2
89	3-5006	Shim, 14 ga.	0-1
*	3-5007	Shim, 16 ga.	0-1

* Accessory Item, Not Illustrated

\+ For repair, be sure to note number of gaskets used -- Replace with same amount when re-assembling.

ENGINE & CONTROLS ASSEMBLY

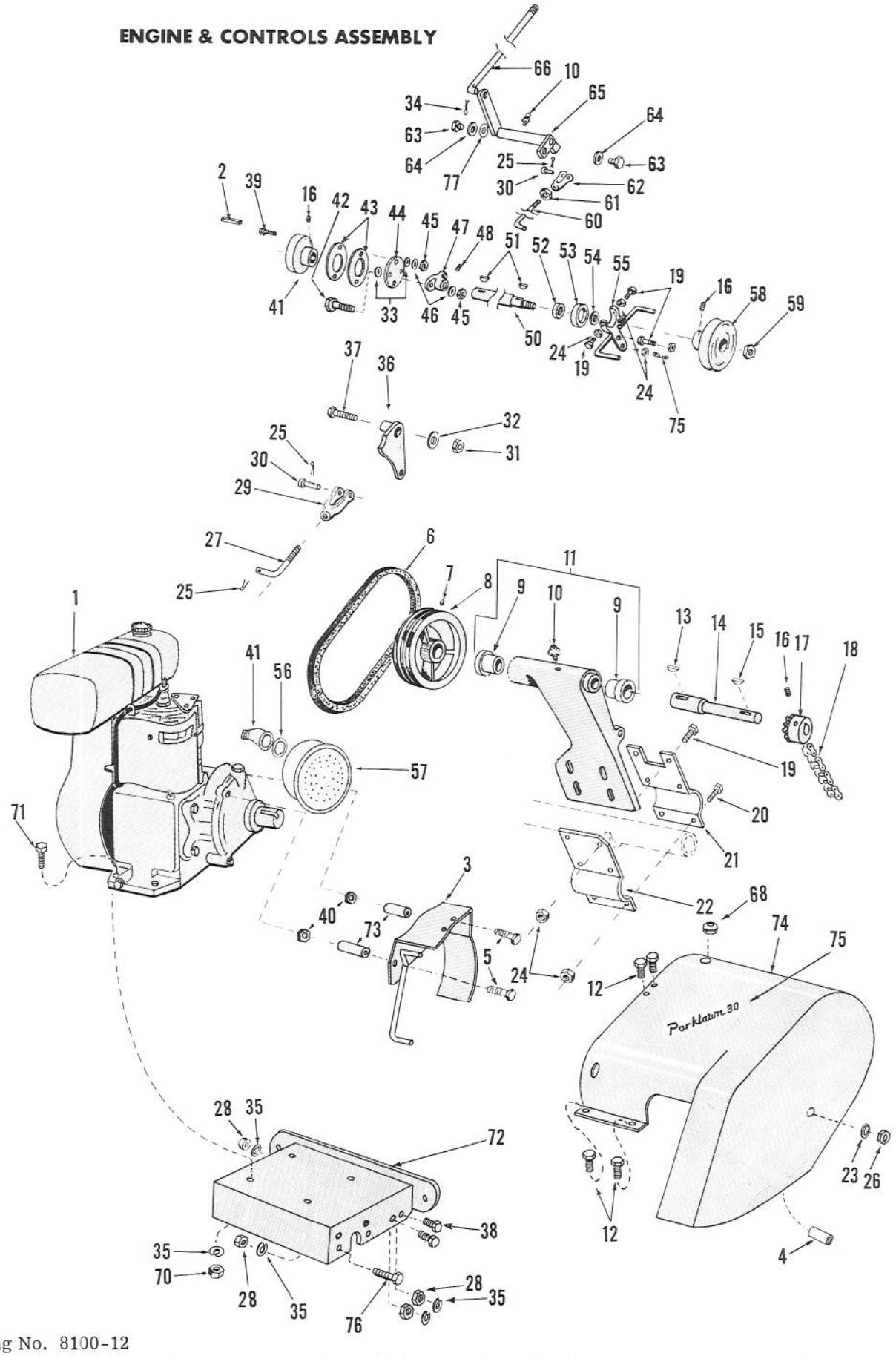

Drawing No. 8100-12

PARTS LIST

Ref. No.	Part No.	Description	No. Used
1	221-208	Engine (25")	1
1	221-209	Engine (30")	1
2	3-4771	Key	1
3	3-6310	Belt Guard	1
4	3-4288	Spacer	1
5	329-10	Screw	2
6	3-4733	V-belt	1
7	3246-2	Setscrew	1
8	3-4372	Pulley	1
9	256-34	Bushing	2
10	302-5	Grease Fitting	2
11	2-4389	Housing, Ctshft. & Bushings	1
12	32140-31	Screw	4
13	3257-5	Key, Woodruff	1
14	3-4251	Counter Shaft	1
15	3257-3	Key, Woodruff	1
16	3246-4	Setscrew	2
17	K-53	Sprocket	1
18	3-4734	Chain	1
19	3211-4	Screw	4
20	3211-5	Screw	2
21	K-181	Clamp - Upper, Co. Shft. Hsg.	1
22	K-182	Clamp - Lower, Co. Shft. Hsg.	1
23	3253-4	Lockwasher	1
24	3220-3	Jam Nut	10
25	3290-250	Hairpin Cotter	1
26	3217-6	Nut	1
27	3-4406	Release Link	1
28	3217-7	Nut	14
29	282-7	Clevis	1
30	283-1	Clevis Pin	
31	3296-6	Stop Nut	1
32	3256-4	Cut Washer	1
33	3256-3	Cut Washer	8
34	3272-10	Cotter Pin	
35	3253-5	Lockwasher	14
36	3-4407	Bellcrank	1
37	3-5038	Screw	1
38	323-6	Screw	4
39	322-13	Screw	2
40	3296-3	Nut	2
41	3-4348	Pulley	1

Ref. No.	Part No.	Description	No. Used
42	322-4	Screw	2
43	3-1562	Driving Disc	2
44	KP-54	Disc, Coupling	1
45	3218-2	Nut, Jam	4
46	3254-2	Washer, Shakeproof	4
47	K-49	Coupler	1
48	3246-3	Setscrew	2
49	2811-9	Elbow, Muffler	1
50	3-4252	Shaft	1
51	3257-5	Key, Woodruff	2
52	251-7	Bearing	1
53	K-50	Cup, Bearing	
54	PM-328	Washer	1
55	3-5970	Bearing Bracket	1
56	3290-153	Locknut, Conduit	1
57	2212-8	Muffler	1
58	3-2945	Pulley	1
59	3220-6	Jam Nut	1
60	3-4342	Adj. Link	1
61	3220-2	Jam Nut	1
62	282-2	Clevis	1
63	K-63	Screw, Pivot	2
64	3254-4	Lockwasher, Shakeproof	2
65	3-6200	Bellcrank	1
66	3-4343	Control Rod, Reel	1
68	3-4408	Grommet	1
69	3253-4	Lockwasher (25")	4
69	3253-5	Lockwasher (30")	4
70	3219-2	Nut (25")	4
70	3219-3	Nut (30")	4
71	3210-9	Capscrew, Eng. Base - Front (25")	2
71	3210-7	Capscrew, Eng. Base - Rear (25")	2
71	3211-4	Screw, Eng. Base (30")	4
72	3-5950	Engine Base	1
73	3-2074	Spacer	2
74	3-6300	Shroud	1
75	3-4092	Decal (25")	1
75	3-4093	Decal (30")	1
76	323-6	Screw	8
77	3290-211	Spring Washer	2

INSIST ON GENUINE TORO PARTS

IMPORTANT ORDERING INSTRUCTIONS

To insure getting correct parts without delay, please furnish the following information:

1. Serial number of your mower as shown on the name plate.
2. Part number, description and quantity of each part required.
3. State whether parts should be shipped by mail or express. All repair parts are shipped F.O.B. factory.
4. Name and address where parts are to be shipped.
5. Do not order by reference number; use part number only.
6. Repair parts are available from your Toro distributor or dealer.

SULKY ASSEMBLY

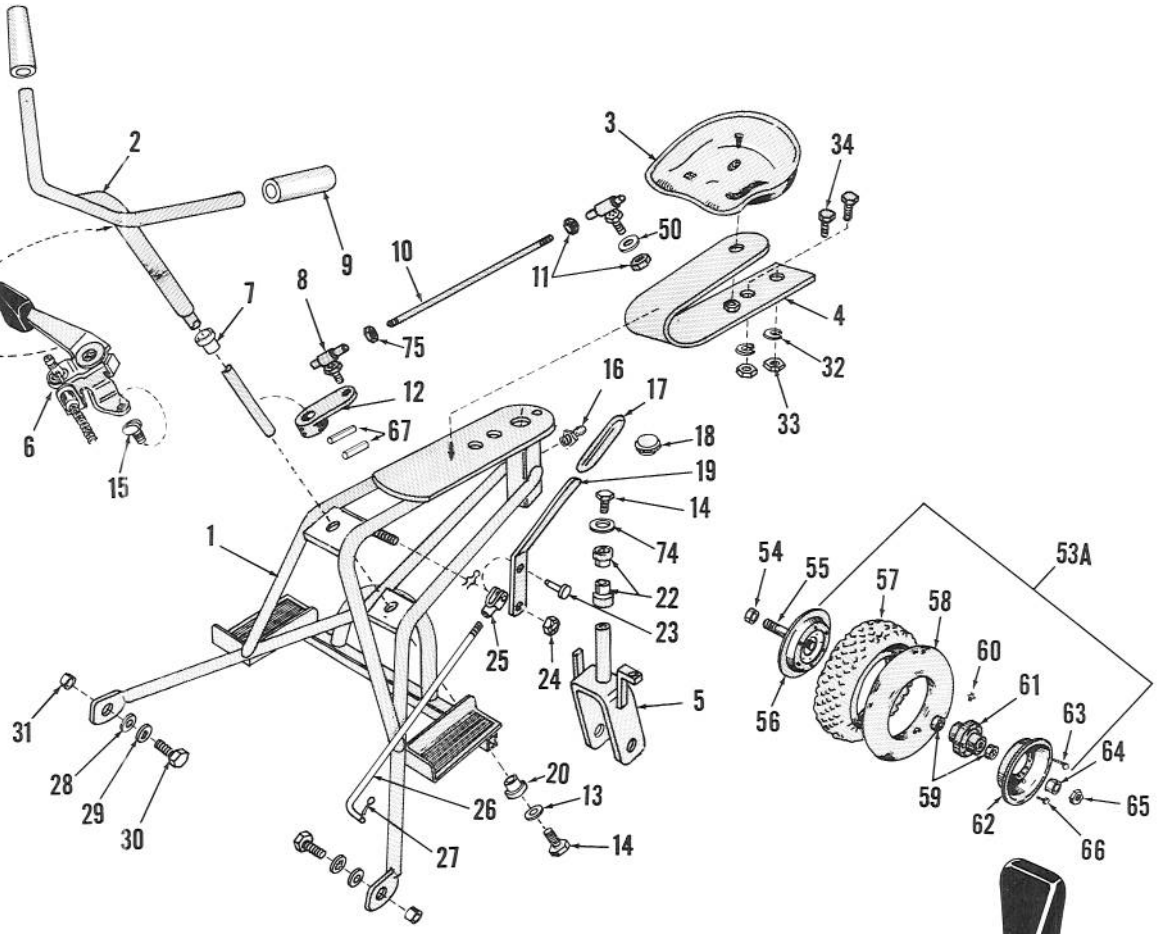

HANDLE ASSEMBLY

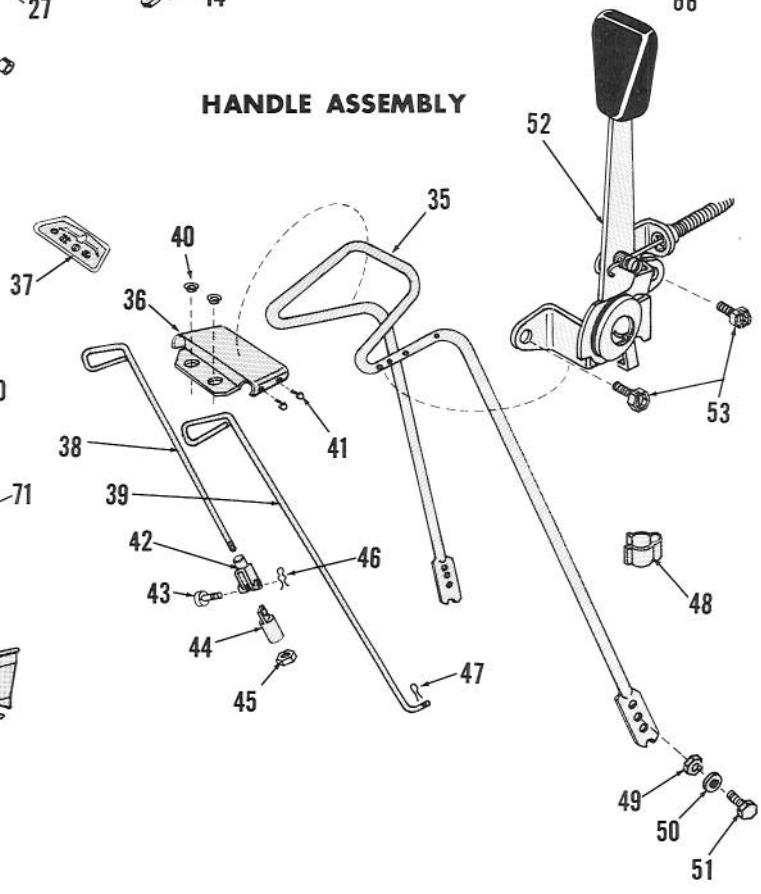

GRASS CATCHER

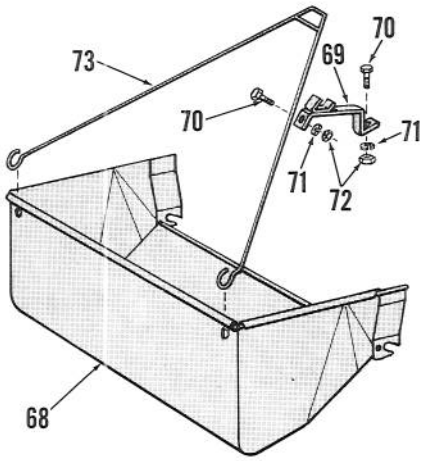

Drawing No. 8100-14

PARTS LIST

Ref. No.	Part No.	Description	No. Used
1	3-6150	Frame w/Bushings	1
2	3-6120	Handle Bar	1
3	351-3	Seat Assy. w/Nut & Bolt	1
4	3-1871	Seat Spring	1
5	3-6140	Fork	1
6	3-4391	Throttle Control - Sulky	1
7	256-117	Bushing - Upper	1
8	2411-5	Ball End, Right Hand Thread	1
8	2411-9	Ball End, Left Hand Thread	1
9	3-4991	Handle Grip	2
10	3-4634	Linkage Rod	1
11	3220-3	Jam Nut	3
12	3-4365	Pivot	1
13	4-8620	Washer	1
14	329-2	Screw	2
15	3251-1	Screw	2
16	302-5	Grease Fitting	1
17	3-4988	Handle Grip	1
18	233-10	Knob	1
19	3-6130	Handle - Traction Control	1
20	256-104	Bushing - Lower	1
22	256-132	Bushing - Fork	2
23	283-1	Clevis Pin	1
24	3296-28	Stop Nut	1
25	282-1	Clevis	1
26	3-4633	Control Rod	1
27	3272-6	Cotter Pin	2
28	3256-5	Cut Washer	2
29	3253-6	Lockwasher	2
30	3212-2	Screw	2
31	3-4304	Spacer	2
32	3253-5	Lockwasher	2
33	3219-3	Hex Nut	2
34	3211-4	Screw	2
*	3-4635	Shield	1
*	321-2	Screw	2
*	3290-158	Nut, Keps	2
35	3-4373	Handle with Grip	1
36	3-6230	Escutcheon Plate	1
37	3-4331	Decal	1

* Not Illustrated

Ref. No.	Part No.	Description	No. Used
38	3-4358	Control Rod - Reel	1
39	3-4361	Control Rod - Traction	1
40	3-4408	Grommet	2
41	32104-70	Screw	4
42	282-7	Clevis	1
43	283-2	Clevis Pin	1
44	3-4344	Connecting Link	1
45	3219-3	Jam Nut	1
46	3272-6	Cotter Pin	1
47	3272-10	Cotter Pin	1
48	3-2556	Clip	2
49	3217-7	Nut	2
50	3253-5	Lockwasher	4
51	323-6	Screw	2
52	3-4387	Throttle Control - Handle	1
53	32122-29	Screw	2
53A	241-54	Wheel Assembly	1
54	3-4353	Spacer	1
55	3-5037	Axle	1
56	241-31	Disc Less Valve Hole	1
57	231-17	Tire	1
58	232-8	Tube	1
59	251-34	Bearing	2
60	302-4	Grease Fitting	1
61	242-13	Hub	1
62	241-36	Disc With Valve Hole	1
63	321-8	Screw	6
64	3-4354	Spacer	1
65	3296-15	Stop Nut	1
66	323-4	Screw	6
67	32121-12	Roll Pin	2
68	3-6940	Grass Catcher W. A. - 25"	1
68	3-6970	Grass Catcher W. A. - 30"	1
69	3-6950	Bracket W. A.	1
70	329-3	Capscrew	2
71	3253-3	Lockwasher	2
72	3219-1	Nut	2
73	PL-281-A	Bail	1
74	4-2320	Washer	1
75	3220-16	Jam Nut L.H.	1

INSIST ON GENUINE TORO PARTS

RECOIL STARTER

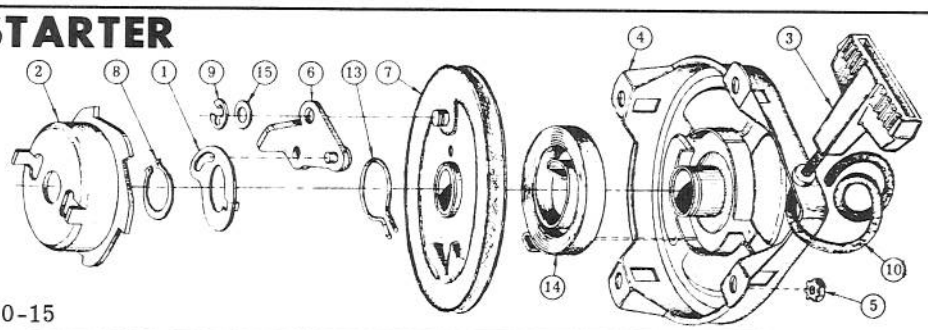

Drawing No. 8100-15

Ref. No.	Description	Old No.	IBM No.	Qty.
1	Actuator	P90873	157-2	1
2	+Cup Starter	P90871	265-10	1
3	Handle	P90160	121-6	1
4	Hsg., Incl. Recoil Spr.	P90844-B	124-6-5	1
5	+Nut & L'washer Assy.	4107-A	183-25-5	4
6	Pawl & Pin Assy.	P90868-A	157-129-5	1
7	Pulley Assembly	P90919	219-28-5	1

Ref. No.	Description	Old No.	IBM No.	Qty.
8	Ring Retaining	401859	232-66	1
9	Ring Retaining	P90928	232-35	1
10	Rope	P90361	246-7	1
*11	+Screen	90872	257-30	1
14	Spring, Recoil	P90864	263-79	1
15	Washer	5983	304-320	1

* Not Illustrated

+ Indicates parts not included with Recoil Assembly

Part Nos. listed for identification only - To obtain parts, contact your local Clinton dealer.

25" PARKLAWN ENGINE DRAWING

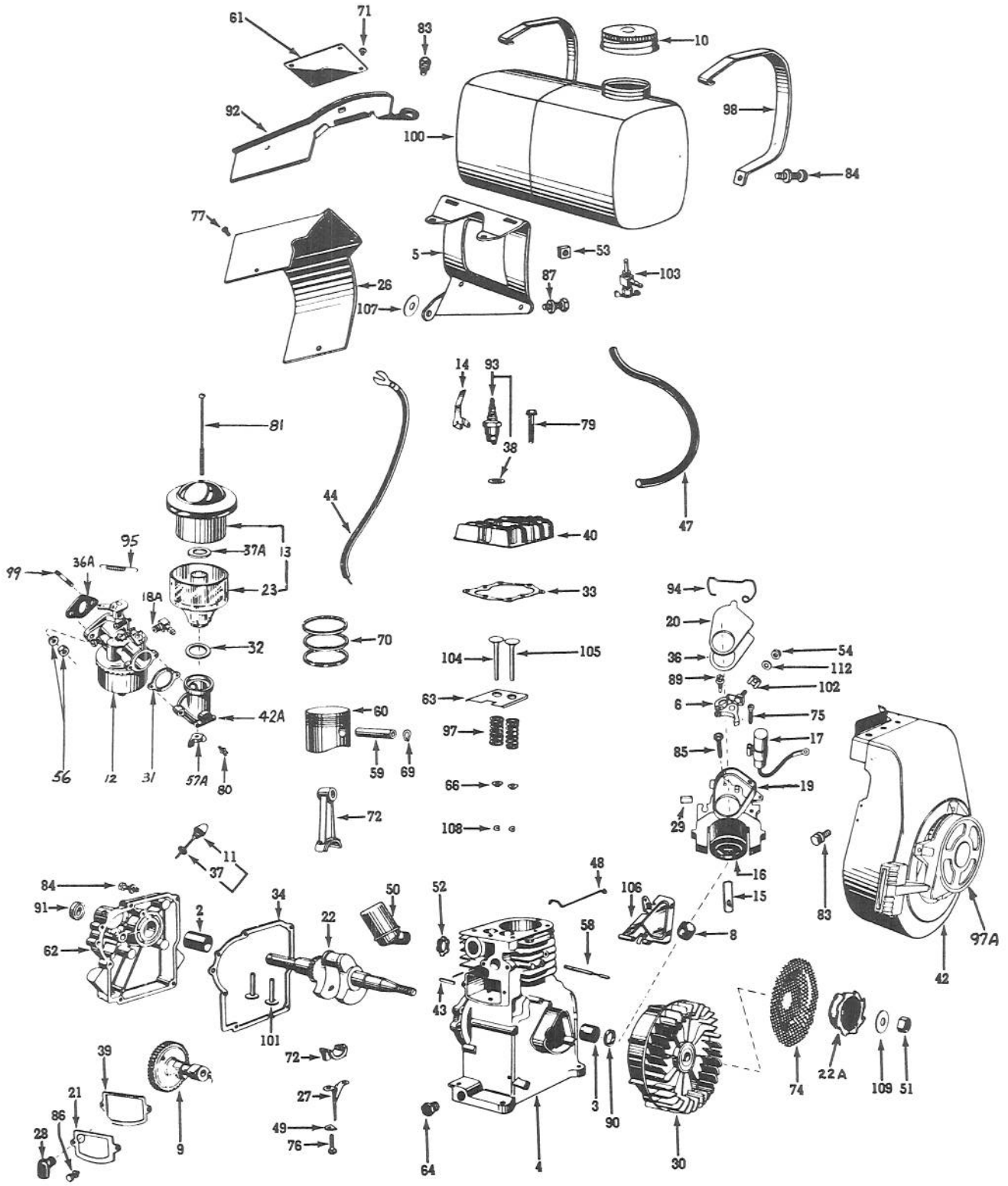

Drawing No. 8100-16

ENGINE PARTS LIST

25" PARKLAWN

Ref. No.	Description	IBM No.	Part No.	Qty.
2	Bearing, Sleeve (Plate Assembly)	20-56	21016	1
3	Bearing, Main Sleeve (Cylinder Block) Service Bearing	20-58	90278	1
*3A	Bearing, Camshaft, 1-Block, 1-Bearing Plate	20-10	90281	2
4	Block Assembly, Cylinder Note: Assembly Incl. Ref. Nos. 3, 3A & 90	22-196-5	90275-A	1
5	Bracket, Fuel Tank Mounting	26-55-5	21352	1
*5A	Bracket, Remote Control Clamp	26-628		1
6	Breaker Points Assembly	135-6-5	5735	1
*7	Breather Assembly	29-32-5		1
8	Cam, Magneto Breaker	157-29	5751	1
9	Camshaft	6-338	91608	1
10	Cap & Gasket Assembly, Fuel	45-95-5	3059	1
11	Cap & Gasket Assembly, Oil Filler	45-110-5	21074-A	1
12	Carburetor Assembly, Float	39-812-5		
*12A	Clamp, Remote Control	81-13	31463	1
13	Cleaner Assembly, Air	2-165-5		1
14	Clip, Ignition Shorting	266-28	3499	1
15	Clip, Coil Holding	81-20	5734	1
16	Coil, Magneto (Without Laminations)	135-13-5	5770	1
17	Condenser, Magneto	135-29-5	5589-A	1
*18	Connector, Breather	69-269	91996	1
18A	Connector, Fuel Line	69-281		1
19	Core & Breaker Box Assembly	135-37-5	5732	1
*19A	Cover, Filter Assy. Air	45-393		1
20	Cover, Dust, Magneto Breaker Points	45-15	5743	1
21	Cover, Valve Chamber	45-304	91466	1
22	Crankshaft	46-417	31306-1	1
22A	Cup, Starter	265-10	90871	1
23	Cup, Air Cleaner	2-48	4513	1
*	Decal, Kit Horsepower	149-548		1
26	Deflector, Air Cylinder	259-56	90504	1
27	Distributor, Oil	220-147		1
28	Elbow, Breather	69-23	90610	1
29	Felt, Lubrication, Cam Follower	94-189	5742	1
30	Flywheel Assembly, With Magnets	83-10-5	5752-A	1
31	Gasket, Horn to Carb	94-11	10259	1
32	Gasket, Air Cleaner to Air Horn	94-516		1
33	Gasket, Cylinder Head	94-48-99	10253	1
34	Gasket, Bearing Plate, .015 Standard	94-107	10254	1
	Available in .010 Size	93-107	10254-1	1
35	Gasket, Asbestos (Manifold to Block)	94-31	6002	1
36	Gasket, Cover, Dust (Breaker Points)	92-241	5744	1
36A	Gasket, Manifold to Carburetor	92-515		1
37	Gasket, Oil Filler Cap	94-81	3297	1
37A	Gasket, "O" Ring, Cover to Element	94-88	4515	1
38	Gasket, Spark Plug	94-90	3115	1
39	Gasket, Valve Chamber Cover to Breather, Breather to Block	94-103	10251	2
*	Gasket Kit, Engine Overhaul	149-586		1
40	Head, Cylinder	122-17	31011	1
42	Housing Assembly, Blower	259-123-5	21014-A	1
42A	Horn, Air	69-40	3991	1
43	Key, Flywheel	148-4	10339	1
44	Lead, Hi-Tension, Magneto	307-194-99	90761	1
*45	Lever, Speed Adjusting	157-391		
47	Line, Flexible Fuel	158-25	6316	1
*47A	Line, Breather	158-66	7951	1
48	Link, Carburetor to Air Vane	159-148		1
49	Lock, Connecting Rod Screw	148-13	31018	1
*	Magneto Assembly	268-17-5	90170	1
*49A	Mandrel, Breather	69-69	10353	1

* Not Illustrated

Part Nos. listed for identification only - To obtain parts, contact your local Clinton dealer.

ENGINE PARTS LIST -Continued

25" PARKLAWN

Ref. No.	Description	IBM No.	Part No.	Qty.
*49B	Manifold Assembly	169-90-5		
51	Nut (Starter Cup)	183-68-99	5942	1
53	Nut, Square (Tank Straps)	183-1	5450	2
54	Nut, Terminal Condenser Lead	183-21	5740	1
56	Nut & L'washer Assy. (Carb. Mounting) (Manifold to Block)	183-29-5	3255-A	4
*57	Nut & L'washer Assy., Recoil Starter	183-25-5	4107-A	4
57A	Nut, Wing Air Cleaner	183-66	7044	1
58	Pin, Pivot, Air Vane Governor	203-91	90982	1
59	Pin, Wrist	203-65	7923	1
60	Piston Assembly, Standard	204-13-5	31001-A	1
	Note: Piston Assemblies are available in the following oversizes:			
	IBM Part No. Oversize Listed			
	Order by part no. & specify oversize .010	206-13-5	31001-A	
	Note: Piston Assy. Incl. Ref. Nos. 59-70 .020	207-13-5	31001-A	
61	Plate, Name	58-105	6530	1
62	Plate Assembly, Bearing	215-52-5	10047-A	1
63	Plate, Valve Spring Retainer	215-136	10013	1
64	Plug, (Oil Drain)	216-19	3289	2
65	Reducer, 6:1 Order Individual Parts Only Mounted at 3:00 O'Clock Position		3800	1
66	Retainer, Valve Spring	304-135	3028	2
69	Ring, Retainer, Wrist Pin	232-41	6034	2
70	Ring Set, Standard	149-10	10023	1
	Note: Ring Sets are also available in the following oversizes:			
	IBM Part No. Oversize Listed .010	149-158	10023	
	Order by part no. & specify oversize .020	149-159	10023	
71	Rivet, Tubular (Name Plate)	244-21	5460	4
72	Rod Assembly, Connecting	245-102-5	31002-A	1
	Note: Assembly Incl. Ref. Nos. 49 & 76			
74	Screen, Rotating	257-30	90872	1
75	Screw (Condenser to Plate)	258-299	5741	1
76	Screw (Connecting Rod Cap)	258-9	3235	2
77	Screw (Deflector to Block)	258-81	5644	2
79	Screw (Cylinder Head to Block)	258-88	5654	8
80	Screw (Air Horn to Carburetor)	258-105	5677	2
81	Screw, Air Cleaner to Air Horn	258-163	6119	
83	Screw & L'washer Assy. (Blower Hsg. to Block)	258-280-5	3205-G	2
84	Screw & L'washer Assy. (7-Bearing Plate to Block) (2-Tank Straps)	258-254-5	5613-G	9
85	Screw & L'washer Assy. (Laminations to Block)	258-108-5	5682-A	2
86	Screw & L'washer Assy. (Valve Chamber Cover)	258-82-5	5645-A	2
89	Screw & L'washer Assy. (Breaker Pts. to Brkr. Box)	258-297-5	5737	1
84	Screw & L'washer Assy. (Fuel Tank Straps)	258-244-5	5422-A	2
*89A	Screw & L'washer Assy. (Speed Adj. Lever)	258-247-5	5443-D	1
*89B	Screw & L'washer Assy. (Remote Control Bracket)	258-81-5	5644-A	2
90	Seal, Oil (Block)	94-178-99	10012	1
91	Seal, Oil (Bearing Plate)	94-163	3136	1
92	Shield, Flywheel	259-318	90502	1
93	Spark Plug & Gasket Assembly (H-10)	267-28-5	16303-A	1
94	Spring, Breaker Box Cover	263-10	5745	1
95	Spring, Speed Adj.	232-348		1
97	Spring, Valve	263-92	3068	2
97A	Starter Assembly, Recoil	265-28-5	13516	1
98	Strap, Fuel Tank	26-165		2
99	Stud, Carburetor Mounting (Carb. to Manifold)	24-11	5659	4
100	Tank Assembly, Fuel	277-59-5	12051	1
101	Tappet, Valve	278-5	10009	2
102	Terminal, Jamtite Breaker Points	307-230	5738	1
103	Valve, Fuel Shut-Off, Flexible Line	273-37	5051	1

* Not Illustrated

Part Nos. listed for identification only - To obtain parts, contact your local Clinton dealer.

ENGINE PARTS LIST - Continued

25" PARKLAWN

Ref. No.	Description	IBM No.	Part No.	Qty.
104	Valve, Exhaust	291-8-99	10301	1
*	Valve, Exhaust, .010 Oversize	292-20-99	10321	1
105	Valve, Intake	291-9-99	10302	1
*	Valve, Intake, .010 Oversize	292-7-99	10322	1
106	Vane, Air Governor	107-12	10393	1
*	Vane, Air, Retaining Ring	232-5	4430	1
*	Vane, Air, Pivot Bushing	28-1	7239	2
*	Vane, Air, Pivot Pin	203-32	7238	1
*	Vane, Air, Compression Spring	263-28	10005	1
107	Washer, Tank Bracket to Block	304-134	3278	1
108	Washer, "C" Valve Keeper	304-90	3291	2
109	Washer, Starter Cup	304-5	5879	1
112	Washer, Terminal Condenser Lead	304-290	5739	1
*113	Washer, Wave (Speed Adj.)	304-145	7469	1

* Not Illustrated

REDUCTION ASSEMBLY

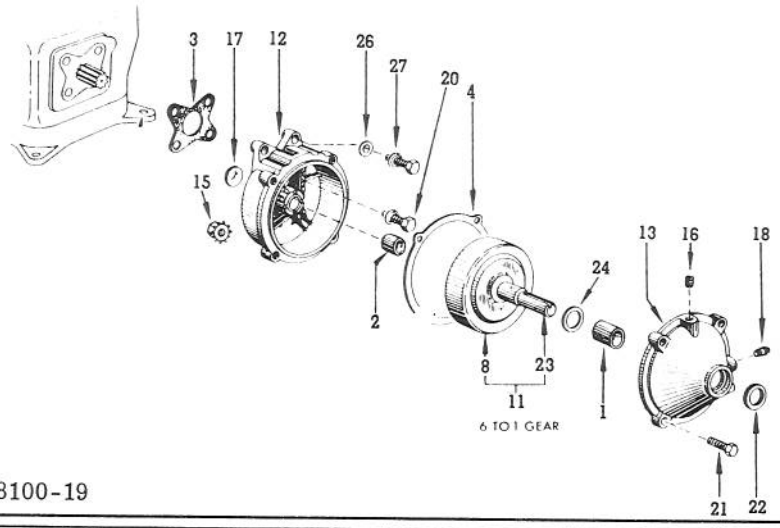

Drawing No. 8100-19

Ref. No.	Description	Part No.	Qty.
1	*Bearing, Sleeve	3806	1
2	*Bearing, Sleeve	3807	1
3	Gasket, Inner Housing to Block	3808	1
4	Gasket, Inner & Outer Housing	3810	1
8	Gear, Reducer, 6:1 (Internal Gear Teeth)	3881-1	1
11	Gear & Shaft Assy., 6:1 (Incl. Ref. Nos. 8 & 22)	3818	1
12	Housing Assembly, Inner (Incl. Ref. Nos. 2 & 16)	3819	1
13	Housing Assembly, Outer (Incl. Ref. Nos. 1 & 21)	4220	1
15	Nut & L'washer Assy.	3255-A	4
16	Plug, Breather	3809-1	1
17	Plug, Expansion	3811	1
18	Plug, Oil Level	3816	1
20	Screw	5896	4
21	Screw	3235	4
22	Seal, Oil	3026	1
23	Shaft, Reducer Gear	3805	1
24	Washer, Thrust	3812	1
26	Washer, Flat	3276	4
27	Lockwasher	5995	4

*Replacement bearings must be reamed after assembly.

Part Nos. listed for identification only - To obtain parts, contact your local Clinton dealer.

30" PARKLAWN ENGINE DRAWING

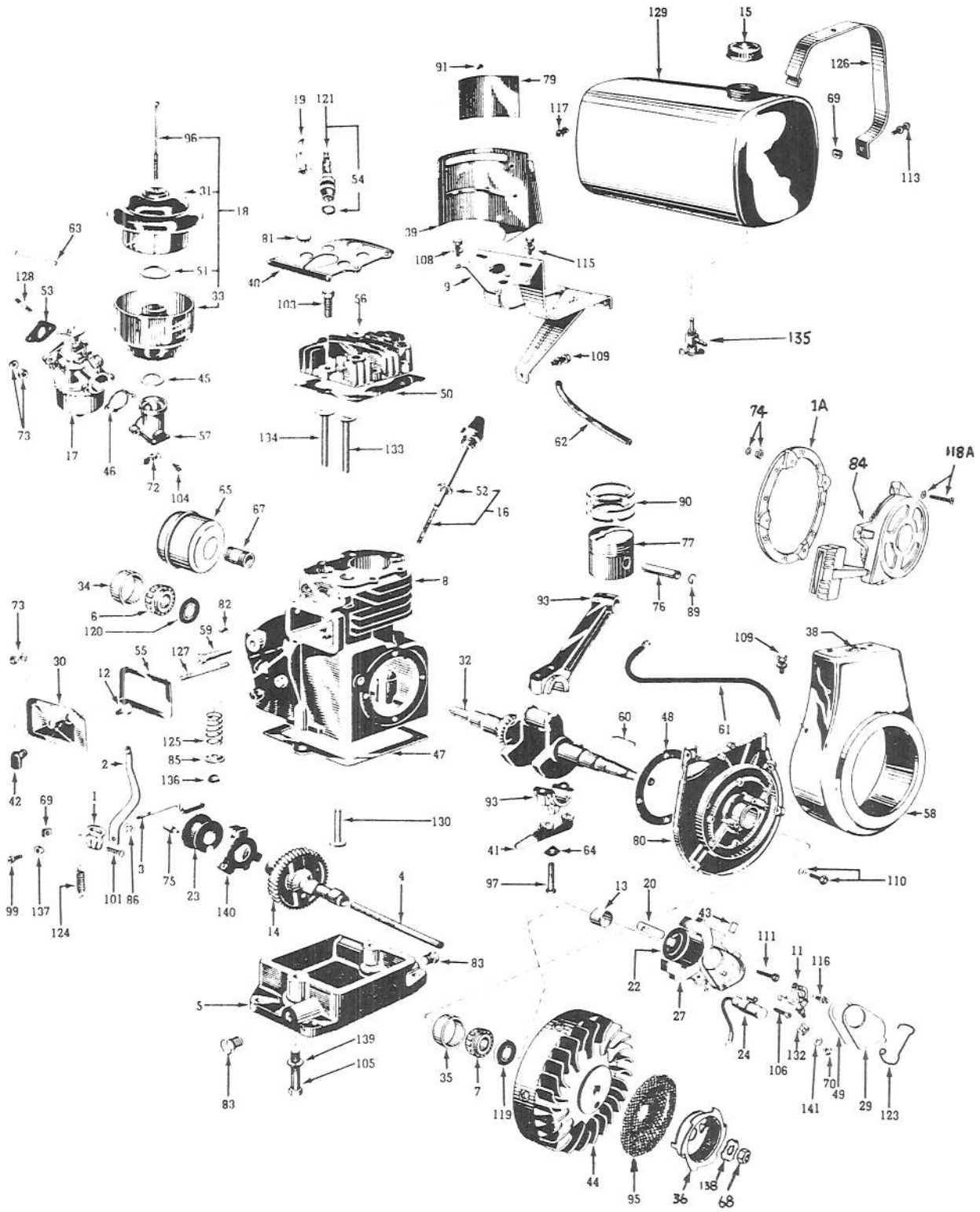

Drawing No. 8100-20

ENGINE PARTS LIST

30" PARKLAWN

Ref. No.	Description	IBM No.	Part No.	Qty.
1A	Adaptor, Recoil Starter	900-152	90989	1
1	Arm, Governor Adjusting	107-4	90505	1
2	Arm, Governor Throttle	157-393		1
3	Arm & Weight Assy., Governor (Incl. Ref. No. 86)	6-370-5	92188-A	1
4	Axle, Camshaft	6-30	3593-A	1
5	Base, Engine	18-4	5040	1
6	Bearing, Cone (P. T. O. End)	20-14	12305	1
7	Bearing, Cone (Bearing Plate)	20-13	12303	1
8	Block Assembly, Cylinder	22-726-5		1
9	Bracket, Fuel Tank Mounting	26-39	12059	1
11	Breaker Points Assembly, Magneto	135-6-5	5735	1
12	Breather Assembly	260-13	6354	1
13	Cam, Breaker Points	157-28	5750	1
14	Camshaft	6-12	12008	1
15	Cap & Gasket Assembly, Fuel	45-5	3059	1
16	Cap, Oil Filler	910-27	3295	1
17	Carburetor Assembly, Clinton	39-798-5		1
*17A	Clamp, Cable	81-4		1
18	Cleaner Assembly, Air	2-6-5	6215-A	1
19	Clip, Ignition Shorting	266-28	3499	1
20	Clip, Coil Holding	81-20	5734	1
*21	Clip, Fuel Line	81-169		1
22	Coil, Magneto (Without Laminations)	135-13-5	5770	1
23	Collar Assembly, Governor	109-3-5	3063-1	1
24	Condenser, Magneto	135-29-5	5589-A	1
*25	Connector, Closed Breather	69-269	91996	1
27	Core & Breaker Box Assembly	135-37-5	5732	1
29	Cover, Dust, Magneto Breaker Points	45-15	5743	1
30	Cover, Valve Chamber	45-80	7938	1
31	Cover, Element Air Cleaner	45-33	6215	1
32	Crankshaft	46-226	12119	1
33	Cup, Air Cleaner	25-5	6216	1
34	Cup, Bearing (Block)	20-61	12306	1
35	Cup, Bearing (Bearing Plate)	20-62	12301	1
36	Cup, Starting	265-10	90871	1
*	Decal Kit, Horsepower	149-549		1
39	Deflector, Air	259-35	12006	1
40	Deflector, Air	259-61	12005	1
41	Distributor, Oil	220-13	12017-1	1
42	Elbow, Breather	69-23	90610	1
43	Felt, Lubrication, Cam Follower	94-189	5742	1
44	Flywheel Assembly, With Magnets	93-13-5	5754-A	1
45	Gasket, Air Cleaner to Air Horn	94-11	10259	1
46	Gasket, Air Cleaner to Carb	94-516		1
47	Gasket, Engine Base to Block	94-118	4465-1	1
48	Gasket, Bearing Plate (Standard, .015 Thick)	94-25	3056	1
	Note: Gaskets may also be order in the following thicknesses: .005	92-25	3056	
	.101	93-25	3056	
	.020	95-25	3056	
49	Gasket, Breaker Points Cover	94-241	5744	1
50	Gasket, Cylinder Head	94-49-99	12253	1
51	Gasket, "O" Ring (Cover to Element)	94-89	6217	1
52	Gasket, Oil Filler Cap	94-81	3297	1
53	Gasket, Manifold to Carburetor	94-515		1
53A	Gasket, Asbestos (Manifold to Block)	94-31	6002	1
54	Gasket, Spark Plug	94-90	3115	1
55	Gasket, Valve Chamber Cover	94-101	3057	1
*	Gasket Kit	149-489		1

* Not Illustrated

Part Nos. listed for identification only - To obtain parts, contact your local Clinton dealer.

ENGINE PARTS LIST - Continued

30" PARKLAWN

Ref. No.	Description	IBM No.	Part No.	Qty.
56	Head, Cylinder	122-9	12011	1
57	Horn, Air	910-32	10350-C	1
58	Housing, Blower	259-615-5		1
59	Housing Assembly, Governor Shaft Bearing	20-23	12310	1
60	Key, Flywheel	148-4	10339	1
61	Lead, High Tension	307-194-99	90761	1
*61A	Lever Assembly, Speed Adj.	157-354-5		1
62	Line, Fuel, Flexible	158-23	6316	1
*62A	Line, Breather	158-67	10352	1
63	Link, Carburetor to Governor Arm	159-147		1
64	Lock, Connecting Rod Screw	148-10	12018	1
*	Magneto Assembly	268-17-5	91740	1
*64A	Manifold Assembly	169-90-5		1
65	Muffler, Tubular	170-37-5	12062-A	1
67	Nipple, Muffler to Block	69-63	12061	1
*67A	Nut, Remote Control	183-25	3253	1
68	Nut (Starter Cup)	183-68-99	5942	1
69	Nut, Square (1-Governor Adj. Arm) (2-Tank Straps)	183-53	3253	3
70	Nut, Terminal Condenser Lead	183-21	5740	1
72	Nut, Wing, Air Cleaner	183-66	7044	1
73	Nut & L'washer Assy. (1-Valve Cover Stud) (2-Carb. to Manifold) (2-Manifold to Block)	183-29-5	3255-A	5
74	Nut & L'washer Assy., Recoil Adaptor to Housing	183-25-5	4107-A	4
75	Pin, Retainer (Governor Yoke)	203-38	3656	1
76	Pin, Wrist	203-63	6024	1
*76A	Pin Pivot, Speed Control Lever	203-208		1
77	Piston Assembly, Standard	204-8-5	12376-A	1
	Note: Piston Assemblies are available in the following oversizes: .010	206-8-5	12376-A	
	.020	207-8-5	12376-A	
79	Plate, Name	58-105	6530	1
80	Plate, Bearing (Incl. Ref. No. 119)	215-70	12054	1
81	Plug, Button	216-3	12340	3
82	Plug, Camshaft Axle	216-4	3281	1
83	Plug, Oil Drain	216-19	3289	2
84	Recoil Assembly	265-28-5	13516	1
	Reducer, 6:1 Order Individual Parts Only Mounted at 3:00 O'Clock Position		3800	1
85	Retainer, Valve Spring	304-135	3028	2
*85A	Ring, Retaining	232-24		1
86	Ring, Retaining (Governor Shaft)	232-155	92189	1
89	Ring, Retainer, Wrist Pin	232-41	6034	2
90	Ring Set, Standard	149-11	12023	1
	Note: Ring Sets are also available in the following oversizes: .010	149-163	12023	
	.020	149-164	12023	
91	Rivet, Tubular, Name Plate	244-21	5460	4
93	Rod Assembly, Connecting	245-62-5	12002-A	1
	Note: Rod Assembly Incl. Ref. Nos. 64 & 97			
95	Screen, Revolving	257-31	90937	1
96	Screw, Air Cleaner to Air Horn	258-73	5636	1
97	Screw, (Connecting Rod Cap)	258-71	5635	2
99	Screw, (Governor Arm)	258-81	5644	1
*100	Screw, (Fuel Line Clip)	258-20	5415	1
101	Screw, (Governor Adjusting Arm)	258-196	3211	1
103	Screw, (Cylinder Head to Block)	258-86	5652	6
104	Screw, (Air Horn to Carburetor)	258-105	5677	2
105	Screw, (Base to Block)	258-173	3200	2
*105A	Screw, Spacer & Clamp to Block	258-171		2
106	Screw, (Condenser to Plate)	258-299	5741	1
108	Screw & L'washer Assembly, (Tank Bracket to head)	258-239-5	5412-G	1
109	Screw & L'washer Assembly (1-Tank Bracket to Block) (4-Blower Hsg. to Plate)	258-280-5	3205-G	5

* Not Illustrated

Part Nos. listed for identification only - To obtain parts, contact your local Clinton dealer.

ENGINE PARTS LIST - Continued

30" PARKLAWN

Ref. No.	Description	IBM No.	Part No.	Qty.
110	Screw & L'washer Assy., (Bearing Plate to Block)	258-274-5	5856-F	5
111	Screw & L'washer Assy., (Laminations to Bearing Plate)	258-108-5	5682-A	2
113	Screw & L'washer Assy., (Fuel Tank Straps)	258-244-5	5422-A	2
115	Screw & L'washer Assy., (Tank Bracket to Head)	258-279-5	7236-G	2
116	Screw & L'washer Assy., (Breaker Points to Breaker Box)	258-297-5	5737	1
117	Screw & L'washer Assy., (Deflector to Head)	258-81-5	5644-A	2
*118	Screw & L'washer Assy., (Tank Bracket to Blower Housing)	258-232-5	3632-G	2
118A	Screw & L'washer Assy., (Recoil to Adaptor)	258-880-5	91758-A	4
119	Seal, Oil (Bearing Plate)	94-180-99	12304	1
120	Seal, Oil (Cylinder Block)	94-163-99	3136	1
*120A	Spacer	304-559		1
121	Spark Plug & Gasket Assembly, J8	267-5-5	3568-A	1
123	Spring, Braker Box Cover	263-10	5745	1
124	Spring, Governor	263-40	4001	1
125	Spring, Valve	263-92	3068	2
126	Strap, Fuel Tank Mounting	26-162	12065	2
127	Stud, Valve Chamber Cover	24-12	5680	1
128	Stud, Carburetor to Manifold	24-11	5659	2
*128A	Stud, Manifold to Block	24-13	6155	2
129	Tank Assembly, Fuel	277-67-5	16341	1
130	Tappet, Valve	278-1	3034	2
132	Terminal, Jamtite Braker Points	307-230	5738	1
133	Valve, Exhaust	291-1-99	3031-1	1
*	Valve, Exhaust (Oversize)	292-9-99	3031-2	1
134	Valve, Intake	291-3-99	3032-1	
*	Valve, Intake (Oversize)	292-13-99	3032-2	1
135	Valve, Fuel Shut-Off	273-37	5051	1
*135A	Washer	304-28		1
*135B	Washer	304-88		1
136	Washer, "C" Valve Keeper	304-90	3291	2
137	Washer, Governor Arm Adjusting	304-125	7976	1
*137A	Washer, Spacer & Clamp to Block	304-14		1
138	Washer, Starter Pulley	304-5	5879	1
139	Washer, Lock, (Base to Block)	304-25	3275	2
140	Weight Assembly, Governor Yoke	109-15-5	3062-B	1
141	Washer, Terminal Condenser Lead	304-290	5739	1

* Not Illustrated

ENGINE AIR VANE for 25" PARKLAWN Only

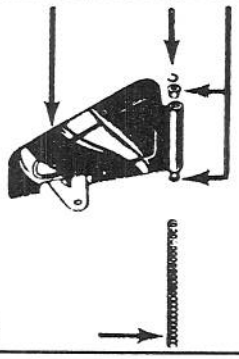

Drawing No. 8100-23

Description	IBM No.	Part No.	Qty.
Bushing, Governor Vane Pivot	28-1	7239	2
Retainer, Air Vane	232-5	4430	1
Spring Compression	263-28	10005	1
Vane, Air Governor	107-12	10393	1

Part Nos. listed for identification only. To obtain parts, contact your local Clinton dealer.

CARBURETOR

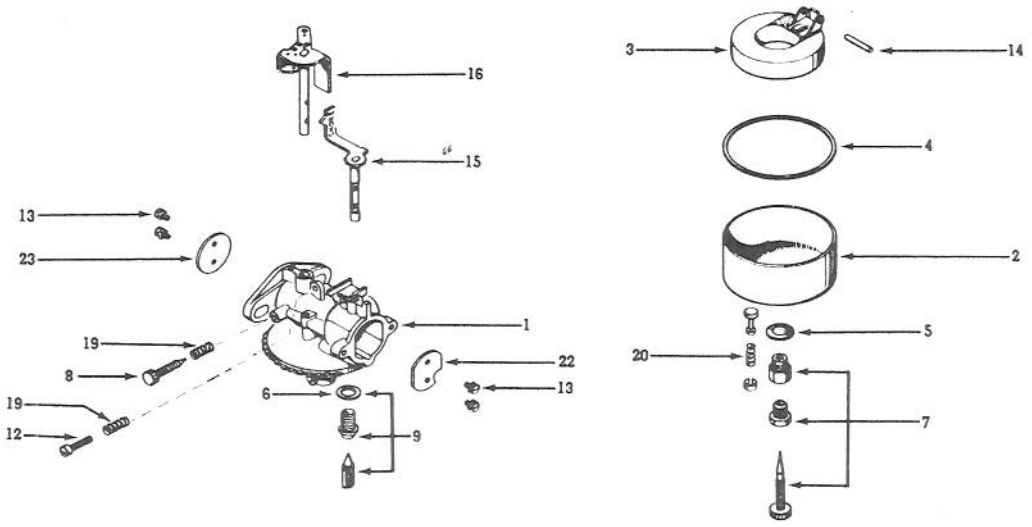

Drawing No. 8100-24

Item No.	Description	Old No.	IBM No.	Qty.
1	Body Assembly - Not Available			
2	Bowl Assembly, Inc. Item 20		25-41-5	1
3	Float & Lever Assembly		82-22-5	1
4	◂+ Gasket, Bowl		94-528	1
5	◂+ Gasket, Bowl Nut	14215	94-227	2
*5A	◂+ Gasket, Carb. Mounting		94-515	1
6	◂+ Gasket & Float Valve Seat	14208	94-229	1
7	Needle, Power Adj., Inc. Item 21	14218-A	181-5-5	1
8	◂ Needle, Idle	14228	181-2	1
9	◂ Needle & Seat Assy., Inc. Item 6	14211-R	293-76-5	1
12	Screw (Throttle Stop)	5623	258-60	1
13	Screw & L'washer, Valve Attaching		258-931-5	2
14	◂ Shaft, Float Hinge	14213	6-195	1
15	Shaft & Lever Assy., Choke		6-412-5	1
16	Shaft & Lever Assy., Throttle		6-410-5	1
19	Spring, Compression			
	(1-Throttle Stop, 1-Idle Needle)	14227	263-82	2
*19A	Spring, Power Needle		263-319	1
20	Stem Assy., Bowl Drain	403826	149-400	1
22	Valve, Choke	14382	293-15	
			293-152	1
23	Valve, Throttle		293-171	1
	Carb. Repair Kit		149-596	1
	◂ Indicate Parts in Kit			
	Gasket Kit		149-595	1
	+Indicate Parts in Kit			

* Not Illustrated

Part Nos. listed for identification only - To obtain parts, contact your local Clinton dealer.