FORM NO. 3314-127

TORO®

MODEL NO. 30502 — 00000 & UP

INSTALLATION INSTRUCTIONS

52" BLOWER KIT

GROUNDSMASTER® 200 x 52" SERIES

ONLY COPY
DO NOT REMOVE
Tech. Publications

SAFETY INSTRUCTIONS

BEFORE OPERATING

1. Read and understand the contents of this Operator's Manual before starting and operating the machine. Become familiar with all controls and how to stop quickly. A replacement manual is available by sending complete Model and Serial Number to:

   The Toro Company
   8111 Lyndale Avenue South
   Minneapolis, Minnestoa 55420

2. Never allow children or adults unfamiliar with it's operation to operate the machine, and keep everyone, especially children and pets, away from the area of operation.

3. Remove sticks, stones, wire and any other debris or objects that might be picked up and thrown by the cutter blades.

4. Keep all shields and safety devices in place. If a shield, safety device or decal is malfunctioning or damaged, repair or replace it before operation is commenced. Also, tighten any loose nuts, bolts and screws to make sure machine is in safe operating condition.

5. Do not operate machine while wearing sandals, tennis shoes, sneakers or shorts. Also, do not wear loose fitting clothing because it could get caught in moving parts. Always wear long pants and substantial shoes. Wearing safety glasses, safety shoes and a helmet is advisable and required by some local ordinances and insurance regulations.

6. Be sure interlock switches are adjusted correctly so engine cannot be started unless traction pedal is released — neutral position — and PTO switch is in DISENGAGE position.

7. Fill fuel tank with fuel before starting the engine. Avoid spilling any fuel. Since fuel is highly flammable, handle it carefully — DO NOT SMOKE.

   A. Use an approved fuel container.

   B. Do not fill tank while engine is hot or running.

   C. Do not smoke while handling fuel.

   D. Fill fuel tank outdoors and up to about one inch (25 mm) from top of the tank, not the filler neck. KEEP HOOD CLOSED when filling.

   E. Wipe up any spilled fuel. Install fuel container cap and machine fuel tank cap securely before starting the engine.

WHILE OPERATING

8. Do not run the engine in a confined area without adequate ventilation. Exhaust fumes are hazardous and could possibly be deadly.

9. Maximum seating capacity is one person. Never carry passengers.

10. Sit on the seat when starting the engine and operating the machine.

11. When starting the engine:

   A. Engage parking brake.

   B. Be sure traction pedal is in neutral and PTO is in disengage position.

   C. After engine is started, release parking brake and keep foot off traction pedal. Machine must not move. If movement is evident, the neutral return mechanism is adjusted incorrectly; therefore, shut engine off and adjust until machine does not move when traction pedal is released.

12. Using the machine demands attention, and to prevent loss of control:

   A. Mow only in daylight or when there is good artificial light.

   B. Watch for holes or other hidden hazards.

   C. Do not drive close to a sand trap, ditch, creek or other hazard.

   D. Reduce speed when making sharp turns and when turning on hillsides.

©The Toro Company — 1989

E. Avoid sudden stops and starts.

F. Before backing up, look to the rear to be sure no one is behind the machine.

G. Watch out for traffic when near or crossing roads. Always yield the right-of-way.

13. The grass deflector or complete blower assembly must always be installed on the cutting unit. If the cutting unit discharge area ever plugs, disengage PTO and shut engine off. Use a stick to remove the obstruction.

14. Never raise the cutting unit while the blades are rotating.

15. If the cutting blades strike a solid object or the machine vibrates abnormally, disengage PTO, move throttle to SLOW, set parking brake and shut engine off. Remove key from switch to prevent possibility of accidental starting. Check cutting unit and traction unit for damage and malfunctioning parts. Make all repairs before restarting the engine and operating the cutting unit. Make sure blades are in good condition and blade nuts are tight.

16. Cut grass slopes carefully. When going uphill or downhill do not start or stop suddenly.

17. Do not touch engine, muffler or its adjacent shroud while engine is running or soon after it is stopped because these areas could be hot enough to cause a burn.

18. Lower the cutting unit or other attached implement to the ground and remove key from switch whenever machine is left unattended.

19. Before getting off the seat:

A. Move traction pedal to neutral position and remove foot from pedal.

B. Disengage the PTO and set the parking brake.

C. Shut the engine off and remove key from ignition switch. Wait for all movement to stop before getting off the seat.

MAINTENANCE

20. Remove key from ignition switch to prevent accidental starting of the engine when servicing, adjusting or storing the machine.

21. Perform only those maintenance instructions described in this manual. If major repairs are ever needed or assistance is desired, contact an Authorized TORO Distributor.

22. To reduce potential fire hazard, keep the engine free of excessive grease, grass, leaves and accumulations of dirt.

23. Be sure machine is in safe operating condition by keeping nuts, bolts and screws tight. Check the blade mounting bolts frequently to be sure they are tight.

24. Make sure all hydraulic line connectors are tight, and all hydraulic hoses and lines are in good condition before applying pressure to the system.

25. Keep body and hands away from pin hole leaks or nozzles that eject hydraulic fluid under high pressure. Use paper or cardboard, not hands, to search for leaks. Hydraulic fluid escaping under pressure can have sufficient force to penetrate skin and do serious damage. If fluid is injected into the skin it must be surgically removed within a few hours by a doctor familiar with this form of injury or gangrene may result.

26. Before disconnecting or performing any work on the hydraulic system, all pressure in system must be relieved by stopping engine and lowering implement to the ground.

27. If the engine must be running to perform a maintenance adjustment, keep hands, feet, clothing and other parts of the body away from the cutting unit blades and other moving parts.

28. Do not overspeed the engine by changing governor settings. To ensure safety and accuracy, have an Authorized TORO Distributor check maximum engine speed with a tachometer.

29. Engine must be shut off before checking oil or adding oil to the crankcase.

30. At the time of manufacture, the GROUNDSMASTER grass collection system conformed to safety standards in effect for riding mowers. Therefore, to assure optimum performance and safety, always purchase genuine TORO replacement parts and accessories. Replacement parts and accessories made by other manufacturers could be dangerous. Such use could void the product warranty of The Toro Company.

SAFETY AND INSTRUCTION DECALS

The following decals are installed on the machine. If any become damaged or illegible, replace it. The decal part number is listed in your parts catalog. Replacement can be ordered from your Authorized Toro Distributor.



ON BLOWER HOUSING
(Part No. 43-8480)

⚠WARNING
DO NOT RUN BLOWER WITHOUT DISCHARGE CHUTE ATTACHED.

ON FRONT OF BLOWER HOUSING
(Part No. 43-1110)

⚠WARNING
REPLACE GRASS DEFLECTOR AFTER REMOVING BLOWER FROM DECK.

INSTALL ON CUTTING UNIT
(Part No. 43-1120)

LOOSE PARTS CHART

Description	Qty.	Use
Pulley nut Nut Cover	1 1	Install New Pulley
Capscrew — 5/16-18 x 7/8" lg. Capscrew — 5/16 x 5/8" lg. Keps Locknut — 5/16-18	1 2 3	Mount Front Baffle
Carriage Bolt — 5/16-18 Capscrew — 5/16-18 x 7/8" lg. Keps Locknut — 5/16-18	2 1 3	Mount Rear Baffle
Capscrew — 3/8-16 x 1" lg. Lockwasher Capscrew — 1/4-20 x 3/4" lg. Locknut — 1/4-20	4 4 2 2	Mount Center Ring Baffle
Capscrew — 1/4-20 x 3/4" lg. Locknut — 1/4-20	3 3	Mount Right Ring Baffle
Bracket Plate Carriage Bolt — 5/16-18 x 5/8" lg. Keps Locknut — 5/16-18 Capscrew — 5/16-18 x 3/4" lg.	2 4 6 2	Mount Blower Assembly
Capscrew — 5/16-18 x 3/4" lg. Washer — 5/16 Keps Locknut — 5/16-18	3 3 3	Install Idler Assembly
Capscrew — 1/4-20 x 3/4"	2	Install Spring Bracket
Capscrew — 3/8-16 x 1" lg. Flange Locknut — 3/8-16 Capscrew — 1/2-13 x 1-1/2" lg. Locknut — 1/2-13	2 2 2 2	Install Bumper
Warning Decal	1	Apply to Deck

INSTALL NEW SPINDLE PULLEY

1. Remove cutting unit from traction unit. Refer to Cutting Unit Operator's Manual.

2. Remove capscrews and lockwashers securing right cover to top of cutting unit. Remove cover from cutting unit.

3. Loosen two nuts securing idler plate so tension of the idler pulley against the belt is released (Fig. 1).

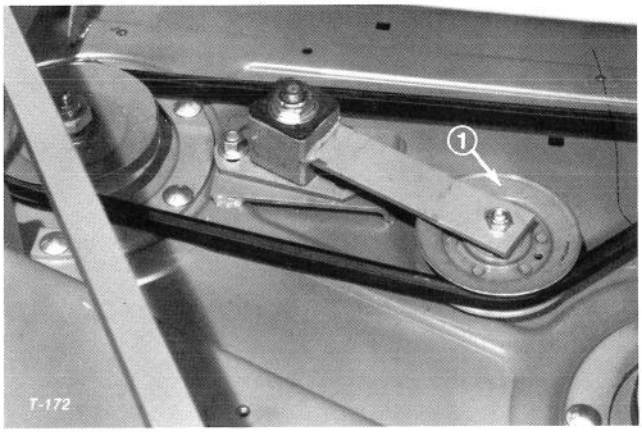

Figure 1

1. Idler pulley

4. Remove belt from right spindle pulley (Fig. 1).

5. Remove six flange bolts and nuts holding spindle housing assembly and support ring against cutting unit (Fig. 2). Slide spindle housing assembly out bottom of cutting unit.

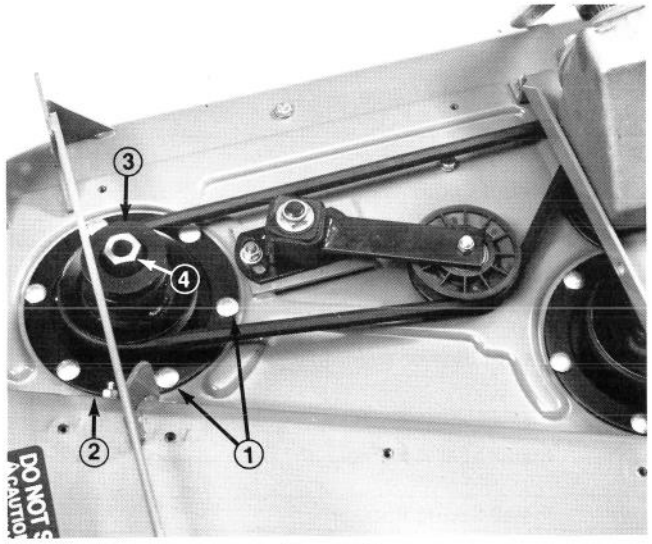

Figure 2

1. Flange bolts
2. Support ring
3. Double spindle pulley
4. Pulley nut

6. Remove nut retaining pulley on spindle shaft. Pull pulley off shaft.

7. Slide new double spindle pulley onto spindle shaft. Do not install pulley nut at this time.

8. Slide pulley end of spindle housing assembly through hole in cutting unit, and loop belt around pulley and idler. Mount spindle assembly in place with support ring and six carriage bolts and flange nuts.

9. Install new pulley nut onto spindle shaft and tighten to 100 ft-lb. Install nut cover.

10. Readjust idler adjusting nut until proper belt tension is achieved, then tighten idler plate nuts.

REMOVE GRASS DEFLECTOR

1. Remove capscrews, locknuts, and springs securing deflector mounts to pivot brackets. Remove deflector (Fig. 3).

2. Remove carriage bolts, lockwashers, and nuts securing pivot brackets to housing (Fig. 3).

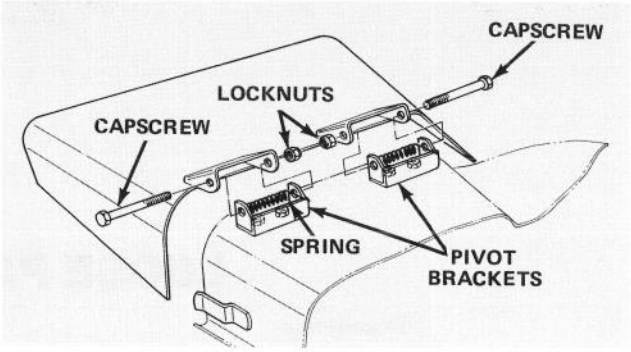

Figure 3

3. Retain grass deflector and mounting parts for later installation.

MOUNT DECK BAFFLES

1. Mark and drill a 3/8" dia. hole through the center of the deflector stop (Fig. 4).

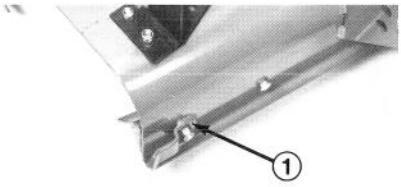

2. Mount end of front baffle to deck with a 5/16-18 x 7/8" lg. capscrew and locknut (Fig. 5).

3. Align baffle with edge of deck and use baffle as a template to mark and drill (2) remaining 3/8" dia. holes in deck (Fig. 5).

4. Secure baffle to deck with (2) 5/16-18 x 5/8" lg. capscrews and locknuts (Fig. 5).

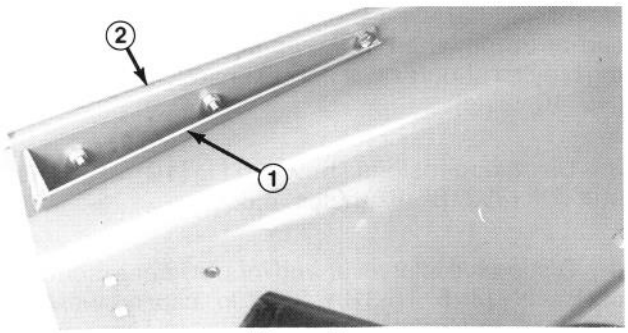

Figure 5

1. Front baffle 2. Edge of deck

5. Align rear baffle with corner of discharge opening (Fig. 6).

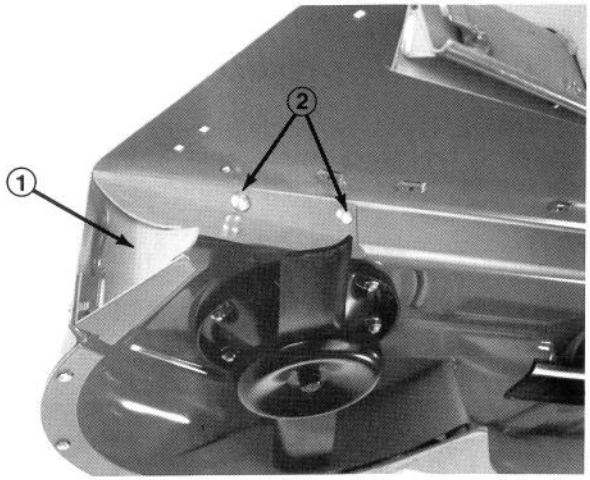

Figure 6

1. Rear baffle
2. Carriage bolts

6. Using baffle as a template, mark and drill (3) 3/8" dia. holes thru deck.

7. Secure baffle to deck with (2) 5/16x3/4" carriage bolts, (1) 5/16-18 x 7/8" lg. capscrew and (3) locknuts.

8. Position center ring baffle on deck (Fig. 7). Using a long thin pencil or punch, mark (4) mounting holes in deck. Holes may already be in deck.

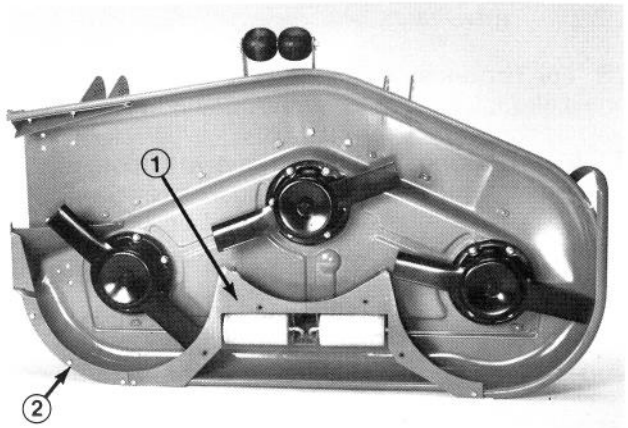

Figure 7

1. Center ring baffle 2. Right ring baffle

9. Drill (4) 13/32" holes in deck, if required.

10. Mount center baffle to deck with (4) 3/8-16 x 1" lg. capscrews and lock washers (Fig. 7).

11. Using center baffle as a template, mark and drill (2) 9/32" dia. holes through center of curved edge of deck (Fig. 7).

12. Secure baffle to edge of deck with (2) 1/4-20 x 3/4" lg. capscrews and locknuts (Fig. 7).

13. Align right ring baffle with end of center baffle and edge of deck (Fig. 7). Mark and drill (3) 9/32" dia. holes in center of curved edge of deck.

14. Secure right baffle to deck with (2) 1/4-20 x 3/4" lg. capscrews and locknuts.

15. Make sure all fasteners are tight. Carefully rotate blades by hand to make sure they clear baffles.

MOUNT BLOWER

1. Position blower and mounting brackets on deck, aligning mounting holes with holes previously used for mounting grass deflector (Fig. 8). Figure shown with blower removed.

Note: If cutting unit was previously equipped with a bagger which required a large hole in discharge area of deck, mount cover plate (order Part No. 44-5750 from an Authorized TORO Distributor) between bolt head and bottom side of deck instead of bracket plates.

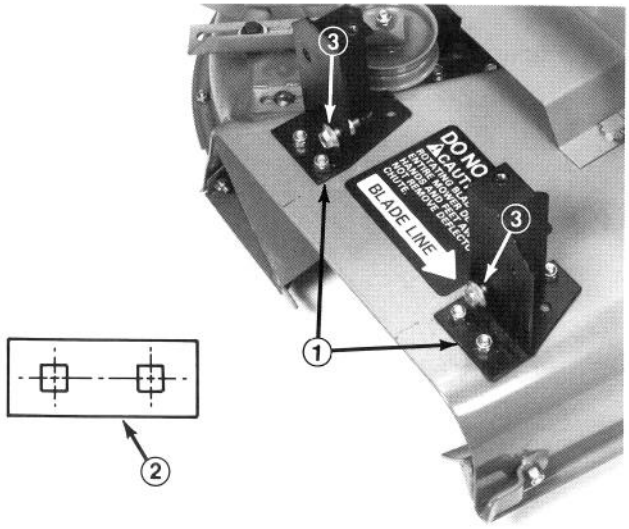

Figure 8

1. Blower mounting brackets
2. Bracket plate
3. Alignment studs

2. Making sure no air gap exists between blower and cutting deck. Secure each bracket to deck with a bracket plate (Fig. 8, Inset), (2) 5/16-18 x 5/8" lg. carriage bolts and locknuts. Position bracket plates between bolt head and bottom side of deck.

3. Using each bracket as a template, mark location of third mounting hole (left rear position); see Fig. 9.

4. Remove (2) knobs and washers securing blower to mounting brackets. Remove blower.

5. Drill a 3/8" dia. hole for each bracket and secure with a 5/16-18 x 3/4" lg. capscrew and locknut.

6. Route belt around small spindle pulley.

7. Slide blower onto mounting bracket alignment studs (Fig. 9) while routing belt around blower pulley.



Figure 9

1. Left rear mounting hole

Note: If blower assembly does not easily slide onto mounting brackets, loosen alignment bolts slightly.

8. Secure blower to brackets with (2) knobs and washers.

INSTALL IDLER ASSEMBLY

1. Position idler assembly on deck; see Fig. 10.

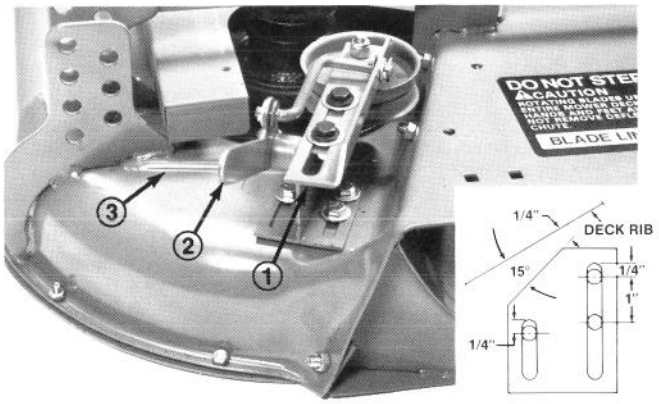

Figure 10

1. Idler assembly
2. Idler lever
3. Raised rib in deck

2. Engage idler lever (toward belt) and slide idler pulley firmly into blower belt. To provide for future adjustment, there should be at least 1/4" clearance between front of idler mounting bracket and raised rib in deck (Fig. 10, Inset). Mounting bracket should be positioned on flat part of deck. Make sure idler pulley clears spindle pulley and blower and idler lever clears carrier frame when in the engaged position. Mounting bracket should be at approximately 15° to deck rib (Fig. 10, Inset).

3. Using dimensions shown in Fig. 10, Inset, locate and drill (3) 3/8" dia. holes in deck.

4. Disengage idler lever and mount idler assembly to deck with (3) 5/16-18 x 3/4" lg. capscrews, 5/16 washers, and locknuts. Position washer between nut and idler assembly.

5. Engage idler lever and check belt tension. Adjust if necessary.

REPOSITION COUNTERBALANCE SPRING

1. Remove capscrews, lockwashers, and nuts securing spring bracket to front frame. Remove shoulder bolt and flangenut securing spring end to cutting unit.

2A. For Groundsmaster 52, 217D & 220 — On most traction unit frames, mounting holes already exist at locations shown in Fig. 11. If not, using dimensions shown in Fig. 11, locate and drill (2) 13/32" dia. holes thru both walls of front frame tube.

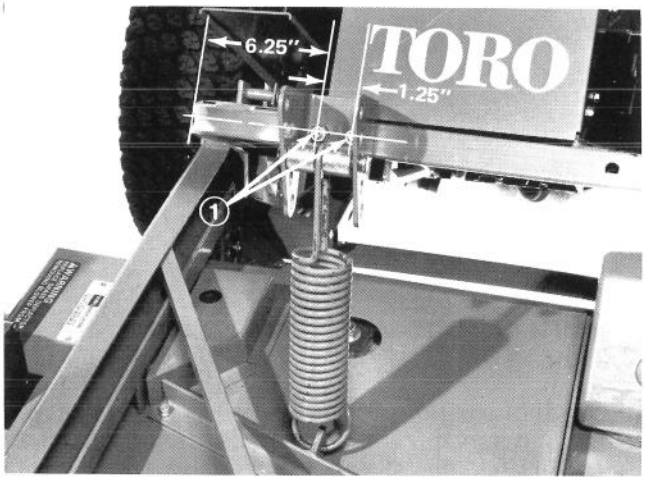

Figure 11

1. Drill 13/32" (.406") hole (2) if necessary

2B. For Groundsmaster 220D & 224 — Mounting holes already exist at locations shown in Fig. 12.

3. Mount spring bracket to frame with fasteners — previously removed. For Groundsmaster 52, 217D, and 220, nuts must be positioned on bracket side when installing (Fig. 12).

4. Steering must be readjusted to maintain correct turning radius. Turn steering wheel fully toward left. (Not required on Groundsmaster 220D or 224).

Loosen jam nuts (both ends) and lengthen steering tube until right handle spindle contacts axle stop. Tighten jamnuts (both ends) on steering tube (Fig. 13).

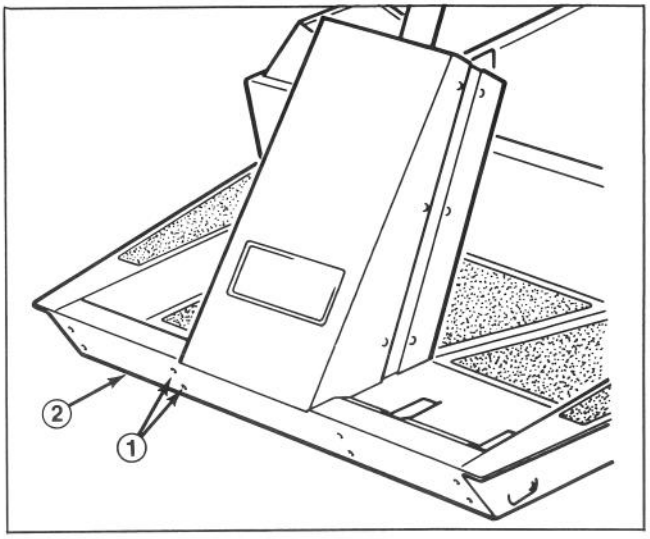

Figure 12

1. Counterbalance spring bracket mounting holes
2. Groundsmaster 220D frame

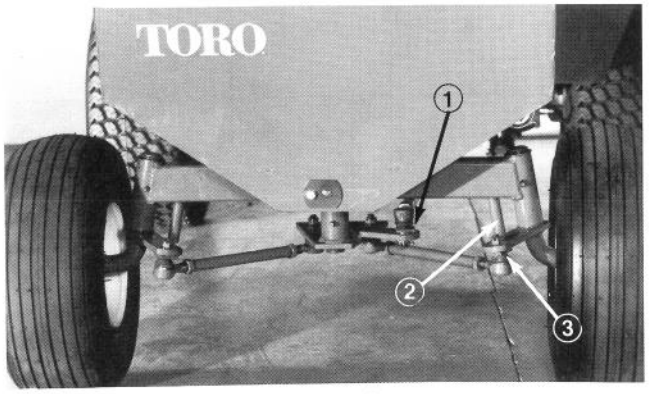

Figure 13

1. Steering tube
2. Axle stop
3. Right hand spindle

5. Install new belt cover and spring bracket to cutting unit (Fig. 14). Secure bracket to deck with (2) 1/4-20 x 3/4" lg. capscrews. Latch cover.

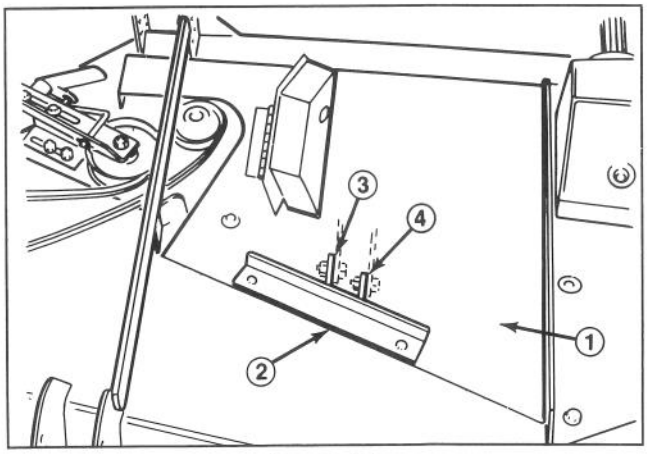

Figure 14

1. New belt cover
2. Spring bracket
3. Tab for Groundsmaster 52, 217D & 220
4. Tab for Groundsmaster 220D & 224

6. Mount spring end to spring bracket with shoulder bolt and flangenut previously removed. On units with counterbalance kit with folding knee link, the knee link bracket must be removed and reinstalled with the top hole of the knee link bracket towards the front of the cutting unit (Fig. 15). Be sure to mount counterbalance spring to connect tab on cutting unit spring bracket (Fig. 14).

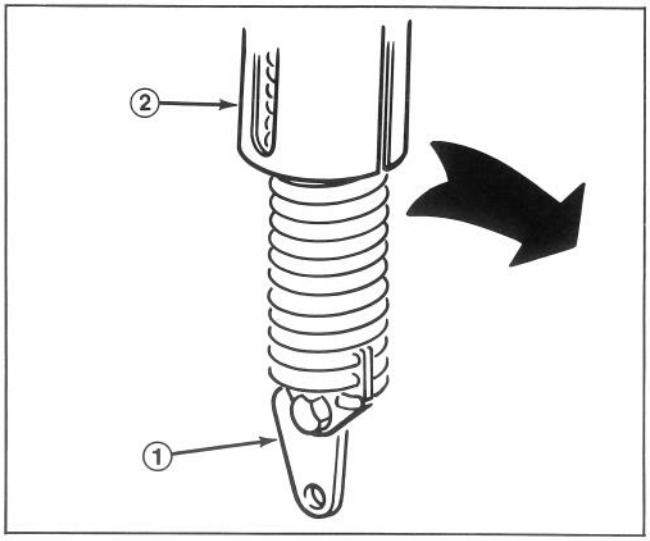

Figure 15

1. Reinstalled knee link bracket
2. Knob adjust counterbalance spring

7. Install cutting unit and adjust counterbalance spring as instructed in operator's manual.

INSTALL BUMPER

(Cutting units w/serial numbers 90001 & up)

1. Place cutting unit in highest height-of-cut position; refer to cutting unit Operator's Manual.

2. Remove two forward 1/2-13 x 1½" capscrews at the lift arm/carrier frame connection (Fig. 16). Align the bumper with the two holes, center punch and

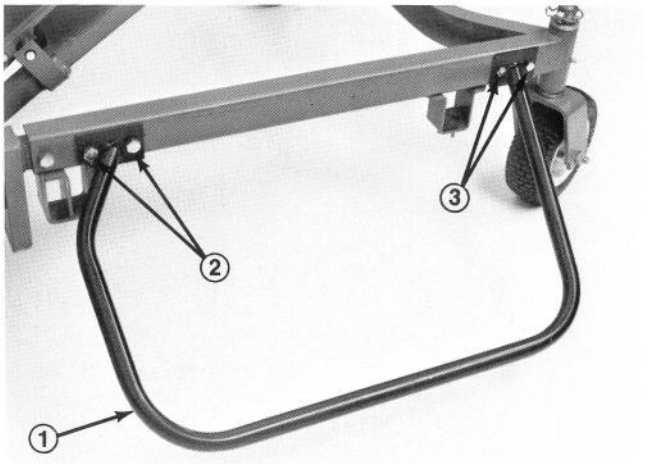

Figure 16

1. Bumper
2. 1/2-13 x 1-1/2" capscrews
3. 3/8-16 x 1" capscrews & 3/8-16 flange locknuts

drill two 13/32" diameter holes for the front bumper bracket in the carrier frame channel.

3. Mount bumper and secure with (2) 1/2-13 x 1-1/2" capscrews at lift arm/carrier frame connection and (2) 3/8-16 x 1" capscrews and 3/8-16 flange locknuts at the front bracket location. Torque the 1/2-13 x 1-1/2" capscrews to 70-80 ft-lb (Fig. 16).

(Cutting units w/serial numbers through 80999)

1. Place cutting unit in highest height-of-cut position; refer to cutting unit Operator's Manual.

2. From the lift arm elbow plate on the carrier frame, measure 4" and 6 1/4" forward on the frame, center punch and drill two 17/32' holes (Fig. 17).

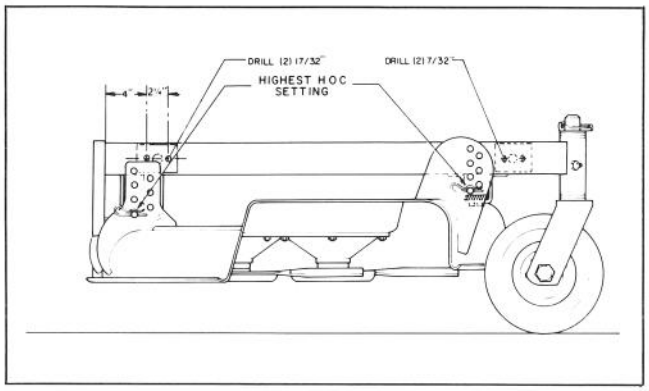

Figure 17

3. Mount bumper to the two holes and secure with (2) 1/2-13 x 1-1/2" capscrews and 1/2-13 locknuts.

4. At the opposite end of the bumper, center punch through the mount holes and drill two 7/32" holes.

Install and tighten (2) 3/8-16 x 1" capscrews and 3/8-16 flange locknuts to complete securing the bumper to the frame (Fig. 17). Torque the two 1/2-13 x 1-1/2" capscrews to 70-80 ft-lb.

INSTALL DECAL

Install WARNING decal to cutter deck either just under the right hand carrier frame member or just inside of it.

MOUNT BLOWER HOUSING CHUTE

1. Set deck into desired height-of-cut setting.

2. Slide chute over blower opening and onto mounting studs (Fig. 18).

3. Lower hopper hood and align chute with hood snout. Secure chute in position with locknuts and brackets. Wide end of brackets to be positioned toward rear (Fig. 18).

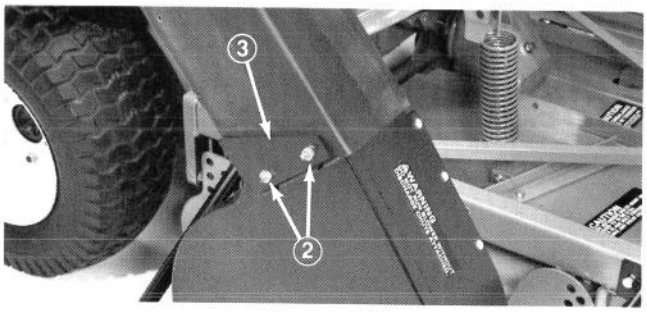

Figure 18

1. *Chute*
2. *Mounting studs*
3. *Mounting bracket*

OPERATING INSTRUCTIONS

OPERATING CHARACTERISTICS
(When used with a 9 cubic foot hopper kit)

CAUTION

When grass collector is removed, NEVER operate without deflector in place.

For best performance, regulate traction pedal to keep engine rpm high and somewhat constant. A good rule to follow is: decrease ground speed as the load on the cutting blade increases; and increase ground speed as load on the blades decreases. This allows the engine, working with the transmission, to sense the proper ground speed while maintaining high blade tip speed necessary for good quality-of-cut, vacuuming action, and to throw grass into hopper. If blower speed drops too low plugging may result. Refer to Cutting Unit and Traction Unit Operator's Manual for operation of each.

CAUTION

Use care to avoid collision between grass bag and any stationary objects. Always trim with left side of cutting unit.

1. This grass collector is designed for use in wet or dry conditions. Do not collect extremely long grass as the bag will fill too quickly.

2. When bagging wet, heavy grass, some clippings may not be thrown completely through the chute. The hole in the bottom of the chute allows these clippings to drop out without plugging the chute. When this happens, reduce ground speed.

3. The bumper which protects the blower housing doesn't extend far enough to eliminate chance of lower tray or hood striking a stationary object. Stay far enough away from obstructions to avoid collision. Trim with left hand side of cutting unit only.

4. To improve productivity, Toro recommends purchasing an additional seven or ten bushel grass bags from your local Toro dealer. Store empty bags in tray of lower support tube assembly and drop off filled and sealed bags to be collected later.

5. The optional ten bushel grass bags should not be used under extremely wet grass conditions as they may be too heavy to remove easily.

6. Heavy duty lawn trash bags may be used with an optional retainer cord (Toro part no. 36-7770). High winds may cause bottom of empty bags to shift off lower tray. If this happens, mow until bag is slightly filled and recenter on tray.

7. The grass collector hood is designed to exhaust air beside the grass bag rather than through it. This allows the grass bag to fill completely without decreasing performance. Grass will fall through the opening in the front of the hood when the grass bag is full. Immediately disengage the power take off, set brake, and shut off ignition. Change or empty grass bag. Failure to empty or change bag will plug the chute. After changing bag check that grass clippings have not fallen into chute.

8. Optional Hi-sail blades (Toro part no. 44-5480) will give improved performance in wet cutting conditions.

9. While operating, check frequently for excessive clippings left on turf or uncut grass. If those conditions occur, the blower or cutting unit may be plugged. Stop unit, disengage PTO, set brake, and shut off ignition. Check for obstructions in the chute, blower or cutting unit. Clear any obstructions using a stick or similar tool. Check that screen in hood is clear of obstructions. Check blower belt tension. If slipping, readjust.

DANGER

Never place hands or feet in chute, blower, or cutting unit.

10. Cut grass often, especially when turf growth is rapid. If shorter turf is desired, cut the grass again. Overlap swaths to produce an even cutting pattern.

IMPORTANT: When transporting unit, tie down grass collector hood or back unit onto truck or trailer to avoid wind throwing hood open and damaging it.

11. To remove blower assembly, shut off engine, disengage idler assembly, unlatch and open belt cover and lift belt off spindle pulley. Close cover. Remove (2) knobs and washers securing blower to mounting brackets and remove blower, belt, and chute.

12. Reverse procedure to reinstall blower assembly.

MOUNT GRASS DEFLECTOR

1. Remove bumper from carrier frame. Reinstall two lift arm/carrier frame connection capscrews. Torque to 70-80 ft-lb.

2. Position grass deflector mounts on outside of pivot brackets (included in kit) and secure parts together with capscrews, locknuts, and washers previously removed (Fig. 19). Both locknuts must face each other. Tighten locknuts until they are flush against deflector pivots.

3. Slide grass deflector and pivot brackets onto alignment bolts and secure to mounting brackets with knobs and washers. Lift deflector and allow it to drop to check spring tension.

Note: If blower assembly or grass deflector do not easily slide on or off mounting brackets, loosen alignment bolts slightly.

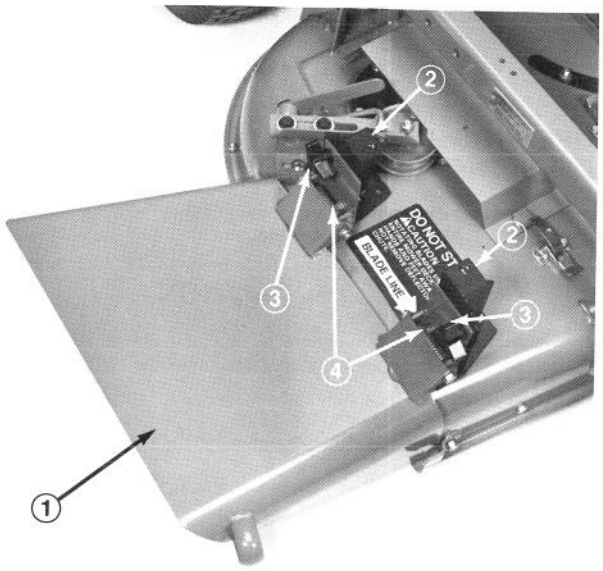

Figure 19

1. *Grass deflector*
2. *Mounting brackets*
3. *Knob and washer*
4. *Alignment bolts*

MAINTENANCE

1. Keep unit clean, checking that engine is free of dirt and chaff. Make sure all fasteners are tight. Check baffles and shields for wear and replace as needed.

2. Check gearbox impeller for tightness every 50 hours. Torque impeller shaft bolt to 220-230 in.-lbs.

3. Clean grass clippings from hood, chute, blower, and cutting unit after each use. Wash underside of cutting unit daily with hose. An excessive buildup of clippings will impair bagging performance.

4. Check belt tension and wear every 50 hours. To adjust belt tension, loosen idler mounting screws, engage idler lever and push idler pulley firmly into blower belt. Tighten mounting screws.

5. The blower gear box should need little maintenance. Check for leakage every 50 hours. If leakage should occur, replace seals and refill with two oz. of high quality moly di-sulfide grease. Repack bearings with same before assembling.

6. Refer to Cutting Unit and Traction Unit Operator's Manuals for service requirements of each.

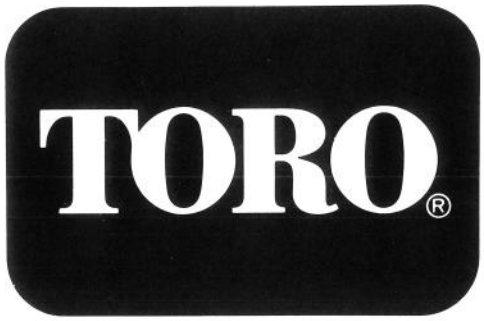
TORO®

The Toro Promise

A ONE YEAR LIMITED WARRANTY ON COMMERCIAL PRODUCTS OTHER THAN TRIMMERS AND BLOWERS.

The Toro Company promises to repair your TORO Product if defective in materials or workmanship. The following time periods from the date of purchase apply:

Commercial Products . . . . . 1 Year

The costs of parts and labor are included, but the customer pays the transportation costs on walk rotary mowers, trimmers and blowers.

If you feel your TORO product is defective and wish to rely on The Toro Promise, the following procedure is recommended:

1. Contact your Authorized TORO Distributor or Commercial Dealer (the Yellow Pages of your telephone directory is a good reference source).
2. The TORO Distributor or Commercial Dealer will advise you on the arrangements that can be made to inspect and repair your product.
3. The TORO Distributor or Commercial Dealer will inspect the product and advise you whether the product is defective and, if so, make all repairs necessary to correct the defect without an extra charge to you.

If for any reason you are dissatisfied with the distributor's analysis of the defect or the service performed, you may contact us.

Write:

TORO Commercial Products Service Department
8111 Lyndale Avenue South
Minneapolis, Minnesota 55420

The above remedy of product defects through repair by an Authorized TORO Distributor or Commercial Dealer is the purchaser's sole remedy for any defect.

THERE IS NO OTHER EXPRESS WARRANTY. ALL IMPLIED WARRANTIES OF MERCHANTABILITY AND FITNESS FOR USE ARE LIMITED TO THE DURATION OF THE EXPRESS WARRANTY.

Some states do not allow limitations on how long an implied warranty lasts, so the above limitation may not apply to you.

This Warranty applies only to parts or components which are defective and does not cover repairs necessary due to normal wear, misuse, accidents, or lack of proper maintenance. Regular, routine maintenance of the unit to keep it in proper condition is the responsibility of the owner.

All warranty repairs reimbursable under the Toro Promise must be performed by an Authorized TORO Commercial Dealer or Distributor using Toro approved replacement parts.

Repairs or attempted repairs by anyone other than an Authorized TORO Distributor or Commercial Dealer are not reimbursable under the Toro Promise. In addition, these unauthorized repair attempts may result in additional malfunctions, the correction of which is not covered by warranty.

THE TORO COMPANY IS NOT LIABLE FOR INDIRECT, INCIDENTAL OR CONSEQUENTIAL DAMAGES IN CONNECTION WITH THE USE OF THE PRODUCT INCLUDING ANY COST OR EXPENSE OF PROVIDING SUBSTITUTE EQUIPMENT OR SERVICE DURING PERIODS OF MALFUNCTION OR NON-USE.

Some states do not allow the exclusion or limitation of incidental or consequential damages, so the above limitation or exclusion may not apply to you.

This warranty gives you specific legal rights, and you may also have other rights which vary from state to state.

COUNTRIES OTHER THAN THE UNITED STATES OR CANADA

Customers who have purchased TORO products exported from the United States or Canada should contact their TORO Distributor (Dealer) to obtain guarantee policies for your country, province or state. If for any reason you are dissatisfied with your Distributor's service or have difficulty obtaining guarantee information, contact the TORO importer. If all other remedies fail, you may contact us at The Toro Company.

Compliance with Radio Interference Regulations Certified.
Certifie Conforme au Reglement sur le Brouillage Radioelectrique.

Litho in U.S.A.