FORM NO. 3313-933

TORO®

MODEL NO. 30585

INSTALLATION INSTRUCTIONS

GROUNDSMASTER 580-D ROAD KIT

ONLY COPY
DO NOT REMOVE
Tech. Publications

INITIAL PREPARATION

1. Unlatch, raise and secure hood with hood prop. Unlatch and remove the left side panel.

2. Remove capscrews securing the battery tray and slide the tray out.

3. Remove the negative (–) battery cable connectors from both batteries.

WARNING

Wear safety goggles and rubber gloves when working with batteries. Since the gasses are explosive, keep electrical spark and open flame away from batteries. Do not smoke.

DRILL FRONT SHROUD MOUNTING HOLES

1. On the main frame forward of the steering column tower, measure and mark 5/8 in. down from the top edge (Fig. 1).

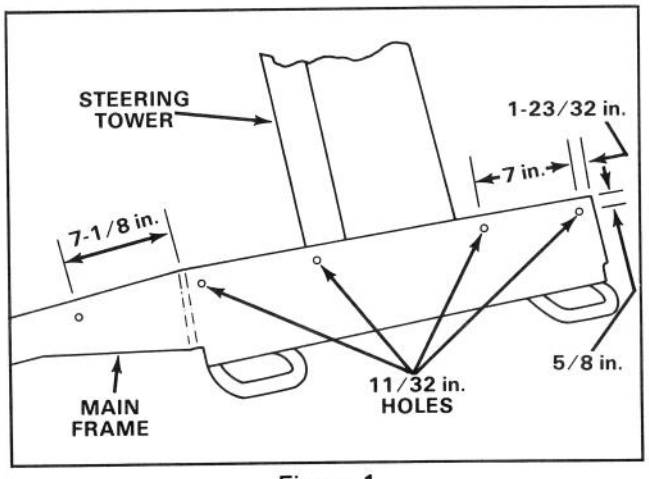

Figure 1

2. From the outer edge of the frame on each side, measure 1-23/32 in. inward and center punch where they intersect the 5/8 in. mark (Fig. 1).

3. Measure 7 in. toward the center from each center punch mark and center punch again at the intersection of the 5/8 in. mark (Fig. 1).

4. From the front face of the frame, measure 7-1/8 in. rearward along each side and center punch where it intersects the 5/8 in. mark (Fig. 1).

5. Drill an 11/32 in. hole at each center punch location.

DRILL HORN MOUNTING HOLES AND INSTALL HORN ASSEMBLY

1. Measure 7-3/4 in. away from the floor plate edge adjoining the right side of the steering tower and scribe a line parallel to the side of the steering cover (Fig. 2).

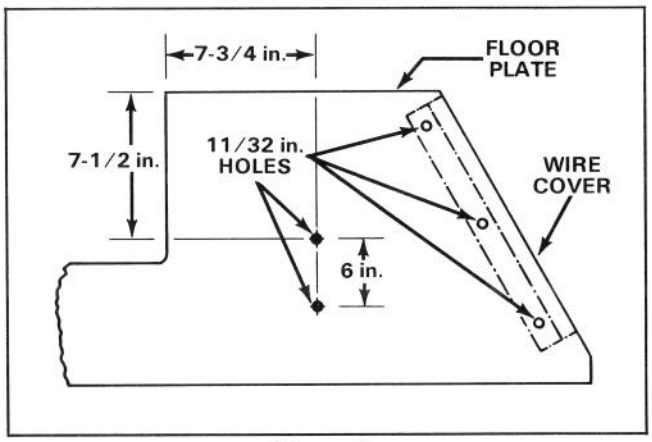

Figure 2

2. From the front edge of the floor plate, measure 7-1/2 in. rearward on the 7-3/4 in. mark and center punch the location (Fig. 2).

3. Measure 6 in. further rearward from the original punch mark and center punch again (Fig. 2).

4. Drill an 11/32 in. hole at each location.

5. Mount horn to horn bracket and secure with a flange locknut.

6. Insert 5/16 x 5/8 in. flange head screws (2) into horn mounting holes in floorboard, mount horn bracket onto screws and secure to bottom of the floorboard with flange locknuts.

DRILL WIRE COVER MOUNTING HOLES

1. Lay the wire cover on the floor plate and butt it against the right side of the main frame (Fig. 2).

2. Center punch each mounting hole and drill an 11/32 in. hole at each location (Fig. 2).

DRILL HOLE IN DIAGNOSTIC PANEL

1. From the front lower edge of the panel, measure and mark 3-1/2 in. up the cover (Fig. 3).

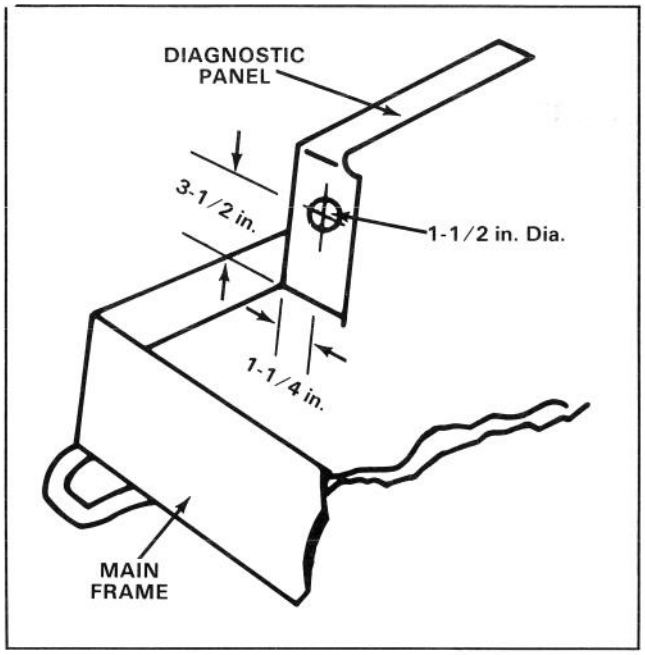

Figure 3

2. From the outer edge, measure 1-1/4 in. and center punch where it intersects the 3-1/2 in. mark (Fig. 3).

3. Drill a 1-1/2 in. diameter hole in the cover (Fig. 3).

Note: Be careful not to damage hydraulic hose and fittings.

4. Install a P/N 240-3 grommet in the hole (Fig. 3).

Note: It may be necessary to make the hole slightly larger to accommodate the wire harness connector.

INSTALL LIGHT SWITCH

1. Locate light switch mounting location on the control panel (Fig. 4).

2. Open the control panel cover. Use a punch and hammer to knock the plug out at the mounting location (Fig. 4).

3. Discard the plug and install the switch.

PREPARATION FOR MOUNTING CONTROL BOX COMPONENTS

1. Remove the cup holder assembly at the rear of the control box assembly (Fig. 5).

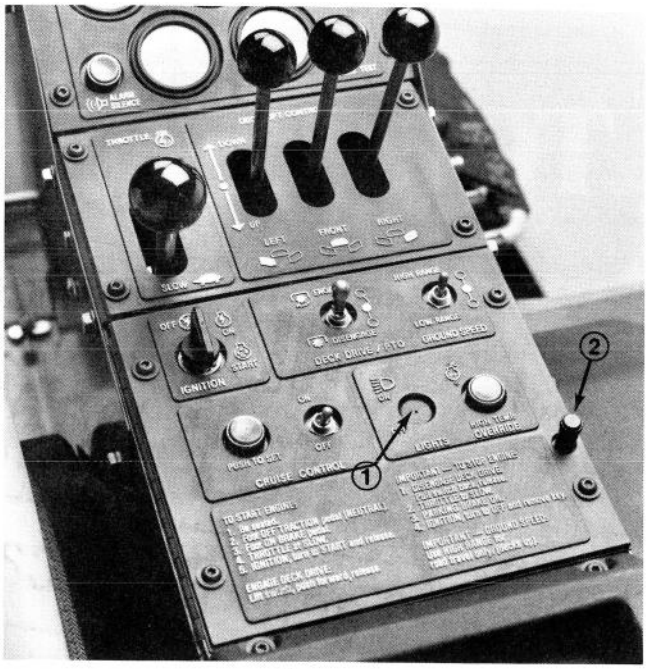

Figure 4

1. Light switch mount hole
2. Control panel lift knob

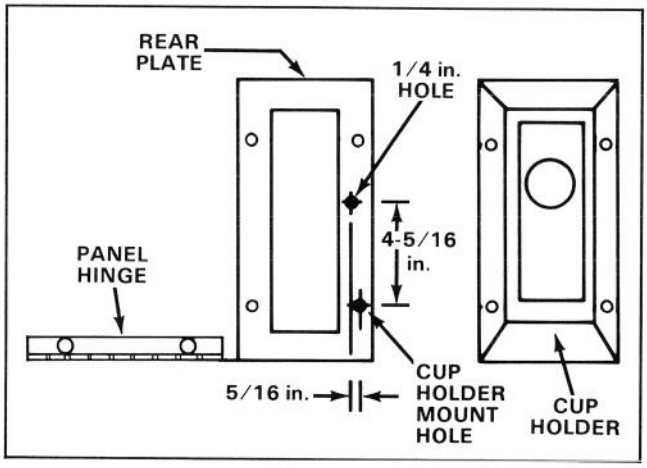

Figure 5

2. Locate the cup holder mount hole rearward of the control panel hinge (Fig. 5). Measure 5/16 in. forward from the hole center and scribe a line fully across the plate (Fig. 5).

3. From the center of the cup holder mount hole, measure 4-5/16 in. on the scribed line. Center punch and drill a 1/4 in. hole (Fig. 5).

4. Close the control box cover. From the mounting edge for the control box cover hinge, scribe a line parallel to the top edge 1-5/8 in. down on the outside of the control support (Fig. 6).

5. Measure 7-1/4 in. on the 1-5/8 in. line from the rear of the control support and center punch the location (Fig. 6). Then, measure an additional 3-1/16 in. from the center punch mark and center punch again (Fig. 6). Drill a 13/64 in. hole at each center punch location (Fig. 6).

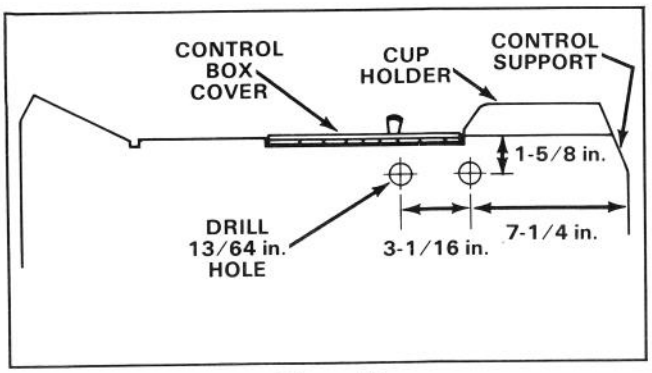

Figure 6

PREPARE RADIATOR COWL FOR AMBER LIGHT ASSEMBLIES

Note: For machines without the Roll-Over Protection (ROPS) option.

1. Remove the upper grille from the cowl.

2. From the outer edge of the cowl, scribe a line 3-3/4 in. in on top of the cowl (Fig. 7).

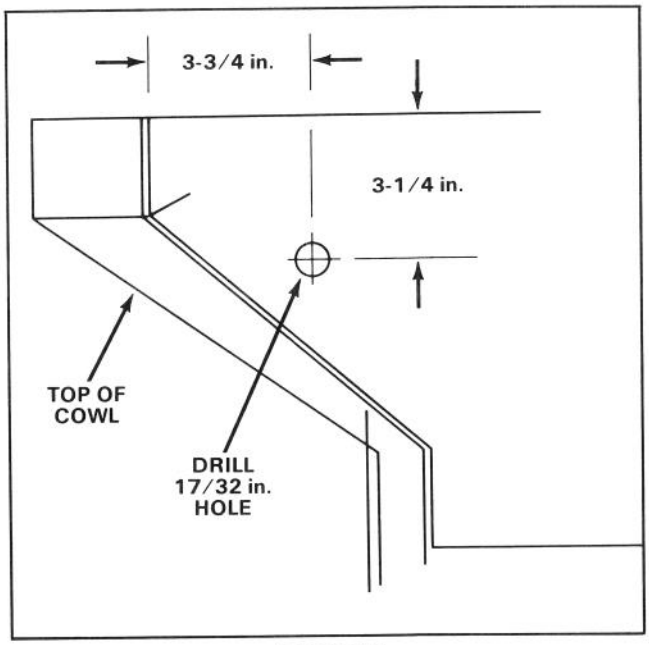

Figure 7

3. From the top front edge of the cowl, center punch 3-1/4 in. back on the 3-3/4 in. line and drill a 17/32 in. hole (Fig. 7).

4. Repeat steps 2-3 on the opposite side of the cowl (Fig. 7).

DRILL HARNESS HOLE IN RADIATOR SUPPORT

Note: For machines without the Roll-Over Protection (ROPS) option.

1. Remove the cowl from the machine.

2. On the right hand side of the radiator support, measure and center punch 5-3/4 in. up from the center of the top right hand radiator mounting hole (Fig. 8).

3. Drill a 1 in. hole in the support (Fig. 8).

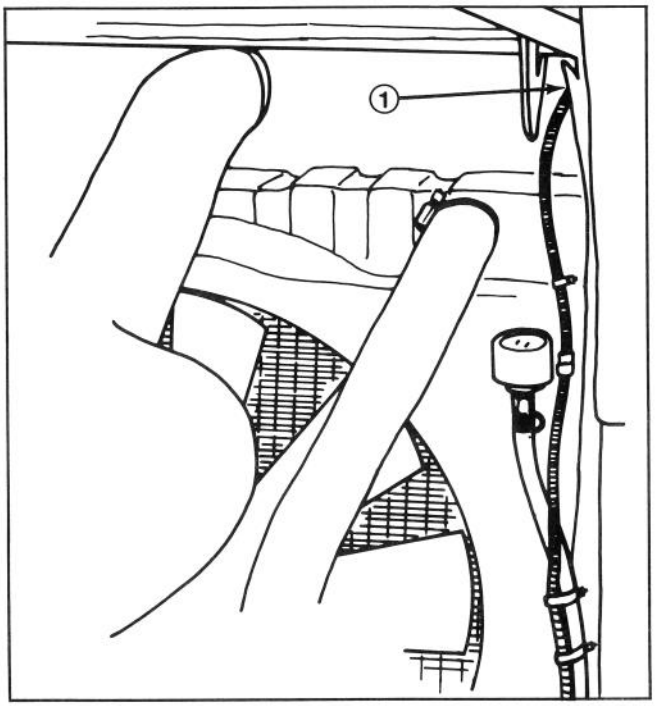

Figure 8

1. 5-3/4 in. up from top R.H. radiator mount hole. Drill 1 in. hole

PREPARE ROPS W/CANOPY FOR AMBER LIGHT ASSEMBLIES

1. Measure and mark 3 in. down from the top of the ROPS canopy (Fig. 9).

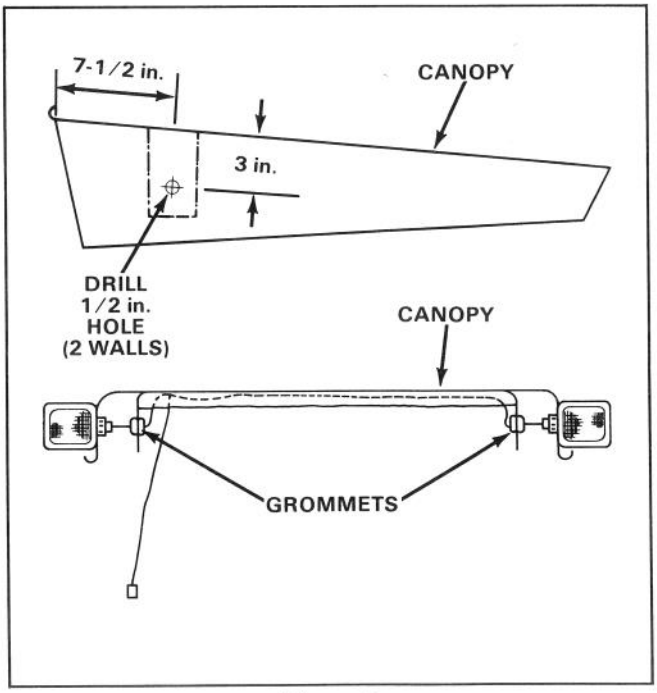

Figure 9

2. Measure 7-1/2 in. from the top rear of the canopy and center punch at the intersection with the 3 in. mark (Fig. 9).

3. Drill 1/2 in. holes through the outside of the canopy and the inside wall in line with the outside hole (Fig. 9).

4. Repeat steps 1-3 on the opposite side of the canopy.

5. Install a P/N 237-88 Grommet into the inner wall holes on each side (Fig. 9).

DRILL BUMPER FOR WIRE HARNESS TIES

1. On the lower flange of the rear bumper, measure approximately 1 in. away from the side frame and 3/4 in rearward on the bumper flange on each side and center punch each location (Fig. 10).

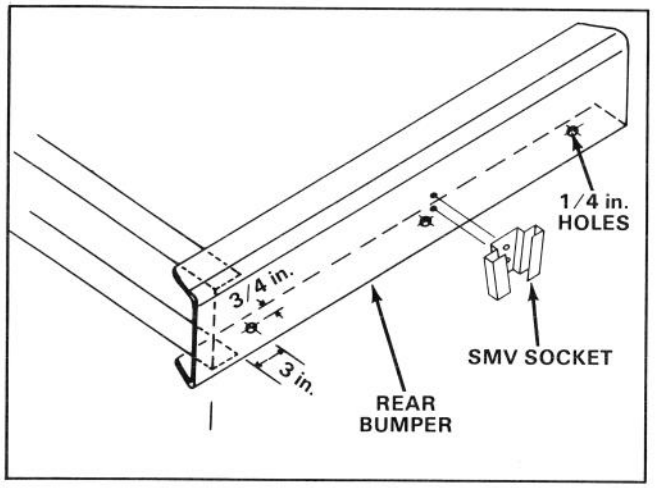

Figure 10

2. Measure 3/4 in. inward on the bumper flange in approximate center of the bumper and center punch the location (Fig. 10).

3. Drill 1/4 in. holes in all three locations (Fig. 10).

DRILL HOLES AND MOUNT SMV SOCKET

1. Locate the center of the back of the rear bumper. Place the SMV socket over the location and center punch and drill the two SMV mounting holes with a 5/16 in. drill (Fig. 10).

2. Secure SMV socket to the bumper with two (2) 5/16 x 1 in. carriage bolts and 5/16 flange lock nuts (Fig. 10).

DRILL HOLES FOR RIGHT AND LEFT LIGHT ARMS

1. On right or left side of the machine frame, measure 4-1/4 in. forward from end of channel and scribe a line down the frame (Fig. 11).

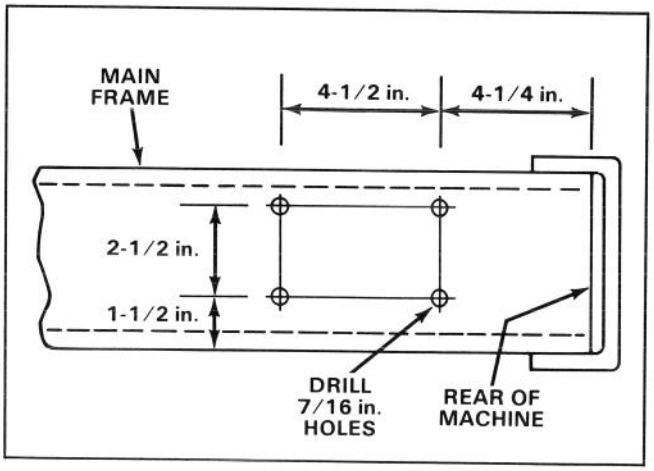

Figure 11

2. Measure an additional 4-1/2 in. forward and scribe a line parallel to the first line (Fig. 11).

3. From the bottom of the frame, measure 1-1/2 in. up each line and center punch each location (Fig. 11).

4. From each center punched location, measure an additional 2-1/2 in. up on each line and center punch each location (Fig. 11).

5. Drill 7/16 in. holes in each location (Fig. 11).

6. Repeat steps 1-5 on the opposite side of the frame.

ASSEMBLE AND MOUNT RIGHT AND LEFT LIGHT ARMS

1. Insert a 10-24 x 1/2 in. machine screw through the 2 in. red reflector, mount to the outer end of each arm and secure to arms with a keps nut (Fig. 12).

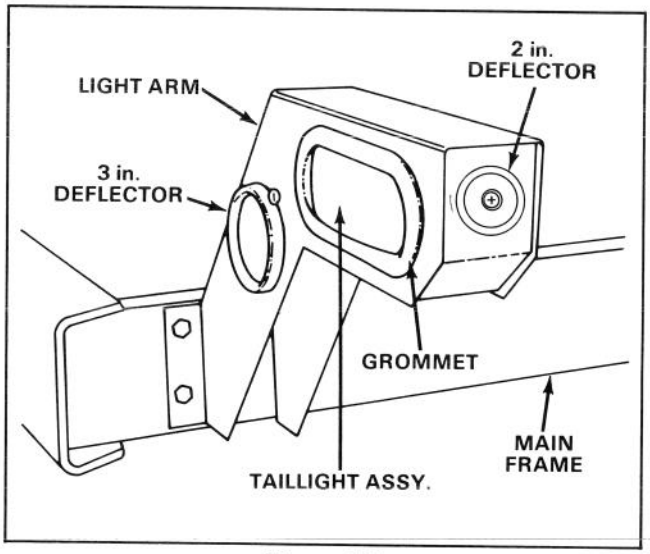

Figure 12

2. From inside each arm install a 3 in. red reflector into each mounting hole and secure the assemblies to the arms with 10-24 x 1/2 in. machine screws and keps nuts (Fig. 12).

3. From the outside of each arm, install a grommet into each mounting hole for the tail lights (Fig. 12).

4. Insert a tail light into each grommet (Fig. 12).

Note: The word "TOP" is embossed into each taillight lens. Be sure this is at the top before installation.

5. Align each arm with the frame mounting holes and secure to the frame with hex head flange screws, lock washers and hex nuts (Fig. 12).

DRILL HOLES AND MOUNT FENDER REFLECTORS

1. Center a rectangular reflector in the lip of the fender and center punch each reflector mounting hole (Fig. 13).

2. Drill 7/32 in. holes and secure reflector to fender with 10-24 x 1/2 in. machine screws and keps nuts (Fig. 13).

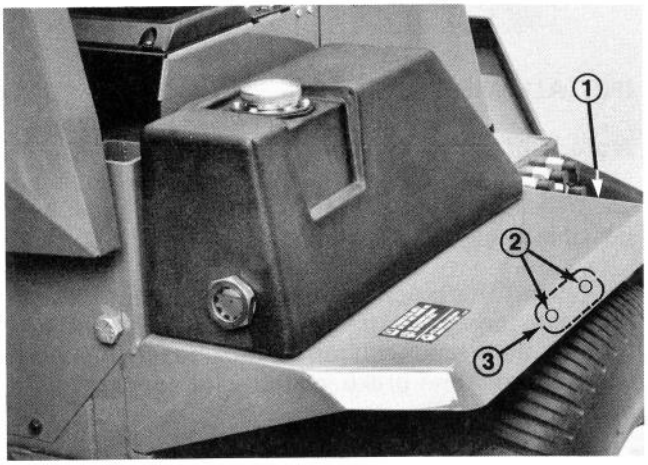

Figure 13

1. Fender
2. Drill 7/32 in. holes
3. Install deflector

3. Repeat steps 1-2 on the opposite fender.

DRILL HOLES AND INSTALL CUTTING UNIT REFLECTORS

1. Position a round amber reflector over the front outboard corner of each side of the front cutting unit and center punch each reflector mounting hole (Fig. 14).

2. Drill 7/32 in. holes and secure reflectors to the cutting unit with 10-24 x 1/2 in. machine screws and keps nuts (Fig. 14).

INSTALL HYDRAULIC SYSTEM BRAKE SWITCH

1. Place a drain pan under the hydraulic pump assembly. Remove and discard the pump plug from the bottom of the pump (Fig. 15).

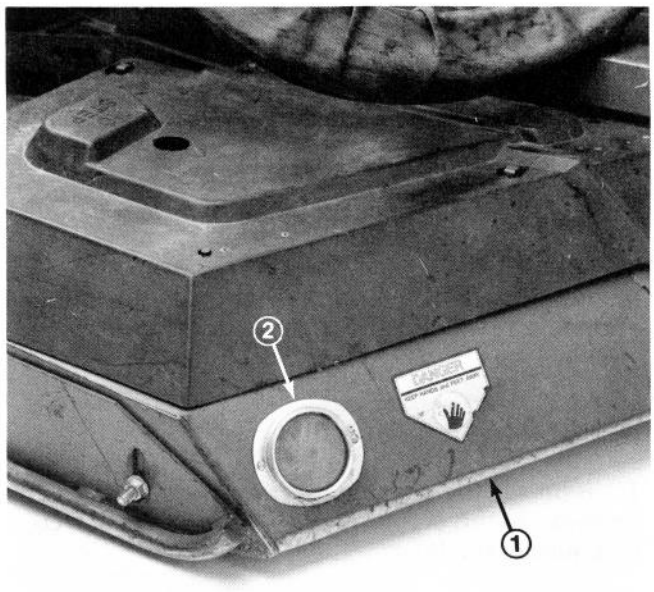

Figure 14

1. Front cutting unit
2. Amber reflector

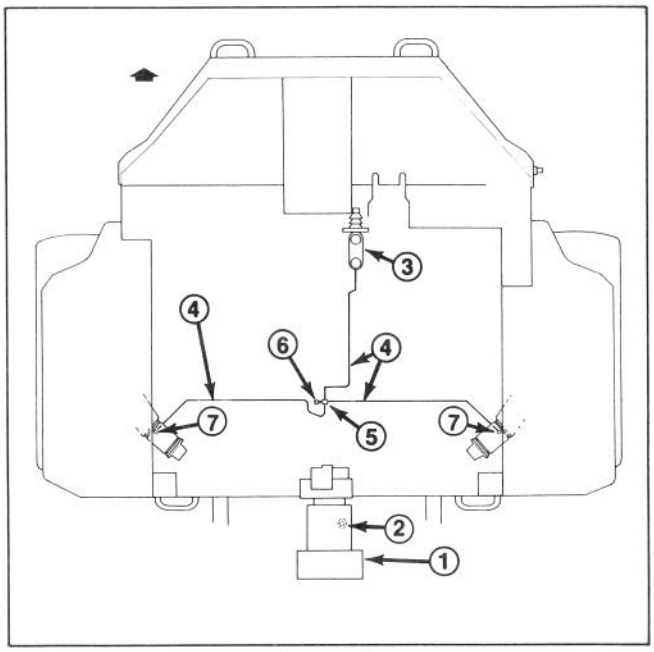

Figure 15

1. Hydraulic pump assy.
2. Remove plug. Install switch. Underside of pump.
3. Brake master cylinder
4. Brake lines
5. Tee fitting
6. Brake switch
7. Brake bleed screws

2. Oil the O-ring seal and install the brake switch into the pump (Fig. 15).

INSTALL BRAKE LINES, BRAKE LINE TEE AND BRAKE SWITCH

1. To avoid contamination, thoroughly clean the area around the wheel brake assemblies and the master cylinder.

2. Place a drain pan under the machine and remove and discard the brake tubing from the master cylinder, both front wheels and the tee fitting connecting the lines together (Fig. 15).

3. Install the new lines and tee fitting.

4. Install the brake switch into the tee fitting (Fig. 15).

5. Refill the master cylinder and bleed the brake assembly; refer to Bleed Brake Assembly.

BLEED BRAKE ASSEMBLY

1. Remove the master cylinder cover and fill the reservoir to the proper level with clean, fresh DOT 3 hydraulic brake fluid.

2. Reinstall the reservoir cover and connect a bleed hose to the bleed screw in the left hand brake housing. Submerge the opposite end of the bleed hose in brake fluid in a clean container.

3. Loosen the bleed screw and have a helper depress the brake pedal. Continue until bubbles cease appearing in the container. The hose end must remain submerged during this process and the master cylinder continually refilled so air is not allowed to enter the system. Tighten the bleed screw when all bubbles are removed.

4. Connect the bleed hose to the right hand brake assembly and bleed the right hand brake assembly.

5. Recheck and, if necessary, top off the master cylinder when the bleeding operation is completed. Discard the brake fluid in the clean container. Do not add it to the system as it may be contaminated.

INSTALL SIGNAL CONTROLLER AND RELAY

1. Remove the steering tower cover.

2. Install signal controller to left side of steering column. Position the signal controller clamp on the right side and tighten the clamp (Fig. 16).

3. Bundle the excess cable together and secure it to a power steering hose with cable ties (Fig. 16).

4. Install a cable tie near where the signal controller harness passes through the steering tower panel. Check to ensure the harness does not contact moving components when the steering column is moved.

5. Clip the eyelet connector off the white wire and strip the insulation back from the end approximately 3/8 in.

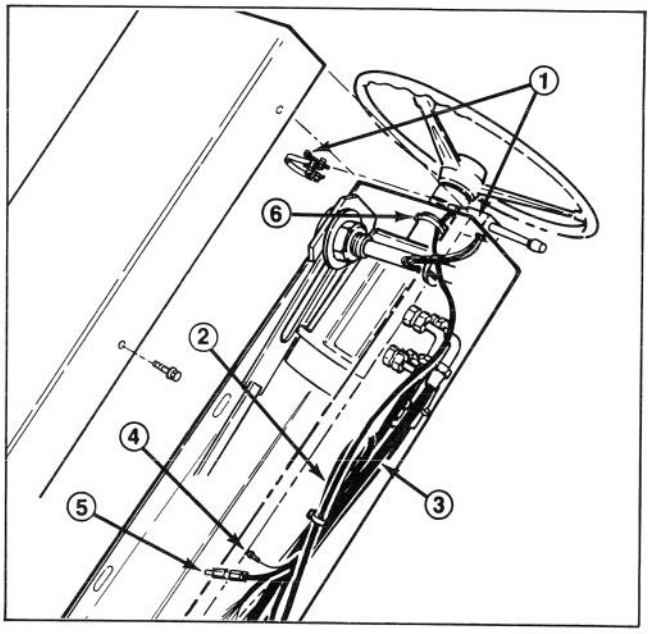

Figure 16

1. *Signal controller and clamp assy.*
2. *Signal controller harness*
3. *Power steering hose*
4. *White wire*
5. *Relay*
6. *Tie strap*

INSTALL WIRE HARNESS

Note: Cut shrink tubing off in approximately 2 in. sections for use with butt connectors. Use cable ties where necessary to prevent the harness from possible damage.

1. Locate the machine main wire harness on the right side forward of the front axle and route the wire harness alongside with turn signal, headlights, horn, control panel and brake switch wire connections at the front (Fig. 17).

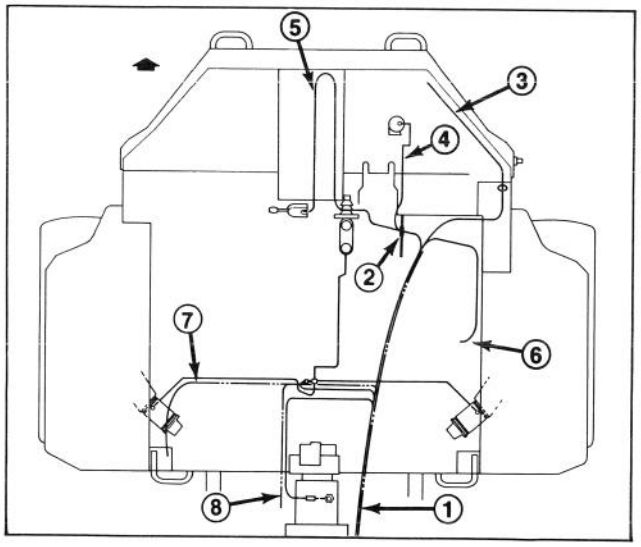

Figure 17

1. *Existing main wire harness.*
2. *Panel with grommet.*
3. *To headlights and horn switch.*
4. *To horn.*
5. *To turn signal controller. Follow existing harness.*
6. *To control panel.*
7. *Fuel tank and oil temp harness. Follow with brake switch wires.*
8. *Neutral switch wires. Follow with pump switch wire.*

2. Connect the harness connector to the brake switch in the hydraulic pump and the two eyelet connectors to the standard brake switch (Fig. 17). Route wires along the harness for the neutral switch, fuel tank and oil temp. indicators.

3. Follow existing harness and route butt connector ends up to the signal controller harness in the steering column. Slip shrink tubing over wires and insert the signal controller wires into the butt connector with matching wire colors (Fig. 17). Crimp the connectors to secure them together and seal with shrink tubing.

4. Install the steering column cover.

5. Slip the wire harness connector onto the horn connection.

INSTALL FRONT SHROUD ASSEMBLY

1. Slide a grommet onto the harness for each headlight assembly. Mount the left and right hand headlight assemblies into the holes on each side of the front shroud and secure with a flat washer, lock washer and hex nut (Fig. 18). Insert the wire harness into each hole and install the grommets (Fig. 18).

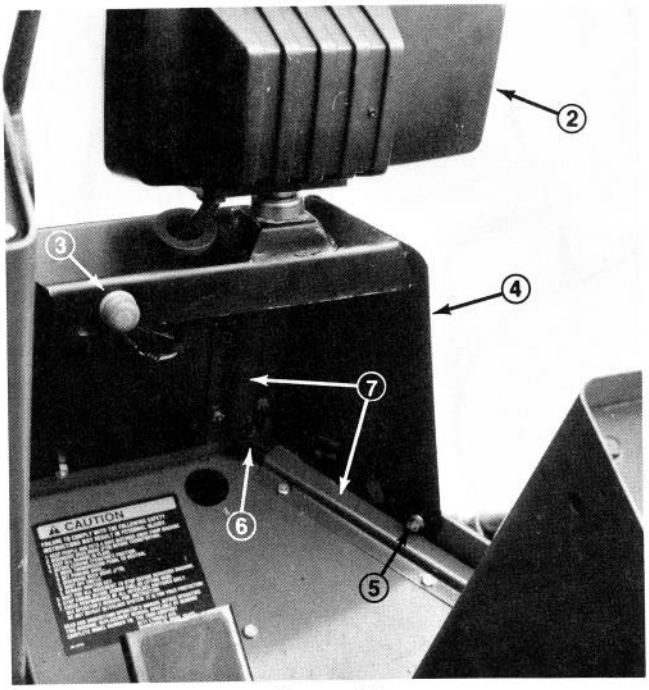

Figure 18

1. *Grommet*
2. *Headlight assembly*
3. *Horn switch assembly*
4. *Front shroud assembly*
5. *Shroud mounting fasteners*
6. *Wire harness*
7. *Wire covers (3)*

2. Assemble the wire assembly to the horn switch. Insert the switch into the shroud and secure with the horn switch cover (Fig. 18).

3. Mount shroud assembly and secure to front main frame with 5/16 x 5/8 in. flange head screws and lock nuts (Fig. 18).

4. Route the wire harness horn and headlight wires up and out the grommet in the front of the diagnostic cover and alongside the right floor plate. Connect to the horn switch and headlight assemblies (Fig. 18). Connect the connector containing the red wire to the right hand headlight assembly. Attach white ground wires to one of the wire cover mounting screws.

5. Install the wire covers. Secure the covers to the shroud with 1/4-20 nuts and the cover on the floor plate with 5/16 x 5/8 in. flange head screws and lock nuts (Fig. 18).

6. Install the shroud trim to the top center edge of the shroud.

INSTALL CONTROL BOX ASSEMBLIES

1. With the control housing removed, route the control box harness outside the valve mount and controller (Fig. 19).

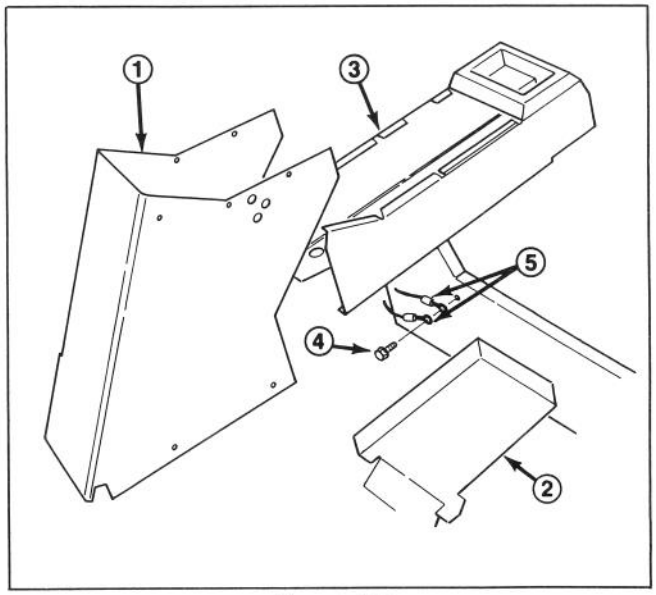

Figure 19

1. *Control housing*
2. *Floor plate*
3. *Control panel support*
4. *Valve bank mounting bracket capscrew*
5. *White wires*

2. Remove a mounting capscrew from the valve bank mounting bracket, slip it through the two eyelet terminals on the white ground wires and reinstall it on the machine (Fig. 19). Install the control housing.

3. Align the fuse block with the mounting holes and secure it to the control support with 10-24 x 3/4 in. machine screws and keps nuts (Fig. 20).

4. Remove the screw securing the multiple red wire assemblies to the circuit breaker (Fig. 20). Insert the screw through the eyelet of the red wire from the fuse block and reinstall the screw and wires onto the circuit breaker (Fig. 20).

5. Install the fuse block decal to the underside of the control box cover just above the fuse block (Fig. 20).

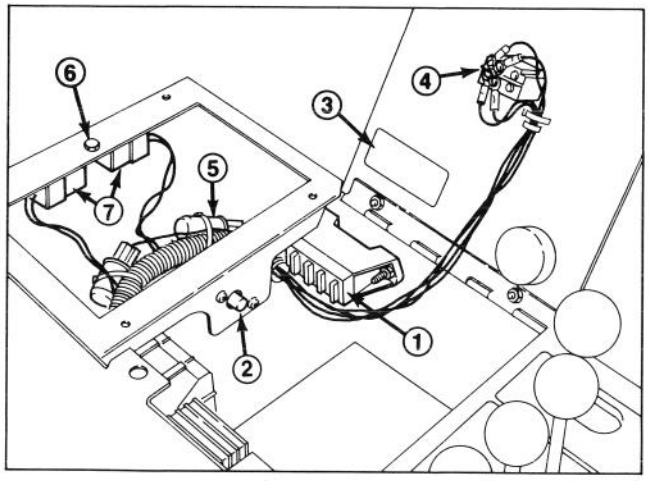

Figure 20

1. *Fuse block*
2. *Circuit breaker*
3. *Decal*
4. *Switch connections*
5. *Signal and warning flashers*
6. *Relay mounting capscrews and nut*
7. *Relay assemblies*

6. Remove the screws from the underside of the light switch and connect the harness wires as follows:

- Purple wire from fuse block — to No. 1.
- Purple wire from warning flasher — to No. 2.
- Brown wire from signal flasher — to No. 4.
- Dual brown wires — to No. 5.

7. Insert the signal and warning flasher assemblies into a harness connector and use tie wires to secure the assemblies to the wire harness (Fig. 20).

8. Insert a 1/4-20 x 1/2 in. capscrew down through the rear hole in the rear plate. Mount the relays onto the capscrew and secure to the plate with a keps nut (Fig. 20).

9. Connect the harness connectors to the relays (Fig. 20).

Note: Use the orange wire with a single connector leading from the warning flasher connector to connect the amber flashing lights in machines with the optional Roll-Over Protection (ROPS) kit and canopy. Use the wire harness normally installed inside the cowl on machines that do not have a ROPS kit installed.

10. Install the cup holder assembly.

INSTALL AMBER FLASHING LIGHTS (Machines without ROPS)

1. Install a flashing light into each hole in the cowl and secure the assemblies with flat washers, lock washers and hex nuts (Fig. 21).

2. On the engine side of the cowl, route the harness up the right side of the radiator and through the 1 in. hole at the top of the cowl (Fig. 22). Secure the wire to the breather tube with cable ties.

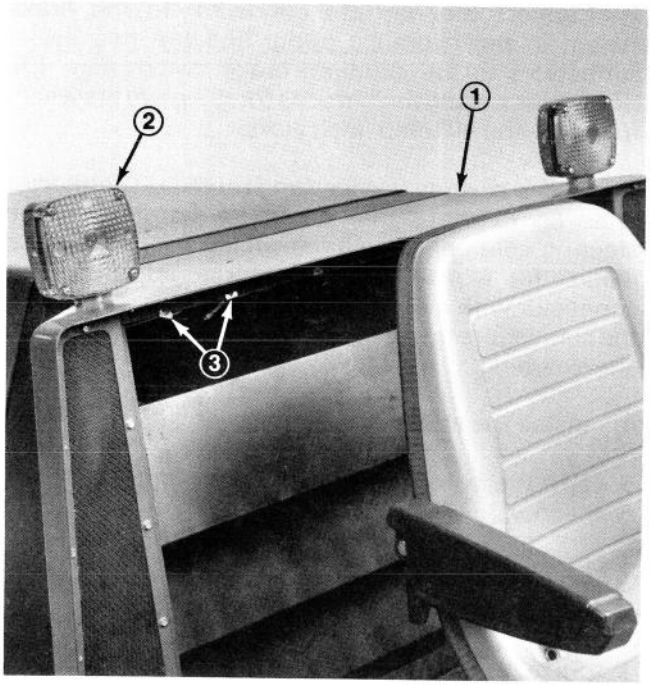

Figure 21

1. *Cowl*
2. *Flashing light*
3. *Wire clips*

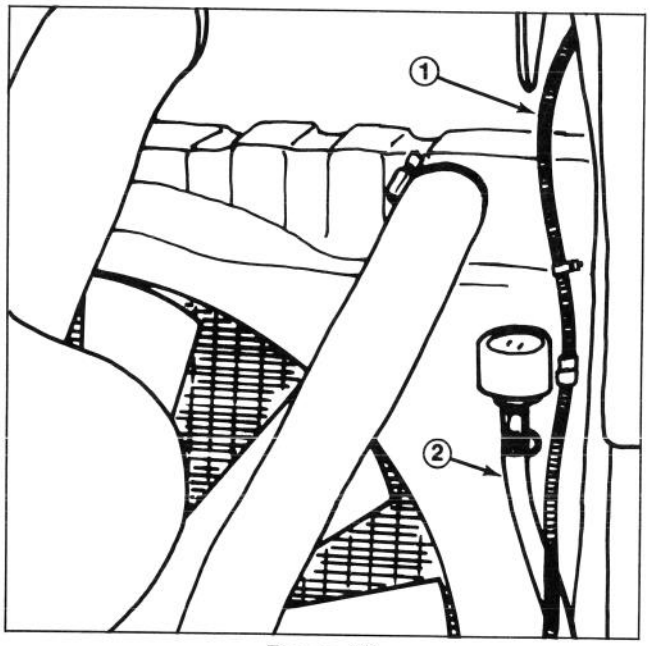

Figure 22

1. *Wire harness*
2. *Breather tube*

3. Connect the harness to each light assembly. Use 4 wire clips to secure the harness for the left flashing light to the top underside of the cowl (Fig. 21).

4. Bundle up any excess wire and secure it in place with cable ties. Install the upper grille in the cowl.

INSTALL AMBER FLASHING LIGHTS (Machines with ROPS)

1. Install a flashing light into each outside hole in the canopy and secure each assembly with flat washers, lock washers and hex nuts (Fig. 23).

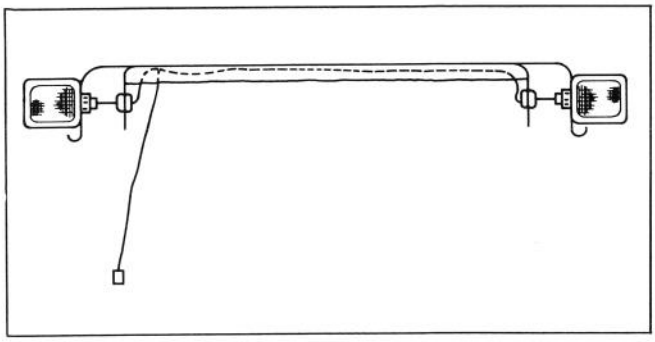

Figure 23

2. Route the harness wire up the right hand ROPS frame to the canopy (Fig. 24).

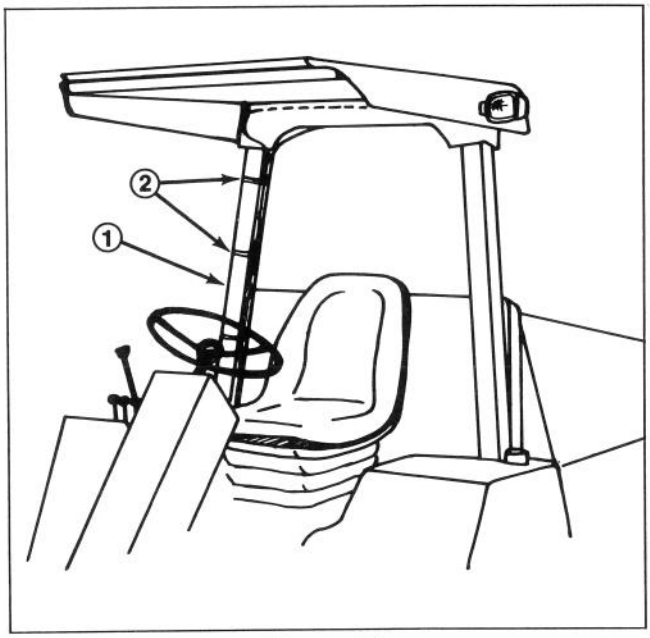

Figure 24

1. ROPS frame 2. Tie straps

3. Insert each harness butt connector through the grommet in the inner walls of the ROPS canopy, slip a 2 in. section of shrink tubing over each wire and connect them to the flashing lights (Fig. 23). Seal the connections with the shrink tubing.

4. Use cable ties to secure the harness to the ROPS frame. Peel the top canopy insulation back slightly at the canopy rear and insert wire harness.

CONNECT HARNESS TO REAR TAILLIGHT ASSEMBLIES

1. Route the harness down the right side of the engine along the 1 in. diameter steel hydraulic tubing to the back bumper. Use cable ties to secure the harness to the original machine wire harness, as needed (Fig. 26).

2. Connect the right hand harness connector to the right hand taillight assembly connector (Fig. 25).

3. Connect the left hand harness connector to the left hand taillight assembly connector (Fig. 25).

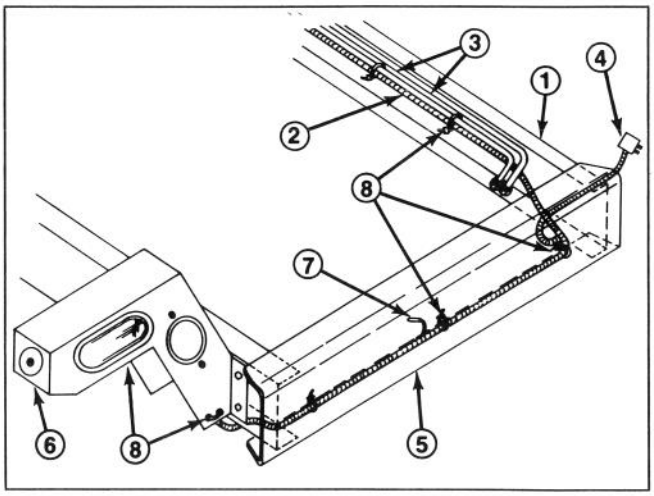

Figure 25

1. R.H. machine frame
2. Wire harness
3. 1 in. steel tubing
4. R.H. taillight connector
5. Back bumper
6. L.H. taillight assembly
7. For license plate light
8. Tie straps

4. Insert cable ties through the holes in each arm and secure the harness to the arms (Fig. 25).

Note: An extra brown lead with connector is included for connection to a license plate light assembly, should one be necessary (Fig. 25).

5. Insert cable ties through the drilled holes in the rear bumper and secure the taillight wire harness to the bumper (Fig. 25).

INSPECTION AND CHECKS

1. Carefully retrace the harness and components and inspect for possible loose connections, harness interference with other machine components, etc. Add cable ties where needed and make necessary corrections.

2. Reconnect the negative (–) battery leads to the batteries and check the system for proper function.

ADJUST THE HEADLIGHTS

1. Loosen the mounting nut and position each headlight so it points straight ahead. Tighten the mounting nuts just enough to hold the headlights in position; proceed to step 2.

2. Use a flat piece of sheet metal large enough to fit over the three glass protrusions on the face of the headlights and place it over a headlight (Fig. 26).

3. Mount a magnetic protractor onto the plate (Fig. 26). Hold the assembly in place and carefully tilt the headlight downward 3 degrees (Fig. 26). Tighten the mounting nut.

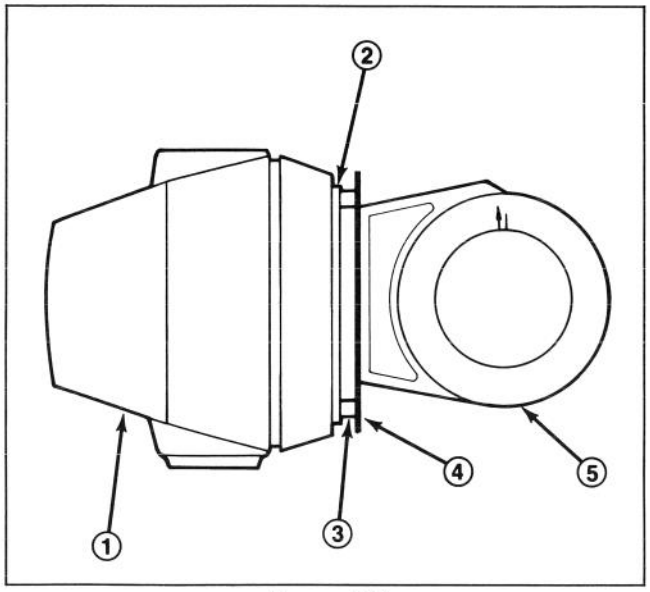

Figure 26

1. *Headlight assy.*
2. *Headlight lens*
3. *Glass protrusion (3)*
4. *Flat metal plate*
5. *Magnetic protractor*

4. Repeat step 3 on the opposite headlight and recheck both adjustments.

Note: Magnetic protractors are listed in the Toro Commercial Service Tools catalog under Part No. TOR2968.

OPERATING INSTRUCTIONS

WARNING

To adhere to safety standards, be sure the slow moving vehicle (SMV) sign is mounted on the rear of the machine and the 4-way flashers are actuated before beginning operation on roadways. Always check local and state regulations for compliance before beginning operation. To avoid accidents, always signal your intent to turn well in advance of turning.

LIGHT SWITCH OPERATION

- Rear Position — OFF.
- Center Position — Amber flashing lights on.
- Forward Position — Amber flashing lights and headlights and taillights on.

SIGNAL CONTROLLER OPERATION (Fig. 27)

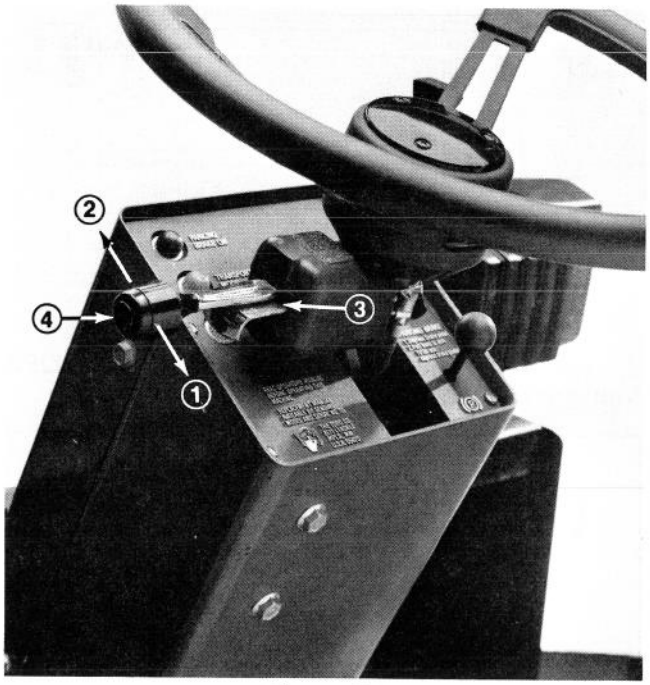

Figure 27

1. *Left turn signal*
2. *Right turn signal*
3. *Emergency flasher switch — Pull out to actuate.*
4. *Hi-Lo headlight beam switch — Push in to switch beams.*

1. To signal turns:

   Move switch handle in direction of turn.

2. To operate emergency flashers:

   With switch handle in neutral position, pull flasher switch out. All signal lamps will flash for all-round vehicle protection.

3. To release emergency flashers:

   Move switch handle left or right. Flasher will release automatically. Return switch handle to neutral position.

4. To operate Hi/Lo beams:

   Push handle button in to activate Hi/Lo beams. Re-push button to return to regular headlights.

BRAKE LIGHT FUNCTIONS

When the service brake is depressed, the brake lights will illuminate. However, the brake lights will also illuminate when the machine is being slowed by action of the hydrostatic transmission or when it is being operated in reverse.

ELECTRICAL SCHEMATIC

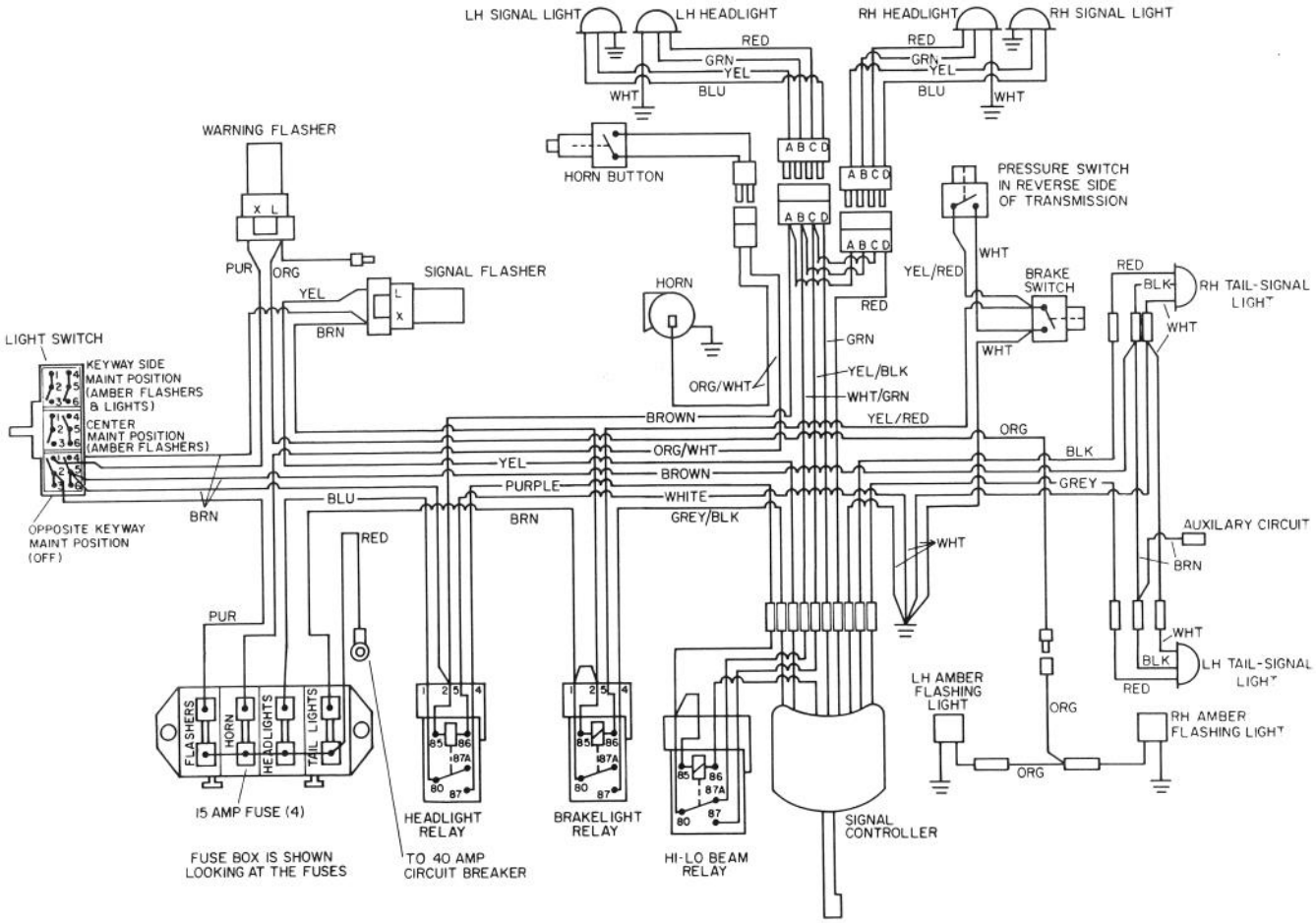


TORO®