TORO®

OWNER'S OPERATING AND PARTS MANUAL

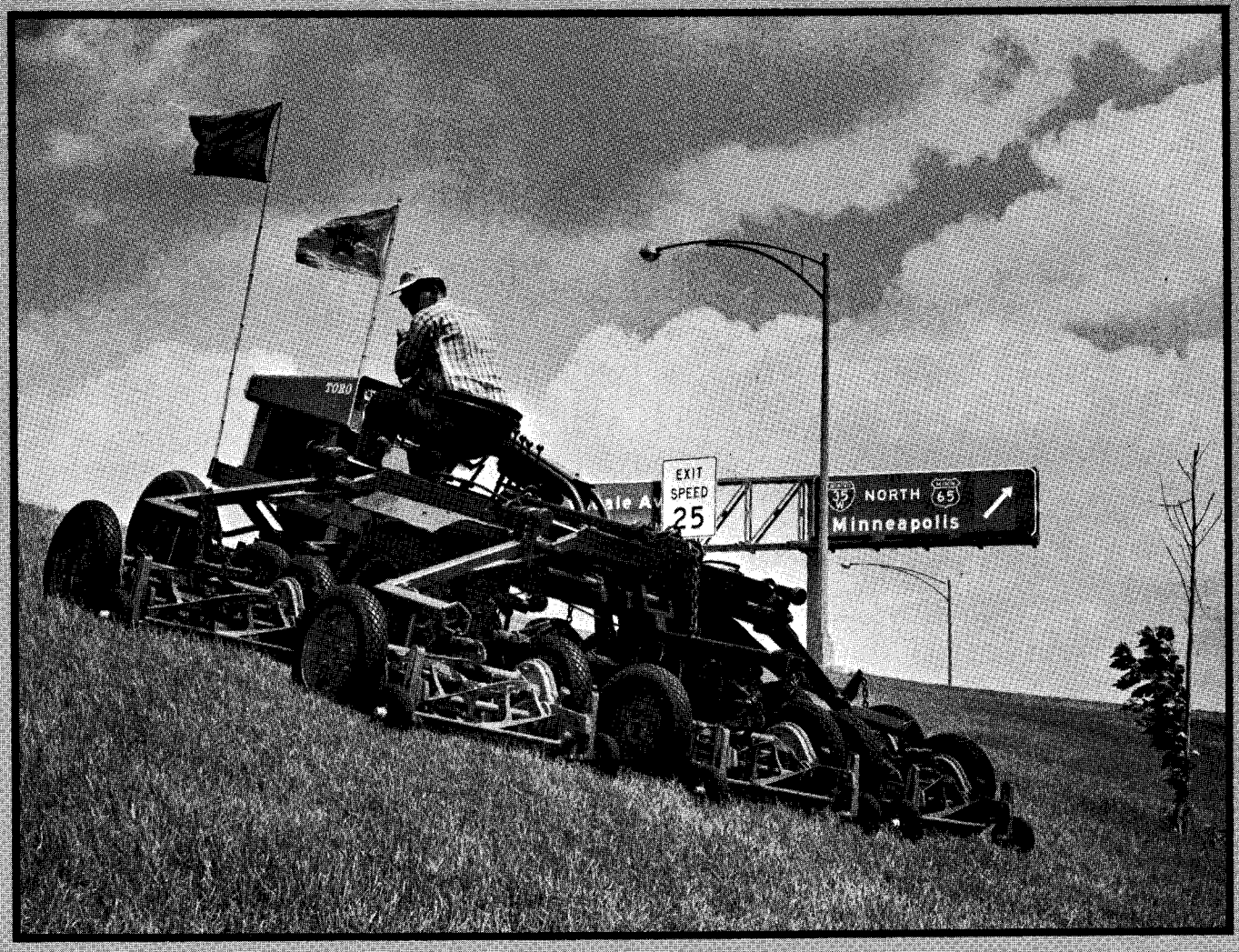

7 UNIT HYDRAULIC ROADMASTER

MODEL NOS. 37022 & 37023

1963

BOOK NO. 89

Price 25 cents

MAIN FRAME ASSEMBLY

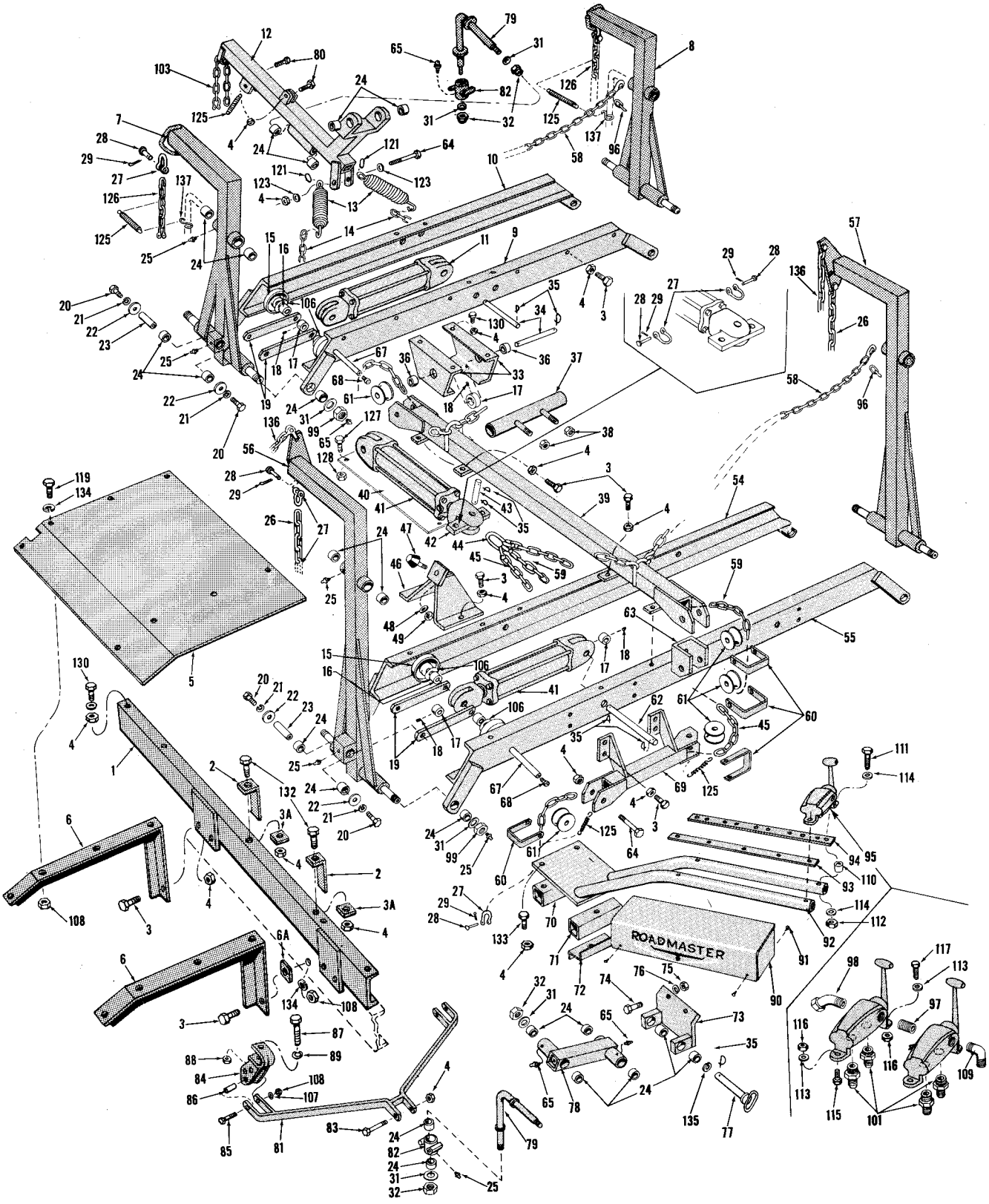

Drawing No. 89-4

MAIN FRAME ASSEMBLY PARTS LIST

Ref. No.	Part No.	Description	No. Used
1	3-4608	Side Channel, Right	1
*	3-4606	Side Channel, Left	1
2	3-0236	Hose Clip	2
3	3213-3	Screw	37
3A	3290-216	Washer, Use w/Ref. 3 & 4	39
4	32118-3	Nut	75
5	3-4596	Mudguard, Right	1
*	3-4597	Mudguard, Left	1
6	3-6520	Mudguard Bracket	4
6A	3-4591	Spacer	2
7	3-0251	Arm, Drawbar & Lift Bail	1
8	3-0252	Arm, Drawbar & Lift Bail	1
9	3-0282	Rear Cross Channel, Front	1
10	3-0124	Rear Cross Channel, Rear	1
11	353-121	Cylinder, 10" Less Pins	2
12	3-0224	Rear Drawbar	1
13	5P-38A	Spring	2
14	3-0295	Chain, 22 Links	2
15	243-4	Trolley Wheel	8
16	3-0145	Spacer	8
17	3-0156	Collar	9
18	3287-7	Set Screw	9
19	3-0125	Link	8
20	3211-4	Screw	8
21	3253-5	Lockwasher	8
22	LU-323	Washer	8
23	3-0128	Shaft	4
24	3-0348	Bushing	54
25	302-5	Grease Fitting	17
26	3-4976	Chain, 8" Long	2
27	282-13	Yoke	20
28	283-10	Pin	20
29	3272-10	Cotter Pin	20
31	GM224	Washer	22
32	32118-5	Nut	10
33	3-0146	Channel	2
34	3-0144	Shaft	3
35	K-139	Spring Pin	13
36	3-0145	Spacer	2
37	3-4250	Tube	1
38	3296-6	Nut	5
39	3-0105	Channel Brace	1
40	3-0175	Plate	1
41	353-125	Cylinder, 12" Less Pins	3
42	3-0288	Link	1
43	353-60	Pin	1
44	3-0326	Ring	1
45	3-4601	Chain, 57" Long	2
46	3-0285	Arm Stop	2
47	212-183	Rubber Bumper	2
48	3256-3	Washer	2
49	3296-5	Nut	2
54	3-1382	Front Cross Channel, Rear	1
55	3-1384	Front Cross Channel, Front	1
56	3-6630	Arm, Draw Bar & Lift Bail	1
57	3-6640	Arm, Draw Bar & Lift Bail	1
58	3-0297	Chain, Safety, 15¾" LessHooks	4
59	3-4602	Chain, 90-7/8" Long	1
60	3-0136	Chain Keeper	7
61	3-2196	Sheave	7
62	3-0144	Shaft	2
63	3-0112	Bracket, Sheave	1
64	3213-19	Screw	8
65	302-13	Grease Fitting	11
67	3-0130	Shaft	4
68	3290-118	Special Screw	8

Ref. No.	Part No.	Description	No. Used
69	3-6680	Side Mower Tube, Right	1
*	3-6690	Side Mower Tube, Left	1
70	3-0166	Spacer Tube, Rear	1
71	3-0165	Spacer Tube, Front	1
72	3-0270	Spacer	1
73	3-2225	Bracket w/Bushings	2
74	3214-4	Screw	4
75	3219-6	Nut	4
76	3253-8	Lockwasher	4
77	3-0152	Pin	2
78	3-0151	Arm, Front	2
79	3-6530	Lift Bail	7
80	3213-6	Screw	2
81	3-6510	Draw Bar	7
82	3-0255	Bushing Housing	7
83	3213-12	Screw	7
84	F-732	Clamp, Drawbar	14
85	3213-9	Screw	14
86	F-733	Spacer	14
87	3212-10	Screw	14
88	3219-4	Nut	14
89	3253-6	Washer	14
90	3-0225	Valve Cover	1
91	32104-29	Screw	3
92	3-0164	Valve Stand	1
93	3-0150	Valve Bracket, Rear	1
94	3-0148	Valve Bracket, Front	1
95	353-57	Control Valve	5
96	3-0293	Chain, 2 Links	4
97	289-14	Nipple	4
98	353-130	Swivel Adapter 45°	1
99	32118-6	Nut	4
*	304-55	Street Ell	1
101	304-59	Adapter	10
*	304-58	Adapter	10
*	353-141	Valve Safety	1
*	304-56	Nipple	1
103	3-1364	Chain, 32 Links	1
106	3256-5	Washer	8
107	3254-4	Lockwasher	14
108	3219-5	Nut	32
109	304-57	Adapter	1
110	3-0453	Spacer	4
111	329-22	Screw	4
112	3219-1	Nut	4
113	3256-2	Washer	13
114	3256-22	Washer	4
115	329-13	Screw	3
116	3296-3	Nut	15
117	329-5	Screw	8
119	3213-15	Screw	16
*	3-4063	Trim Moulding	1
121	2830-8	Link	2
123	3256-26	Washer	2
125	1P-44	Spring	5
126	3-4636	Chain, 6-5/8" Long	2
127	3211-5	Screw	3
128	3296-6	Nut	5
130	3213-4	Screw	15
*	304-61	Clip	2
132	3213-2	Screw	2
133	3213-10	Screw	3
134	3253-7	Washer, Lock	18
135	3256-30	Washer	2
136	3-4977	Chain	2
137	3-2198	Hook	2

* Not Illustrated

ATTACHING MOWER TO ARMS

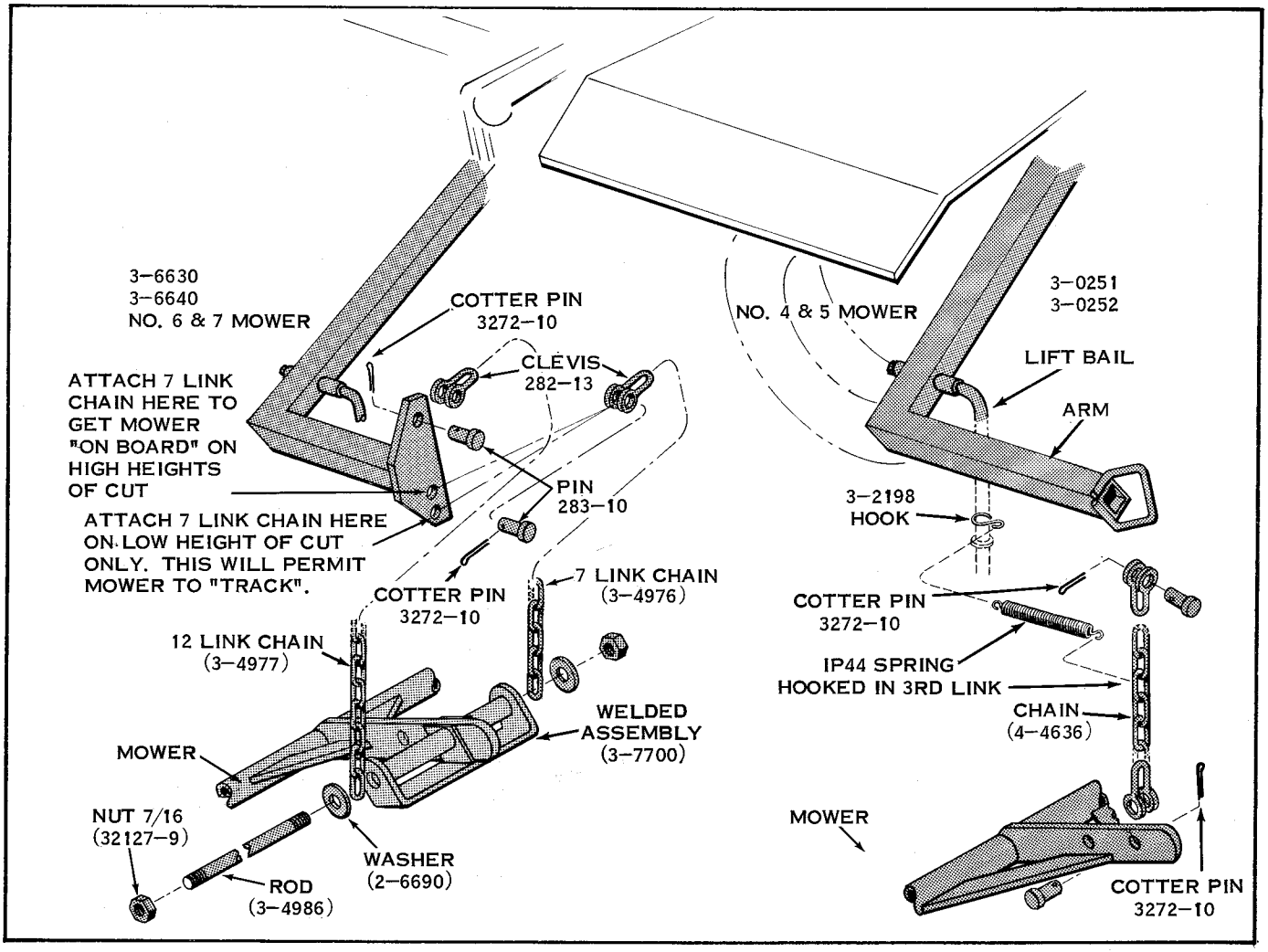

OPERATING INSTRUCTIONS

HYDRAULIC SYSTEM AND CONTROLS

The hydraulic system includes four double-acting hydraulic cylinders for raising and lowering the wing mowers, and one double-acting cylinder for raising and lowering the underslung side mowers and the rear center mower. Other components of the hydraulic system include hydraulic pump, hydraulic fluid tank, filter, lines and controls.

FILLING THE HYDRAULIC SYSTEM

Fill the oil reservoir, located under the hood with a good grade of S. A. E. 20 non-detergent motor oil, or with a type A transmission oil.

TO RAISE WING MOWERS FOR TRANSPORT

With the tractor engine running, pull down on wing mower controls (see control panel cover on tractor) until the wing mowers swing into position. The control levers will snap back into neutral position when each unit is fully raised.

TO LOWER WING UNITS FOR MOWING

Remove 4 safety chains from mowers and, with all control levers in neutral position, push down on the wing mower control. Lever will snap back into neutral position when mower is fully lowered. A restrictor valve will slow the mower descent.

TO RAISE UNDERSLUNG AND CENTER UNITS

PULL DOWN on the center lever control and release. Underslung and rear center mowers will raise into position and the control lever will snap back to neutral position. Snap 4 safety chains into place and the Hydraulic Frame is now ready for transport.

TO LOWER UNDERSLUNG AND CENTER UNITS

PUSH DOWN on the center control lever to lower the left and right underslung and rear center mowers simultaneously. This lever will snap back to neutral position when mowers are fully lowered and can be left in this position for mowing.

CAUTION: BEFORE RAISING OR LOWERING MOWERS, EACH TIME CHECK TO MAKE SURE THAT NO PERSONS ARE WORKING ON, OR ARE NEAR, THE CUTTING UNITS.

CONTROL VALVE ASSEMBLY

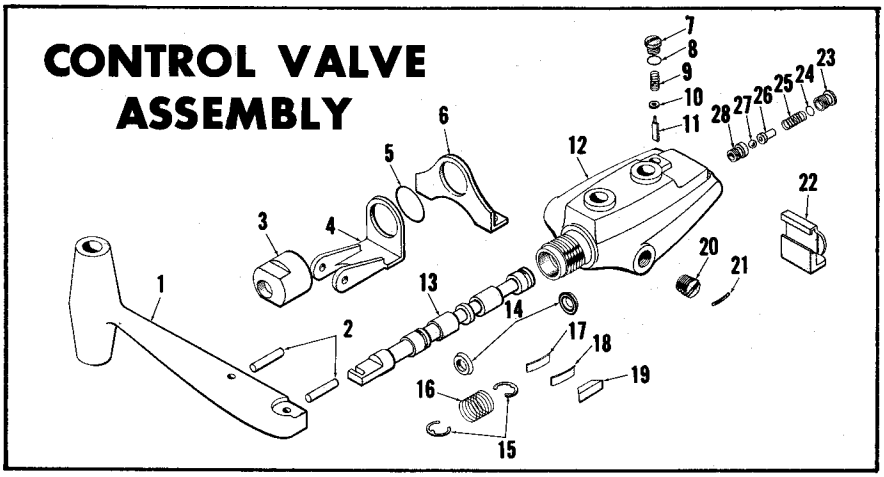

Ref. No.	Part No.	Description	No. Used
1	353-93	Handle	1
2	32121-33	Pin	2
3	353-91	End Cap	1
4	353-96	Bracket	1
5	237-29	"O" Ring	1
6	353-97	Bracket	1
7	353-114	Cap, Detent	1
8	237-30	"O" Ring	1
9	353-115	Spring	1
10	353-95	Bushing	1
11	353-100	Blade	1
12	353-113	Valve Block	1
13	353-94	Valve Spool	1
14	253-79	Seal	2

Ref. No.	Part No.	Description	No. Used
15	32120-56	Snap Ring	2
16	353-89	Spring	1
17	353-108	Shuttle Spring	1
18	353-99	Shuttle Spring	1
19	353-98	Shuttle	1
20	353-103	Plug	1
21	353-101	Lock Wire	1
22	353-92	End Cap	1
23	353-102	Spring Retainer	1
24	237-28	"O" Ring	1
25	353-88	Spring	1
26	353-111	Ball Retainer	1
27	255-2	Ball	1
28	353-112	Relief Valve Seat	1

CYLINDER ASSEMBLY

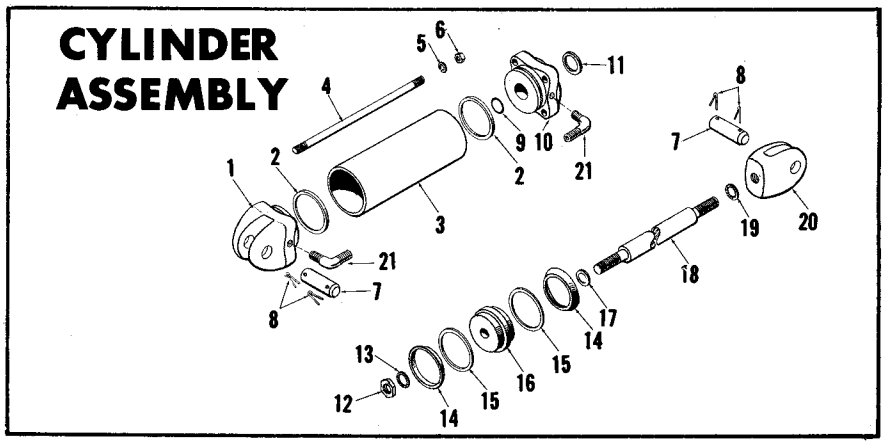

Ref. No.	Part No.	Description	No. Used
1	353-72	Clevis End Cap	1
2	353-65	Seal, End Cap	2
3	353-70	Tube, 8"	1
*	353-122	Tube, 10"	1
*	353-126	Tube, 12"	1
4	353-77	Tie Rod, 8"	4
*	353-123	Tie Rod, 10"	4
*	353-127	Tie Rod, 12"	4
5	3254-3	Lockwasher, 7/16" Int.	4
6	3219-4	Nut, 7/16" N. F.	4
7	353-76	Pin	2
8	3272-49	Cotter Pin	4
9	353-64	Seal	1

Ref. No.	Part No.	Description	No. Used
10	353-73	Top End Cap	1
11	353-66	Seal Ring Wiper	1
12	3219-7	Nut, 3/4" N. F.	1
13	3254-7	Lockwasher, 3/4" Int.	1
14	353-68	Block V Seal	2
15	353-69	Backup Washer	2
16	353-74	Piston	1
17	353-67	Fibre Washer	1
18	353-75	Piston Rod, 8" and 10"	1
*	353-128	Piston Rod, 12"	1
19	3254-13	Lockwasher, 7/8" Int.	1
20	353-71	Rod End Clevis	1
21	304-58	Adapter	10

* Not Illustrated

TORO POWER MOWERS

Toro power mowers and Power Handle implements are designed and built to give years of precision performance . . . to make them "the best you can buy." And there's over 40 years of manufacturing experience to back them up.
One of Toro's most important objectives — and one which has helped make Toro the world's largest manufacturer of power mowers — is to provide the customer with complete local service and parts. This Toro has done through an extensive chain of service dealers, factory-trained to give you the most careful, competent care for your Toro work-saver.



19" WHIRLWIND



21" HAND PROPELLED WHIRLWIND

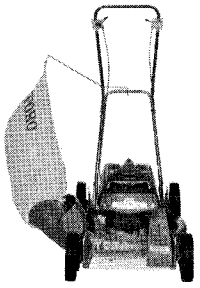

21" SELF-PROPELLED WHIRLWIND



21" SPORTLAWN



25" PARKLAWN

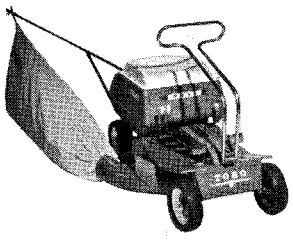

25" PONY

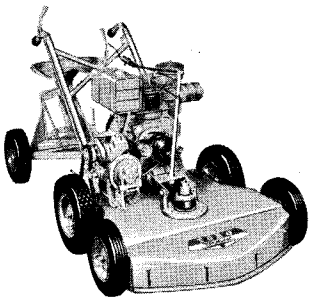

31" GRASSKING

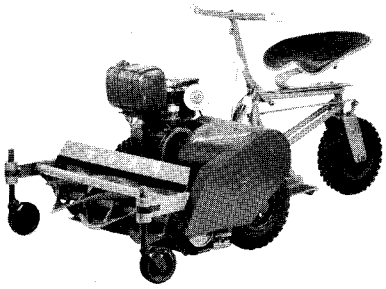

30" PARKLAWN

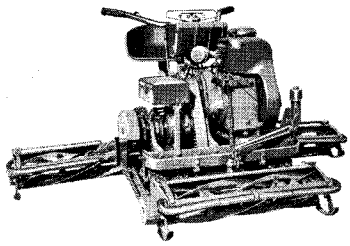

76" PROFESSIONAL

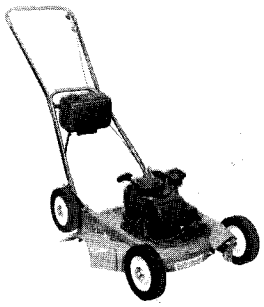

21" HEVI-DUTY WHIRLWIND

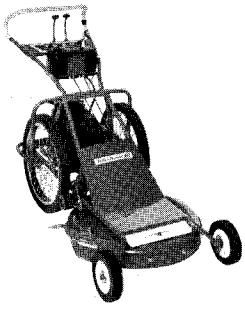

25" HEVI-DUTY WHIRLWIND

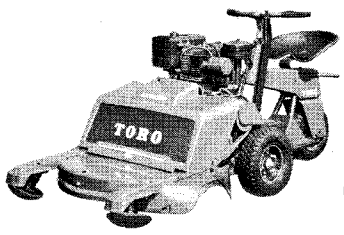

32" SELF-PROPELLED WHIRLWIND

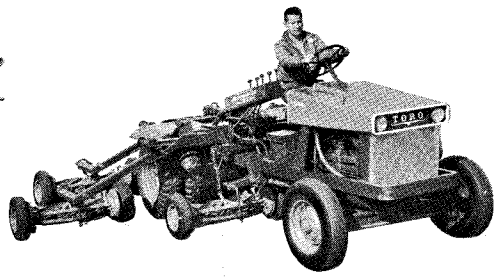

7 UNIT HYDRAULIC PARKMASTER

Reel Mower or Rotary Mower . . . Self Propelled or Riding Mower . . . Whatever your preference in Power Mowers, Toro makes a model to fit your needs. Choose from Toro's complete line of fine mowing equipment.

Toro has a mower that's just right for you. And Toro Mowers are the best you can buy!

TORO MANUFACTURING CORPORATION - Minneapolis 6, Minnesota, U.S.A.

LITHO IN U. S. A.

TORO *Builds the right Power Mower for every need!*