FORM NO. 3312-529

TORO®

MODEL NO. 58070 - 5000101 & UP

**OPERATOR'S MANUAL**

# 5 hp FRONT TINE TILLER - CHAIN DRIVE

To assure maximum safety, optimum performance, and to gain knowledge of the product, it is essential that you or any other operator of the tiller read and understand the contents of this manual before the engine is ever started. Pay particular attention to the SAFETY INSTRUCTIONS highlighted by this safety alert symbol —

The symbol means CAUTION, WARNING or DANGER — personal safety instruction. Failure to comply with the instruction may result in personal injury.




PRICE $1.00

Part No. 238612

Printed in U.S.A. 9-84

# FOREWORD

The TORO Tiller has advanced concepts in engineering, design, and safety. If set-up and maintained properly, the tiller will give long, dependable service.

Since the tiller is a high-quality product, TORO is concerned about the future use of the tiller and safety of the user. Therefore, read this manual carefully to familiarize yourself with the safety instructions and the product before operating the tiller. The seven major sections of the manual are:

1. Safety Instructions
2. Set Up Instructions
3. Before Operating
4. Controls and Operating Instructions
5. Maintenance
6. Engine Operating and Maintenance Instructions
7. Trouble Shooting

Note that safety, mechanical, and some general information in the manual is emphasized. The words CAUTION, WARNING, DANGER, IMPORTANT, and NOTE are used to classify the information. CAUTION, WARNING, and DANGER identify safety related information; and NOTE identifies general information worthy of special attention.

### OPTIONAL SPARK ARRESTER

In some areas there are local, state or federal regulations requiring that a spark arrester be used on the engine of this tiller. If a spark arrester is required, order from your local Briggs & Stratton dealer.

Notice to customers in the State of California - The engine on this unit is **NOT** equipped with a spark arresting muffler.

**WARNING**

When tiller is used or operated on any California forest, brush or grass covered land, a working order spark arrester must be attached to muffler. If not, the operator is violating state law, Section 4442 Public Resources Code.

If help - concerning set-up, operation, maintenance, or safety - is ever needed, contact the local Authorized TORO Service Dealer or Distributor. Refer to the "Yellow Pages" for assistance. In addition to skilled service technicians, the dealer and distributor have other TORO products, as well as factory approved accessories and replacement parts. Keep your Toro Tiller all TORO. Buy genuine TORO replacement parts and accessories.

# TABLE OF CONTENTS


| | Page |
|---|---|
| Safety Instructions | 3 |
| Before Operating | 3 |
| While Operating | 3 |
| Maintaining Tiller | 3 |
| Hardware Bag Contents | 4 |
| Set-Up Instructions | 5 |
| Before Operating | 7 |
| Fill Crankcase With Oil | 7 |
| Fill Fuel Tank With Gasoline | 7 |
| Controls | 7 |
| Clutch Lever | 7 |
| Throttle Control | 7 |
| Depth Control | 7 |
| Operating Instructions | 8 |
| Starting and Stopping Instructions | 8 |
| Versatile Tine Combinations | 8 |
| Tiller Maintenance | 9 |
| Adjustment and Servicing: | |
| Clutch Control Adjustment | 9 |
| Wheel Hanger Adjustment | 9 |
| Belt Stretch and Replacement | 9 |
| Lubrication: | |
| Engine | 10 |
| Chain Case | 10 |
| Wheels | 10 |
| Storage | 10 |
| Engine Operating and Maintenance | 11 |
| Before Starting | 11 |
| Starting | 12 |
| Maintenance | 12 |
| Adjustments | 14 |
| General Information | 14 |
| Storage | 14 |
| Trouble Shooting | 15 |
| Identification and Ordering | 20 |
| The Toro Promise | 20 |




COPYRIGHT © ALL RIGHTS RESERVED
**The Toro Company – 1982**
MINNEAPOLIS, MN 55420 – U.S.A.

# SAFETY INSTRUCTIONS



**This safety alert symbol means CAUTION, WARNING or DANGER - "personal safety instruction". Read and understand the instruction because it has to do with safety. Failure to comply with the instruction may result in personal injury.**

The following "Instructions for Safe Tilling" are suggested by The Toro Company. Failure to operate the tiller in accordance with these Safety Instructions MAY RESULT IN PERSONAL INJURY.

## BEFORE OPERATING

1. Read and understand the contents of this manual before starting and operating the tiller. Become familiar with all controls and know how to stop tiller quickly. NEVER ALLOW CHILDREN TO OPERATE TILLER.

2. Keep everyone, especially children and pets, away from the area of operation. Remove glass, metal objects, sticks, stones, wire and any other debris that might get caught in or possibly be thrown by the tines.

3. Keep all shields and safety devices in place. If shield, safety device or decal is defective, repair or replace it before operation is commenced. Also tighten any loose nuts, bolts and screws.

4. Wear long pants and substantial shoes while using the tiller. Do not operate tiller while barefoot, wearing sandals, tennis shoes, sneakers or shorts.

5. Fill fuel tank with gasoline before starting the engine. Avoid spilling any gasoline. Since gasoline is highly flammable, handle it carefully.

   A. Use an approved gasoline container.

   B. Fill tiller fuel tank outdoors when engine is cool. Engine must not be running to prevent a potential hazard.

   C. Wipe up any gasoline that may have spilled, and install gasoline container cap and tiller fuel tank cap before starting the engine.

## WHILE OPERATING

6. Open doors if engine will be run in the garage because exhaust fumes are dangerous and could possibly be deadly. Do not run engine indoors.

7. Do not operate the tiller if someone is near the area to be tilled.

8. Tilling the soil demands attention. Always maintain secure footing, balance and control.

9. Till the soil when it is dry or moist because wet or sticky soil can cause mechanical damage.

10. Keep face, hands, feet and any other part of the body or clothing away from concealed, moving or rotating parts such as the tines, belts and pulleys. Stay behind the handles and away from the tines while operating the tiller.

11. Release clutch control, shut engine off and wait for all parts to stop before removing any obstruction from the tines. Use a stick to remove the obstruction.

12. If a solid object is hit by the tines or tines get plugged, release clutch control and shut engine off. Remove high tension wire from spark plug; then check for possible damage, an obstruction or loose parts. Use a stick to remove any obstruction, and make all repairs before using the tiller again.

13. Before leaving the operator's position - behind handles - release clutch control and shut engine off. Pull high tension wire off spark plug to prevent possibility of accidental starting.

14. Do not touch the engine while it is running or soon after it is stopped because the engine may be hot enough to cause a burn.

## MAINTAINING TILLER

15. Before performing any maintenance or servicing the tiller, shut engine off and pull high tension wire off spark plug to prevent possibility of accidental starting.

16. Perform only those maintenance instructions described in this manual. If major repairs are ever needed or assistance is desired, contact an Authorized TORO Service Dealer.

17. Keep tiller in safe operating condition by having nuts, bolts and screws tight.

18. To reduce potential fire hazard, make sure engine and tiller chassis is free of excessive grease, vegetation, dirt and other foreign matter.

19. Do not overspeed the engine by changing governor settings. Recommended engine speed is 3600 rpm. To assure safety and accuracy, have an Authorized TORO Service Dealer check maximum engine speed (3600 rpm) with a tachometer.

A2309

# HARDWARE BAG CONTENTS

The items illustrated below are used during the assembly of your Tiller. The illustrations are drawn actual size and can be helpful in determining the correct hardware needed in each assembly step. The quantity of each item is shown in parenthesis.



(4)
3/8 x 1"
Hex Hd. Cap Screw
Grade 5

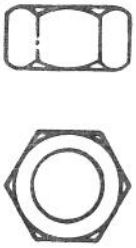

(4)
3/8 Hex Nut
"Coarse Thread"

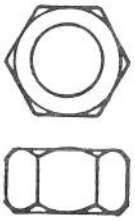

(2)
3/8 Hex Nut
"Fine Thread"

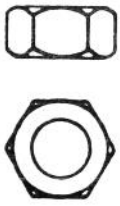

(1)
5/16 Hex Nut



(1)
3/32 x 3/4
Cotter Pin

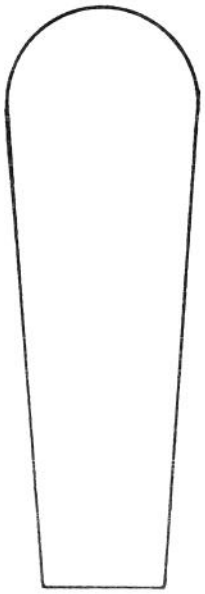

(1)
Knob



(6)
3/8 Lock Washer

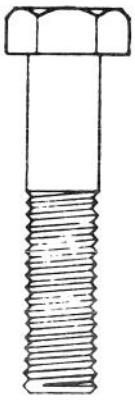

(2)
3/8 x 1 3/4
Hex Hd. Cap Screw
Grade 5
"Fine Thread"

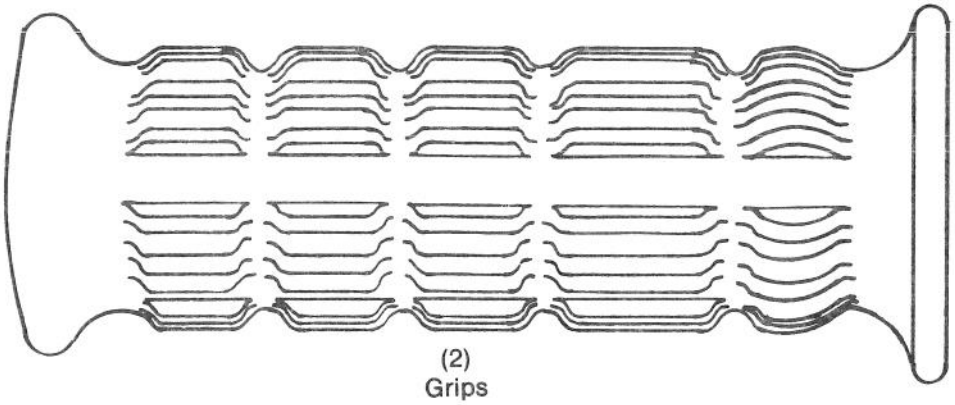

(2)
Grips

B2608

# SET-UP INSTRUCTIONS

This tiller is shipped in one carton completely assembled except for the handle, control rod and outer tine hub assemblies. A hardware bag is also furnished which contains all the extra parts and hardware needed to assemble the tiller correctly. **NOTE: Page 4 illustrates the hardware bag contents (drawn actual size).** Use this page for correct identification of hardware items used during assembly.

**CUSTOMER NOTICE!** The engine on this tiller was shipped without oil in the crankcase. If engine is started before oil is added to the crankcase, engine damage could result. Be sure to read and follow all SET-UP, BEFORE OPERATING and CONTROLS AND OPERATION instructions in this operator's manual.

**IMPORTANT!**

**All items marked with an asterisk (*) can be found in the hardware bag.**

1. Remove tiller and all other parts from the shipping carton. Avoid unnecessary lifting; cut shipping carton open and **roll** tiller out of carton.

2. Attach the handle to the handle brackets, Fig. 1. Position handle over brackets and secure using four (4): ⅜-16 x 1" acorn hd. bolts*, ⅜ lock washers* and ⅜-16 hex nut*. **Be sure handle is pushed all the way up before tightening the bolts.**

3. Attach the throttle control to the back side of handle, Fig. 2. (**NOTE:** Route cable through opening **above** cross brace, Fig. 1.)

   Slide the threaded part of control into slot on the back of handle, Fig. 2. Slide the ⅜ lock washer and ⅜-24 hex nut up the control cable and secure control to handle by tightening the hex nut to the control from underside of the slot. **NOTE:** Lock washer and nut (Fig. 2) are placed on cable at factory.

4. Turn the control knob* onto the clutch control lever, Fig. 3.

*** This item can be found in the hardware bag.**

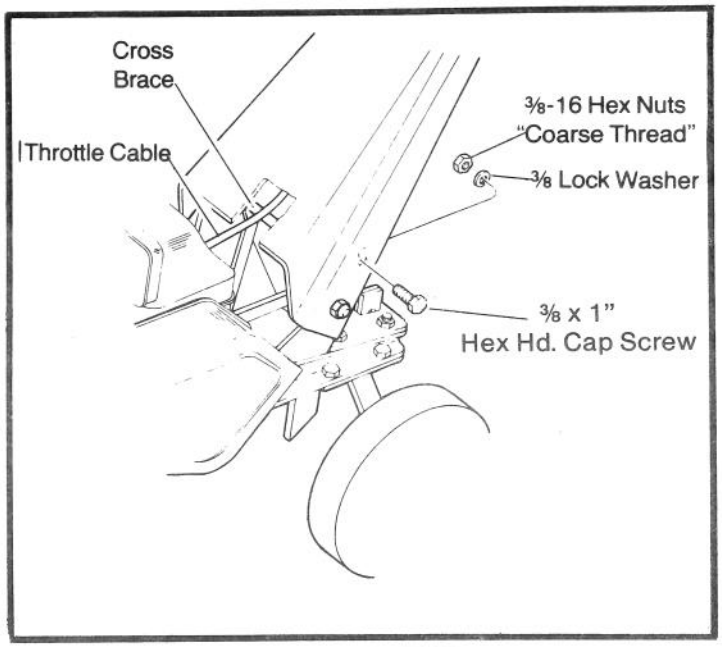


**FIGURE 1**

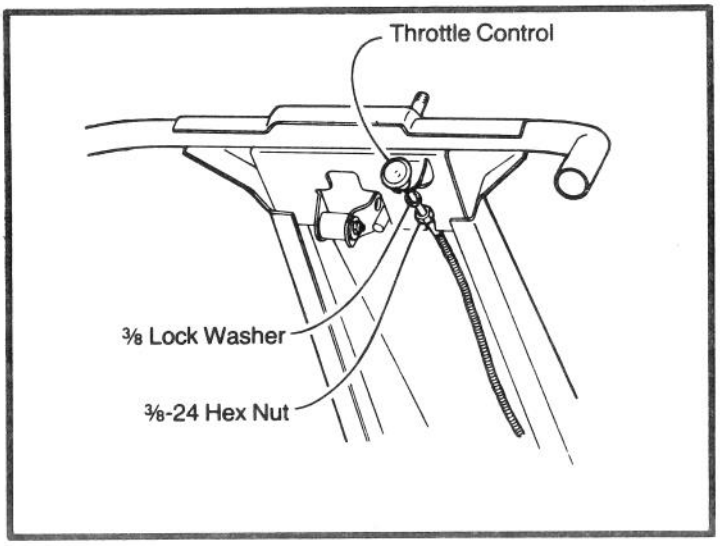


**FIGURE 2**

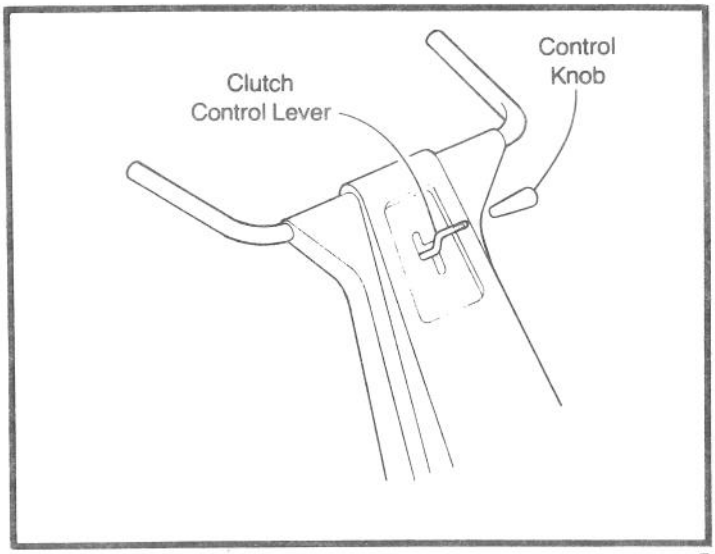


**FIGURE 3**

# SET-UP INSTRUCTIONS

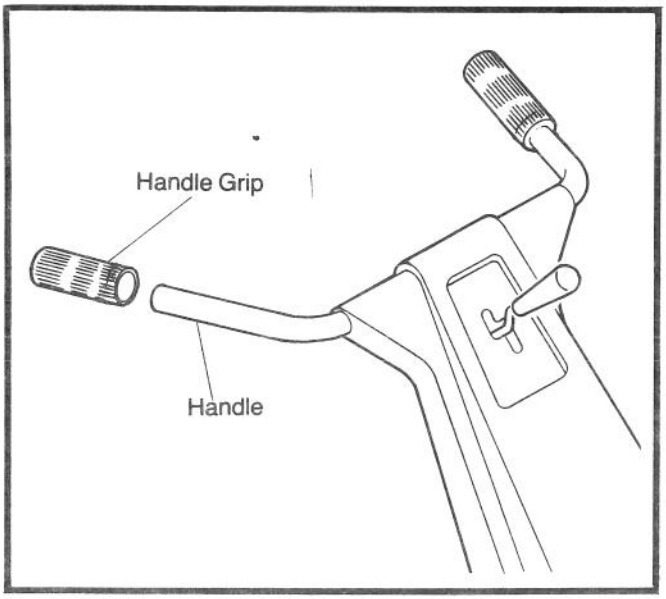


FIGURE 4

5. Dip Grips into cold water and slide onto handle bars.

6. Reposition the outer tine hub assemblies, to the proper end of tine shaft, Fig. 5. **NOTE:** For shipping purposes, this tiller was shipped with the outer tine hub assemblies on the opposite ends of the shaft.

   Slide each outer tine hub assembly from tine shaft and install onto the opposite end of tine shaft. Be sure the tilling edges (tapered edges) are facing the same forward direction as the inner tine hub assemblies.

   When the hole in the hub assembly lines up with hole in the tine shaft, insert a 3/8-24 x 1¾ hex hd. heat treated cap screw* and secure with a 3/8 lock washer* and 3/8-24 hex nut* ("fine thread").

   **Assemble the other outer tine hub assembly following the same instructions as outlined above.**

7. Attach control rod to the tiller.

   The swivel stud is attached to the idler arm located behind the belt guard next to the 2 large pulleys, Fig. 6.

   Insert the threaded end of the control rod through hole in swivel stud and secure in place with the 5/16-18 hex nut*.

   Insert the hooked end of control rod through the hole provided in the control lever assembly on the backside of handle, Fig. 7. Secure in place with a 3/32 x ¾ cotter pin*.

   **IMPORTANT:** Check "Clutch Control Adjustment" of tiller following instructions in ADJUSTMENT AND SERVICING section, page 9.

*** This item can be found in the hardware bag.**

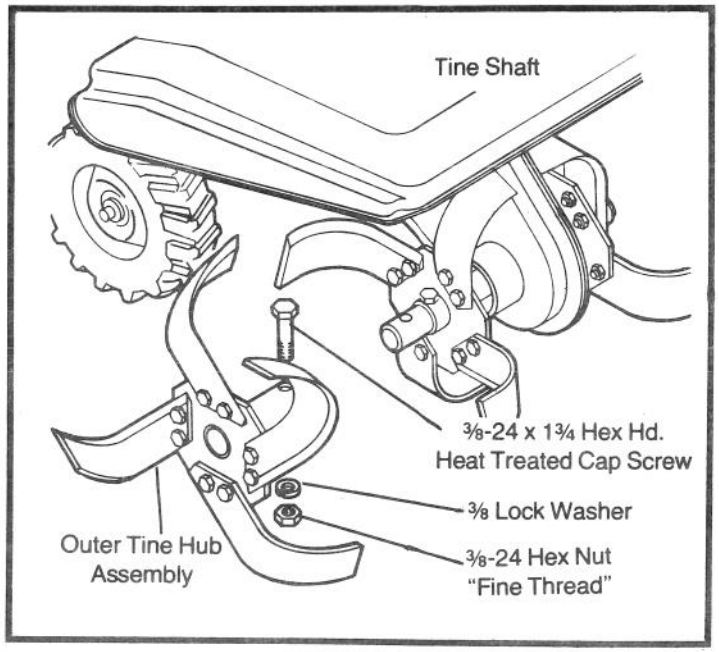


FIGURE 5

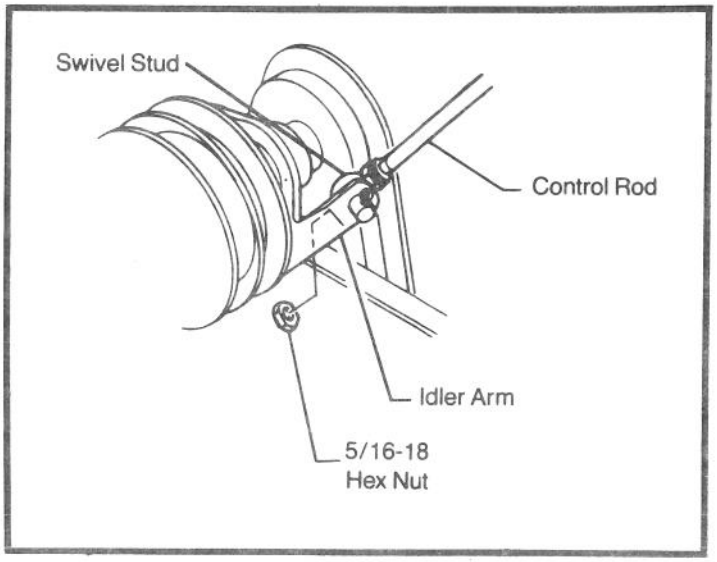


FIGURE 6

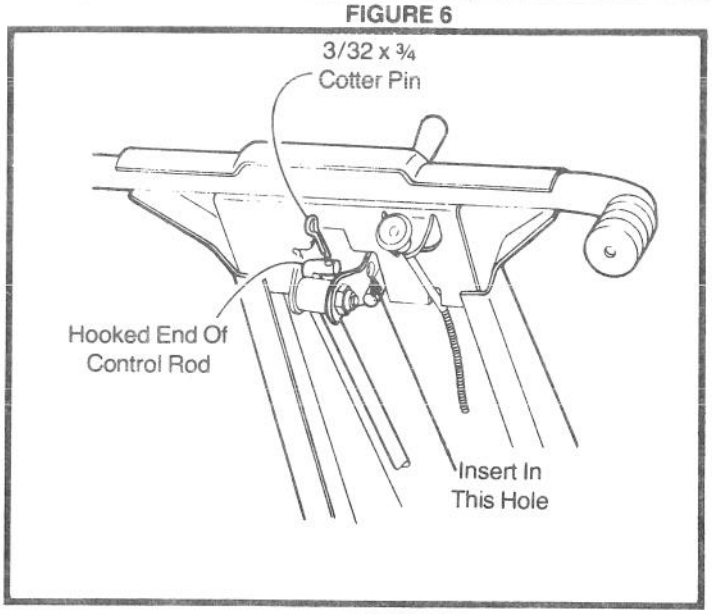


FIGURE 7

A2490

# BEFORE OPERATING

1. **IMPORTANT: FILL CRANKCASE WITH OIL**

   The engine does not have oil in the crankcase when it is shipped from the factory. If engine is started before oil is added to the crankcase, engine damage could result. Refer to the engine section of this operator's manual for the quantity and type of oil needed.

2. Fill fuel tank with a clean, fresh, leaded or low-lead "regular" grade of automotive gasoline. Do not use lead-free gasoline or "gasohol". Fill tank completely. **Do not mix oil with gasoline.**

3. Although your tiller was lubricated at the factory, do it again during initial servicing to become familiar with points requiring regular service. Be certain to check oil in chain case. See LUBRICATION instructions.

4. All bolts and nuts should be checked and tightened during the first two (2) hours of use. Periodic checks should be made thereafter.

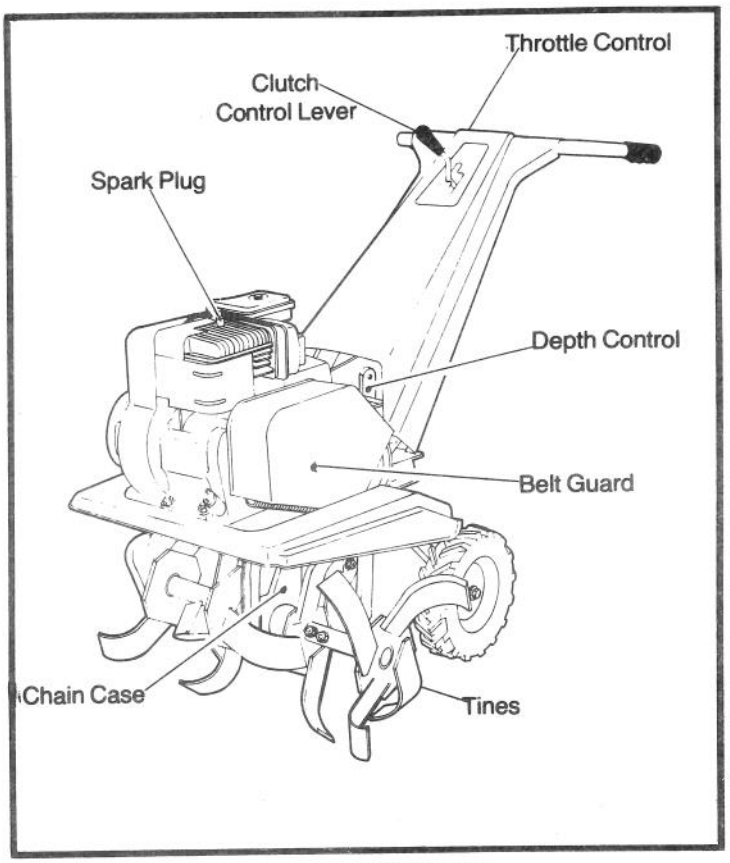


FIGURE 8

## CONTROLS

### CLUTCH CONTROL LEVER

The clutch control lever engages forward and reverse drive to the tines and also disengages the drive to the tines. The clutch control lever is located in the center of the handle bar (Fig. 8). To engage forward drive to the tines, move lever to the left and allow it to go forward into bottom of slot. To engage reverse, pull lever back. Lever will not lock in reverse. You must pull lever whenever you want to go in reverse. Neutral is located in the center notch of the slot.

**Before starting engine be certain clutch control lever is in neutral position.**

### THROTTLE CONTROL

This control regulates the engine speed from idle to fast and also stops the engine. It is located on the right side of the handle panel (Fig. 8). To idle engine push throttle control in. To increase speed pull throttle control out. To stop engine push throttle control all the way in.

### DEPTH CONTROL

The depth control determines the depth and speed (acting as a brake) at which the tiller will operate. It is located in the rear of the tiller frame, Fig. 8 and 9.

By lowering the setting of the depth control, the forward speed of the tiller is reduced and the working depth of the tines is increased. Raising the setting of the depth control increases the forward speed and reduces the working depth. Refer to Fig. 9 for an explanation of the different hole settings in the depth control.

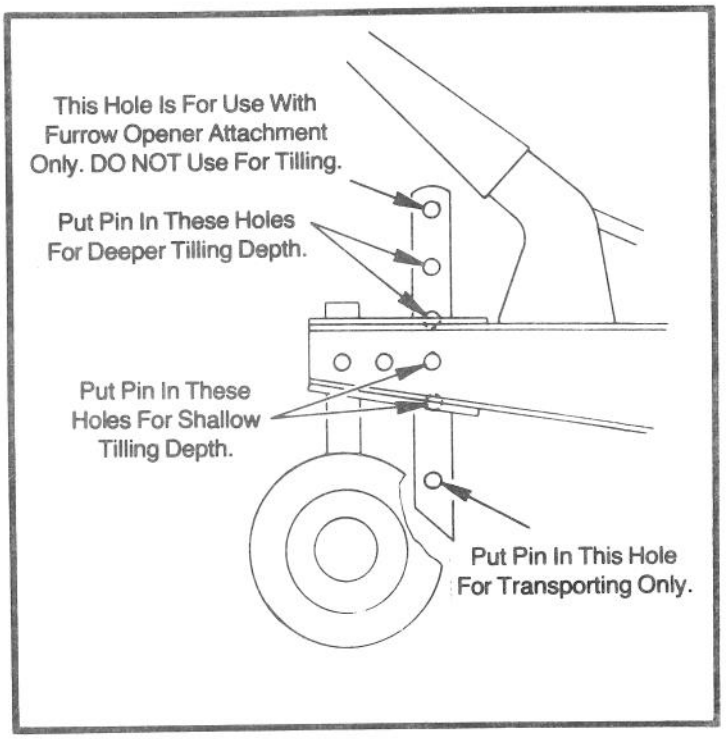


FIGURE 9

# OPERATING INSTRUCTIONS

### OPERATING SUGGESTIONS

This tiller will provide excellent rotary tilling for seed bed preparation, mulching or similar chores. Planting of rows in standard widths (36") will enable you to use your tiller for cultivating the soil between the rows. See VERSATILE TINE COMBINATIONS.

### OPERATING TIPS

The forward and penetrating action of the rotary tiller is obtained from the rotating action of the tines in the soil. Do not fight the tiller. Permit the tiller to do the work it was made to do.

NOTE: Turning the tiller is made easier by lifting the handle up slightly. This reduces drag from the depth control (Fig. 8).

When soil conditions are severe and several passes must be made over a certain area, the depth control setting should be lowered each time a pass is made. Further control of the tilling depth and travel speed can be obtained by variation of pressure on the handle. A downward pressure on the handle will increase the working depth and reduce the forward speed. An upward pressure on the handle will reduce the working depth and increase the forward speed. The type of soil and working conditions will determine the actual setting of the depth control and the handle pressure required. A few minutes use will quickly tell what the best setting is for your particular soil conditions.

## STARTING AND STOPPING INSTRUCTIONS

Now that you have located the controls and understand their operation and function, it is time to start your tiller. Remember, improper use of the tiller could result in injury. Give complete and undivided attention to what you are doing. Know how to stop engine quickly.

**Before starting engine, be certain the clutch control lever is in neutral.**

1. Refer to the engine STARTING instructions in the engine section.
2. Move tiller to suitable ground.
3. Choke the engine (pull throttle control all the way out). See instructions in the engine section. Do not choke the engine if you are starting a warm engine.
4. Start engine by pulling starter rope.
5. Shift into forward, neutral and reverse to be certain all three positions operate properly. STOP ENGINE.

If tiller moves in the neutral position, adjust clutch control rod following the instructions on page 9.

**To Stop Engine:**

1. Move the clutch control lever to the neutral position.
2. Push throttle control all the way in.

## VERSATILE TINE COMBINATIONS

Choose one of three (3) different tilling widths (12", 20" or 26") by interchanging the tines pointing in or by removing the outer tine hub assemblies altogether, Fig. 10.

The **12" tilling width** is achieved by simply removing the two (2) outer tine hub assemblies.

The **20" tilling width** is achieved by removing two (2) tines (those that point out) from each outer tine hub assembly and transfer these tines, installing them on the opposite side of the tiller. The transferred tines should be pointing toward the chain case with the tilling edges (tapered edges) facing the same forward direction as the inner tine hub assemblies. **Match symbols, as shown in Fig. 10, for easy changeover.**

The **26" tilling width** is the width of tines that your tiller is set at after initial assembly of the tiller.

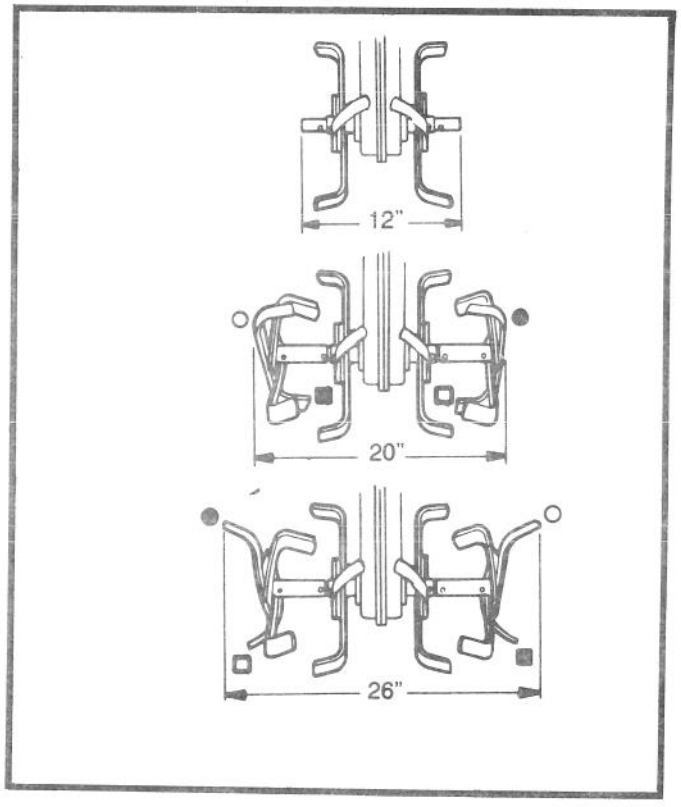


FIGURE 10

A2492

# MAINTENANCE

## ADJUSTMENT AND SERVICING

**Never attempt to make adjustments on the tiller while it is in operation or while the engine is running. Always turn engine off before attempting to make any adjustment.**

### CLUTCH CONTROL ADJUSTMENT

Although the control rod has been adjusted at the factory, it may require some adjustment, Fig. 11.

**Push throttle control all the way in and disconnect spark plug wire to prevent accidental starting.**

**To check adjustment:** Place the clutch control lever in the neutral position. Turn the engine over slowly (by pulling starter rope) to be sure the belts slip on all pulleys.

If tiller moves forward in the neutral position, loosen the jam nut and top hex nut. Move the bottom hex nut up slightly and retighten top hex nut and jam nut. If tiller moves backward in the neutral position move the bottom hex nut down slightly and retighten top hex nut and jam nut, Fig. 11.

After satisfactory adjustment has been obtained, reconnect the spark plug wire.

### WHEEL HANGER ADJUSTMENT

To provide a comfortable handle bar height at various tilling depths, the wheel hanger can be adjusted to one of three (3) positions, Fig. 12.

To Adjust:

1. Remove spring clip and clevis pin.
2. Move wheel hanger to either hole position to raise or lower handle to position most comfortable to you.
3. Insert clevis pin and secure with spring clip.

### ADJUSTMENT FOR BELT STRETCH

To compensate for belt stretch loosen bolts that secure engine to frame and slide engine forward in slots. After adjustment is made tighten bolts securely.

### BELT REPLACEMENT

If all the adjustment has been used up, or the belts become excessively worn or break, replacement is required. Order belts from your TORO dealer. Any other belts will not provide the life or service of the specified belts.

**To replace the forward drive belt:**

1. Remove the belt guard.
2. Unhook the front end of spring from engine mounting bracket, Fig. 13.
3. Remove the forward drive belt from pulleys.
4. Place belt around engine pulley and input pulley.
5. Replace the idler spring.
6. Be sure belt is between belt guides and on top of forward idler.
7. Replace the belt guard.

**To replace the reverse drive belt:**

1. Remove the belt guard.
2. Unhook the front end of spring from engine mounting bracket, Fig. 13.
3. Remove the forward drive belt.
4. Remove the reverse drive belt from pulleys.
5. Place belt around cam shaft pulley on engine and around input pulley.
6. Be sure belt is between belt guides and under reverse idler, Fig. 13.
7. Replace forward drive belt.
8. Replace the idler spring.
9. Replace the belt guard.

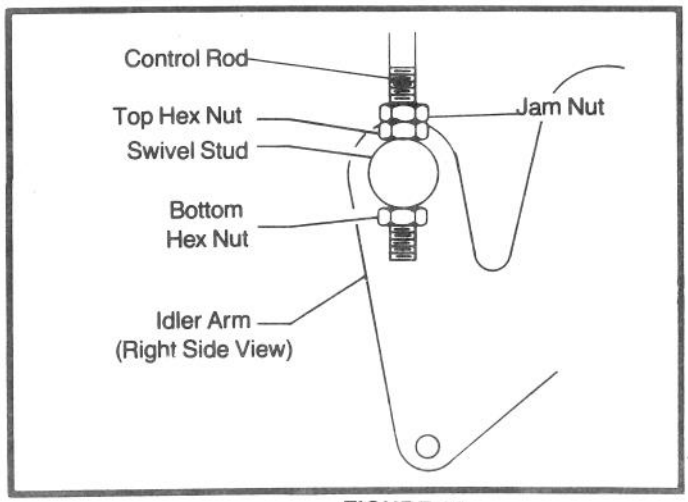


FIGURE 11

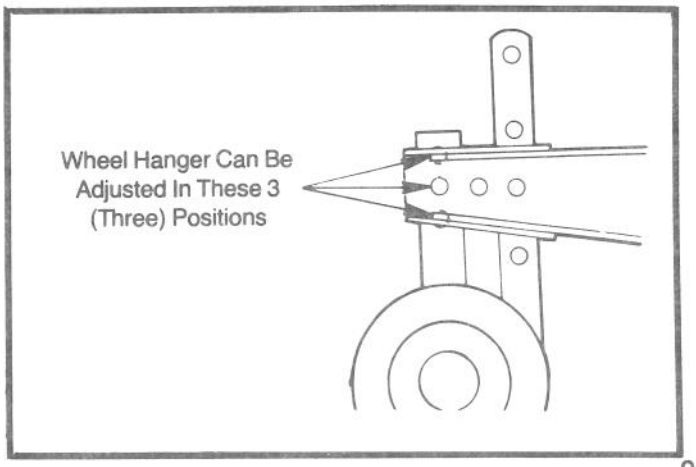


FIGURE 12

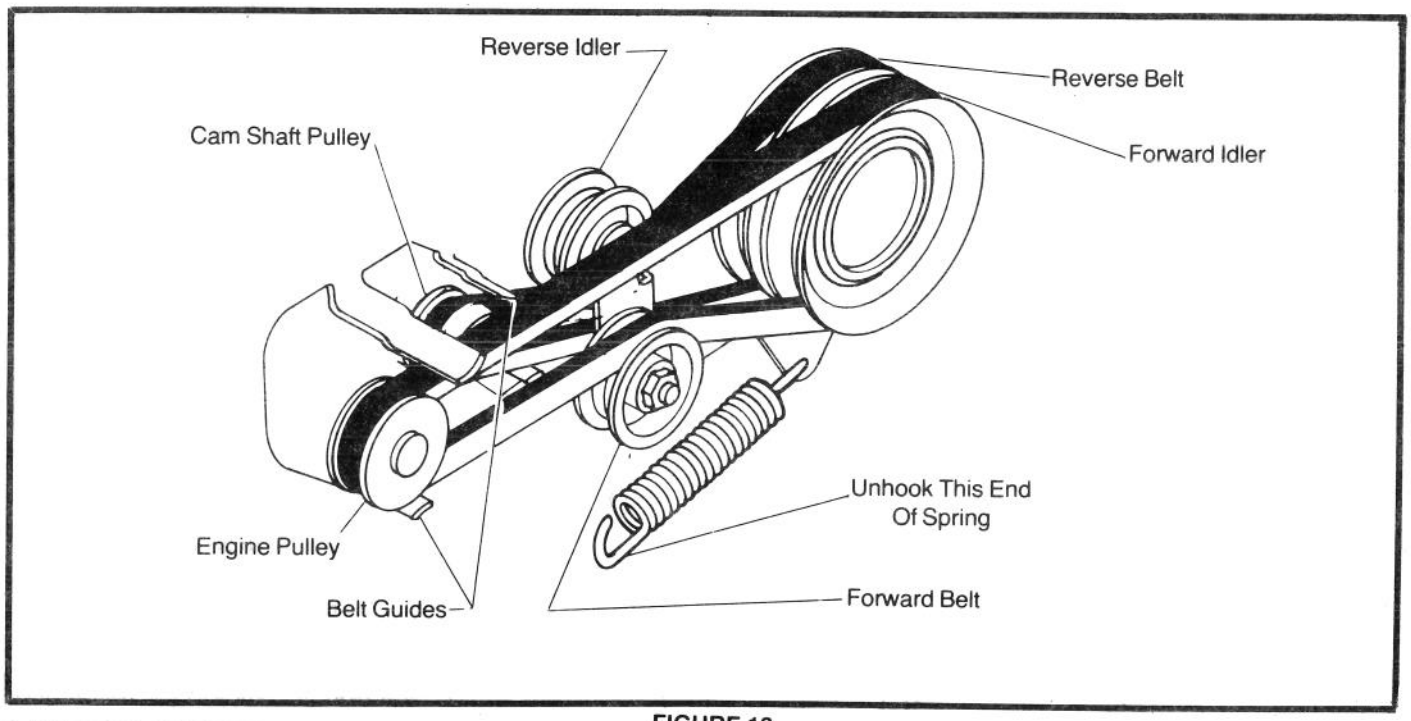


FIGURE 13

## LUBRICATION

1. **Engine** - The engine must be in a level position to check the oil level in the engine crankcase. Check every 5 hours of operation. Add oil as necessary to keep level full to point of overflowing. Before removing the oil fill plug, clean area around plug to prevent dirt from entering oil fill hole. **NOTE:** Refer to the engine operating instructions for all maintenance and lubrication instructions and requirements.

2. **Chain Case** - To check the oil level of the tiller chain case, the tiller must be on a level surface. To check oil level, wipe dirt from around the Oil Level Check and Fill Plug (shown in Fig. 14), then remove plug. Oil should be level with the bottom of the plug hole. If it isn't, add lead base (EP) S.A.E. 140 heavy-duty oil (Part #4890) to bring oil up to the proper level. Replace plug after oil begins to run out of the plug hole. Check oil level after every 25 operating hours, or if unit shows signs of leakage.

3. **Wheels** - Lubricate the wheels periodically using SAE #30 wt. oil.

## STORAGE

For short term storage clean off the tiller and store in a dry place.

If tiller is not to be used for an extended period of time it should be serviced and stored in a dry place.

1. Refer to the engine section for engine storage instructions.

2. Drain gasoline from fuel tank.

3. Run engine until it stops.

4. Cover exposed metal surfaces with a thin coat of SAE #30 wt. oil.

5. Lubricate per instructions under LUBRICATION AND MAINTENANCE.

6. Before using the tiller again, check all lubrication points, fill fuel tank and review the safety and operating instructions in this Operator's Manual.

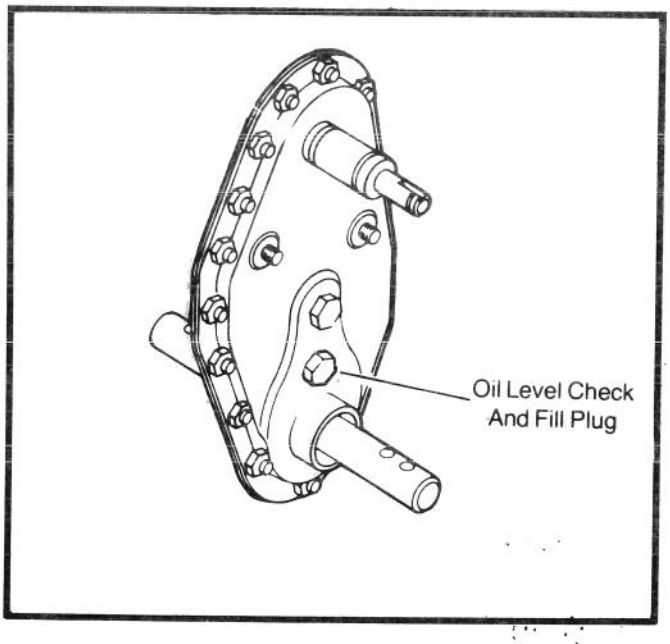


FIGURE 14

A2494

# ENGINE OPERATING AND MAINTENANCE INSTRUCTIONS

## BEFORE STARTING

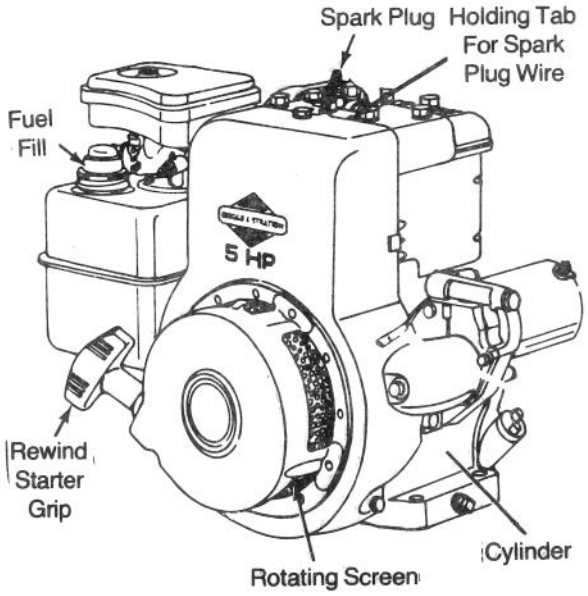


Use a high quality detergent oil classified "For Service SF, SE, SD or SC." Detergent oils keep the engine cleaner and retard the formation of gum and varnish deposits. Nothing should be added to the recommended oil.

**RECOMMENDED SAE VISCOSITY GRADES**

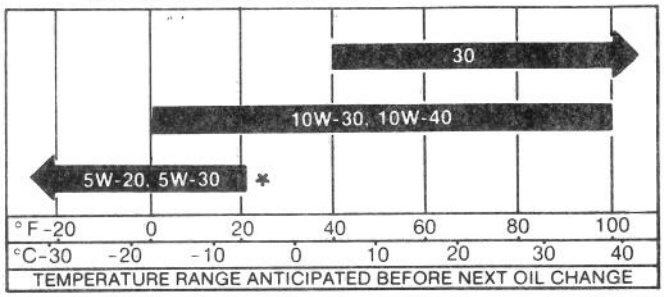


* If not available, a synthetic oil may be used having 5W-20, 5W-30 or 5W-40 viscosity.

**TO FILL CRANKCASE WITH OIL**

Place engine level. Clean area around oil fill before removing oil fill plug.

**OIL FILL PLUG** Remove oil fill plug. Fill crankcase to point of overflowing. POUR SLOWLY. Capacity approximately 1¼ pints (0.59 liters). Replace oil fill plug.

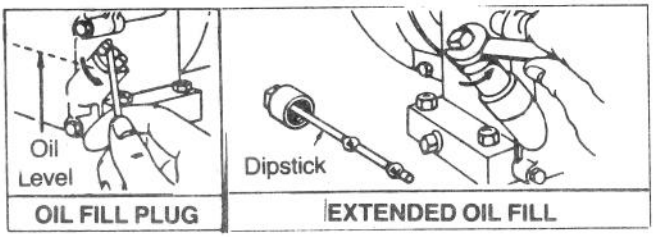


**EXTENDED OIL FILL** (Optional) Remove cap and dipstick. **Fill to full mark** on dipstick. POUR SLOWLY. Capacity approximately 1¼ pints (0.59 liters). When checking oil level, screw dipstick assembly firmly but slowly until cap bottoms on tube. **DO NOT OVERFILL.** Dipstick assembly must be securely assembled to tube at all times when engine is operating.

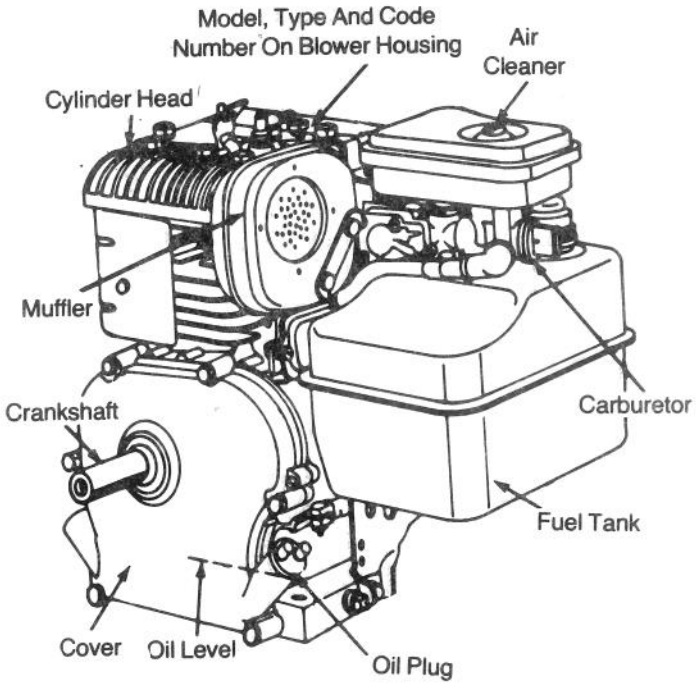


**FILL FUEL TANK**

Use clean, fresh, "regulargrade leaded, low-lead or lead-free" gasoline. DO NOT MIX OIL WITH GASOLINE.

**NOTE:** The use of "lead-free" gasoline produces fewer combustion deposits, but may shorten valve life if carburetor adjustment is too lean.

A2495

# ENGINE OPERATING AND MAINTENANCE INSTRUCTIONS

## STARTING

Start, store and fuel engine in a level position.

**CHOKE ENGINE -** Pull choke out as illustrated.

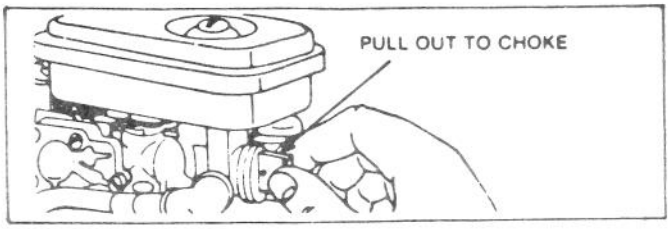


**CAUTION:** DO NOT operate engine with lever in partial choke position. Excessive speeds may occur if engine is run (after warm up) with choke partially closed.

**NOTE:** A warm engine requires less choking than a cold engine.

**NOTE:** Engine may not start if controls on powered equipment do not close choke fully. See ADJUSTMENT section.

**THROTTLE CONTROL:** Pull throttle control about half way out.

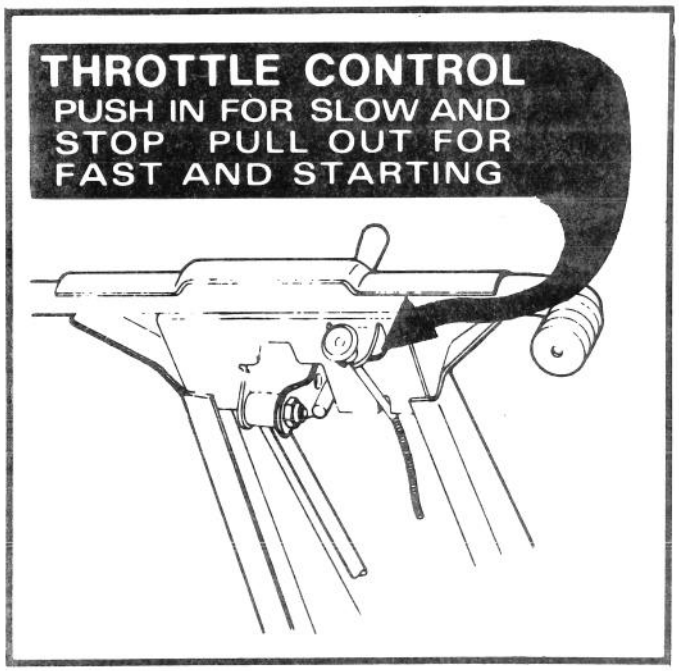


**TO START ENGINE**

**DANGER:** ALWAYS KEEP HANDS AND FEET CLEAR OF ROTATING MACHINERY.

**Rewind Starter.** Grasp starter handle as illustrated and pull out cord rapidly to overcome compression and prevent kickback. Repeat if necessary with choke opened slightly. When engine starts, open choke gradually.

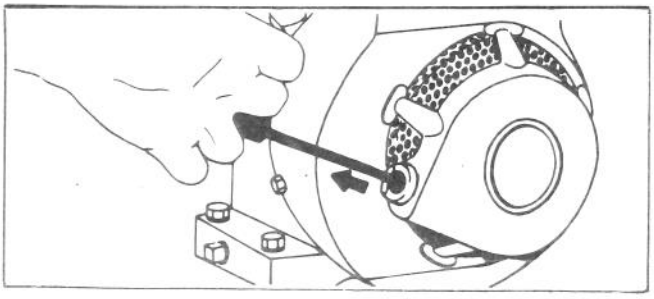

**TO STOP ENGINE**

Move throttle control lever to "STOP" position (push all the way in).

## MAINTENANCE

**WARNING:** TO PREVENT ACCIDENTAL STARTING when servicing the engine or equipment, always remove the spark plug or wire from the spark plug and insert in v-notch.

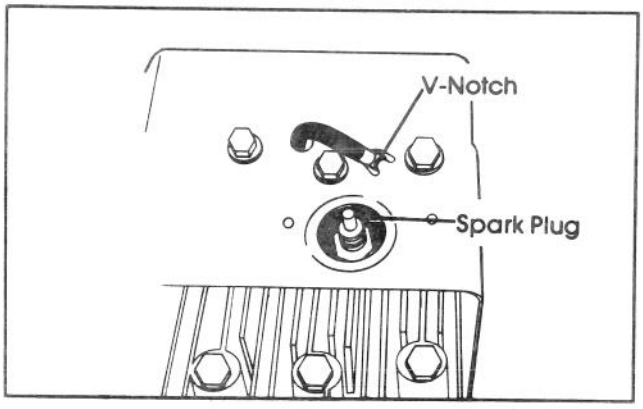


**CHECK OIL LEVEL** regularly - after each five hours of operation. BE SURE OIL LEVEL IS MAINTAINED.

**CHANGE OIL** after first five hours of operation. Thereafter change every 25 hours of operation. Drain oil while engine is **warm**, as follows:

1. Clean area around oil fill plug.
2. Tip and hold tiller about 45° forward. **HINT:** If necessary have someone hold tiller in this position while steps 3 and 4 are completed.
3. Place oil pan directly under opening; remove oil plug and allow oil to drain completely.
4. Lower tiller to level position and refill with new oil of proper grade (see oil chart in BEFORE STARTING section).
5. Wipe up any spilled or excess oil and replace oil fill plug.

A2496

# ENGINE OPERATING AND MAINTENANCE INSTRUCTIONS

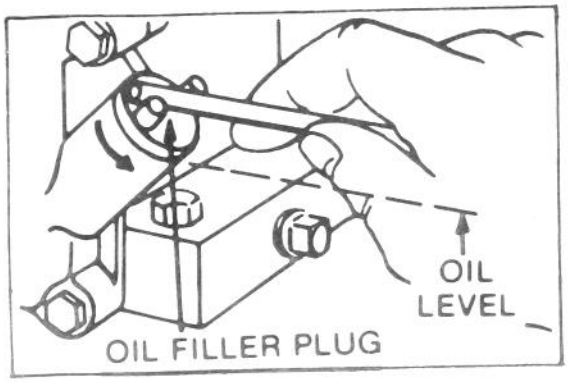


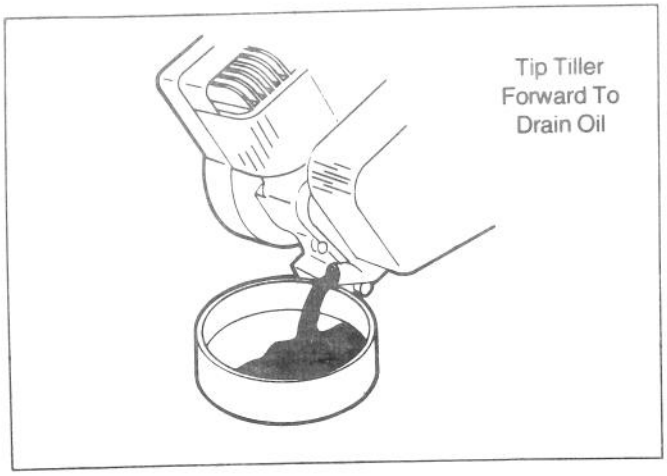


**TO SERVICE AIR CLEANER**
**"Oil Foam" Air Cleaner**

Clean and re-oil foam element at three month intervals or every 25 hours, whichever occurs first.

**NOTE:** Service air cleaner more often under dusty conditions.

1. Remove screw.
2. Remove air cleaner carefully to prevent dirt from entering carburetor.
3. Take air cleaner apart and clean.
   a. WASH foam element in kerosene or liquid detergent and water to remove dirt.
   b. Wrap foam in cloth and squeeze dry.
   c. **Saturate foam with engine oil.** Squeeze to remove excess oil.
4. Reassemble parts and fasten to carburetor securely with screw.

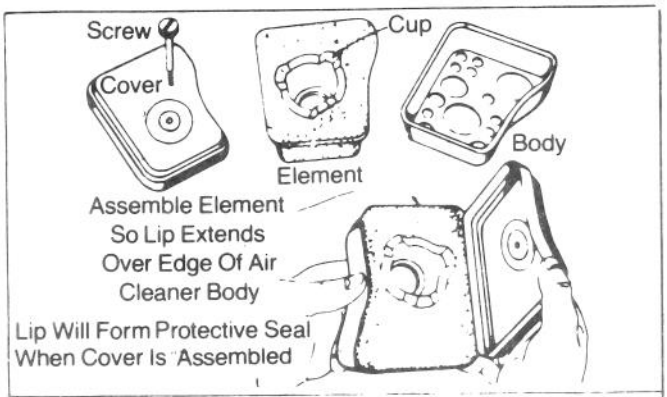


OIL FOAM AIR CLEANER

**CLEAN COOLING SYSTEM** - Grass, chaff or dirt may clog the rotating screen and the air cooling system, especially after prolonged service. Yearly or every 100 hours, whichever occurs first, remove the blower housing and clean the areas shown to avoid overspeeding, overheating and engine damage. Clean more often if necessary.

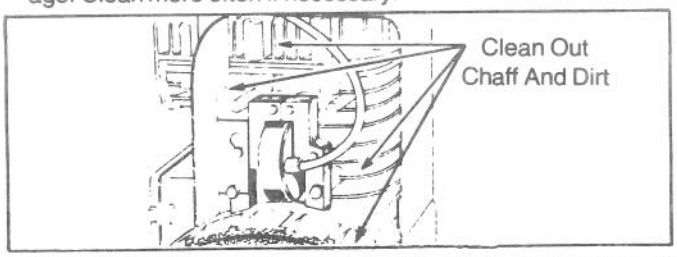


**DANGER:** Periodically clean muffler area to remove all grass, dirt and combustible debris.

**SPARK PLUG** - Clean and reset gap at .030" every 100 hours of operation.

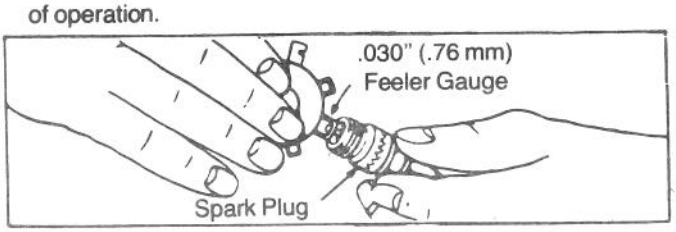


**CAUTION:** Do not blast clean spark plug. Spark plug should be cleaned by scraping or wire brushing and washing with a commercial solvent.

Sparking can occur if wire terminal does not fit firmly on spark plug, or if stop switch vibrates against spark plug. Reform terminal or repair switch if necessary.

**REMOVE COMBUSTION DEPOSITS** every 100-300 hours of operation. Remove cylinder head and cylinder head shield. Scrape and wire brush the combustion deposits from cylinder, cylinder head, top of piston and around valves. Use a soft brush to remove deposits. Re-assemble gasket, cylinder head and cylinder head shield. Turn screws down finger tight with the three longer screws around the exhaust valve, if so equipped. Torque cylinder head screws in a staggered sequence to 140 inch pounds (15.82 Nm).

**SPARK ARRESTER EQUIPPED MUFFLER** - If engine muffler is equipped with spark arrester screen assembly, remove every 50 hours for cleaning and inspection. Replace if damaged.

**CLEAN ENGINE** - Remove dirt and debris with a cloth or brush. Cleaning with a forceful spray of water is not recommended as water could contaminate the fuel system.

# ENGINE OPERATING AND MAINTENANCE INSTRUCTIONS

## ADJUSTMENTS

### CARBURETOR ADJUSTMENTS

Minor carburetor adjustment may be required to compensate for differences in fuel, temperature, altitude or load.

**NOTE:** The air cleaner must be assembled to carburetor when running engine.

**TO ADJUST CARBURETOR** — Gently turn needle valve clockwise until it **just** closes. Valve may be damaged by turning it in too far.

Next, open the needle valve 1½ turns counterclockwise. This initial adjustment will permit the engine to be started and warmed up (approximately 5 minutes) prior to final adjustment.

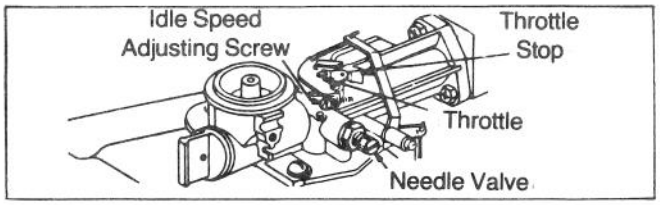


### FINAL ADJUSTMENT

Place speed control lever in "FAST" position. Turn needle valve in until engine slows (clockwise - lean mixture). Then turn it out past smooth operating point until engine runs unevenly (rich mixture). Now turn needle valve to the midpoint between rich and lean so the engine runs smoothly. Next, adjust idle RPM. Rotate throttle counterclockwise and hold against stop. Adjust idle speed adjusting screw to obtain 1750 RPM. Release throttle - engine should accelerate without hesitation or sputtering. If engine does not accelerate properly, the carburetor should be re-adjusted, usually to a slightly richer mixture.

### CONTROL ADJUSTMENTS

Proper choke and speed control operation is dependent upon proper adjustment of speed controls on the powered equipment.

#### SPEED CONTROL ADJUSTMENT

The acceptable operating speed range is 1800 to 3600 RPM. Idle speed is 1750 RPM. DO NOT EXCEED 3600 RPM.

#### SPEED CONTROL

Controls on powered equipment should move governor speed control lever in direction illustrated to increase speed. Casing from speed controls may be connected to engine at points indicated. Wire travel is shown by arrows.

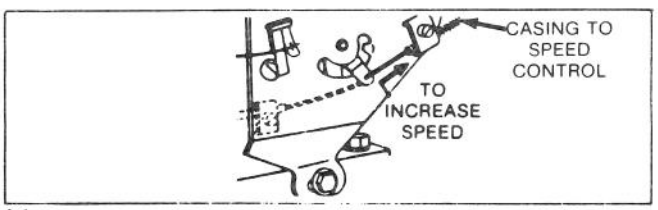


## GENERAL INFORMATION

These engines are single-cylinder L-head, air-cooled type.

**MODEL SERIES 130200 to 131299**

Bore ..... 2-9/16" (65.09 mm)
Stroke ..... 2-7/16" (61.91 mm)
Displacement ..... 12.57 cu. in. (206.0 cc)
Horsepower ..... 5.0 Max. @ 3600 RPM
Torque (Ft. Lbs.) ..... 7.66 Max. @ 3000 RPM

The horsepower ratings listed are established in accordance with the Society of Automotive Engineers Test Code - J607. For practical operation, the horsepower should not exceed 85% of this rating. Engine power will decrease 3½% for each 1,000 feet (304.8 m) above sea level and 1% for each 10° above 60° F (16° C).

In some areas, local law requires the use of a resistor spark plug so as to suppress ignition signals. If an engine was originally equipped with a resistor spark plug, be sure to use the same type of spark plug for replacement.

### TUNE-UP SPECIFICATIONS

| Spark Plug Type | Champion | Autolite | Robert Bosch |
|---|---|---|---|
| Short Plug | CJ-8 | 235 | WS9E |
| Long Plug | J-8 | 295 | -- |
| Resistor Short Plug | RCJ-8 | 245 | WSR9E |
| Resistor Long Plug | RJ-8 | 306 | -- |

Spark Plug Gap ..... .030" (.76 mm)
Ignition Point Gap
(Model 130200 Series Only) ..... .020" (.51 mm)
Intake Valve Clearance ..... .005" - .007" (.13 - .18 mm)
Exhaust Valve Clearance ..... .009" - .011" (.23 - .28 mm)

### STORAGE INSTRUCTIONS

Engines to be stored over 30 days should be completely drained of fuel to prevent gum deposits forming on essential carburetor parts, fuel filter and tank.

**NOTE:** The use of a fuel additive, such as STA-BIL, or an equivalent, will minimize the formation of fuel gum deposits during storage. Such an additive may be added to the gasoline in the fuel tank of the engine, or to the gasoline in a storage container.

a. All fuel should be removed from the tank. Run the engine until it stops from lack of fuel. The small amount of fuel that remains in the sump of the tank should be removed by absorbing it with a clean, dry cloth.

b. While engine is still warm, drain oil from crankcase. Refill with fresh oil.

c. Remove spark plug, pour approximately ½ ounce (15 cc) of engine oil into cylinder and crank slowly to distribute oil. Replace spark plug.

d. Clean dirt and chaff from cylinder, cylinder head fins, blower housing, rotating screen and muffler areas.

e. Store in a clean and dry area.

A2498

# TROUBLE SHOOTING

| Problem | Possible Causes | Corrective Action |
|---|---|---|
| Engine does not start. | 1. Gas tank is empty. | 1. Fill fuel tank with gasoline: Refer to Fill Fuel Tank, page 11. |
| | 2. Choke not in FULL position. | 2. Move choke to FULL CHOKE position: Refer to Starting and Stopping Instructions, page 12. |
| | 3. Spark plug loose. | 3. Tighten spark plug to 15 ft.-lb. (20.4 Nm) |
| | 4. High tension wire loose or disconnected from spark plug. | 4. Install high tension wire on spark plug. |
| | 5. Spark plug gap is incorrect. | 5. Set gap between electrodes at 0.030 of an inch (0.76 mm). |
| | 6. Spark plug is defective. | 6. Install new, correctly gapped plug: Refer to Tune-Up Specifications, page 14. |
| | 7. Faulty points or condenser. | 7. Contact Authorized TORO Service Dealer. |
| Engine starts hard or loses power. | 1. Dirt, water, or stale fuel in gas tank. | 1. Drain gas and clean fuel tank. Fill tank with clean, fresh gasoline: Refer to Fill Fuel Tank, page 11. |
| | 2. Vent hole in fuel tank cap is plugged. | 2. Clean or replace fuel tank cap. |
| | 3. Air cleaner is dirty. | 3. Clean the air cleaner element: Refer to To Service Air Cleaner, page 13. |
| Engine operates erratically. | 1. Spark plug is defective. | 1. Install new, correctly gapped plug: Refer to Tune-Up Specifications, page 14. |
| | 2. Spark plug is gapped incorrectly. | 2. Set gap between electrodes at 0.030 of an inch (0.76 mm). |
| | 3. Air cleaner is dirty. | 3. Clean the air cleaner element: Refer to To Service Air Cleaner, page 13. |

A2499

# TROUBLE SHOOTING

| Problem | Possible Causes | Corrective Action |
|---|---|---|
| Engine idles poorly. | 1. Air cleaner is dirty. | 1. Clean the air cleaner element: Refer to To Service Air Cleaner, page 13. |
| | 2. Oil level in crankcase is low. | 2. Add oil to crankcase: Refer to Fill Crankcase With Oil, page 11. |
| | 3. Air slots in engine shroud are plugged. | 3. Remove obstruction from slots. |
| | 4. Cooling fins and air passages under engine blower housing are plugged. | 4. Remove obstruction from cooling fins and blower housing: Refer to Clean Cooling System, page 13. |
| | 5. Improper idle adjustment. | 5. Adjust carburetor properly, page 14. |
| Engine misfires at high speed. | 1. Air gap between electrodes of spark plug is too close. | 1. Set air gap at 0.030 of an inch (0.76 mm). |
| | 2. Carburetor adjusted incorrectly. | 2. Adjust carburetor: Refer to Carburetor Adjustments, page 14. |
| Engine overheats. | 1. Cooling air flow is restricted. | 1. Remove any obstruction from slots in shroud, blower housing, air passages and cooling fins on engine. |
| | 2. Oil level in crankcase is low. | 2. Add oil to crankcase: Refer to Fill Crankcase With Oil, page 11. |
| | 3. Incorrect spark plug. | 3. Install Champion RCJ8 spark plug that is gapped at 0.030 of an inch. |
| Tiller vibrates abnormally. | 1. Tine section is loose. | 1. Tighten tine bolts and nuts. |
| | 2. Engine mounting bolts are loose. | 2. Tighten engine mounting bolts. |
| | 3. Improper carburetor adjustment. | 3. Adjust carburetor properly, page 14. |
| | 4. Air cleaner plugged. | 4. Service air cleaner, page 13. |
| Tines do not rotate. | 1. Belt is broken. | 1. Contact Authorized TORO Service Dealer for replacement belt. |
| | 2. Clutch cable is adjusted incorrectly. | 2. Refer to Adjustment For Belt Stretch, page 9. |

A2500

# MAINTENANCE RECORD

| Date | Hours Used | Oil Change | Air Cleaner Service | Lubrication | Inspect Drive Belt | Winter Storage | Spring Service | Spark Plug |
|---|---|---|---|---|---|---|---|---|
| | | | | | | | | |
| | | | | | | | | |
| | | | | | | | | |

# MAINTENANCE RECORD

| Date | Hours Used | Oil Change | Air Cleaner Service | Lubrication | Inspect Drive Belt | Winter Storage | Spring Service | Spark Plug |
|---|---|---|---|---|---|---|---|---|
| | | | | | | | | |
| | | | | | | | | |
| | | | | | | | | |

# MAINTENANCE RECORD

| Date | Hours Used | Oil Change | Air Cleaner Service | Lubrication | Inspect Drive Belt | Winter Storage | Spring Service | Spark Plug |
|---|---|---|---|---|---|---|---|---|
| | | | | | | | | |
| | | | | | | | | |
| | | | | | | | | |
| | | | | | | | | |
| | | | | | | | | |
| | | | | | | | | |
| | | | | | | | | |
| | | | | | | | | |
| | | | | | | | | |
| | | | | | | | | |
| | | | | | | | | |
| | | | | | | | | |
| | | | | | | | | |
| | | | | | | | | |
| | | | | | | | | |
| | | | | | | | | |
| | | | | | | | | |
| | | | | | | | | |
| | | | | | | | | |
| | | | | | | | | |
| | | | | | | | | |
| | | | | | | | | |
| | | | | | | | | |
| | | | | | | | | |
| | | | | | | | | |
| | | | | | | | | |
| | | | | | | | | |
| | | | | | | | | |
| | | | | | | | | |
| | | | | | | | | |
| | | | | | | | | |

A2441

# IDENTIFICATION AND ORDERING

## MODEL AND SERIAL NUMBERS

The tiller has two identification numbers: a model number and a serial number. The two numbers are stamped on a decal which is on the right side of the frame below the handle support bracket.

Record the model and serial numbers below and keep this manual in a safe place for future reference.

Model No. _____
Serial No. _____

In any correspondence the tiller, supply the model and serial numbers to assure that correct information and replacement parts are obtained.

To order replacement parts from an Authorized TORO Service Dealer, supply the following information:

1. Model and serial number of the tiller.
2. Part number, description, and quantity of part(s) desired.

**NOTE:** Do not order by reference number if a parts catalog is being used; use the PART NUMBER.

## The Toro Promise

***A Two Year Limited Warranty***
*On All*
*Gasoline Powered Consumer Products*

*The Toro Company promises to repair these TORO Products if defective in materials or workmanship. The following time periods from the date of purchase apply:*

| | |
|---|---|
| Residential Product . . . . . | 2 Years |
| Residential Products Used Commercially . . . | 45 Days |

*The costs of parts and labor are included, but the customer pays the transportation costs. Just return any residential product to an Authorized TORO Service Dealer or TORO Distributor.*

Should you feel your TORO is defective and wish to rely on The Toro Promise, the following procedure is recommended:

1. Contact any Authorized TORO Service Dealer, TORO Master Service Dealer, or TORO Distributor (the Yellow Pages of your telephone directory is a good reference source).
2. He will either instruct you to return the product to him or recommend another Authorized TORO Service outlet which might be more convenient.
3. Bring the product along with your original sales slip, or other evidence of purchase date, to the service dealer.
4. The servicing dealer will inspect the unit, advise you whether the product is defective and, if so, make all repairs necessary to correct the defect without extra charge to you.

If for any reason you are dissatisfied with the dealer's analysis of the defect or the service performed, you may contact us.

Write:
TORO Customer Service Department
8111 Lyndale Avenue South
Minneapolis, Minnesota 55420

The above remedy of product defects through repair by an Authorized TORO Service Dealer is the purchaser's sole remedy for any defect.

THERE IS NO OTHER EXPRESS WARRANTY. ALL IMPLIED WARRANTIES OF MERCHANTABILITY AND FITNESS FOR USE ARE LIMITED TO THE DURATION OF THE EXPRESS WARRANTY.

Some states do not allow limitations on how long implied warranty lasts, so the above limitation may not apply to you.

This Warranty applies only to parts or components which are defective and does not cover repairs necessary due to normal wear, misuse, accidents, or lack of proper maintenance. Regular, routine maintenance of the unit to keep it in proper operating condition is the responsibility of the owner.

All warranty repairs reimbursable under The Toro Promise must be performed by an Authorized TORO Service Dealer using Toro approved replacement parts.

Repairs or attempted repairs by anyone other than an Authorized TORO Service Account are not reimbursable under The Toro Promise. In addition, these unauthorized repair attempts may result in additional malfunctions, the correction of which is not covered by warranty.

**THE TORO COMPANY IS NOT LIABLE FOR INDIRECT, INCIDENTAL OR CONSEQUENTIAL DAMAGES IN CONNECTION WITH THE USE OF THE PRODUCT INCLUDING ANY COST OR EXPENSE OF PROVIDING SUBSTITUTE EQUIPMENT OR SERVICE DURING PERIODS OF MALFUNCTION OR NON-USE.**

Some states do not allow the exclusion of incidental or consequential damages, so the above exclusion may not apply to you.

This warranty gives you specific legal rights, and you may also have other rights which vary from state to state.