FORM NO. 3316–309 REV A

TORO®

MODEL NO. 30568–40001 & UP

PARTS CATALOG

52" REAR DISCHARGE CUTTING UNIT

(For Groundsmaster® 200 Series)

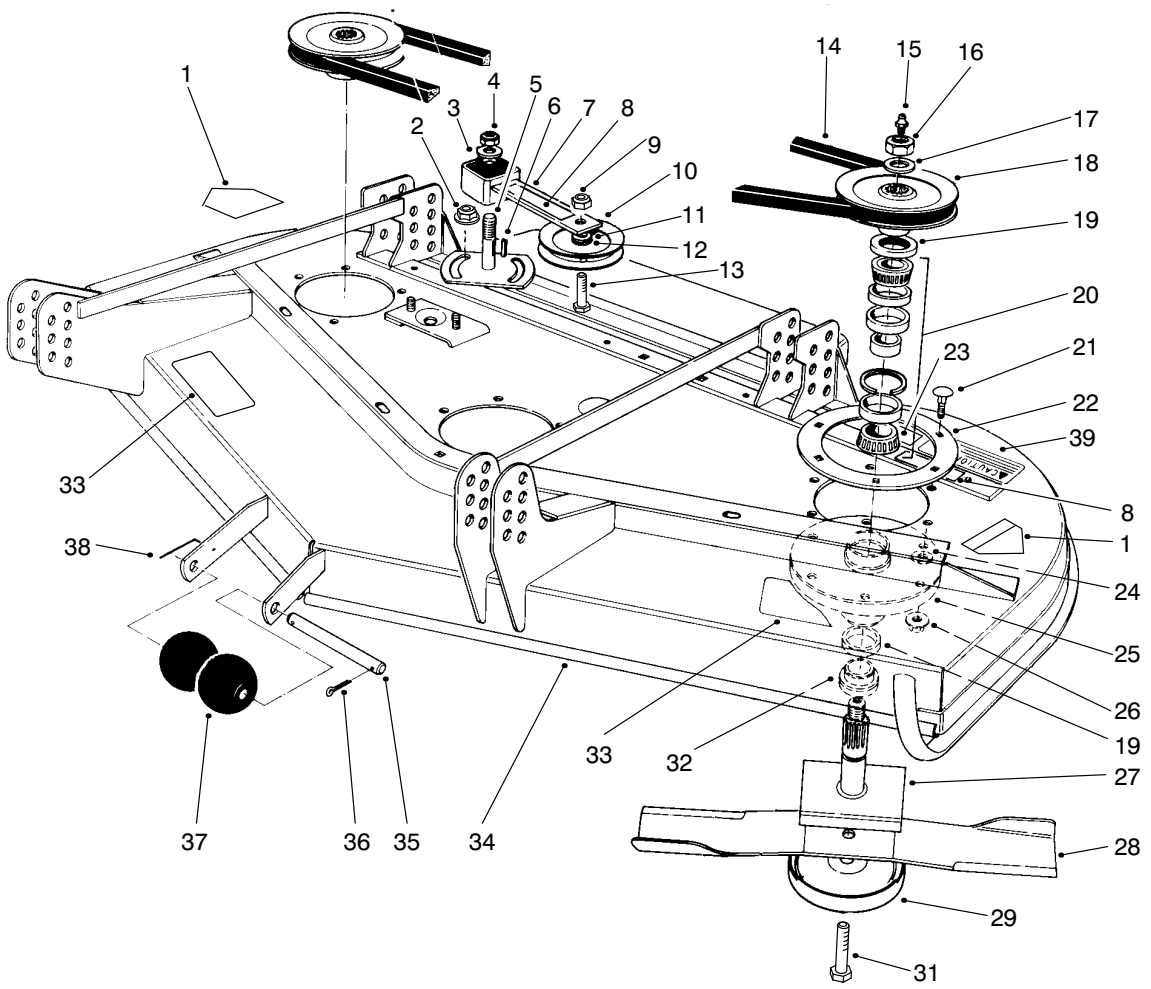

T–0577–2

DECK AND SPINDLE ASSEMBLY

Ref. No.	Part No.	Description	No. Used
1	43–8480	Decal – Danger	2
2	3296–357	Nut – Flange	2
3	3256–27	Washer – Flat	1
4	3296–33	Nut – Lock	1
5	28–9060	Plate – Idler	1
6	5–1077	Key – Square	1
7	27–8580	Idler Socket	1
8	67–5360	Decal – Shield Missing	2
9	3296–5	Nut – Lock	1
10	65–5940	Pulley – Idler	1
11	7–0081	Washer	1
12	65–5950	Bushing	1
13	3211–8	Screw – Cap Hex. Hd.	1
14	27–1160	V–Belt	1
15	302–2	Fitting – Grease	3
16	32146–20	Nut – Hex. Lock, Jam	3
17	7–4150	Washer	3

Ref. No.	Part No.	Description	No. Used
18	27–0970	Pulley	3
19	253–139	Seal – Wave	6
20	46–8530	Assembly – Bearing	3
21	3231–22	Bolt – Carriage	18
22	27–7680	Ring – Deck Support	2
23	68–8340	Decal – Blade Bolt Torque	1
24	3256–24	Washer – Flat	18
25	61–4160	Housing – Spindle	3
26	32128–21	Nut – Flange	18
27	27–0920	Spindle Shaft	3
28	27–0990	Blade	3
29	72–9360	Cup – Anti Scalp	3
31	92–5816	Screw – Blade	3
32	27–0950	Spacer – Spindle Bearing	3
33	66–1340	Decal – Danger	2
34	92–8791	Cutting Deck	1
35	40–6400	Shaft – Roller	1

© The TORO Company –1996
All Rights Reserved

TPS

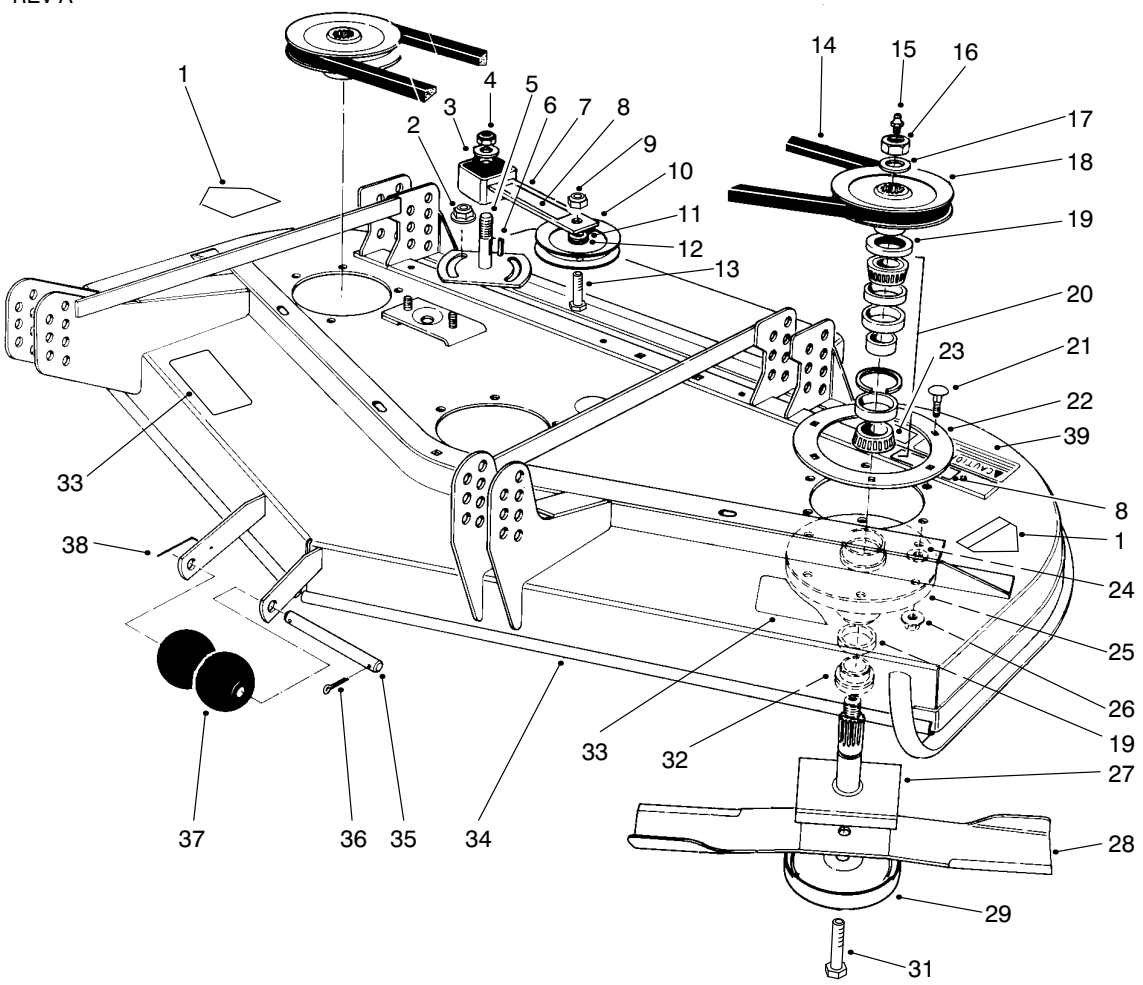

T−0577−2

DECK AND SPINDLE ASSEMBLY (Continued)

Ref. No.	Part No.	Description	No. Used
36	3272−11	Pin − Cotter	1
37	29−4820	Roller	2
38	57−0690	Pin − Cotter, Special	1
39	92−8779	Decal − Warning	1

Ref. No.	Part No.	Description	No. Used
*	27−0870	Assembly − Spindle (Incl. Ref. #15−20, 25, 27 & 32)	3

*Not Illustrated

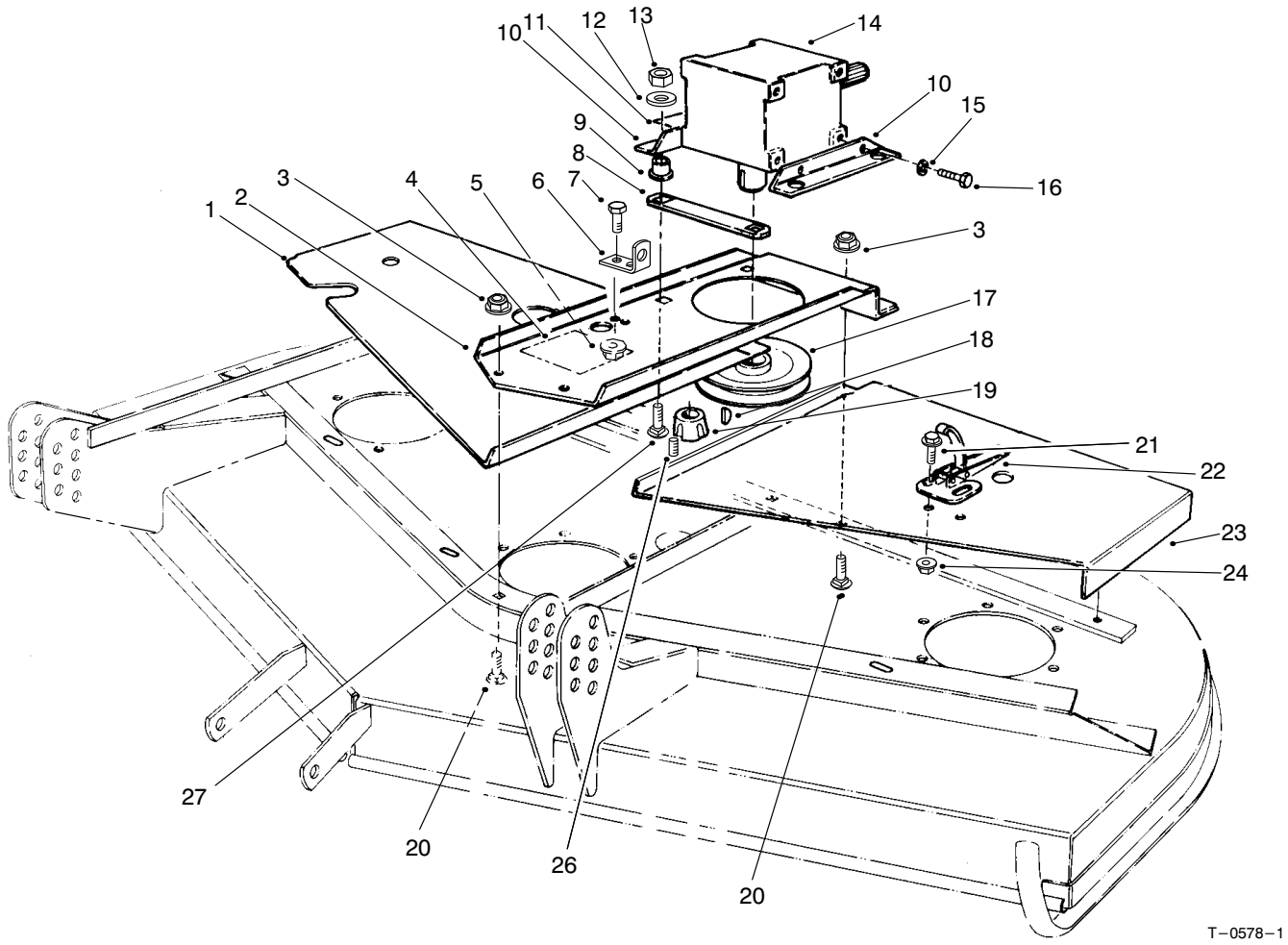

COVERS AND GEAR BOX ASSEMBLY

Ref. No.	Part No.	Description	No. Used
1	72−9330	Cover R.H.	1
2	72−9230	Base − Gear Box	1
3	3290−357	Nut − Flange	4
4	51−3960	Decal − 52”	1
5	32128−20	Nut − Flange	2
6	72−9240	Bracket − Extension	1
7	322−4	Screw − Cap Hex. Hd.	2
8	68−9890	Cover − Front Gear Box	1
9	63−9750	ISO Mount − Gear Box	4
10	68−8560	Bracket − Gear Box	2
11	70−2560	Decal − Lube	1
12	63−8410	Washer − Lock	4
13	32153−2	Nut	4
14	68−6810	Gear Box	1

Ref. No.	Part No.	Description	No. Used
15	3253−21	Washer − Lock	4
16	323−4	Screw − Cap Hex. Hd.	4
17	63−9900	Pulley	1
18	3257−5	Key − Woodruff	1
19	27−6140	Bushing − Taper Lock (Incl. Ref. #26)	1
20	3231−22	Bolt − Carriage	4
21	3290−321	Screw − Mach. Hex. Hd.	6
22	249−21	Latch − Draw	3
23	80−0080	Cover L.H.	1
24	32128−17	Nut − Flange	4
26	3245−9	Screw − Set Socket Hd.	2
27	3231−26	Bolt − Carriage	4

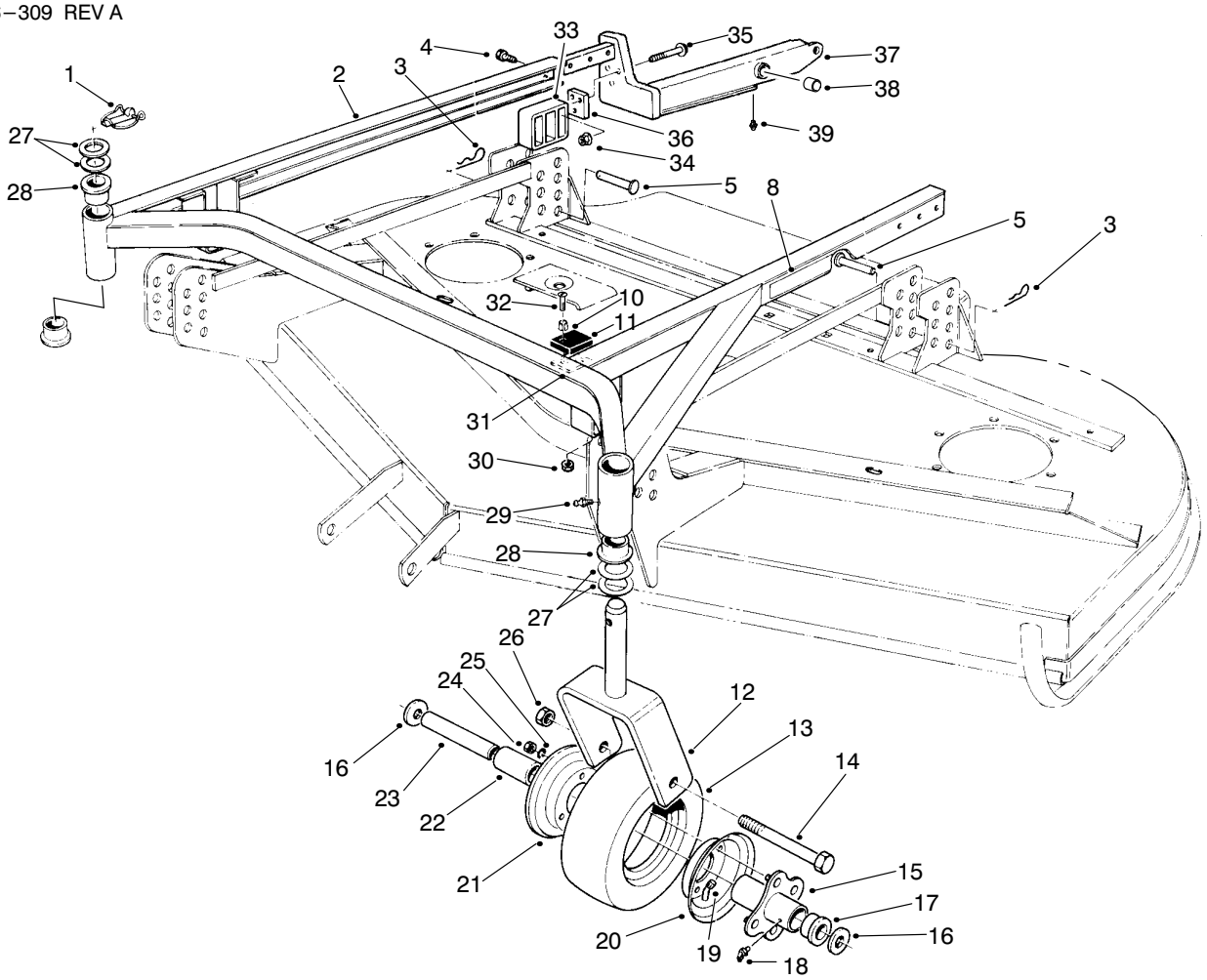

T−1250−1

CARRIER FRAME ASSEMBLY

Ref. No.	Part No.	Description	No. Used
1	283−71	Pin − Lynch	2
2	83−4550	Frame Assembly (Incl. Ref. #28 & 29)	1
3	3290−355	Pin − Cotter Hair	4
4	325−32	Screw − Cap Hex. Hd.	6
5	283−55	Pin − Clevis	4
8	71−2760	Decal − H.O.C.	1
10	40−9520	Spacer − Split	4
11	40−0330	Cushion − Rubber	2
12	68−8900	Fork − Front Castor	2
13	68−8960	Tire	2
14	325−19	Screw − Cap Hex. Hd.	2
15	68−8940	Hub − Center	2
16	3256−6	Washer − Flat	4
17	62−5580	Bushing	4
18	302−61	Fitting − Grease	2
19	68−8950	Tube w/Valve	2
20	68−8920	Wheel Half − Female	2
21	68−8930	Wheel Half − Male	2
22	62−5570	Bearing − Roller	2
23	68−8980	Bushing − Spanner	2
24	3219−2	Nut − Hex.	8

Ref. No.	Part No.	Description	No. Used
25	3253−4	Washer −Lock	8
26	32153−5	Nut − Lock	2
27	3−6781	Washer − Thrust	8
28	94−1291	Bushing − Special	4
29	302−5	Fitting − Grease	2
30	3296−2	Nut − Lock	4
31	42−6200	Shim − Cushion	3
32	32122−28	Screw − Mach. Truss Hd.	4
33	83−4520	Cradle − Rear	2
34	32128−40	Nut − Flange	6
35	66−9302	Screw − Flange Hd.	6
36	83−4580	Spacer	2
37	76−3080	Lift Arm − R.H. (Incl. Ref. #38 & 39)	1
*	76−3090	Lift Arm − L.H. (Incl. Ref. #38 & 39)	1
38	92−5648	Bushing	4
39	302−62	Fitting − Grease	2
*	13−3869	Castor Wheel Assembly (Inc. Ref. #13, 15, 17−22 & 24−25)	2

*Not Illustrated

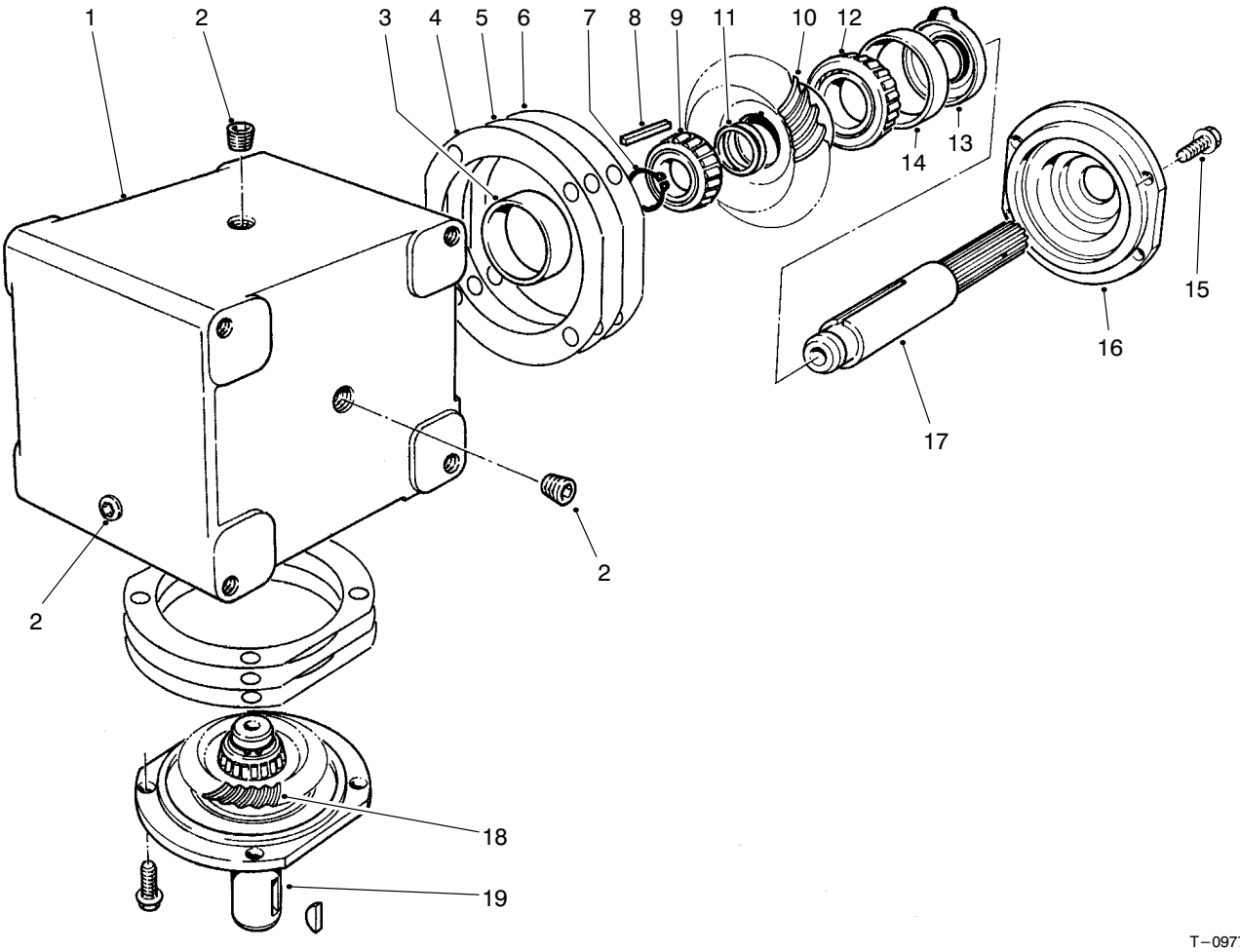

T−0977−2

GEAR BOX ASSEMBLY NO. 68−6810

Ref. No.	Part No.	Description	No. Used
1	68−7030	Housing	1
2	62−3490	Plug − Pipe (Solid)	4
3	62−3360	Cup − Bearing	2
4	62−3420	Gasket (.015)	A/R
5	62−3430	Gasket (.005)	A/R
6	62−3440	Gasket (.003)	A/R
7	68−7070	Ring − Retaining	2
8	62−3380	Key	2
9	62−3370	Cone − Bearing	2
10	68−7080	Gear	1

Ref. No.	Part No.	Description	No. Used
11	72−9370	Shim (.020)	2
12	62−3330	Cone − Gear	1
13	62−3400	Seal	2
14	62−3340	Cup − Bearing	2
15	62−3310	Screw − Cap	8
16	62−3410	Cap	2
17	68−7040	Shaft	1
18	68−7060	Gear	1
19	68−7050	Shaft	1

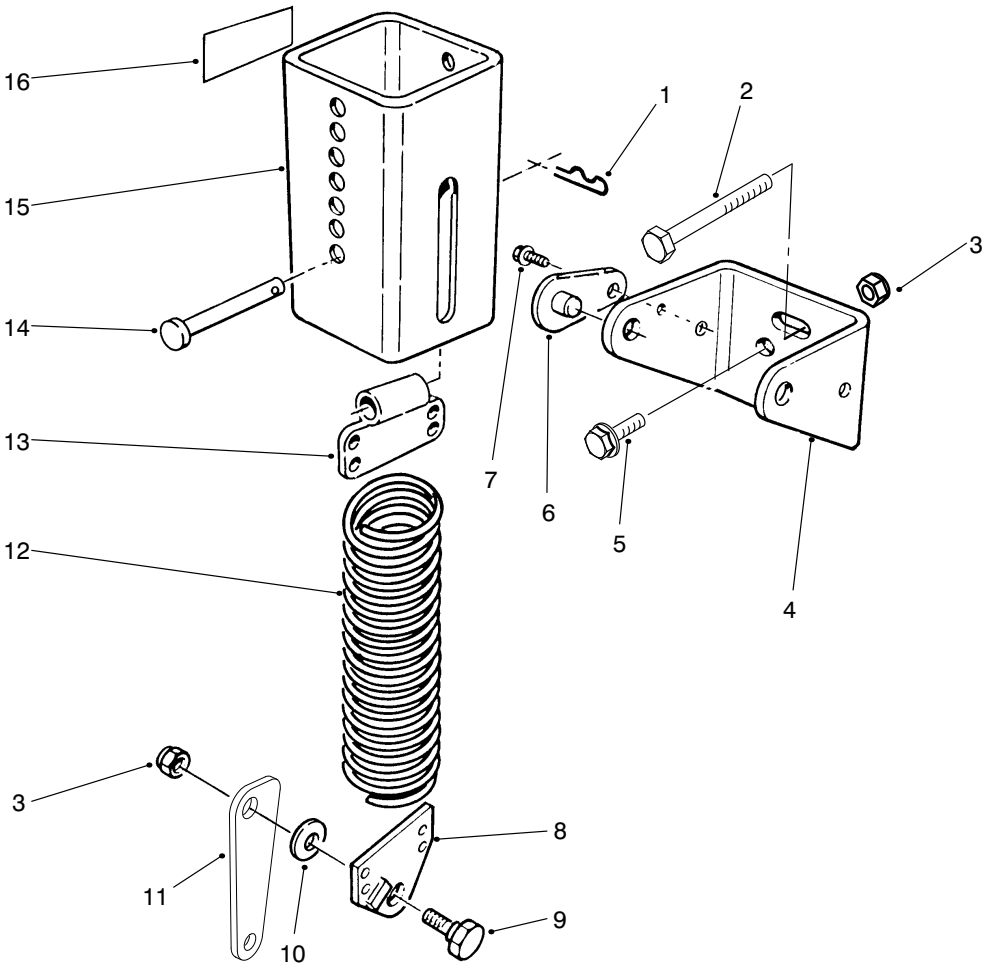

T−2508−1

COUNTER BALANCE

Ref. No.	Part No.	Description	No. Used
1	3290−355	Pin − Hair Cotter	1
2	323−11	Screw − Cap Hex. Hd.	2
3	3296−44	Nut − Lock	4
4	66−8460	Bracket − Mounting	1
5	3234−11	Screw − Flange Hd.	2
6	70−7920	Assembly − Pin, Lock	2
7	12−3270	Screw − Self Tapping	2
8	66−8420	End − Spring	1
9	46−3380	Bolt − Shoulder	2

Ref. No.	Part No.	Description	No. Used
10	3256−24	Washer − Flat	2
11	66−8450	Link − Knee	1
12	66−8390	Spring − Extension	1
13	70−7940	End − Spring	1
14	283−69	Pin − Clevis	1
15	70−7970	Assembly − Cover, Spring	1
16	55−4300	Decal − Caution	2
*	70−8091	Counter Balance Assembly (Incl. Ref.# 1−16	1

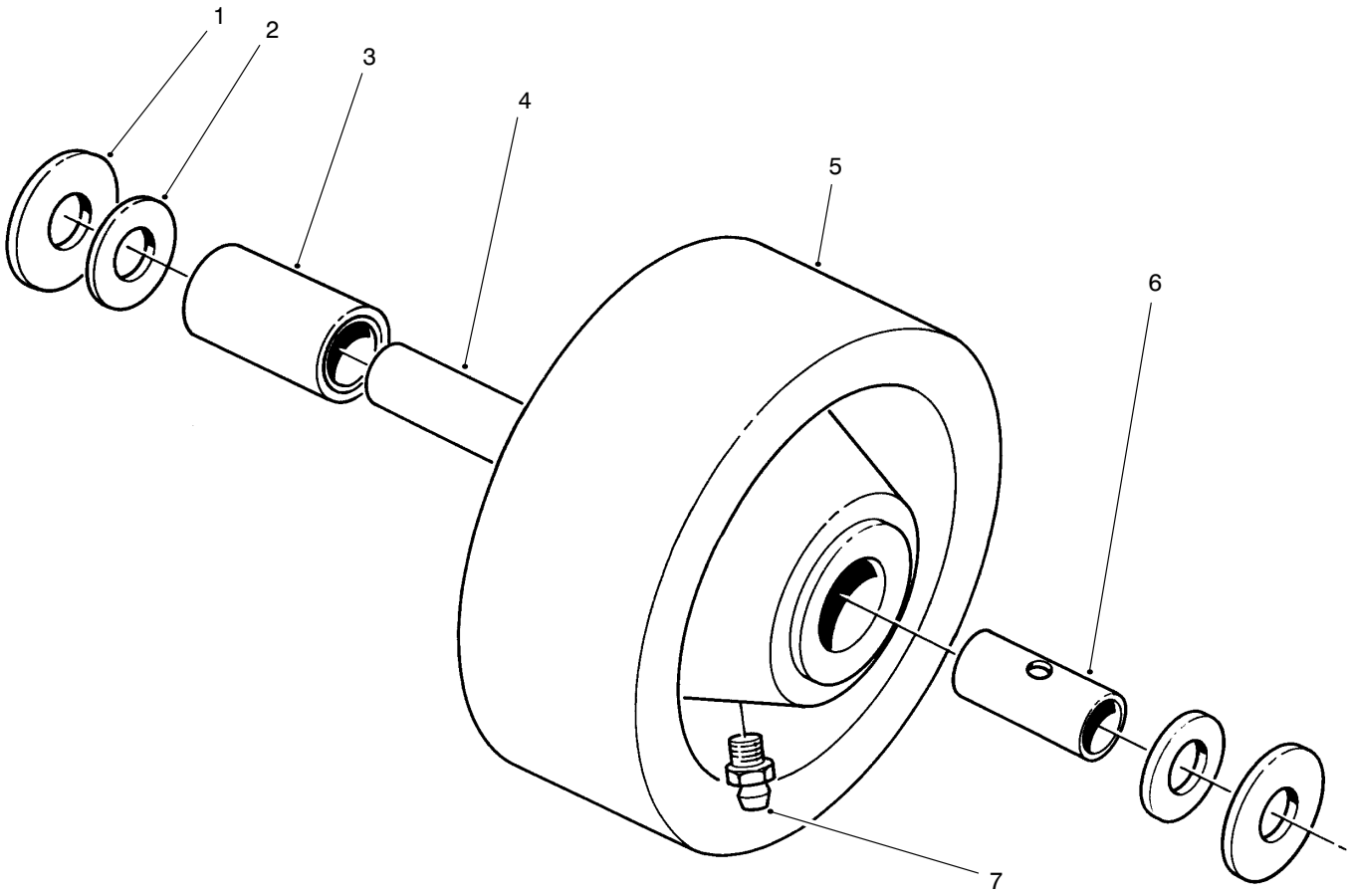

T−0633−1

PHENOLIC WHEEL ASSEMBLY NO. 27−1050 (Optional)

Ref. No.	Part No.	Description	No. Used
1	27−1170	Washer − Thrust	2
2	27−1180	Retainer − Bearing	2
3	27−1210	Bearing − Roller	1
†4	68−8980	Bushing − Spanner	1
5	27−1190	Wheel − Caster	1
6	27−1200	Bushing − Spanner	1
7	302−55	Fitting − Grease	1

†Must be ordered separately for use with 1/2” bolt.

TORO PART NUMBER INDEX

Part No.	Description	Pg. No.	Ref. No.	Qty.
3−6781	Washer − Thrust	4	27	8
5−1077	Key − Square	1	6	1
7−0081	Washer	1	11	1
7−4150	Washer	1	17	3
12−3270	Screw − Self Tapping	6	7	2
13−3869	Castor Wheel Assembly	4	*	2
27−0870	Assembly − Spindle	2	*	3
27−0920	Spindle Shaft	1	27	3
27−0950	Spacer − Spindle Bearing	1	32	3
27−0970	Pulley	1	18	3
27−0990	Blade	1	28	3
27−1160	V−Belt	1	14	1
27−1170	Washer − Thrust	7	1	2
27−1180	Retainer − Bearing	7	2	2
27−1190	Wheel − Caster	7	5	1
27−1200	Bushing − Spanner	7	6	1
27−1210	Bearing − Roller	7	3	1
27−6140	Bushing − Taper Lock	3	19	1
27−7680	Ring − Deck Support	1	22	2
27−8580	Idler Socket	1	7	1
28−9060	Plate − Idler	1	5	1
29−4820	Roller	2	37	2
40−0330	Cushion − Rubber	4	11	2
40−6400	Shaft − Roller	1	35	1
40−9520	Spacer − Split	4	10	4
42−6200	Shim − Cushion	4	31	3
43−8480	Decal − Danger	1	1	2
46−3380	Bolt − Shoulder	6	9	2
46−8530	Assembly − Bearing	1	20	3
51−3960	Decal − 52	3	4	1
55−4300	Decal − Caution	6	16	2
57−0690	Pin − Cotter, Special	2	38	1
61−4160	Housing − Spindle	1	25	3
62−3310	Screw − Cap	5	15	8
62−3330	Cone − Gear	5	12	1
62−3340	Cup − Bearing	5	14	2
62−3360	Cup − Bearing	5	3	2
62−3370	Cone − Bearing	5	9	2
62−3380	Key	5	8	2
62−3400	Seal	5	13	2
62−3410	Cap	5	16	2
62−3420	Gasket (.015)	5	4	A/R
62−3430	Gasket (.005)	5	5	A/R
62−3440	Gasket (.003)	5	6	A/R
62−3490	Plug − Pipe (Solid)	5	2	4
62−5570	Bearing − Roller	4	22	2
62−5580	Bushing	4	17	4
63−8410	Washer − Lock	3	12	4
63−9750	ISO Mount − Gear Box	3	9	4
63−9900	Pulley	3	17	1
65−5940	Pulley − Idler	1	10	1
65−5950	Bushing	1	12	1
66−1340	Decal − Danger	1	33	2
66−8390	Spring − Extension	6	12	1
66−8420	End − Spring	6	8	1
66−8450	Link − Knee	6	11	1
66−8460	Bracket − Mounting	6	4	1
66−9302	Screw − Flange Hd.	4	35	6
67−5360	Decal − Shield Missing	1	8	2
68−6810	Gear Box	3	14	1
68−7030	Housing	5	1	1
68−7040	Shaft	5	17	1
68−7050	Shaft	5	19	1
68−7060	Gear	5	18	1
68−7070	Ring − Retaining	5	7	2
68−7080	Gear	5	10	1
68−8340	Decal − Blade Bolt Torque	1	23	1
68−8560	Bracket − Gear Box	3	10	2
68−8900	Fork − Front Castor	4	12	2
68−8920	Wheel Half − Female	4	20	2
68−8930	Wheel Half − Male	4	21	2
68−8940	Hub − Center	4	15	2
68−8950	Tube w/Valve	4	19	2
68−8960	Tire	4	13	2
68−8980	Bushing − Spanner	7	4	1
68−8980	Bushing − Spanner	4	23	2
68−9890	Cover − Front Gear Box	3	8	1
70−2560	Decal − Lube	3	11	1
70−7920	Assembly − Pin, Lock	6	6	2
70−7940	End − Spring	6	13	1
70−7970	Assembly − Cover, Spring	6	15	1
70−8091	Counter Balance Assembly	6	*	1
71−2760	Decal − H.O.C.	4	8	1
72−9230	Base − Gear Box	3	2	1
72−9240	Bracket − Extension	3	6	1
72−9330	Cover R.H.	3	1	1
72−9360	Cup − Anti Scalp	1	29	3
72−9370	Shim (.020)	5	11	2
76−3080	Lift Arm − R.H.	4	37	1
76−3090	Lift Arm − L.H.	4	*	1
80−0080	Cover L.H.	3	23	1
83−4520	Cradle − Rear	4	33	2
83−4550	Frame Assembly	4	2	1
83−4580	Spacer	4	36	2
92−5648	Bushing	4	38	4
92−5816	Screw − Blade	1	31	3
92−8779	Decal − Warning	2	39	1
92−8791	Cutting Deck	1	34	1
94−1291	Bushing − Special	4	28	4
249−21	Latch − Draw	3	22	3
253−139	Seal − Wave	1	19	6
283−55	Pin − Clevis	4	5	4
283−69	Pin − Clevis	6	14	1
283−71	Pin − Lynch	4	1	2
302−2	Fitting − Grease	1	15	3
302−5	Fitting − Grease	4	29	2
302−55	Fitting − Grease	7	7	1
302−61	Fitting − Grease	4	18	2
302−62	Fitting − Grease	4	39	2
322−4	Screw − Cap Hex. Hd.	3	7	2
323−4	Screw − Cap Hex. Hd.	3	16	4
323−11	Screw − Cap Hex. Hd.	6	2	2
325−19	Screw − Cap Hex. Hd.	4	14	2
325−32	Screw − Cap Hex. Hd.	4	4	6
3211−8	Screw − Cap Hex. Hd.	1	13	1
3219−2	Nut − Hex.	4	24	8
3231−22	Bolt − Carriage	3	20	4
3231−22	Bolt − Carriage	1	21	18
3231−26	Bolt − Carriage	3	27	4
3234−11	Screw − Flange Hd.	6	5	2
3245−9	Screw − Set Socket Hd.	3	26	2
3253−4	Washer −Lock	4	25	8
3253−21	Washer − Lock	3	15	4
3256−6	Washer − Flat	4	16	4
3256−24	Washer − Flat	6	10	2
3256−24	Washer − Flat	1	24	18
3256−27	Washer − Flat	1	3	1
3257−5	Key − Woodruff	3	18	1
3272−11	Pin − Cotter	2	36	1
3290−321	Screw − Mach. Hex. Hd.	3	21	6
3290−355	Pin − Cotter Hair	4	3	4
3290−355	Pin − Hair Cotter	6	1	1
3290−357	Nut − Flange	3	3	4
3296−2	Nut − Lock	4	30	4
3296−5	Nut − Lock	1	9	1
3296−33	Nut − Lock	1	4	1
3296−44	Nut − Lock	6	3	4
3296−357	Nut − Flange	1	2	2
32122−28	Screw − Mach. Truss Hd.	4	32	4
32128−17	Nut − Flange	3	24	4
32128−20	Nut − Flange	3	5	2
32128−21	Nut − Flange	1	26	18
32128−40	Nut − Flange	4	34	6
32146−20	Nut − Hex. Lock, Jam	1	16	3
32153−2	Nut	3	13	4
32153−5	Nut − Lock	4	26	2

*Not Illustrated