Form No. 3369-487 Rev B

Power Clear 418 ZR/ZE Snowthrower

Model No. 38272—Serial No. 312000001 and Up
Model No. 38282—Serial No. 312000001 and Up

Operator's Manual

Introduction

This machine is intended to be used by residential homeowners. It is designed primarily for removing snow from paved surfaces, such as driveways and sidewalks, and other surfaces for traffic on residential or commercial properties. It is not designed for removing materials other than snow, nor is it designed for clearing off gravel surfaces.

Read this information carefully to learn how to operate and maintain your product properly and to avoid injury and product damage. You are responsible for operating the product properly and safely.

You may contact Toro directly at www.Toro.com for product and accessory information, help finding a dealer, or to register your product.

Whenever you need service, genuine Toro parts, or additional information, contact an Authorized Service Dealer or Toro Customer Service and have the model and serial numbers of your product ready. Figure 1 identifies the location of the model and serial numbers on the product. Write the numbers in the space provided.

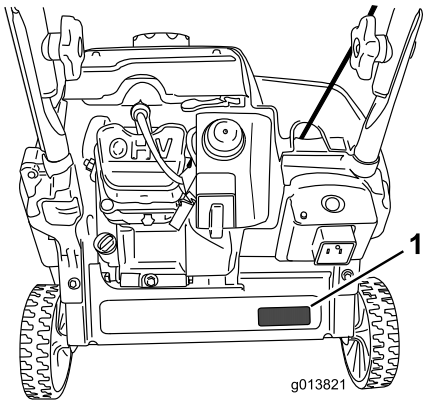

Figure 1

1. Model and serial number location

Model No. _____

Serial No. _____

This manual identifies potential hazards and has safety messages identified by the safety alert symbol (Figure 2), which signals a hazard that may cause serious injury or death if you do not follow the recommended precautions.



Figure 2

1. Safety alert symbol

This manual uses 2 words to highlight information. **Important** calls attention to special mechanical information and **Note** emphasizes general information worthy of special attention.

Safety

This machine meets or exceeds the B71.3 specifications of the American National Standards Institute in effect at the time of production.

Read and understand the contents of this manual before you start the engine.

⚠This is the safety alert symbol. It is used to alert you to potential personal injury hazards. Obey all safety messages that follow this symbol to avoid possible injury or death.

Improperly using or maintaining this machine could result in injury or death. To reduce this potential, comply with the following safety instructions.

This machine is capable of injuring hands and feet and of throwing objects. Failure to observe the following safety instructions could result in serious injury.

© 2011—The Toro® Company
8111 Lyndale Avenue South
Bloomington, MN 55420

Register at www.Toro.com.

Original Instructions (EN)
Printed in the USA
All Rights Reserved

Training

- Read, understand, and follow all instructions on the machine and in the manual(s) before operating this machine. Be thoroughly familiar with the controls and the proper use of the machine. Know how to stop the machine and disengage the controls quickly.
- Never allow children to operate the machine. Never allow adults to operate the machine without proper instruction.
- Keep the area of operation clear of all persons, particularly small children.
- Exercise caution to avoid slipping or falling.

Preparation

- Thoroughly inspect the area where the machine is to be used and remove all doormats, sleds, boards, wires, and other foreign objects.
- Do not operate the machine without wearing adequate winter garments. Avoid loose fitting clothing that can get caught in moving parts. Wear footwear that will improve footing on slippery surfaces.
- Handle fuel with care; it is highly flammable.
  - Use an approved fuel container.
  - Never add fuel to a running engine or hot engine.
  - Fill fuel tank outdoors with extreme care. Never fill fuel tank indoors.
  - Never fill containers inside a vehicle or on a truck or trailer bed with a plastic liner. Always place containers on the ground, away from your vehicle, before filling.
  - When practical, remove gas-powered machinery from the truck or trailer and refuel it on the ground. If this is not possible, then refuel such machinery on a trailer with a portable container, rather than from a gasoline dispenser nozzle.
  - Keep the nozzle in contact with the rim of the fuel tank or container opening at all times, until refueling is complete. Do not use a nozzle lock-open device.
  - Replace gasoline cap securely and wipe up spilled fuel.
  - If fuel is spilled on clothing, change clothing immediately.
- Use extension cords and receptacles as specified by the manufacturer for all machines with electric starting motors.
- Do not attempt to clear snow from a gravel or crushed rock surface. This product is intended for use only on paved surfaces.
- Never attempt to make any adjustments while the engine is running (except when specifically recommended by manufacturer).
- Always wear safety glasses or eye shields during operation or while performing an adjustment or repair to protect eyes from foreign objects that may be thrown from the machine.

Operation

- Do not put hands or feet near or under rotating parts. Keep clear of the discharge opening at all times.
- Exercise extreme caution when operating on or crossing gravel drives, walks, or roads. Stay alert for hidden hazards or traffic.
- After striking a foreign object, stop the engine, remove the ignition key, thoroughly inspect the machine for any damage, and repair the damage before restarting and operating the machine.
- If the machine should start to vibrate abnormally, stop the engine and check immediately for the cause. Vibration is generally a warning of trouble.
- Stop the engine whenever you leave the operating position, before unclogging the rotor blade housing or discharge chute, and when making any repairs, adjustments or inspections.
- When cleaning, repairing, or inspecting the machine, stop the engine and make certain that the rotor blades and all moving parts have stopped.
- Do not run the engine indoors, except when starting the engine and for transporting the machine in or out of the building. Open the outside doors; exhaust fumes are dangerous.
- Exercise extreme caution when operating on slopes.
- Never operate the machine without proper guards and other safety protective devices in place and working.
- Never direct the discharge toward people or areas where property damage can occur. Keep children and others away.
- Do not overload the machine capacity by attempting to clear snow at too fast a rate.
- Look behind and use care when backing up with the machine.

- Disengage power to the rotor blades when machine is transported or not in use.
- Never operate the machine without good visibility or light. Always be sure of your footing, and keep a firm hold on the handles. Walk; never run.
- Never touch a hot engine or muffler.

Clearing a Clogged Discharge Chute

Hand contact with the rotating rotor blades inside the discharge chute is the most common cause of injury associated with snowthrowers. Never use your hand to clean out the discharge chute.

To clear the chute:

- **Shut the engine off!**
- Wait 10 seconds to be sure the rotor blades have stopped rotating.
- Always use a clean-out tool, not your hands.

Maintenance and Storage

- Check all fasteners at frequent intervals for proper tightness to be sure the machine is in safe working condition.
- Never store the machine with fuel in the fuel tank inside a building where ignition sources are present, such as hot water heaters, space heaters, or clothes dryers. Allow the engine to cool before storing in any enclosure.
- Always refer to the *Operator's Manual* for important details if the machine is to be stored for an extended period.
- Maintain or replace safety and instruction labels, as necessary.
- Run the machine a few minutes after throwing snow to prevent freeze-up of the rotor blades.

Toro Snowthrower Safety

The following list contains safety information specific to Toro products or other safety information that you must know.

- **Rotating rotor blades can injure fingers or hands.** Stay behind the handles and away from the discharge opening while operating the machine. **Keep your face, hands, feet, and any other part of your body or clothing away from moving or rotating parts.**
- Before adjusting, cleaning, repairing, and inspecting the machine, and before unclogging the discharge chute, **stop the engine, remove the key, and wait for all moving parts to stop.**
- **Before** leaving the operating position, stop the engine, remove the ignition key, and wait for all moving parts to stop.
- If a shield, safety device, or decal is damaged, illegible, or lost, repair or replace it before beginning operation. Also, tighten any loose fasteners.
- **Do not** smoke while handling gasoline.
- **Do not** use the machine on a roof.
- Do not touch the engine while it is running or soon after it has stopped because the engine may be hot enough to cause a burn.
- Perform only those maintenance instructions described in this manual. Before performing any maintenance, service, or adjustment, stop the engine and remove the key. If major repairs are ever needed, contact an Authorized Service Dealer.
- Do not change the governor settings on the engine.
- When storing the machine for more than 30 days, drain the fuel from the fuel tank to prevent a potential hazard. Store fuel in an approved fuel container. Remove the key from the ignition switch before storing the machine.
- Purchase only genuine Toro replacement parts and accessories.

Safety and Instructional Decals

Important: **Safety and instruction decals are located near areas of potential danger. Replace damaged decals.**

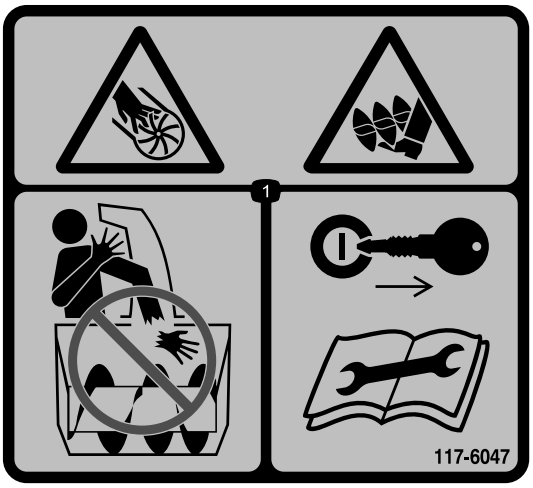

117-6047

1. Cutting dismemberment, impeller and cutting dismemberment, auger hazards—do not place your hand in the chute; remove the ignition key and read the instructions before servicing or performing maintenance.

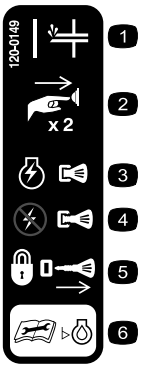

120-0149

1. Primer
2. Push the primer two times to prime the engine.
3. Push key in to switch engine On.
4. Pull key to switch engine switch Off.
5. Remove key to lock machine.
6. Read the *Operator's Manual* before checking engine oil level.



117-7713

1. Warning—read the *Operator's Manual*.
2. Cutting/dismemberment hazard, impeller—stop the engine before leaving the machine.
3. Thrown object hazard—keep bystanders a safe distance from the machine.
4. Fuel spill hazard—do not tip machine forward or backward.
5. To engage the auger, squeeze the control bar.
6. Release the control bar to disengage the auger.

Setup

Loose Parts

Use the chart below to verify that all parts have been shipped.

Procedure	Description	Qty.	Use
1	Oval-head bolts Curved washers Handle knobs	2 2 2	Install the handle.
2	No parts required	–	Install the recoil starter handle.
3	Discharge chute assembly Screws Washers Locknuts Knob	1 2 2 2 1	Install the discharge chute assembly.
4	Bottle of engine oil	1	Fill the engine with oil.
5	No parts required	–	Adjust the control cable.

1

Installing the Handle

Parts needed for this procedure:

2	Oval-head bolts
2	Curved washers
2	Handle knobs

Procedure

1. Position the ends of the upper handle on the inside of the lower handle and align the holes.
2. Insert the oval-head bolts into the aligned holes, with the bolt heads on the outside of the handle (Figure 3).

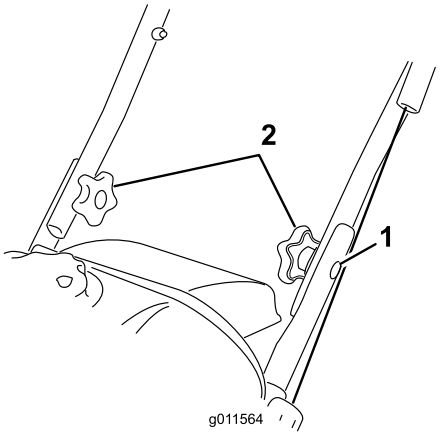

Figure 3

1. Oval-head bolt (2)
2. Curved washers and handle knobs

3. Install the curved washers and the handle knobs on the oval-head bolts on the inside of the handle (Figure 3) and **tighten the knobs securely**.

Important: Ensure that the cable is routed to the outside of the handle.

2

Installing the Recoil Starter Handle

No Parts Required

Procedure

Install the recoil starter handle in the rope guide as shown in Figure 4.

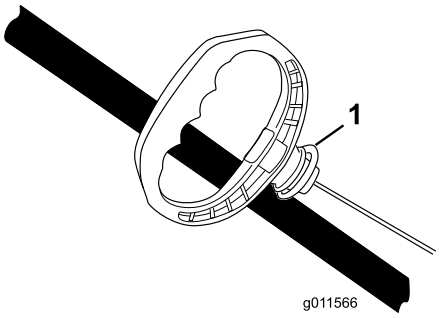

Figure 4

1. Rope guide

3

Installing the Discharge Chute Assembly

Parts needed for this procedure:

1	Discharge chute assembly
2	Screws
2	Washers
2	Locknuts
1	Knob

Procedure

Install the discharge chute assembly as shown in Figure 5.

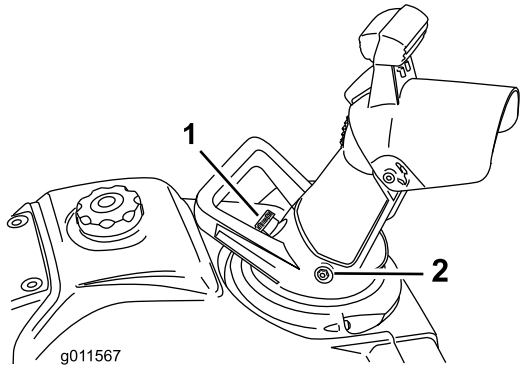

Figure 5

1. Knob
2. Bolt (2), washer (2), and locknut (2)

Note: Install the bolts from the inside of discharge chute assembly so that the washers and locknuts are on the outside of the chute.

Important: Do not overtighten the locknuts.

4

Filling the Engine with Oil

Parts needed for this procedure:

1	Bottle of engine oil

Procedure

Your machine does not come with oil in the engine, but it does come with a bottle of oil.

Important: Before starting the engine, fill the engine with oil.

Max fill: 12 oz. (0.35 l), type: automotive detergent oil with an API service classification of SJ, SL, or higher.

Use Figure 6 to select the best oil viscosity for the outdoor temperature range expected:

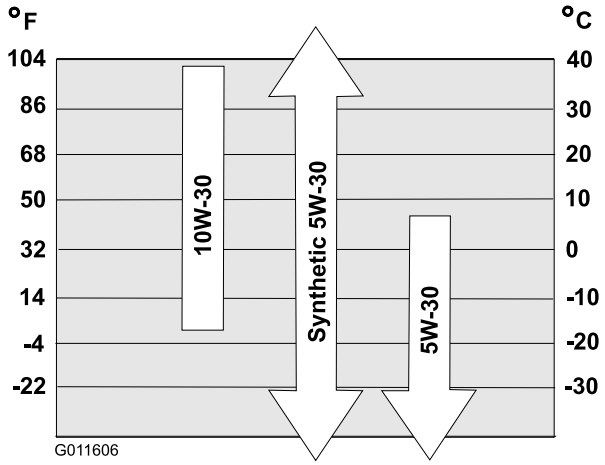

Figure 6

1. Move the machine to a level surface.
2. Clean around the oil fill cap (Figure 11).
3. Unscrew the oil fill cap and remove it.
4. **Slowly** pour oil into the oil fill hole. Wait 3 minutes, then check the oil level on the dipstick by wiping the dipstick clean and then inserting, **but not screwing in,** the oil fill cap into the hole.

   Note: To determine the proper oil level on the dipstick, refer to Figure 7.

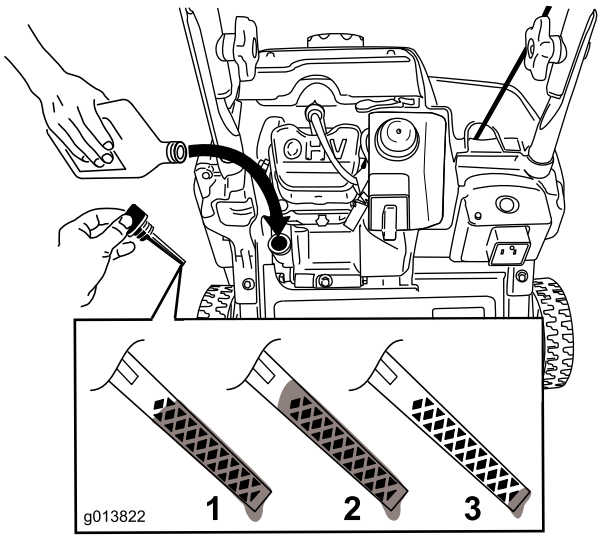

Figure 7

1. The oil level is at its maximum.
2. The oil level is too high—remove oil from the crankcase.
3. The oil level is too low—add oil to the crankcase.

Note: Fill the engine crankcase with oil until the dipstick indicates that the engine oil level is correct as shown in Figure 7. If you overfill the engine with oil, remove the excess oil as directed in Changing the Engine Oil.

Note: You may tip the machine forward (handle up) a little to make adding oil easier. Remember to return the machine to the operating position before checking the oil level.

Important: Do not tip the machine all the way forward onto its nose, or fuel may leak out of the machine.

5. Screw the oil fill cap into the oil fill hole and hand tighten it securely.

5

Adjusting the Control Cable

No Parts Required

Checking the Control Cable

Service Interval: After the first hour—Check the control cable and adjust it if necessary.

Yearly—Check the control cable and adjust it if necessary.

Important: You must check and may need to adjust the control cable before you operate the machine for the first time.

Move the control bar back toward the handle to remove the slack in the control cable (Figure 8).

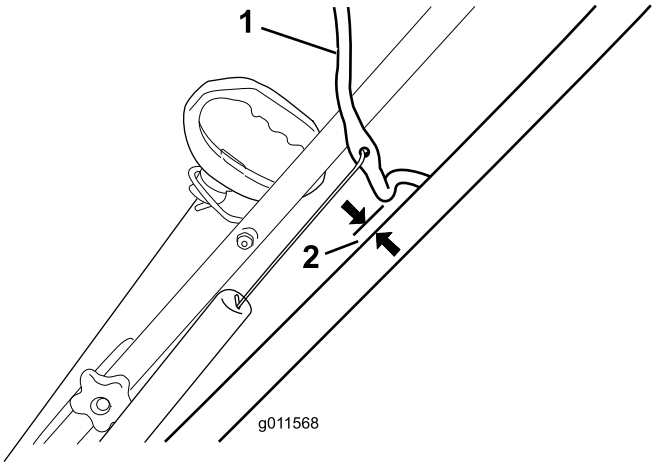

Figure 8

1. Control bar
2. 1/16 to 1/8 inch (2 to 3 mm)

Note: Ensure that a gap of 1/16 to 1/8 inch (2 to 3 mm) exists between the control bar and the handle (Figure 8).

Important: The control cable must contain some slack when you disengage the control bar for the rotor blades to stop properly.

Adjusting the Control Cable

1. Slide up the spring cover and unhook the spring from the adjuster link (Figure 9).

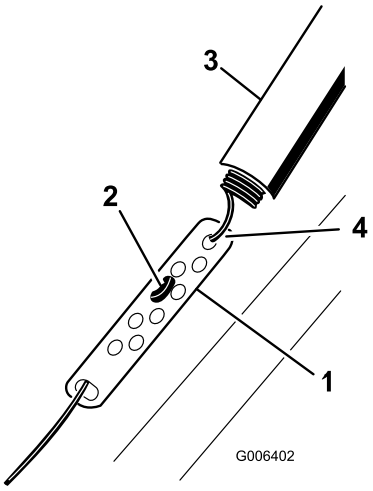

Figure 9

1. Adjuster link
2. Z-fitting
3. Spring cover
4. Unhook the spring here.

Note: You can pull up the adjuster link and cable to make unhooking the spring easier.

2. Move the Z-fitting to a higher or lower hole on the adjuster link as needed to obtain the 1/16-inch to 1/8-inch (2 mm to 3 mm) gap between the control bar and the handle (Figure 9).

Note: Moving the Z-fitting higher decreases the gap between the control bar and the handle; moving it lower increases the gap.

3. Hook the spring to the adjuster link and slide the spring cover over the adjuster link.
4. Check the adjustment; refer to Checking the Control Cable.

Note: The belt may slip (squeal) in wet conditions; to dry out the drive system, start the rotor and run it without a load for 30 seconds.

Product Overview

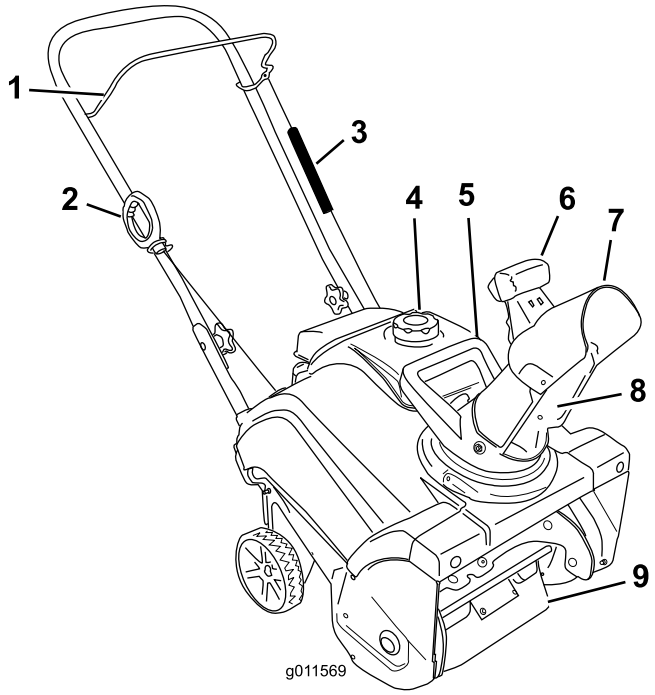

Figure 10

1. Control bar
2. Recoil start handle
3. Spring cover
4. Fuel tank cap
5. Chute handle
6. Chute deflector trigger
7. Chute deflector
8. Discharge chute
9. Rotor blades

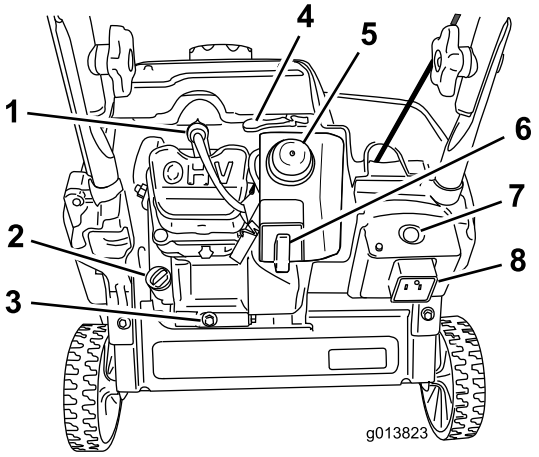

Figure 11

1. Spark plug
2. Oil fill cap
3. Oil drain plug
4. Choke lever
5. Primer
6. Ignition key
7. Electric-start button (model 38282 only)
8. Plug-in for electric start (model 38282 only)

Operation

Note: Determine the left and right sides of the machine from the normal operating position.

⚠ DANGER

Gasoline is extremely flammable and explosive. A fire or explosion from gasoline can burn you and others.

- **To prevent a static charge from igniting the gasoline, place the container and/or machine on the ground before filling, not in a vehicle or on an object.**
- **Fill the tank outdoors when the engine is cold. Wipe up spills.**
- **Do not handle gasoline when smoking or around an open flame or sparks.**
- **Store gasoline in an approved fuel container, out of the reach of children.**
- **Do not tip the machine either forward or backward with fuel in the fuel tank; otherwise, fuel may leak out of the machine.**

Filling the Fuel Tank

Fill the fuel tank with fresh unleaded gasoline having an octane rating at or near 87 from a major name-brand service station (Figure 12).

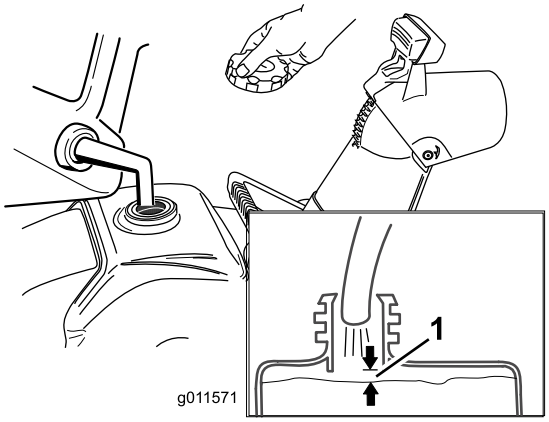

Figure 12

1. 1/2 inch (13 mm)

Important: Do not add oil to the gasoline.

Important: Do not use E85 or E20 fuel. Alternative fuels with high alcohol content can cause hard starting, poor engine performance, and may cause internal engine damage.

Note: For best results, purchase only the quantity of gasoline that you expect to use in 30 days. Otherwise, you may add fuel stabilizer to newly purchased gasoline to keep it fresh for up to 6 months.

Checking the Engine Oil Level

Service Interval: Before each use or daily—Check the engine oil level and add oil if necessary.

1. Ensure that the fuel tank is not overfilled (refer to Figure 12) and that the fuel cap is securely in place.
2. Move the machine to a level surface.
3. Clean around the oil fill cap (Figure 11).
4. Unscrew the oil fill cap and remove it.
5. Wipe the dipstick on the oil fill cap with a clean cloth.
6. Insert, **but do not screw in**, the oil fill cap into the oil fill hole.
7. Remove the oil fill cap and check the dipstick.
8. To determine the proper oil level on the dipstick, refer to Figure 13.

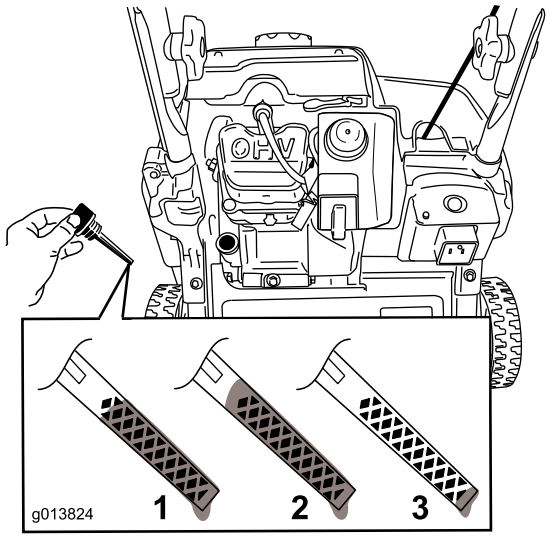

Figure 13

1. The oil level is at its maximum.
2. The oil level is too high—remove oil from the crankcase.
3. The oil level is too low—add oil to the crankcase.

9. If the oil level is low, **slowly** pour oil into the oil fill hole. Wait 3 minutes, then check the oil level on the dipstick by wiping the dipstick clean and then inserting, **but not screwing in,** the oil fill cap into the hole.

   Note: You may tip the machine forward (handle up) a little to make adding oil easier. Remember to return the machine to the operating position before checking the oil level.

Important: Do not tip the machine all the way forward onto its nose, or fuel may leak out of the machine.

Max fill: 12 oz. (0.35 l), type: automotive detergent oil with an API service classification of SJ, SL, or higher.

Use Figure 14 to select the best oil viscosity for the outdoor temperature range expected:

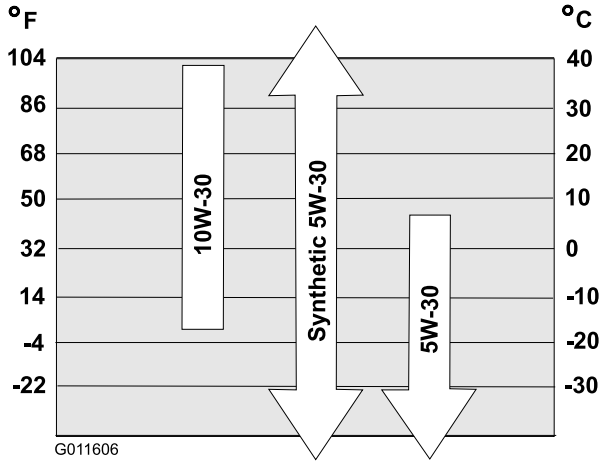

Figure 14

Note: Fill the engine crankcase with oil until the dipstick indicates that the engine oil level is correct as shown in Figure 13. If you overfill the engine with oil, remove the excess oil as directed in Changing the Engine Oil.

10. Screw the oil fill cap into the oil fill hole and hand tighten it securely.

Starting the Engine

1. Push the ignition key fully inward to the On position (Figure 15).

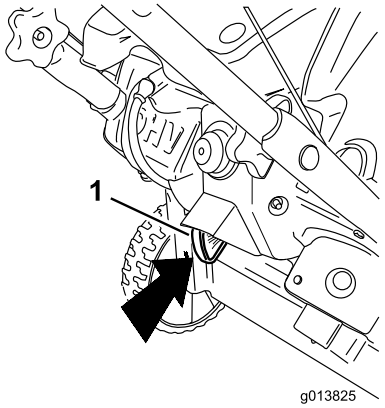

Figure 15

1. Ignition key

2. Move the choke lever fully to the right (Figure 16).

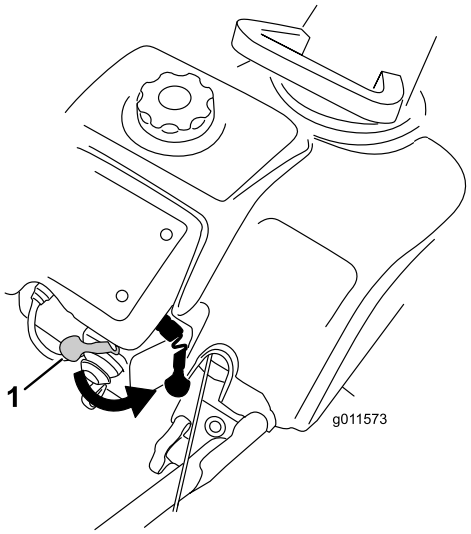

Figure 16

1. Choke lever

3. Firmly push in the primer 2 times with your thumb, holding the primer in for a second before releasing it each time (Figure 17).

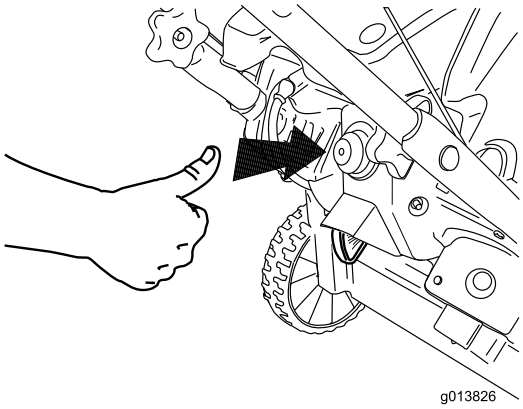

Figure 17

Note: Remove your glove when you push in the primer so that air cannot escape from the primer hole.

Important: Do not use the primer or the choke if the engine has been running and is hot. Excessive priming may flood the engine and prevent it from starting.

4. Connect an extension cord to a power source and the machine, and push the electric-start button (model 38282 only) (Figure 18), or pull the recoil start handle (Figure 19).

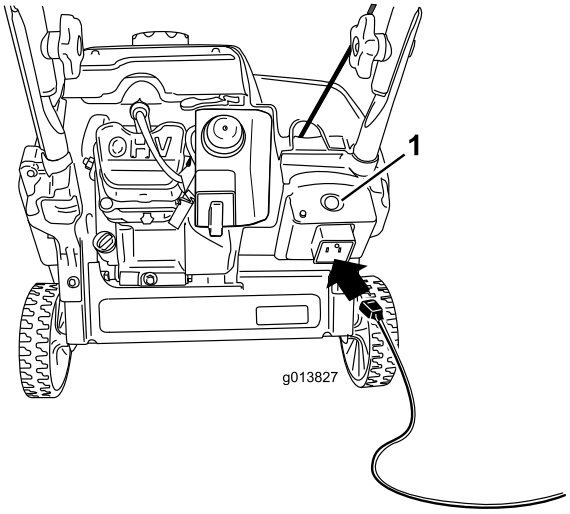

Figure 18

1. Electric-start button

Note: Use only a UL-listed, 16-gauge extension cord recommended for outdoor use that is not longer than 50 feet (15 m).

⚠ WARNING

The electrical cord can become damaged, causing a shock or fire.

Thoroughly inspect the electrical cord before plugging it into a power source. If the cord is damaged, do not use it to start the machine. Replace or repair the damaged cord immediately. Contact an Authorized Service Dealer for assistance.

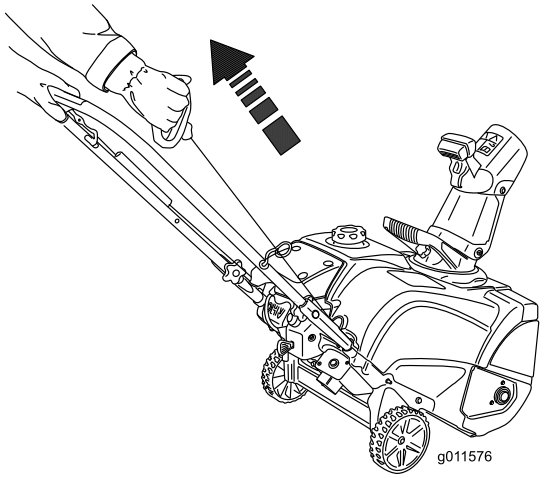

Figure 19

Important: Run the electric starter no more than 10 times at intervals of 5 seconds on, then 5 seconds off. Running the electric starter extensively can overheat and damage it. If the engine does not start after this series of attempts, wait at least 40 minutes to allow the starter to cool before attempting to start it again. If the engine does not start after the second series of attempts, take the machine to an Authorized Service Dealer for service (model 38282 only).

Note: If the recoil starter does not operate properly, it may be frozen. Thaw out the starter before attempting to start the machine.

5. While the engine is running, move the choke lever gradually to the left.
6. Unplug the extension cord from the power source and the machine (model 38282 only).

⚠ CAUTION

If you leave the machine plugged into a power source, someone can inadvertently start the machine and injure people or damage property (model 38282 only).

Unplug the power cord whenever you are not starting the machine.

Engaging the Rotor Blades

To engage the rotor blades, hold the control bar against the handle (Figure 20).

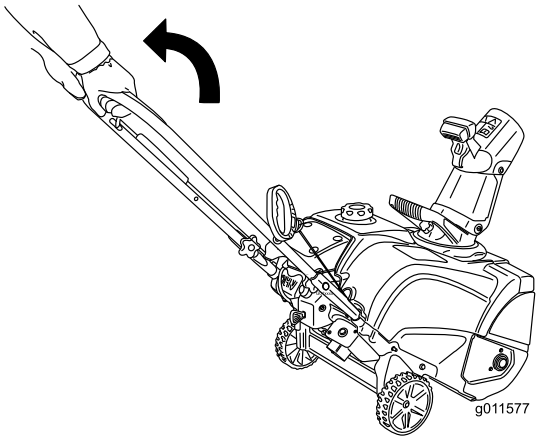

Figure 20

1. Control bar

Disengaging the Rotor Blades

To disengage the rotor blades, release the control bar (Figure 21).

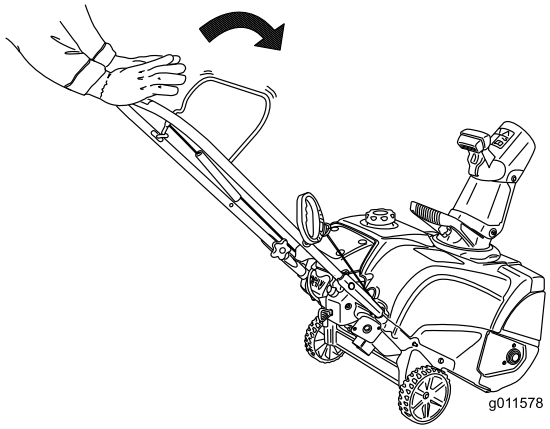

Figure 21

Stopping the Engine

To stop the engine, pull the ignition key outward until it clicks into the Off position (Figure 22) or move the choke lever fully to the right (Figure 16).

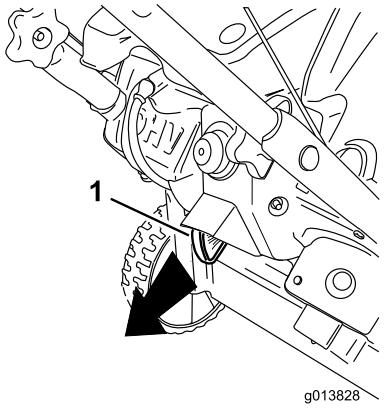

Figure 22

1. Ignition key

Adjusting the Discharge Chute and Chute Deflector

To adjust the discharge chute, move the chute handle as shown in Figure 23.

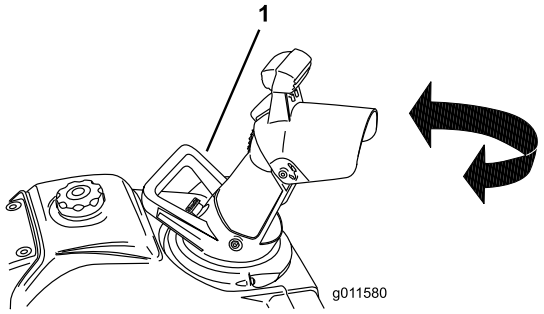

Figure 23

1. Chute handle

To raise or lower the angle of the chute deflector, press the trigger on the chute deflector and move the chute deflector up or down (Figure 24). Release the trigger to lock the chute deflector in place.

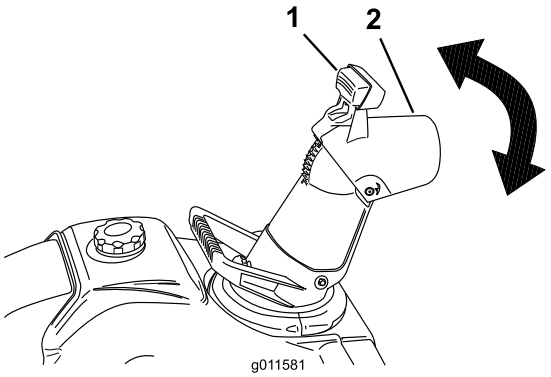

Figure 24

1. Trigger
2. Chute deflector

Clearing a Clogged Discharge Chute

Important: Hand contact with the rotating rotor blades inside the discharge chute is the most common cause of injury associated with machine. Never use your hand to clean out the discharge chute.

To clear the chute:

- **Shut the engine off!**
- Wait 10 seconds to be sure the rotor blades have stopped rotating.
- Always use a clean-out tool, not your hands.

Self-propelling the Snowthrower

Lift the machine handle until the wheels are just off the ground and the scraper and rotor blades touch the ground, The machine will propel forward (Figure 25).

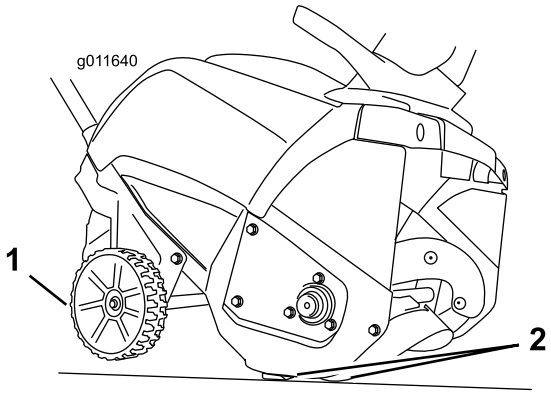

Figure 25

1. Wheels off the ground
2. Scraper and rotor blades in contract with the ground

Note: By slightly varying lifting force on the handle, you can control the forward speed of the machine. In heavy snow, push forward on the handle, if necessary, but let the machine work at its own pace. Do not lift the handle any more than necessary, because the scraper will lift off the ground and snow will escape behind the machine.

Preventing Freeze-up after Use

- Let the engine run for a few minutes to prevent moving parts from freezing. Stop the engine, wait for all moving parts to stop, and remove ice and snow from the machine.
- Clean off any snow and ice from the base of the chute.
- Rotate the discharge chute left and right to free it from any ice buildup.
- With the ignition key in the Off position, pull the recoil starter handle several times or connect the electrical cord to a power source and the machine and push the electric start button once (model 38282 only) to prevent the recoil starter and/or the electric starter from freezing up.
- In snowy and cold conditions, some controls and moving parts may freeze. Do not use excessive force when trying to operate frozen controls. If you have difficulty operating any control or part, start the engine and let it run for a few minutes.

Operating Tips

⚠ WARNING

The rotor blades can throw stones, toys, and other foreign objects and cause serious personal injury to the operator or to bystanders.

- **Keep the area to be cleared free of all objects that the rotor blades could pick up and throw.**
- **Keep all children and pets away from the area of operation.**
- Remove the snow as soon as possible after it falls.
- Overlap each swath to ensure complete snow removal.
- Discharge the snow downwind whenever possible.

Maintenance

Note: Determine the left and right sides of the machine from the normal operating position.

Recommended Maintenance Schedule(s)

Maintenance Service Interval	Maintenance Procedure
After the first hour	• Check the control cable and adjust it if necessary. • Check for loose fasteners and tighten them if necessary.
After the first 2 hours	• Change the engine oil.
Before each use or daily	• Check the engine oil level and add oil if necessary.
Yearly	• Check the control cable and adjust it if necessary. • Inspect the rotor blades and have an Authorized Service Dealer replace the rotor blades and scraper if necessary. • Change the engine oil. • Service the spark plug and replace it if necessary. • Check for loose fasteners and tighten them if necessary. • Have an Authorized Service Dealer inspect the drive belt and replace it if necessary.
Yearly or before storage	• Prepare the machine for storage.

Adjusting the Control Cable

Refer to Adjusting the Control Cable in Setup.

Inspecting the Rotor Blades

Service Interval: Yearly—Inspect the rotor blades and have an Authorized Service Dealer replace the rotor blades and scraper if necessary.

Before each session, inspect the rotor blades for wear. When a rotor blade edge has worn down to the wear indicator hole, have an Authorized Service Dealer replace the rotor blades and the scraper (Figure 26).

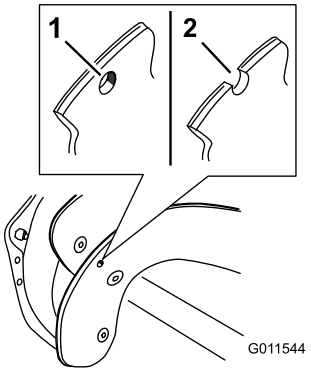

Figure 26

1. The wear indicator hole is intact; you do not need to replace the rotor blades.
2. The wear indicator hole is exposed; replace the rotor blades and scraper.
3. Scraper

Changing the Engine Oil

Service Interval: After the first 2 hours

Yearly

Run the engine a few minutes before changing the oil to warm it. Warm oil flows better and carries more contaminants.

1. Ensure that the fuel tank is not overfilled (refer to Figure 12) and that the fuel cap is securely in place.
2. Move the machine to a level surface.

3. Place an oil drain pan under the oil drain plug (Figure 11), remove the oil drain plug, and tip the machine backward (handle down) halfway to the ground to drain the used oil into the oil drain pan.

   Important: Do not tip the machine all the way back to the ground, or fuel may leak out of the machine.

4. After draining the used oil, return the machine to the operating position.
5. Install the oil drain plug and tighten it securely.
6. Clean around the oil fill cap (Figure 11).
7. Unscrew the oil fill cap and remove it.
8. **Slowly** pour oil into the oil fill hole. Wait 3 minutes, then check the oil level on the dipstick by wiping the dipstick clean and then inserting, **but not screwing in,** the oil fill cap into the hole.

   Note: To determine the proper oil level on the dipstick, refer to Figure 27.

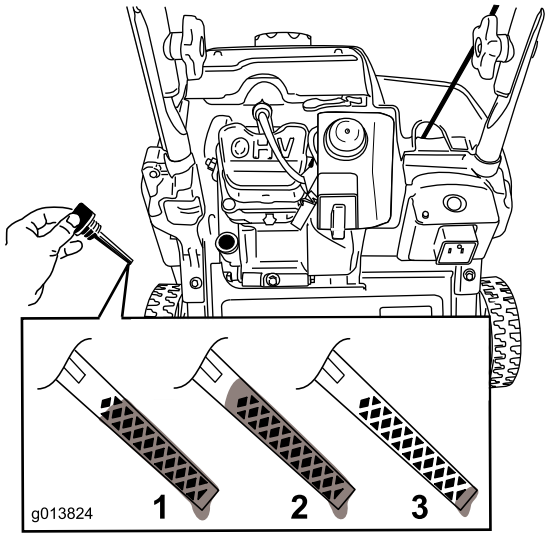

Figure 27

1. The oil level is at its maximum.
2. The oil level is too high—remove oil from the crankcase.
3. The oil level is too low—add oil to the crankcase.

Note: You may tip the machine forward (handle up) a little to make adding oil easier. Remember to return the machine to the operating position before checking the oil level.

Important: Do not tip the machine all the way forward onto its nose, or fuel may leak out of the machine.

Max fill: 12 oz. (0.35 l), type: automotive detergent oil with an API service classification of SJ, SL, or higher.

Use Figure 28 to select the best oil viscosity for the outdoor temperature range expected:

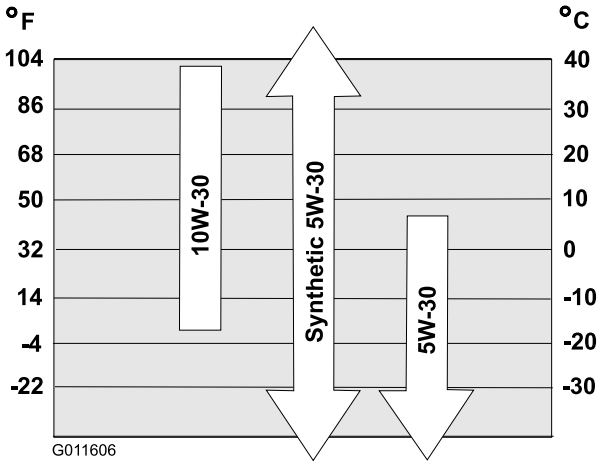

Figure 28

Note: Fill the engine crankcase with oil until the dipstick indicates that the engine oil level is correct as shown in Figure 27. If you overfill the engine with oil, remove the excess oil from the drain plug into an oil drain pan.

9. Screw the oil fill cap into the oil fill hole, and hand tighten it securely.
10. Wipe up any spilled oil.
11. Dispose of the used oil properly at a local recycling center.

Servicing the Spark Plug

Service Interval: Yearly—Service the spark plug and replace it if necessary.

Use a Toro spark plug (Part No. 119-1961).

1. Stop the engine and wait for all moving parts to stop.
2. Disconnect the wire from the spark plug (Figure 11).
3. Clean around the spark plug.
4. Remove the spark plug from the cylinder head.

   Important: Replace a cracked, fouled, or dirty spark plug. Do not clean the electrodes because grit entering the cylinder can damage the engine.

5. Set the gap on the plug to 0.030 inch (0.76 mm) (Figure 29).

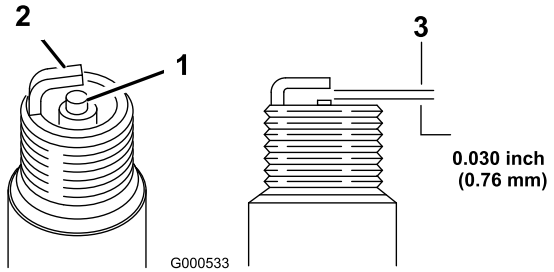

Figure 29

1. Center electrode insulator
2. Side electrode
3. Air gap (not to scale)

6. Install the spark plug and torque it to 20–22 ft-lb (27–30 N-m).
7. Connect the wire to the spark plug.

Replacing the Drive Belt

If drive belt becomes worn, oil-soaked, excessively cracked, frayed, or otherwise damaged, replace the belt.

1. Remove the 4 bolts that hold the drive belt cover (Figure 30) in place.

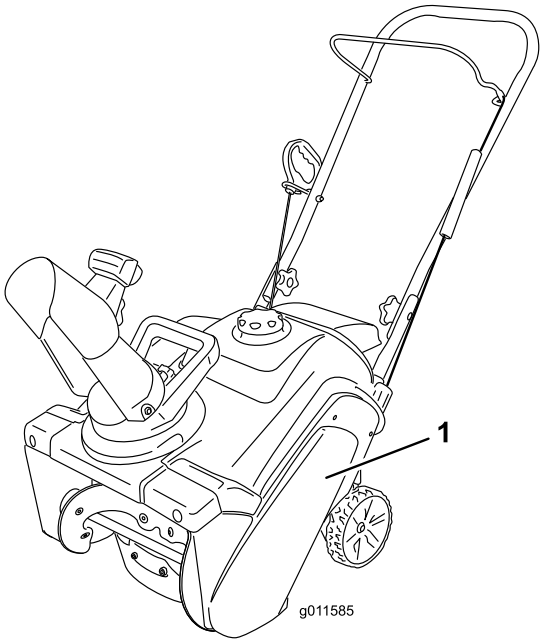

Figure 30

1. Drive belt cover

Note: The lower front corner of the drive belt cover is fastened down with a smaller bolt, a washer, and a locknut.

2. Remove the belt from the rotor pulley.

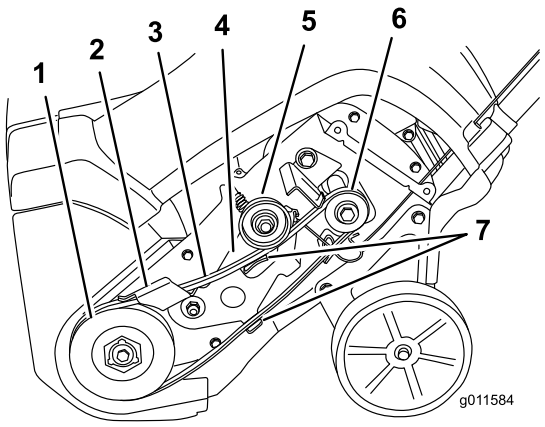

Figure 31

1. Rotor pulley
2. Idler arm brake
3. Drive belt
4. Idler arm
5. Idler pulley
6. Engine pulley
7. Tabs on the idler arm

3. Press down on the idler arm and remove the belt from between the tab on the idler arm brake and the rotor pulley.

Note: The engine pulley belt guide is very close to the pulley, and the belt may not fit through the gap.

4. Twist the belt out in front of the belt guide so that the belt is wedged between the belt guide and the engine pulley.
5. Insert a screwdriver into the hole in the belt guide as shown in Figure 32, and flex the belt guide toward the rotor pulley enough to pull the belt through the gap.

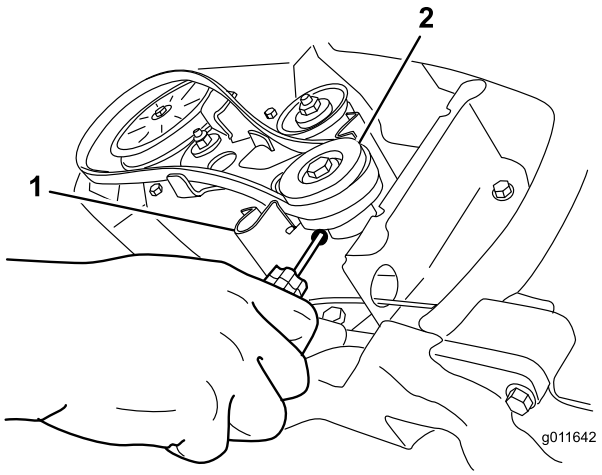

Figure 32

1. Belt guide
2. Engine pulley

Note: Take care not to distort or damage the belt guide.

6. To install the new drive belt, reverse the steps above.

Important: Ensure that you install the drive belt so that it sits above the two tabs on the idler arm and below the idler arm brake (Figure 31).

7. Install the drive belt cover with the fasteners that you removed in step 1.

Storage

Storing the Machine

⚠ WARNING

- **Gasoline fumes are highly flammable, explosive, and dangerous if inhaled. If you store the product in an area with an open flame, the gasoline fumes may ignite and cause an explosion.**
- **Do not store the machine in a house (living area), basement, or any other area where ignition sources may be present, such as hot water and space heaters, clothes dryers, furnaces, and other like appliances.**
- **Do not tip the machine either forward or backward with fuel in the fuel tank; otherwise, fuel may leak out of the machine.**
- **Do not store the machine with its handle tipped down onto the ground, because oil will leak into the engine cylinder and onto the ground, and the machine will not start or run.**

1. On the last refueling of the season, add fuel stabilizer to fresh fuel as directed by the engine manufacturer.
2. Run the engine for 10 minutes to distribute the conditioned fuel through the fuel system.
3. While the engine is still warm, change the engine oil. Refer to Changing the Engine Oil.
4. Drain the fuel from the tank and carburetor by performing the following steps:
   A. Loosen the fuel tank cap.
   B. Unscrew, but do not remove, the small screw on the side of the carburetor fuel bowl (Figure 33) until the fuel begins to drain from the carburetor. Drain the fuel into an approved fuel container.

      Important: Do not remove the carburetor bowl bolt on the bottom of the carburetor.

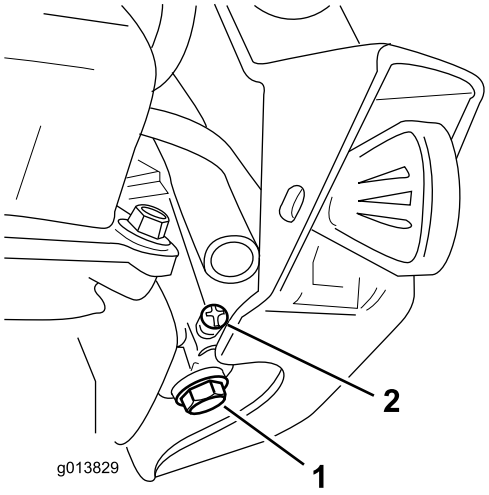

Figure 33

1. Carburetor bowl bolt—do not remove
2. Small screw on carburetor

   C. Wait for a few minutes until the fuel has drained, then install the fuel cap and tighten the small screw on the carburetor.
5. Dispose of unused fuel properly. Recycle it according to local codes, or use it in your automobile.
6. Remove the spark plug.
7. Squirt 2 teaspoons of oil into the spark plug hole.
8. Install the spark plug by hand and then torque it to 20–22 ft-lb (27–30 N-m).
9. With the ignition key in the Off position, pull the recoil starter slowly to distribute the oil on the inside of the cylinder.
10. Disconnect the ignition key from the lanyard and store the ignition key in a safe place.
11. Clean the machine.
12. Touch up chipped surfaces with paint available from an Authorized Service Dealer. Sand affected areas before painting, and use a rust preventative to prevent the metal parts from rusting.
13. Tighten any loose fasteners. Repair or replace any damaged parts.
14. Cover the machine and store it in a clean, dry place out of the reach of children. Allow the engine to cool before storing it in any enclosure.

Notes:

Federal Emission Control Warranty Statement

A Two-Year Limited Warranty

Your Warranty Rights and Obligations

The U.S. Environmental Protection Agency (EPA), The Toro Company, and its affiliate, Toro Warranty Company, are pleased to explain the emission control system warranty on your 2009 and later utility/lawn/garden equipment engine. 2009 and later model year utility/lawn/garden equipment engines must be designed, built and equipped, at the time of sale, to meet the U.S. EPA regulations for small non-road engines. The equipment engine must be free from defects in materials and workmanship, which cause it to fail to conform with U.S. EPA standards, for the first two years of engine use from the date of sale to the ultimate purchaser. The Toro Company and its affiliate, Toro Warranty Company, warrant the emission control system on your utility/lawn/garden equipment engine for the period of time listed above, provided there has been no abuse, neglect, or improper maintenance of your utility/lawn/garden equipment engine.

Your emission control system may include parts such as the carburetor or fuel injection system, the ignition system, and catalytic converter. Also included may be fuel lines, fuel line fasteners, connectors, and other emission-related assemblies.

Where a warrantable condition exists, The Toro Company and its affiliate, Toro Warranty Company, promise to repair your engine at no cost to you, including diagnosis, parts, and labor.

Manufacturer's Warranty Coverage

The Toro Company and its affiliate, Toro Warranty Company, pursuant to an agreement between them, jointly warrant the 2009 and later utility/lawn/garden equipment engines for two years from the date of delivery. If any emission-related part on your engine is defective in materials or workmanship, we will repair or replace the part, free of charge.

Owner Responsibilities

As the engine owner, you are responsible for the performance of the required maintenance listed in your *Operator's Manual*. We recommend that you retain all receipts covering maintenance on your equipment, but we cannot deny warranty solely for the lack of receipts or for your failure to ensure the performance of all scheduled maintenance.

Any replacement part or service that is equivalent in performance and durability may be used in non-warranty maintenance or repairs, and shall not reduce our warranty obligation.

As the engine owner, you should be aware that we may deny you warranty coverage if your engine or a part has failed due to abuse, neglect, improper maintenance, or unapproved modifications or parts.

You are responsible for presenting your equipment engine to an Authorized Service Dealer as soon as a problem exists. The warranty repairs should be completed in a reasonable amount of time, not to exceed thirty (30) days.

If you have any questions regarding your warranty rights and responsibilities, contact us at:

Customer Care Department, Consumer Division
Toro Warranty Company
8111 Lyndale Avenue South
Bloomington, MN 55420-1196
Toll free at 800–348–2424 (U.S. customers)
Toll free at 800–544–5364 (Canadian customers)

Warranted Parts

The warranty period begins on the date the engine or equipment is delivered to a retail purchaser. The Toro Company and its affiliate, Toro Warranty Company, jointly warrant to the initial owner and each subsequent purchaser that the engine is free from defects in materials and workmanship, which cause the engine to fail to conform with applicable regulations, for a period of two years.

Failures caused by abuse, neglect, or improper maintenance are not covered. The use of add-on or modified parts can be grounds for disallowing a warranty claim. We are not liable to cover failures of warranted parts caused by the use of add-on or modified parts. We are liable for damages to other engine components caused by the failure of a warranted part still under warranty. The owner is responsible for the performance of the required maintenance, as defined in the *Operator's Manual*.

Any warranted part which is not scheduled for replacement as required maintenance, or which is scheduled only for regular inspection to the effect of "repair or replace as necessary" shall be warranted for the warranty period. Any warranted part which is scheduled for replacement as required maintenance shall be warranted for the period of time up to the first scheduled replacement point for that part. Coverage under this warranty extends only to the parts listed below (the emissions system parts) to the extent that these parts were present on the engine when purchased.

- Fuel Metering System
  - — Cold start enrichment system including the choke mechanism or priming system
  - — Fuel pump
  - — Carburetor and internal parts
- Air Induction System
  - — Air cleaner
  - — Intake manifold
  - — Controlled hot air intake system
- Ignition System
  - — Spark plug(s)
  - — Ignition coils and electronics
  - — Advance/retard mechanisms
- Muffler
- Miscellaneous Items Used in the Above Systems
  - — Vacuum, temperature, and time-sensitive valves and switches
  - — Hoses, connectors, and assemblies of same

Instructions for Obtaining Warranty Service

If you think that your Toro Product contains a defect in materials or workmanship, follow this procedure:

1. Contact any Authorized Toro Service Dealer to arrange service at their dealership. To locate a dealer convenient to you, refer to the Yellow Pages of your telephone directory (look under "Lawn Mowers") or access our website at www.Toro.com. You may also call the numbers listed above to use the 24-hour Toro Dealer locator system.
2. Bring the product and your proof of purchase (sales receipt) to the Service Dealer.

The owner shall not be charged for diagnostic labor which leads to the determination that a warranted part is defective, if the diagnostic work is performed at a warranty station.

General Conditions

Neither The Toro Company nor Toro Warranty Company is liable for indirect, incidental, or consequential damages in connection with the use of the Toro Products covered by these warranties, including any cost or expense of providing substitute equipment or service during reasonable periods of malfunction or non-use pending completion of repairs under these warranties.

All implied warranties of merchantability (that the product is fit for ordinary use) and fitness for use (that the product is fit for a particular purpose) are limited to the duration of the express warranty.

Some states do not allow exclusions of incidental or consequential damages, so the above exclusions may not apply to you.

This warranty gives you specific legal rights, and you may also have other rights which vary from state to state.

The Toro Total Coverage Guarantee

A Two-Year Full Warranty (45 Day Limited Warranty for Commercial Use)

Power Clear 180
Single-Stage Snowthrowers

Conditions and Products Covered

The Toro Company and its affiliate, Toro Warranty Company, pursuant to an agreement between them, jointly promise to repair the Toro Product listed below if used for residential purposes*, if defective in materials or workmanship or if it stops functioning due to the failure of a component for the period listed below.

This warranty covers the cost of parts and labor, but you must pay transportation costs.

The following time periods apply from the date of purchase:

Products	Warranty Period
Power clear 180 Snowthrowers and Attachments	2 years

Limited Warranty for Commercial Use

Gas-powered Toro Products used for commercial, institutional, or rental use, are warranted for 45 days against defects in materials or workmanship. Components failing due to normal wear are not covered by this warranty.

Instructions for Obtaining Warranty Service

If you think that your Toro Product contains a defect in materials or workmanship, follow this procedure:

1. Contact any Authorized Toro Service Dealer to arrange service at their dealership. To locate a dealer convenient to you, refer to the *Yellow Pages* of your telephone directory (look under “Lawn Mowers”) or access our web site at www.Toro.com. You may also call the numbers listed in item #3 to use the 24-hour Toro Dealer locator system.
2. Bring the product and your proof of purchase (sales receipt) to the Service Dealer. The dealer will diagnose the problem and determine if it is covered under warranty.
3. If for any reason you are dissatisfied with the Service Dealer’s analysis or with the assistance provided, contact us at:

   Customer Care Department, Consumer Division
   The Toro Company
   8111 Lyndale Avenue South
   Bloomington, MN 55420-1196
   Toll free at 866-336-5205 (U.S. customers)
   Toll free at 866-854–9033 (Canadian customers)

Owner Responsibilities

You must maintain your Toro Product by following the maintenance procedures described in the *Operator's Manual*. Such routine maintenance, whether performed by a dealer or by you, is at your expense.

Items and Conditions Not Covered

There is no other express warranty except for special emission system coverage and engine warranty coverage on some products. This express warranty does not cover the following:

- Cost of regular maintenance or wear parts, such as rotor blades (paddles), scraper blades, belts, fuel, lubricants, oil changes, spark plugs, cable/linkage or brake adjustments
- Any product or part which has been altered or misused and requires replacement or repair due to accidents or lack of proper maintenance
- Repairs necessary due to failure to use fresh fuel (less than one month old), or failure to properly prepare the unit prior to any period of non-use over one month
- Pickup and delivery charges
- Operational misuse, neglect, or accidents
- Repairs or attempted repairs by anyone other than an Authorized Toro Service Dealer
- Repairs or adjustments to correct starting difficulties due to the following:
  - failure to follow proper maintenance procedures
  - snowthrower auger/paddles striking an object
  - contaminants in the fuel system
  - improper fuel or fuel/oil mixture (consult your *Operator's Manual* if in doubt)
  - failure to drain the fuel system prior to any period of non-use over one month

If you are having difficulty starting your unit, please check the *Operator's Manual* to ensure that you are using the correct starting procedures. This can save an unnecessary visit to a Service Dealer.

General Conditions

All repairs covered by these warranties must be performed by an Authorized Toro Service Dealer using Toro approved replacement parts. Repair by an Authorized Toro Service Dealer is your sole remedy under this warranty.

Neither The Toro Company nor Toro Warranty Company is liable for indirect, incidental, or consequential damages in connection with the use of the Toro Products covered by these warranties, including any cost or expense of providing substitute equipment or service during reasonable periods of malfunction or non-use pending completion of repairs under these warranties.

Some states do not allow exclusions of incidental or consequential damages, so the above exclusions may not apply to you.

This warranty gives you specific legal rights, and you may also have other rights which vary from state to state.

Countries Other than the United States or Canada

Customers who have purchased Toro products exported from the United States or Canada should contact their Toro Distributor (Dealer) to obtain guarantee policies for your country, province, or state. If for any reason you are dissatisfied with your Distributor's service or have difficulty obtaining guarantee information, contact the Toro importer. If all other remedies fail, you may contact us at Toro Warranty Company.

*Residential purposes means use of the product on the same lot as your home. Use at more than one location, or institutional or rental use, is considered commercial use, and the commercial use warranty would apply.