FORM NO. 3317–179

TORO®

MODEL NO. 21010–5900001 & UP

PARTS CATALOG

# 43cm RECYCLER® MOWER

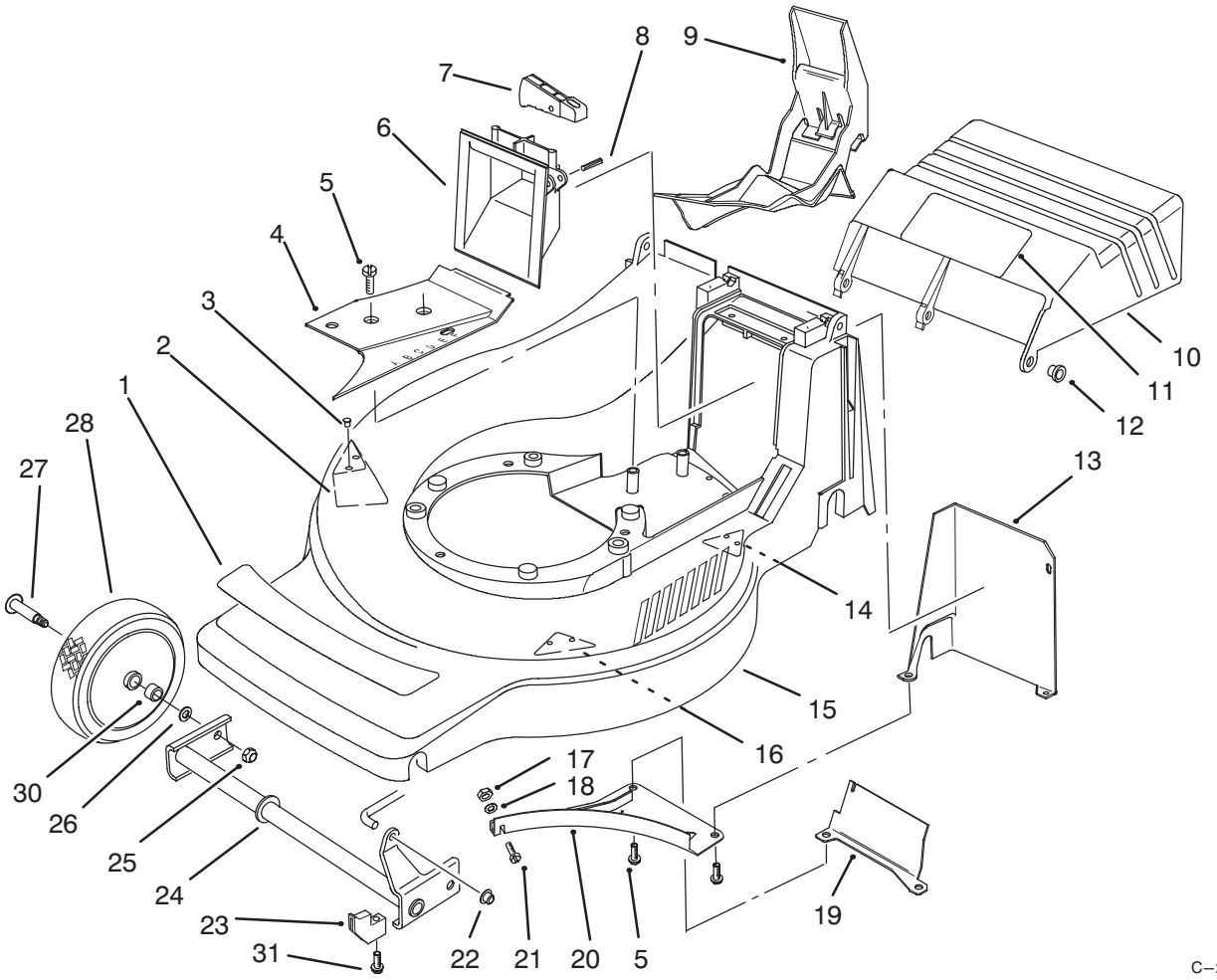


## HOUSING ASSEMBLY

| Ref. No. | Part No. | Description | No. Used |
|---|---|---|---|
| 1 | 93–4351 | Decal – Deck | 1 |
| 2 | 93–3730 | Kicker – Front Right | 1 |
| 3 | 32144–111 | Screw – Phillips Head | 6 |
| 4 | 93–3782 | Cover – Belt | 1 |
| 5 | 93–4095 | Screw | 5 |
| 6 | 71–7870 | Grip – Lower | 1 |
| 7 | 71–7930 | Trigger – H.O.C. | 1 |
| 8 | 3284–5 | Pin – Groove | 1 |
| 9 | 93–3790 | Plug – Mulch | 1 |
| 10 | 93–4055 | Door – Discharge | 1 |
| 11 | 93–4105 | Decal | 1 |
| 12 | 93–3794 | Bushing – Door | 1 |
| 13 | 93–3781 | Cover – Shield | 1 |
| 14 | 93–3750 | Kicker – Rear Left | 1 |
| 15 | 16–8919 | Housing – Deck (Incl. Ref.# 2, 3, 14 & 16) | 1 |

| Ref. No. | Part No. | Description | No. Used |
|---|---|---|---|
| 16 | 93–3740 | Kicker – Front Left | 1 |
| 17 | 3296–2 | Nut | 1 |
| 18 | 3256–21 | Washer | 1 |
| 19 | 93–4110 | Baffle | 1 |
| 20 | 93–3720 | Baffle – Mulch | 1 |
| 21 | 3250–13 | Screw | 1 |
| 22 | 32112–11 | Nut – Push | 1 |
| 23 | 93–4064 | Retainer – Axle | 2 |
| 24 | 93–4080 | Axle – Front | 1 |
| 25 | 3296–6 | Nut – Lock | 2 |
| 26 | 40–1940 | Washer | 2 |
| 27 | 27–6231 | Bolt – Wheel | 2 |
| 28 | 93–4081 | Wheel & Tire Assembly 7” | 2 |
| 30 | 93–7024 | Bushing | 4 |
| 31 | 93–3793 | Screw – Retainer | 2 |

Copyright 1995 The Toro Company
All Rights Reserved

TPS

3317–179

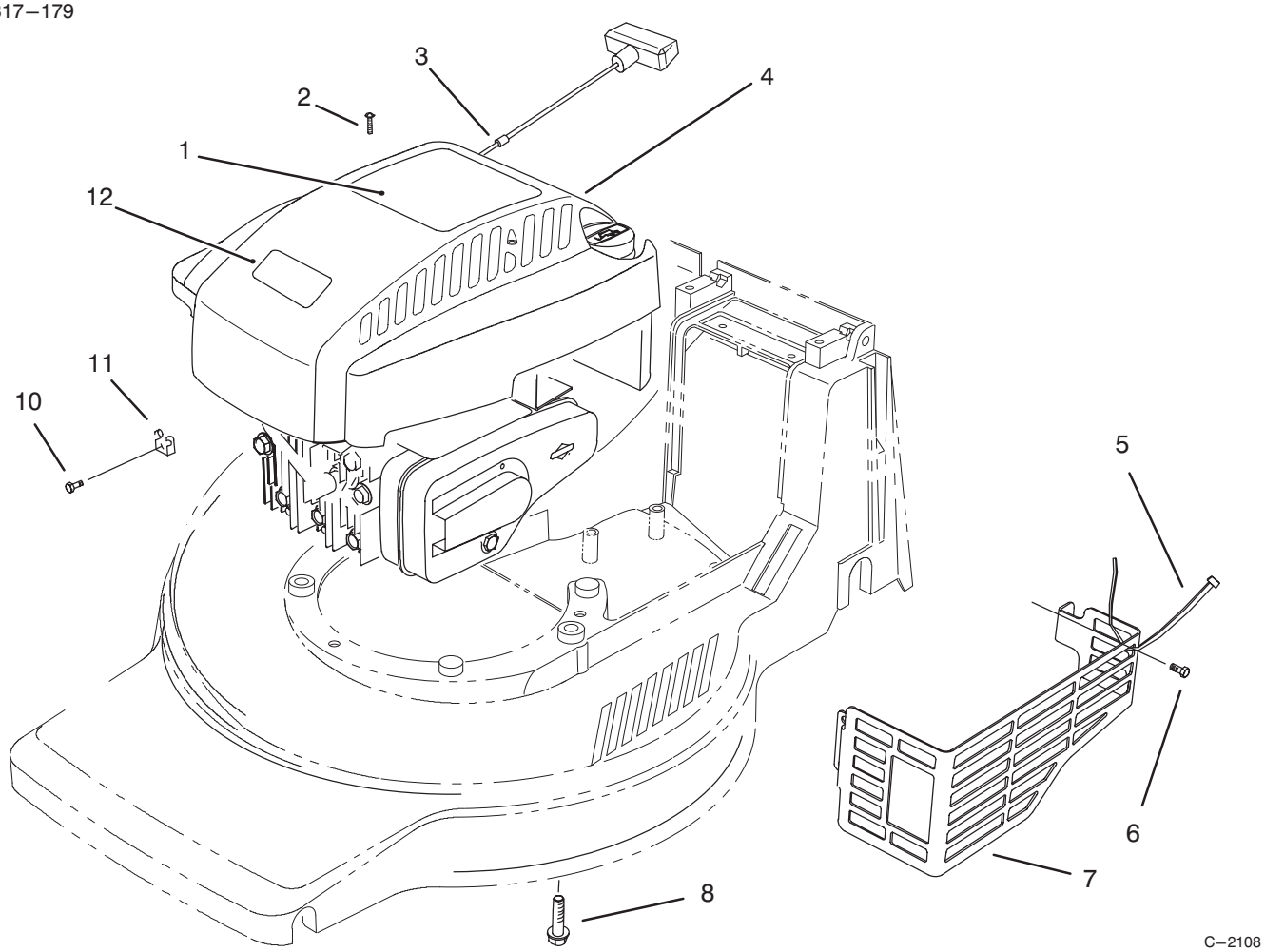


# ENGINE ASSEMBLY

| Ref. No. | Part No. | Description | No. Used |
|---|---|---|---|
| 1 | 93–4352 | Decal – Shroud | 1 |
| 2 | 32144–121 | Screw – Mounting | 2 |
| 3 | 2210–316 | Stop – Rope | 1 |
| 4 | 93–0243 | Shroud – Engine | 1 |
| 5 | 3290–378 | Tie – Cable | 1 |
| 6 | 32144–73 | Screw – Hex Washer Hd. Thread Forming | 3 |

| Ref. No. | Part No. | Description | No. Used |
|---|---|---|---|
| 7 | 82–8550 | Shield – Muffler | 1 |
| 8 | 32144–102 | Screw – Engine | 3 |
| 10 | 93–8470 | Screw – Clamp | 1 |
| 11 | 2210–249 | Clamp – Casing | 1 |
| 12 | 92–2289 | Plate – Logo Toro | 1 |

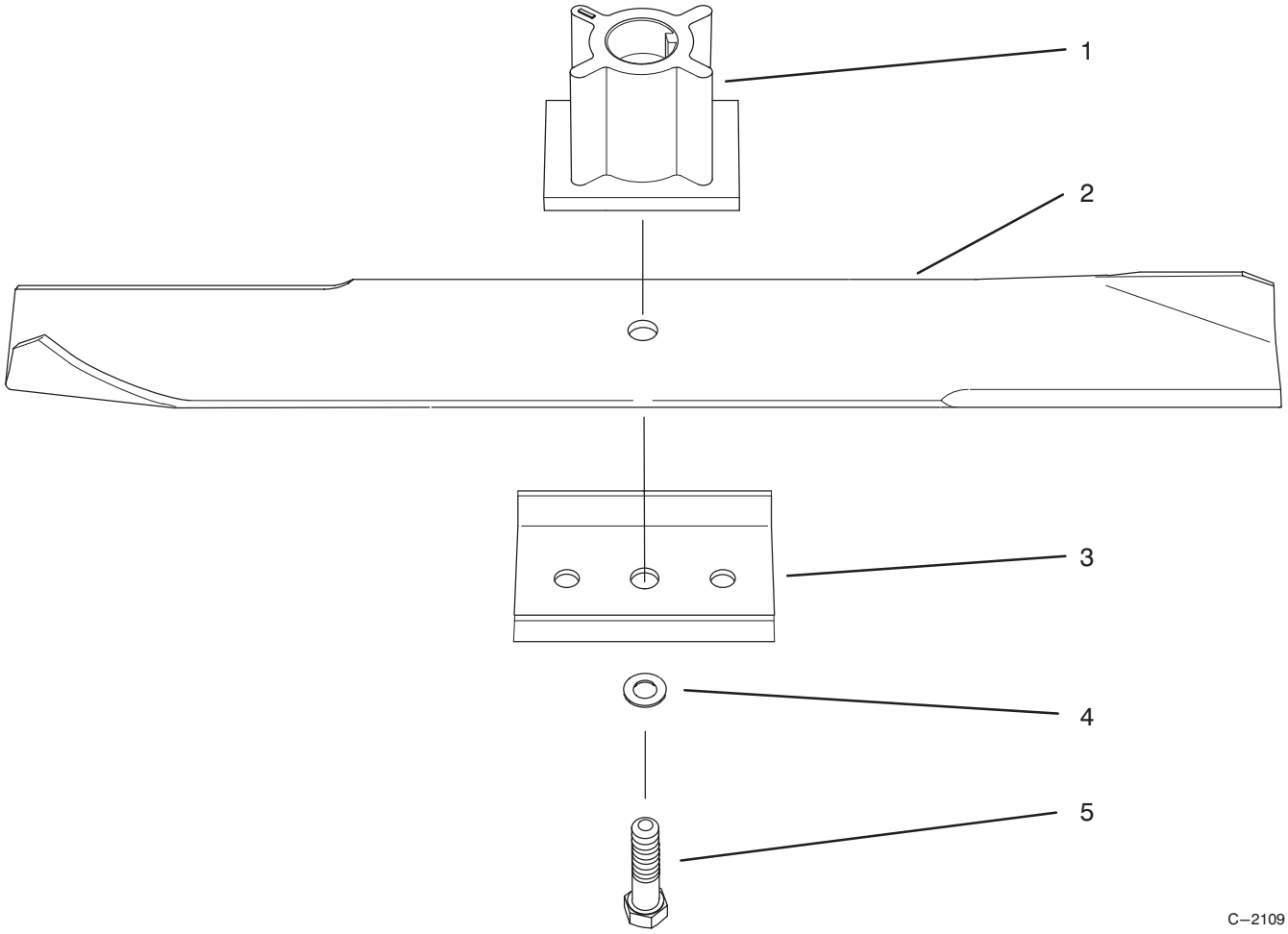


C–2109

# BLADE ASSEMBLY

| Ref. No. | Part No. | Description | No. Used |
|---|---|---|---|
| 1 | 93–4091 | Retainer – Blade | 1 |
| 2 | 93–3760 | Blade – 43cm | 1 |
| 3 | 93–8731 | Stiffener – Blade | 1 |
| 4 | 3253–22 | Washer – Lock | 1 |
| 5 | 26–0672 | Bolt – Blade | 1 |

3317–179

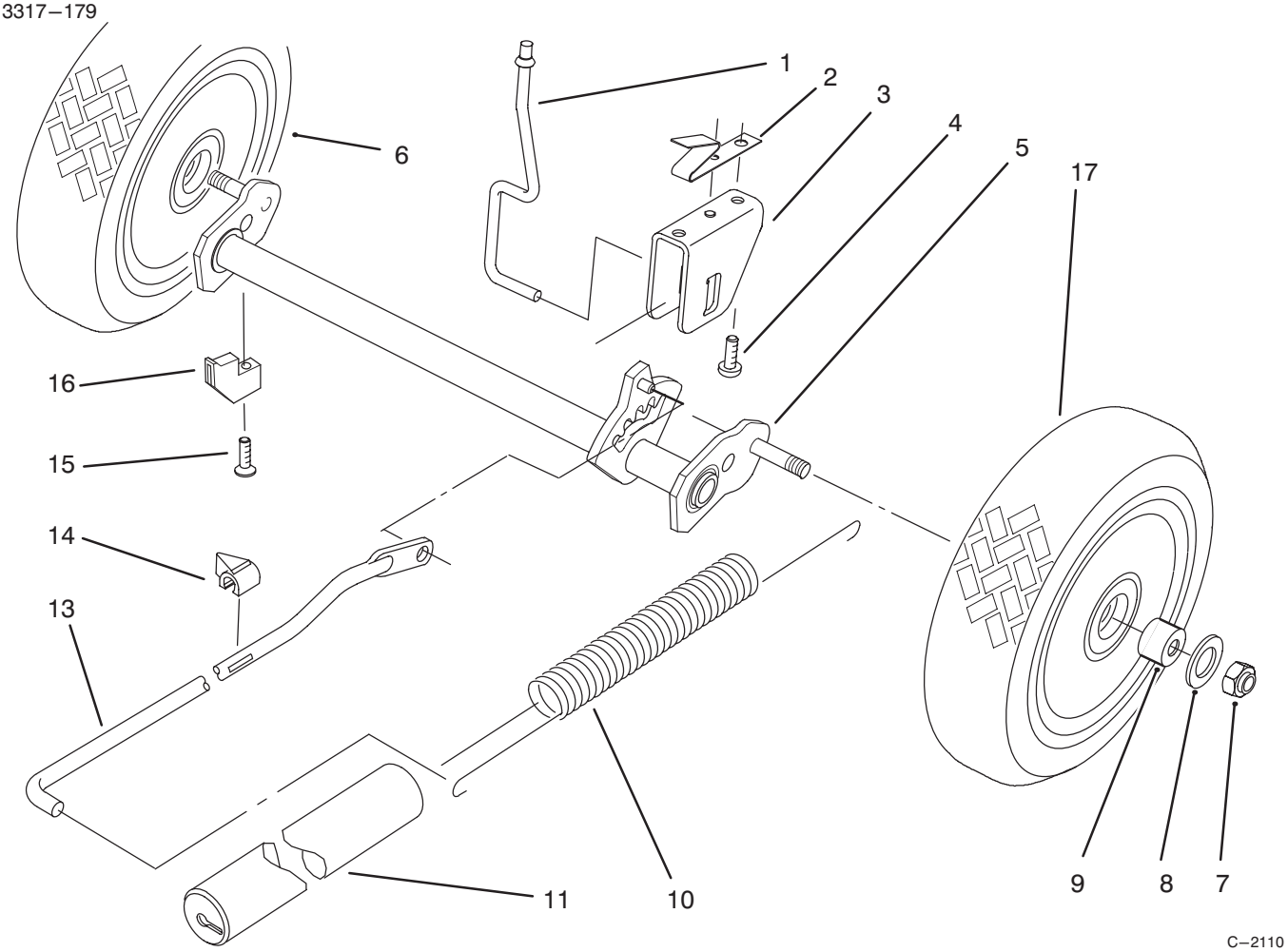


# REAR AXLE ASSEMBLY

| Ref. No. | Part No. | Description | No. Used |
|---|---|---|---|
| 1 | 93–4061 | Rod – Trigger | 1 |
| 2 | 93–4062 | Spring – Trigger Ret. | 1 |
| 3 | 93–4066 | Saddle – H.O.C. | 1 |
| 4 | 93–4095 | Screw | 2 |
| 5 | 93–4079 | Axle – Rear | 1 |
| 6 | 93–8492 | Wheel & Tire Assembly | 1 |
| 7 | 93–4098 | Nut – Lock | 2 |
| 8 | 93–4097 | Washer – Wheel | 2 |
| 9 | 93–7023 | Bushing | 4 |

| Ref. No. | Part No. | Description | No. Used |
|---|---|---|---|
| 10 | 71–7740 | Spring – Counterbalance | 1 |
| 11 | 71–8450 | Cover – Spring | 1 |
| 13 | 93–4065 | Rod – Link | 1 |
| 14 | 71–7980 | Indicator – H.O.C. | 1 |
| 15 | 93–3793 | Screw – Retainer | 2 |
| 16 | 93–4064 | Retainer – Axle | 2 |
| 17 | 93–9836 | Wheel & Tire Assembly ”Smart Wheel” | 1 |

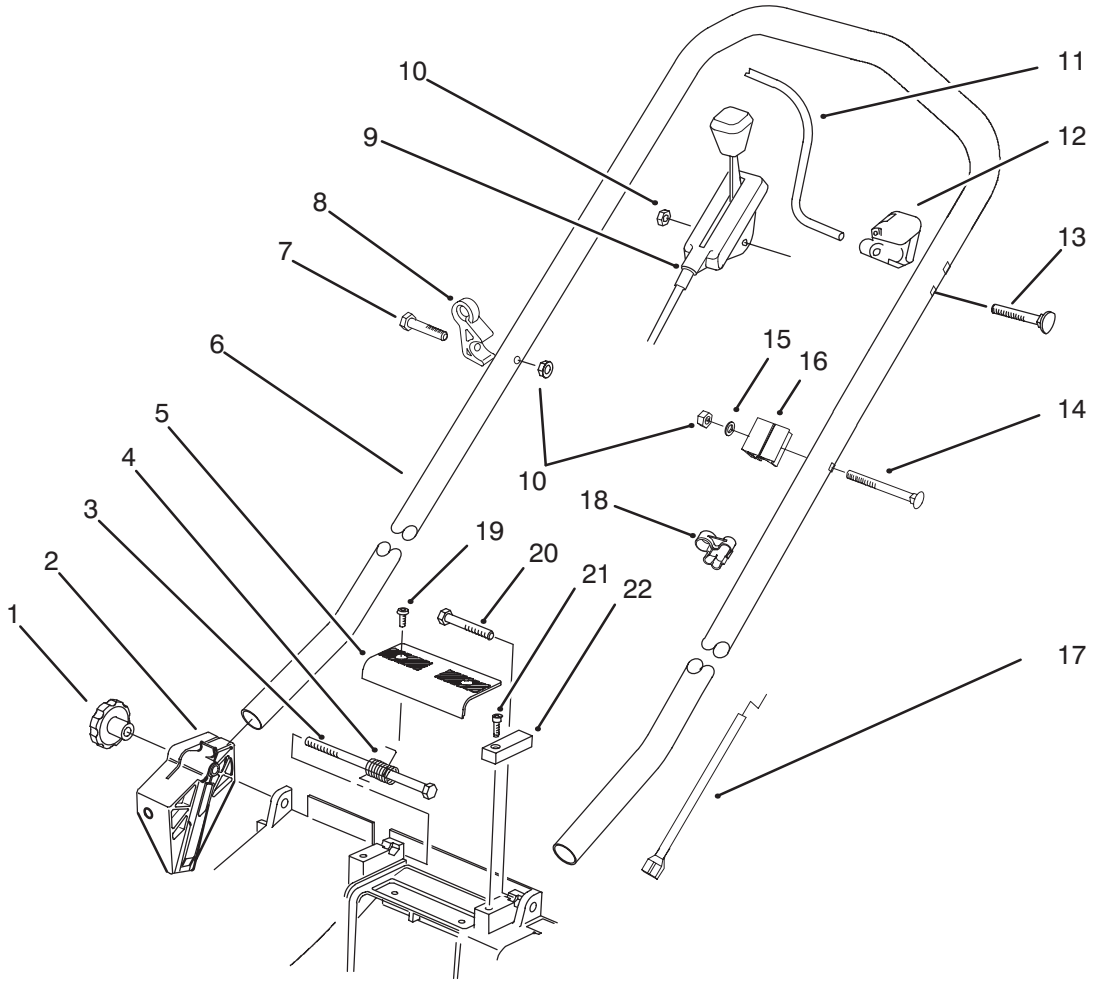


C–2111

# HANDLE ASSEMBLY

| Ref. No. | Part No. | Description | No. Used |
|---|---|---|---|
| 1 | 19–4050 | Knob | 2 |
| 2 | 93–4082 | Mount – Handle R.H. | 1 |
| * | 93–4083 | Mount – Handle L.H. | 1 |
| 3 | 93–4058 | Screw | 1 |
| 4 | 93–4057 | Spring | 1 |
| 5 | 71–7860 | Grip – Upper | 1 |
| 6 | 93–4089 | Handle | 1 |
| 7 | 321–52 | Screw | 1 |
| 8 | 93–3772 | Guide – Rope | 1 |
| 9 | 93–1118 | Control – Throttle | 1 |
| 10 | 3296–73 | Nut – Lock | 3 |
| 11 | 93–0336 | Bail – Control | 1 |

| Ref. No. | Part No. | Description | No. Used |
|---|---|---|---|
| 12 | 93–5412 | Stop – Pivot | 1 |
| 13 | 92–2266 | Screw – Handle | 1 |
| 14 | 92–2270 | Screw – Handle | 1 |
| 15 | 3256–1 | Washer – Flat | 1 |
| 16 | 46–6980 | Support – Cable | 1 |
| 17 | 93–1116 | Cable – Brake | 1 |
| 18 | 93–4084 | Clamp – Cable | 2 |
| 19 | 32144–97 | Screw | 2 |
| 20 | 93–4060 | Screw | 1 |
| 21 | 93–4094 | Screw – Hinge, Cap | 2 |
| 22 | 93–4056 | Cap | 2 |

*Not Illustrated

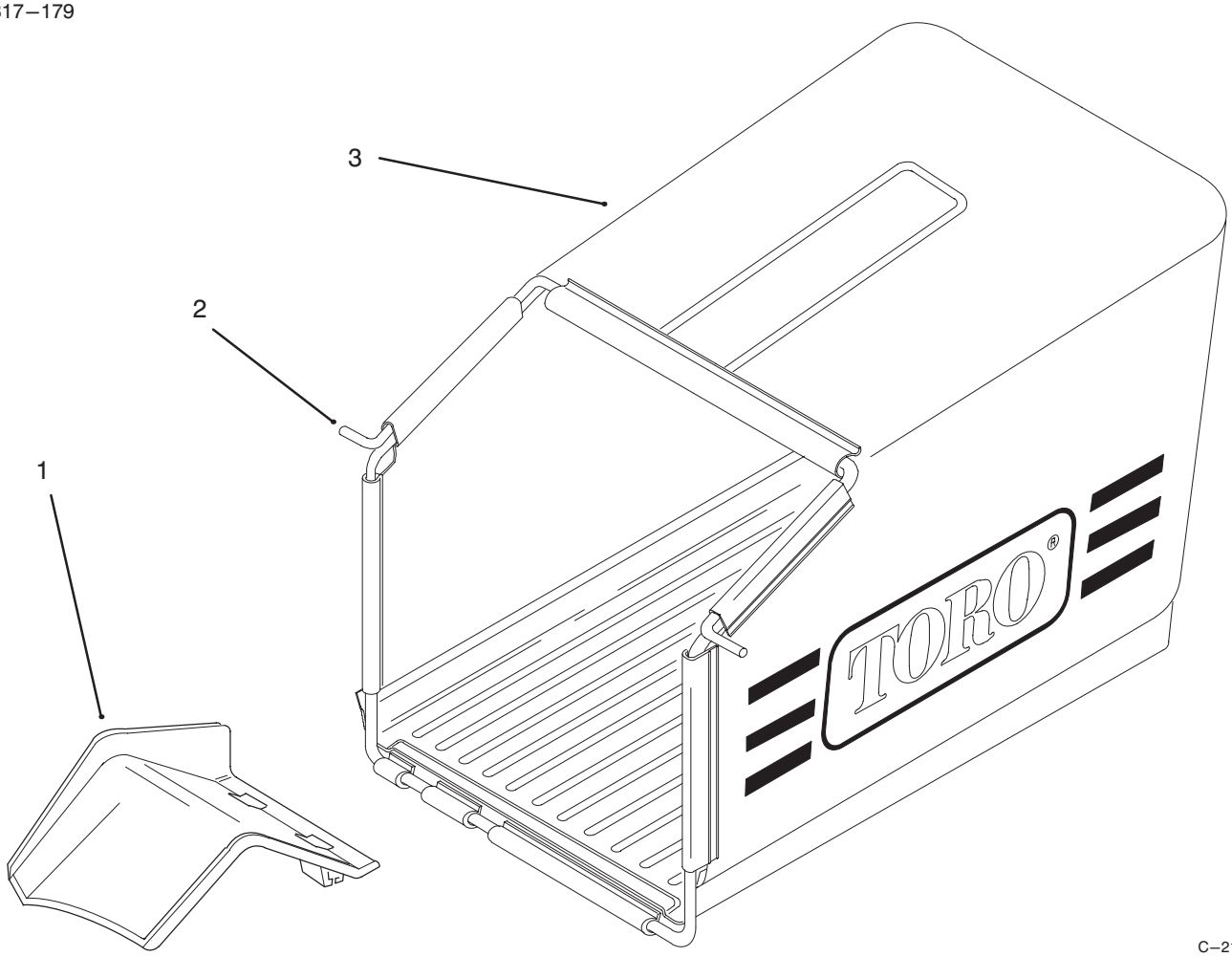


C–2112

# GRASS BAG ASSEMBLY

| Ref. No. | Part No. | Description | No. Used |
|---|---|---|---|
| 1 | 93–4087 | Grass Bag Remover | 1 |
| 2 | 93–4085 | Frame – Bag | 1 |

| Ref. No. | Part No. | Description | No. Used |
|---|---|---|---|
| 3 | 93–4086 | Bag – Grass | 1 |

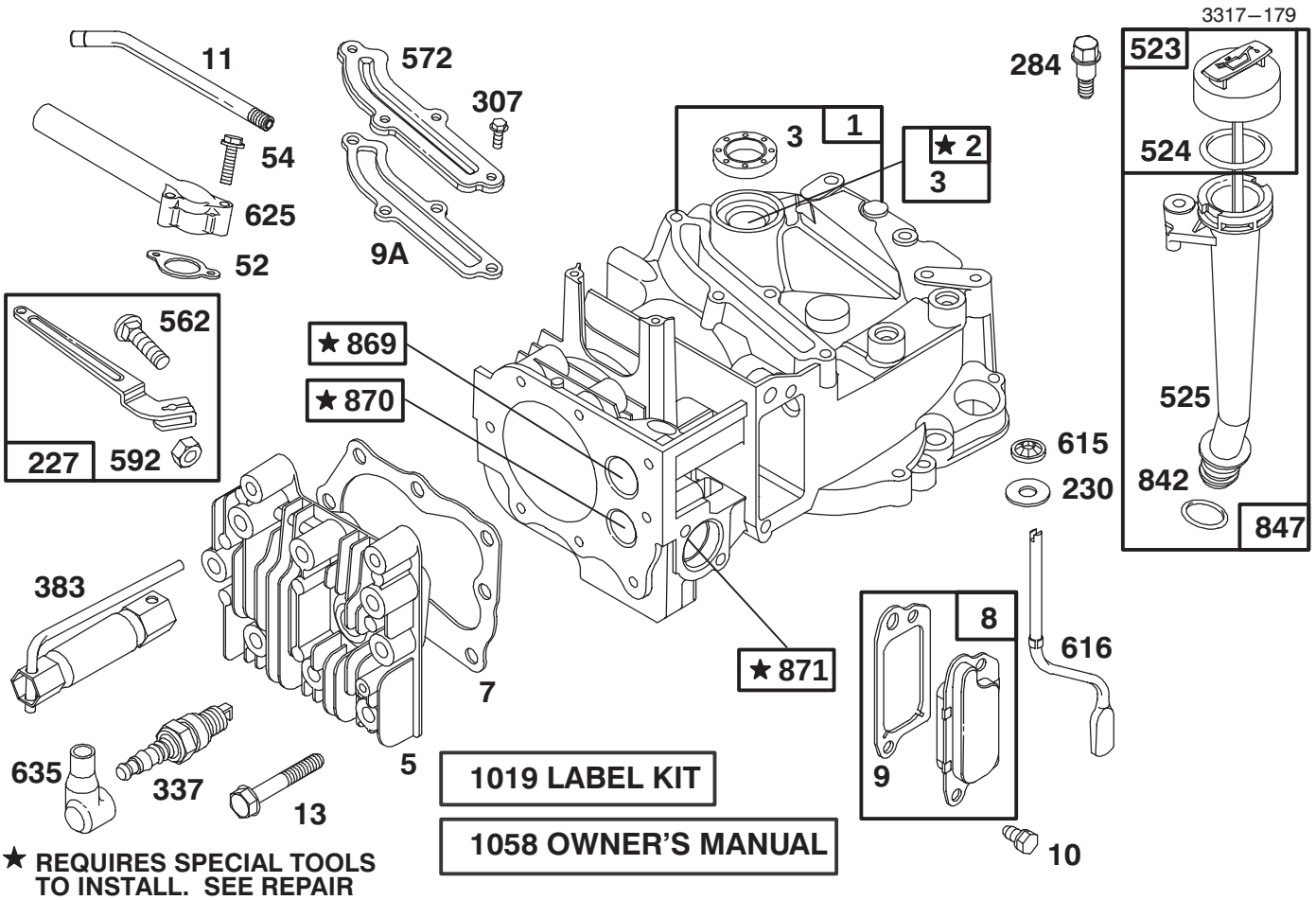


★ REQUIRES SPECIAL TOOLS TO INSTALL. SEE REPAIR INSTRUCTION MANUAL.

Assemblies include all parts shown in frames.

# ENGINE BRIGGS & STRATTON MODEL 12E802–0620–01

| Ref. No. | Part No. | Description | No. Used |
|---|---|---|---|
| 1 | 493260 | Cylinder Assembly | 1 |
| 2 | 293708 | Bushing – Cylinder | 1 |
| ★3 | 299819 | Seal – Oil | 1 |
| 5 | 214349 | Head – Cylinder | 1 |
| ★7 | 272916 | Gasket – Cylinder Head | 1 |
| 8 | 495786 | Breather Assembly | 1 |
| ★9 | 272481 | Gasket – Valve Cover | 1 |
| ★9A | 272238 | Gasket – Baffle Plate | 1 |
| 10 | 94650 | Screw – Breather Mtg. | 1 |
| 11 | 231933 | Tube – Breather | 1 |
| 13 | 94547 | Screw – Cylinder Head | 1 |
| ★52 | 272199 | Gasket – Intake Elbow | 1 |
| 54 | 94526 | Screw – Intake Elbow Mtg. | 1 |
| 227 | 492349 | Lever Assembly – Gov. | 1 |
| 230 | 67072 | Washer – Gov. Crank | 1 |
| 284 | 94511 | Screw – Hex. Head | 1 |
| 337 | 802592 | Plug – Spark | 1 |
| 383 | 89838 | Wrench – Spark Plug | 1 |
| 523 | 495264 | Cap With Dipstick – Oil Filler | 1 |

| Ref. No. | Part No. | Description | No. Used |
|---|---|---|---|
| ★524 | 280393 | Seal – Filler Tube | 1 |
| 525 | 495265 | Tube – Oil Filler | 1 |
| 562 | 92613 | Bolt – Governor Lever | 1 |
| 572 | 224328 | Baffle – Cylinder | 1 |
| 592 | 231082 | Nut – Hex. | 1 |
| 615 | 94474 | Fastener | 1 |
| 616 | 262578 | Crank – Governor | 1 |
| 625 | 281085 | Tube – Fuel Intake | 1 |
| 635 | 66538 | Elbow – Spark Plug | 1 |
| ★842 | 280966 | Seal – O-Ring | 1 |
| 847 | 495263 | Oil Fill Tube and Dipstick Assy. | 1 |
| 869 | 213512 | Seat – Intake Valve | 1 |
| 870 | 213513 | Seat – Exhaust Valve | 1 |
| 871 | 262001 | Guide – Exhaust Valve<br>**Note:** 63709 Guide – Intake Valve | 1 |
| 1019 | 494256 | Label Kit | 1 |
| 1058 | 272262 | Owner's Manual | 1 |

★ Included in Gasket Set–Part No. 497316.

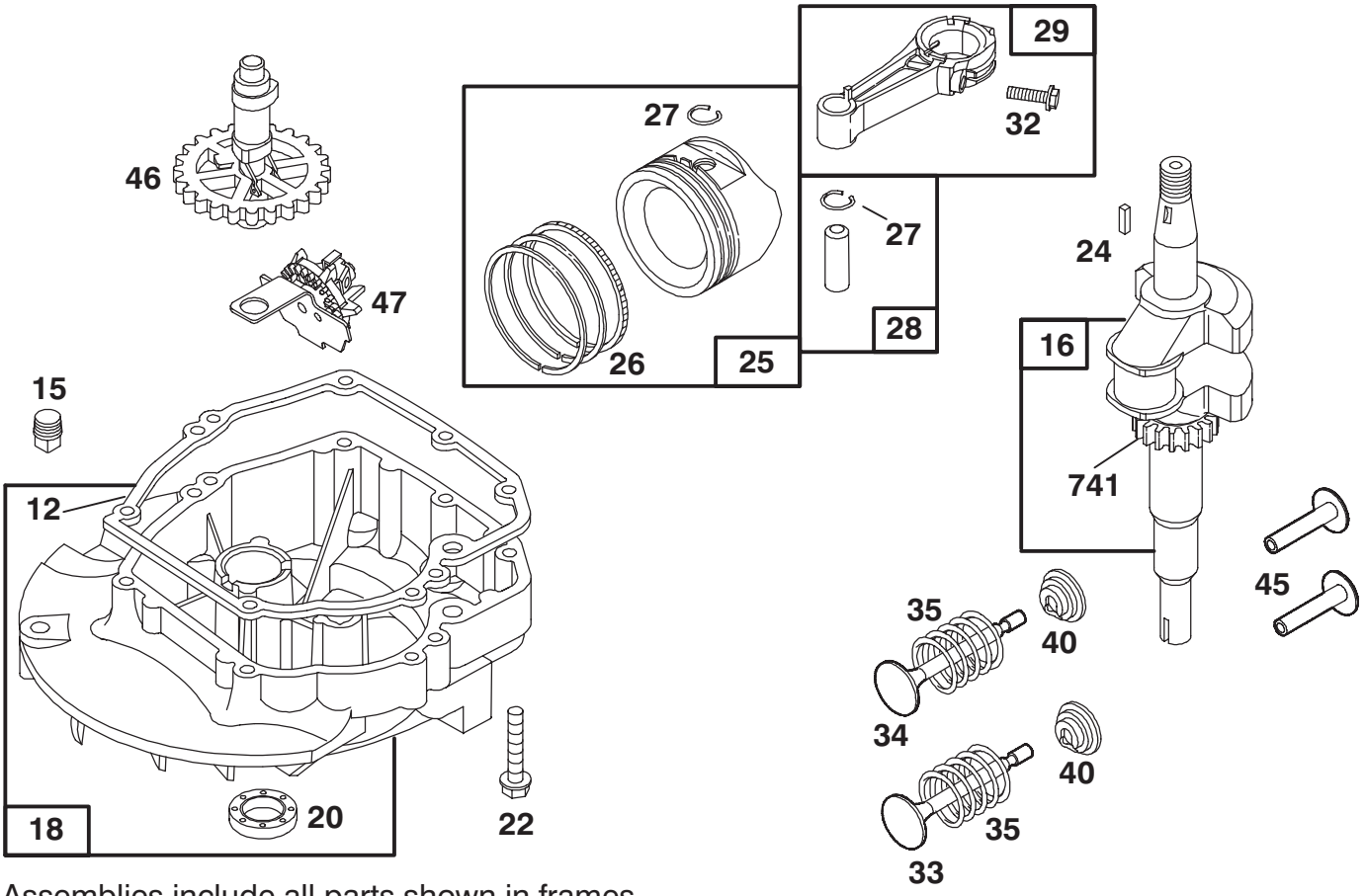


Assemblies include all parts shown in frames.

# ENGINE BRIGGS & STRATTON MODEL 12E802—0620—01

| Ref. No. | Part No. | Description | No. Used |
|---|---|---|---|
| ★12 | 272198 | Gasket — Crankcase | 1 |
| 15 | 94720 | Plug — Oil Drain | 1 |
| 16 | 494546 | Crankshaft | |
| | | **Note:** Order 94388 For Timing Gear Key. | 1 |
| 18 | 493279 | Sump — Engine | 1 |
| ★20 | 399781 | Seal — Oil | 1 |
| 22 | 94220 | Screw — Hex. Head | |
| | | **Note:** 94612 Screw — Hex. Head | |
| | | (One (1) Used in Hole Nearest Breather.) | |
| 24 | 222698 | Key — Flywheel | 1 |
| 25 | 493262 | Piston Assy. (Standard) | 1 |
| | 493385 | Piston Assy. (.010” O.S.) | 1 |
| | 493386 | Piston Assy. (.020” O.S.) | 1 |
| | 493387 | Piston Assy. (.030” O.S.) | 1 |
| 26 | 493261 | Ring Set (Standard) | 1 |
| | 493388 | Ring Set (.010” O.S.) | 1 |
| | 493389 | Ring Set (.020” O.S.) | 1 |
| | 493390 | Ring Set (.030” O.S.) | 1 |
| 27 | 26026 | Lock — Piston Pin | 1 |
| 28 | 298909 | Pin — Piston (Standard) | 1 |
| | 298908 | Pin — Piston (.005” O.S.) | 1 |
| 29 | 490566 | Rod Assembly — Connecting | 1 |
| | | **Note:** For Connecting Rod With .020” Undersize Crankpin Bearing — Order No. 490743. | |
| 32 | 94699 | Screw — Connecting Rod | 1 |
| 33 | 262651 | Valve — Exhaust | 1 |
| 34 | 262652 | Valve — Intake | 1 |
| 35 | 262224 | Spring — Valve | 1 |
| 40 | 93312 | Retainer — Valve Spring | 1 |
| 45 | 262204 | Tappet — Valve | 2 |
| 46 | 492828 | Gear — Cam | 1 |
| 47 | 493737 | Slinger — Oil | 1 |
| 741 | 262598 | Gear — Timing | 1 |

★ Included in Gasket Set—Part No. 497316.

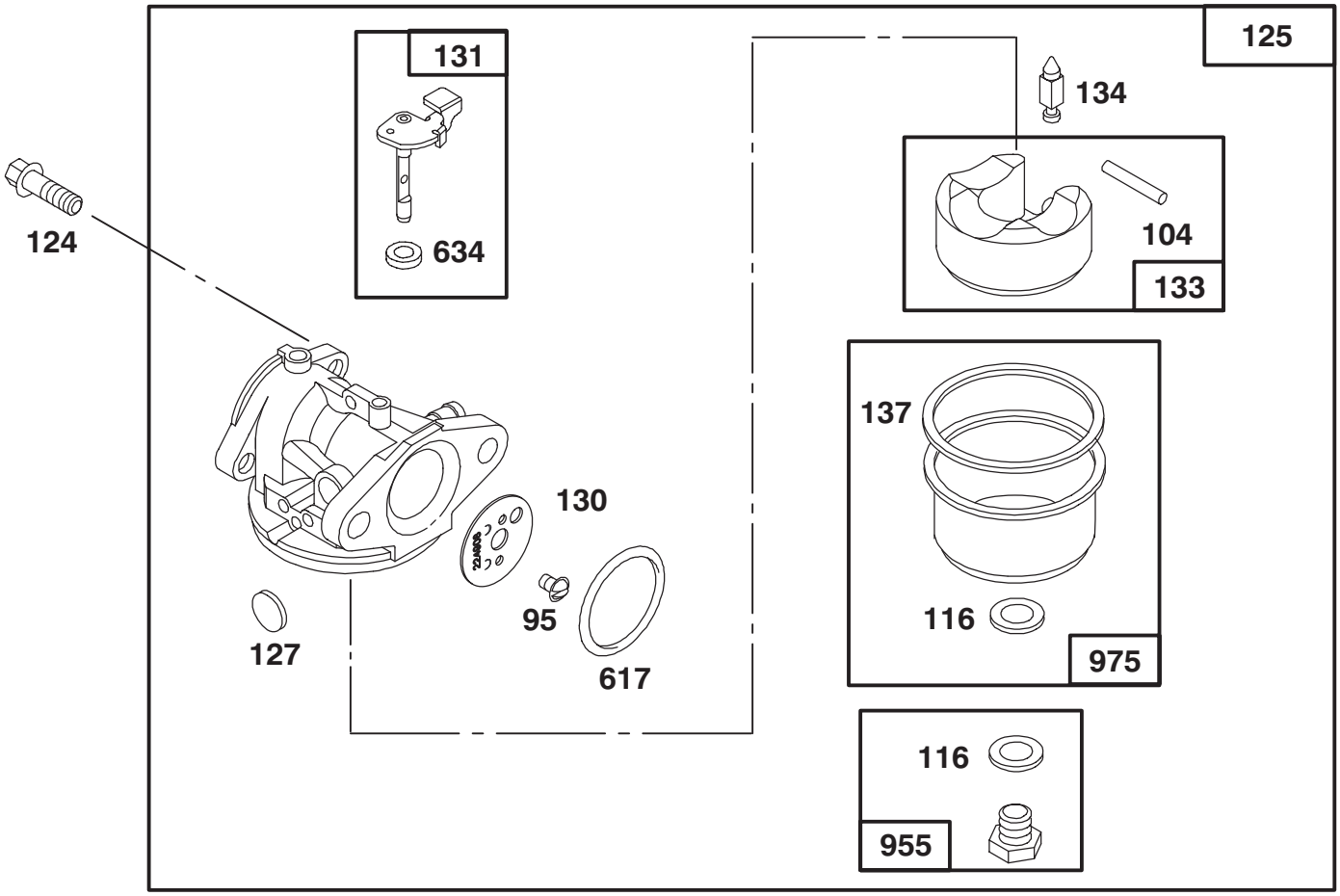


Assemblies include all parts shown in frames.

# ENGINE BRIGGS & STRATTON MODEL 12E802–0620–01

| Ref. No. | Part No. | Description | No. Used |
|---|---|---|---|
| 95 | 94098 | Screw – Throttle Valve Mounting | 2 |
| ●104 | 231371 | Pin – Float Hinge | 1 |
| ●◆116 | | Gasket – Sealing (Sold in Kit Only). | 1 |
| 124 | 94525 | Screw – Carburetor Mtg. | 1 |
| 125 | 497314 | Carburetor | 1 |
| ●127 | | Plug – Welch (Sold in Kit Only). | 1 |
| 130 | 224908 | Valve – Throttle | 1 |
| 131 | 493267 | Shaft – Throttle | 1 |
| 133 | 398187 | Float Assy. – Carburetor | 1 |

| Ref. No. | Part No. | Description | No. Used |
|---|---|---|---|
| ●134 | 398188 | Valve – Inlet (Includes Seat) | 1 |
| ●◆137 | | Gasket – Bowl (Sold in Kit Only). | 1 |
| ●◆617 | 270344 | Seal – Fuel Intake Tube | 1 |
| ●◆634 | | Washer – Shaft (Sold in Kit Only). | 1 |
| 955 | 497315 | Screw – Bowl Mtg. (Std.) **Note:** 496495 Screw – Bowl Mtg. (High Altitude) | 1 |
| 975 | 493640 | Bowl Assy. – Carburetor | |

●Included in Carburetor Kit–Part No. 493762.
◆Included in Carburetor Gasket Set–Part No. 490937.

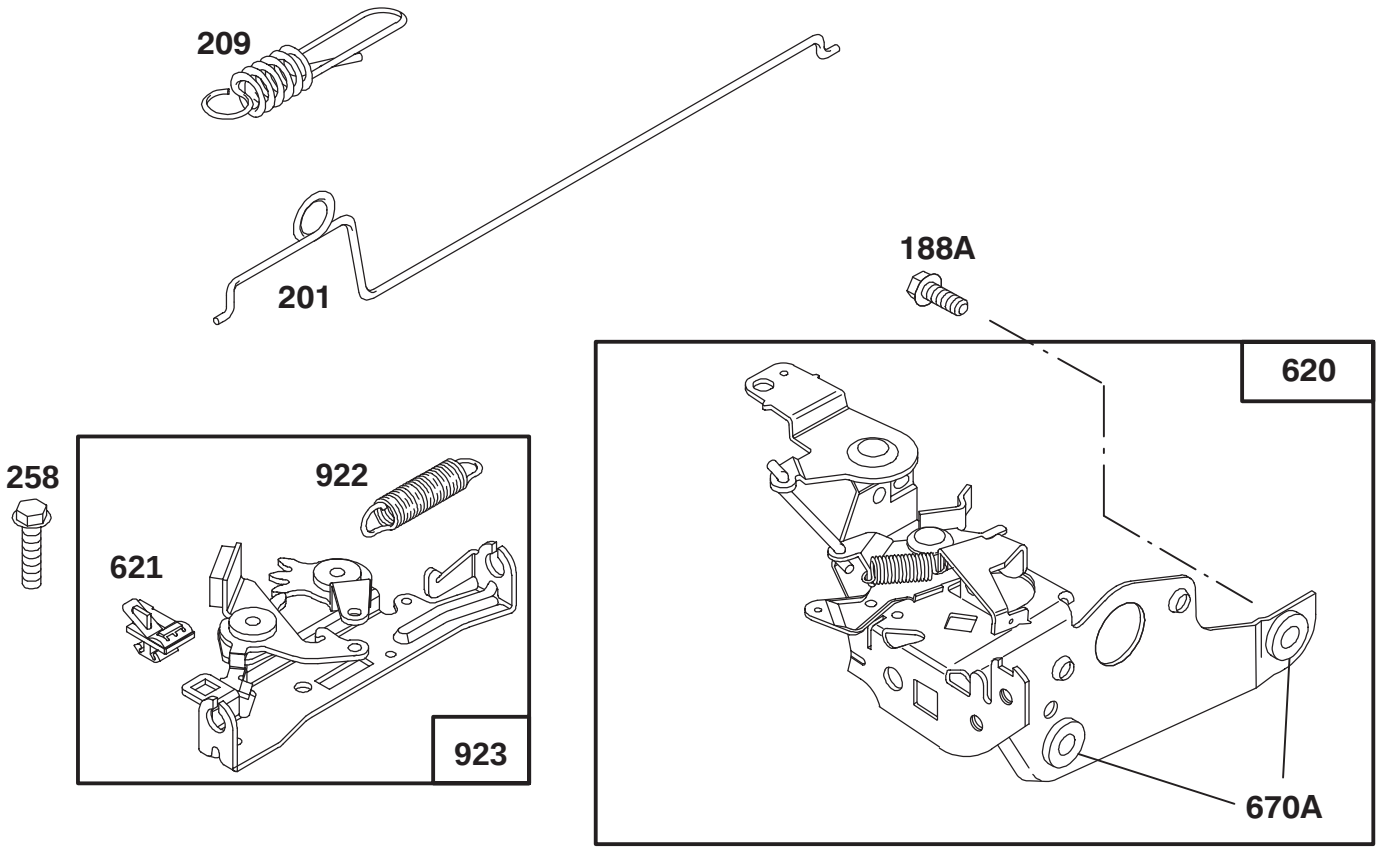


Assemblies include all parts shown in frames.

# ENGINE BRIGGS & STRATTON MODEL 12E802—0620—01

| Ref. No. | Part No. | Description | No. Used |
|---|---|---|---|
| 188A | 94644 | Screw — Hex. Head | 1 |
| 201 | 262579 | Link — Governor | 1 |
| 209 | 263043 | Spring — Governor | 1 |
| 258 | 94512 | Screw — Hex. Head | 1 |
| 620 | 497203 | Bracket — Carburetor | 1 |

| Ref. No. | Part No. | Description | No. Used |
|---|---|---|---|
| 621 | 396847 | Switch — Stop | 1 |
| ★670A | 493823 | Spacer — Bracket | 1 |
| 922 | 262640 | Spring — Brake | 1 |
| 923 | 493442 | Brake Assembly | 1 |

★Included in Gasket Set—Part No. 497316.

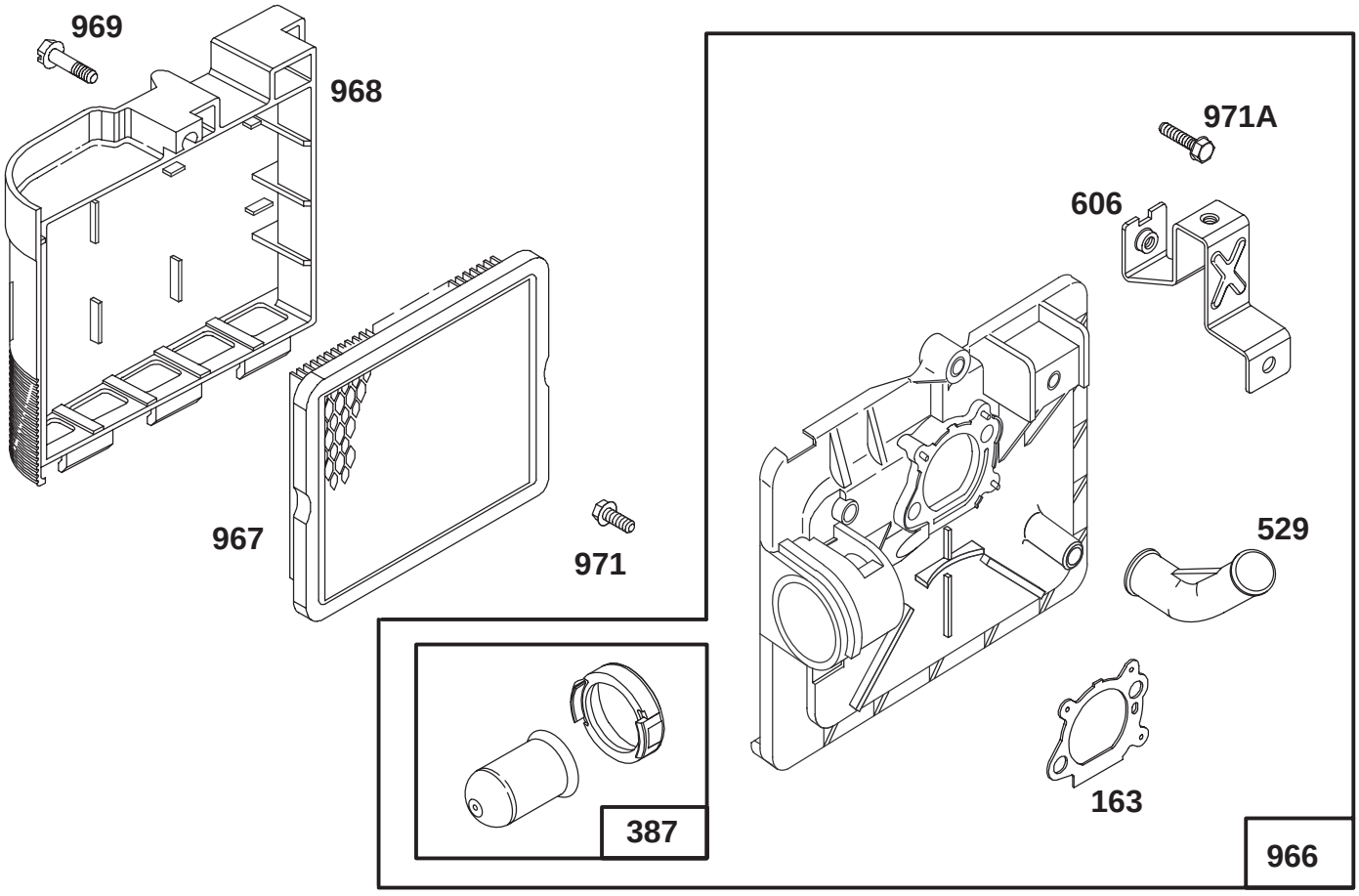


Assemblies include all parts shown in frames.

# ENGINE BRIGGS & STRATTON MODEL 12E802—0620—01

| Ref. No. | Part No. | Description | No. Used |
|---|---|---|---|
| ★163 | 272653 | Gasket — Air Cleaner | 1 |
| 387 | 496115 | Primer—Carburetor | 1 |
| 529 | 281299 | Grommet — Breather | 1 |
| 606 | 224815 | Strap — Bracket | 1 |
| 966 | 496116 | Base — Air Cleaner | 1 |

| Ref. No. | Part No. | Description | No. Used |
|---|---|---|---|
| 967 | 491588 | Filter — Air | 1 |
| 968 | 281340 | Cover — Air Cleaner | 1 |
| 969 | 94120 | Screw — Cover Mtg. | 1 |
| 971 | 94121 | Screw — Air Cleaner | 1 |
| 971A | 94749 | Screw — Hex. Head | 1 |

★Included in Gasket Set—Part No. 497316.

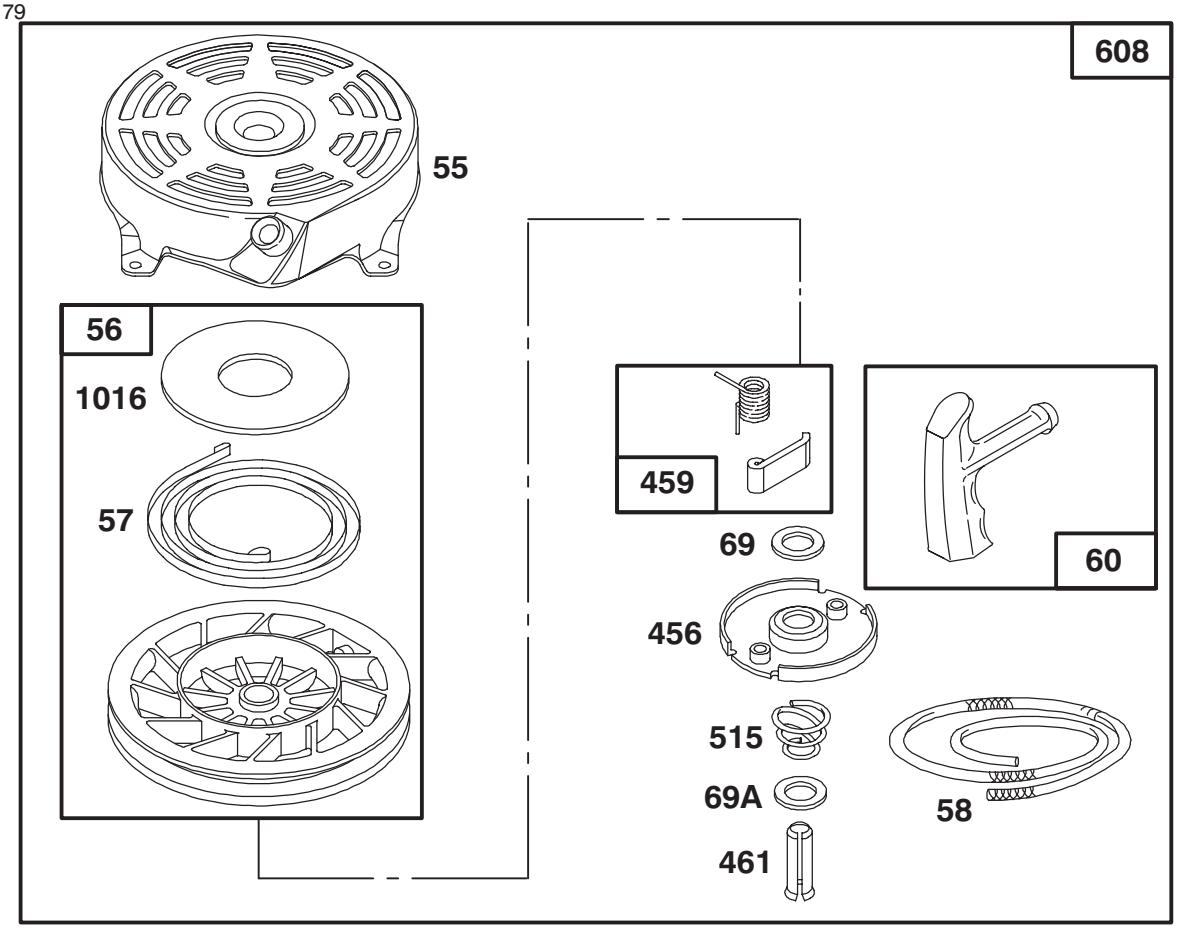


Assemblies include all parts shown in frames.

# ENGINE BRIGGS & STRATTON MODEL 12E802—0620—01

| Ref. No. | Part No. | Description | No. Used |
|---|---|---|---|
| 55 | 492831 | Housing — Rewind Starter | 1 |
| 56 | 493824 | Pulley — Rewind Starter | 1 |
| 57 | 262594 | Spring — Rewind Starter | 1 |
| 58 | 280399 | Rope — Rewind Starter | 1 |
| 60 | 393152 | Handle — Rewind Starter | 1 |
| 69 | 280973 | Washer — Rewind Starter | 1 |
| 69A | 224322 | Washer — Rewind Starter | 1 |
| 456 | 224321 | Retainer — Rewind Starter | 1 |

| Ref. No. | Part No. | Description | No. Used |
|---|---|---|---|
| 459 | 492833 | Pawl — Starter | 1 |
| 461 | 262626 | Pin — Starter | 1 |
| 515 | 262625 | Spring — Torsion | 1 |
| 608 | 493295 | Starter Assy. — Rewind | |
| | | **Includes:** | |
| | | 94128 Screw — Hex. Head | |
| | | 92987 Nut — Hex. | 1 |
| 1016 | 224278 | Cover — Rewind Starter | 1 |

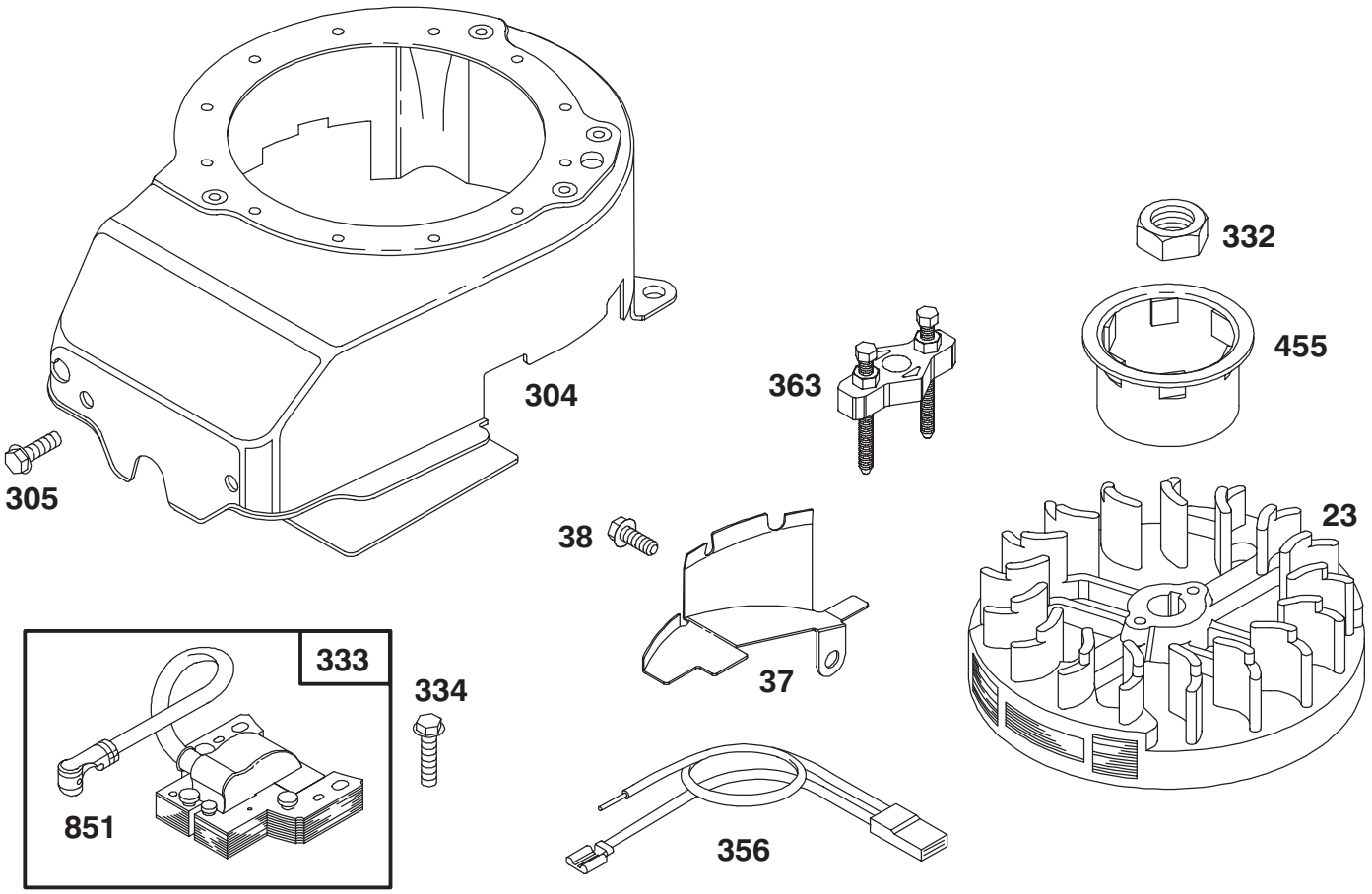


Assemblies include all parts shown in frames.

# ENGINE BRIGGS & STRATTON MODEL 12E802—0620—01

| Ref. No. | Part No. | Description | No. Used |
|---|---|---|---|
| 23 | 492177 | Flywheel | 1 |
| 37 | 224511 | Guard — Flywheel | 1 |
| 38 | 94608 | Screw — Hex. Hd. | 1 |
| 304 | 493293 | Housing — Blower | 1 |
| 305 | 94513 | Screw — Sem | 1 |
| 332 | 92284 | Nut — Flywheel | 1 |

| Ref. No. | Part No. | Description | No. Used |
|---|---|---|---|
| 333 | 802574 | Armature — Magneto | 1 |
| 334 | 94731 | Screw — Sem | 1 |
| 356 | 398808 | Wire — Ground | 1 |
| 363 | 19069 | Puller — Flywheel | 1 |
| 455 | 224250 | Cup — Starter | 1 |
| 851 | 493880 | Terminal — Ignition Cable | 1 |

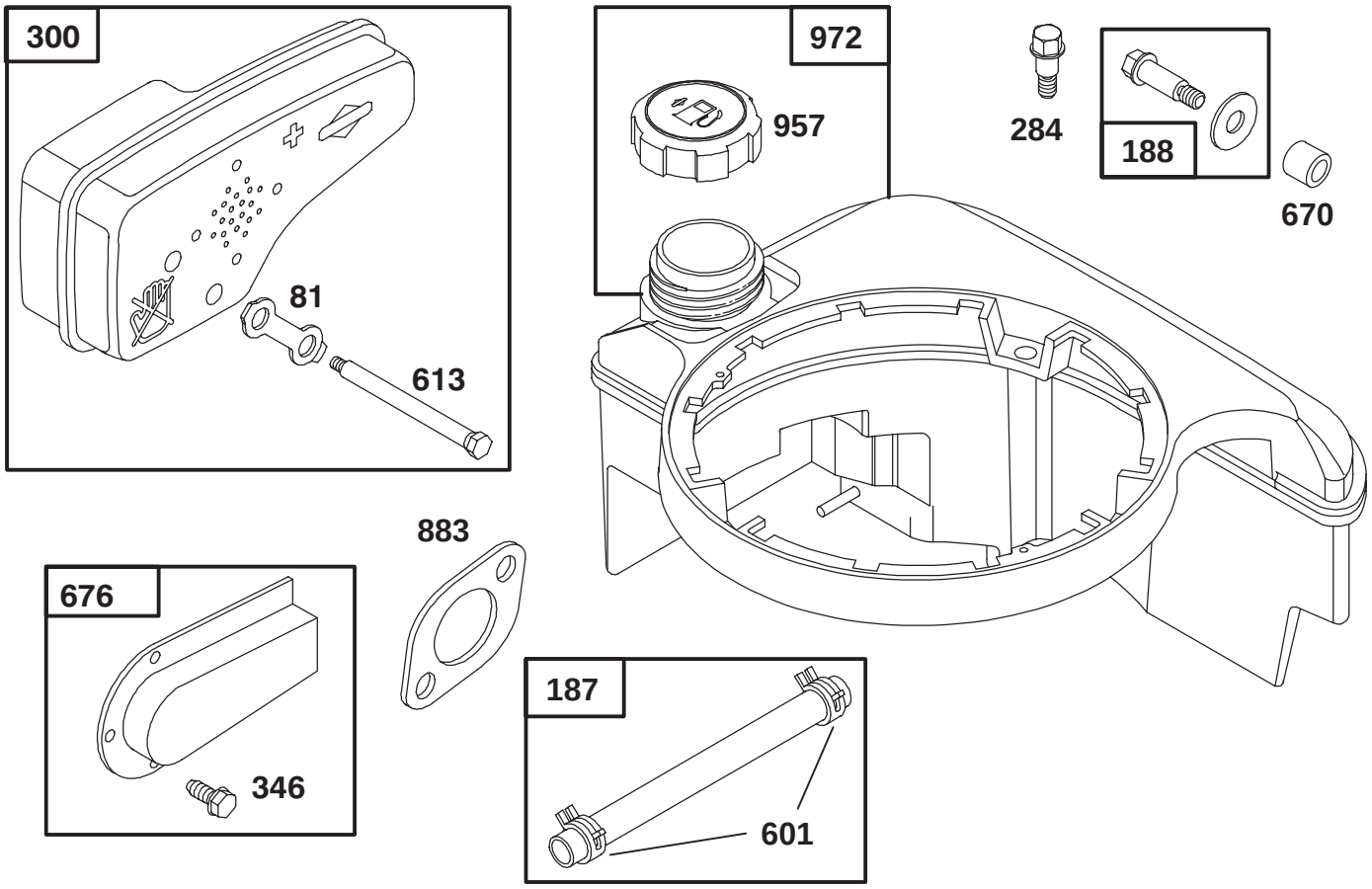


Assemblies include all parts shown in frames.

# ENGINE BRIGGS & STRATTON MODEL 12E802—0620—01

| Ref. No. | Part No. | Description | No. Used |
|---|---|---|---|
| 81 | 223664 | Lock — Muffler Screw | 1 |
| 187 | 492790 | Hose — Fuel | 1 |
| 188 | 398540 | Screw — Tank Mounting | 1 |
| 284 | 94511 | Screw — Hex. Head | 1 |
| 300 | 490547 | Muffler — Exhaust | 1 |
| 346 | 93705 | Screw — Hex. Head | 1 |
| 601 | 93807 | Clamp — Hose | 1 |

| Ref. No. | Part No. | Description | No. Used |
|---|---|---|---|
| 613 | 94231 | Screw — Muffler Mtg. | 1 |
| 670 | 280512 | Spacer — Fuel Tank | 1 |
| 676 | 493871 | Deflector — Muffler | 1 |
| ★883 | 272253 | Gasket—Muffler | 1 |
| 957 | 397974 | Cap Assy. — Fuel | 1 |
| 972 | 495224 | Tank Assembly — Fuel | 1 |

★ Included in Gasket Set—Part No. 497316.

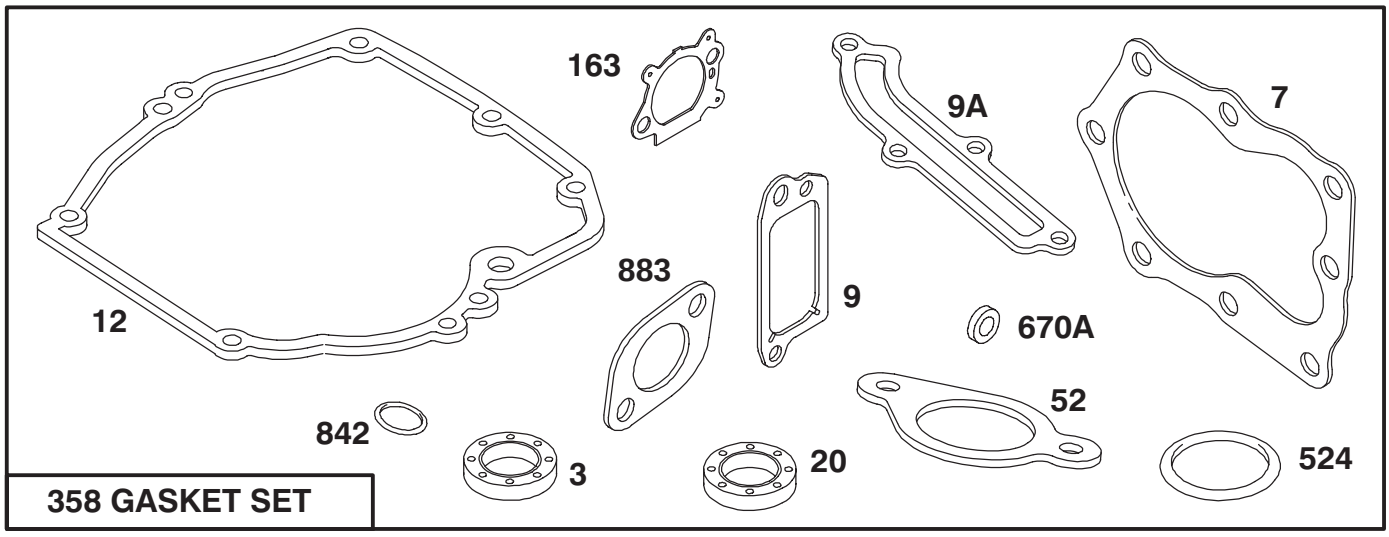


358 GASKET SET

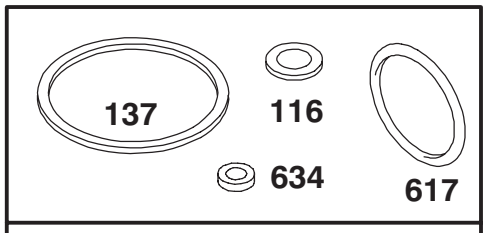


977 CARBURETOR GASKET SET

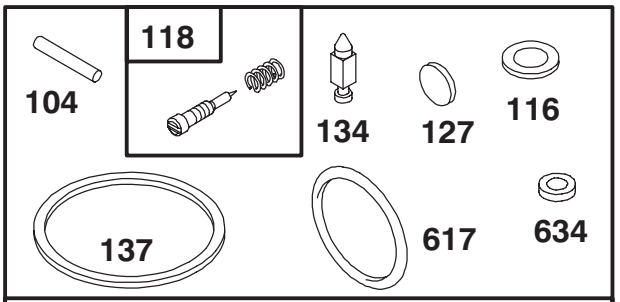


121 CARBURETOR KIT

Assemblies include all parts shown in frames.

# ENGINE BRIGGS & STRATTON MODEL 12E802—0620—01

| Ref. No. | Part No. | Description | No. Used |
|---|---|---|---|
| ★3 | 299819 | Seal — Oil | 1 |
| ★7 | 272916 | Gasket — Cylinder Hd. | 1 |
| ★9 | 272481 | Gasket — Valve Cover | 1 |
| ★9A | 272238 | Gasket — Baffle Plate | 1 |
| ★12 | 272198 | Gasket — Crankcase | 1 |
| ★20 | 399781 | Seal — Oil | 1 |
| ★52 | 272199 | Gasket — Intake Elbow | 1 |
| ●104 | 231371 | Pin — Float Hinge | 1 |
| ●◆116 | | Gasket — Sealing (Sold in Kit Only). | 1 |
| ●118 | 493765 | Valve — Needle | 1 |
| 121 | 493762 | Carburetor Kit | 1 |
| ●127 | | Plug — Welch (Sold in Kit Only) | 1 |
| ●134 | 398188 | Valve — Inlet (Includes Seat) | 1 |

| Ref. No. | Part No. | Description | No. Used |
|---|---|---|---|
| ●◆137 | | Gasket — Bowl (Sold in Kit Only) | 1 |
| ★163 | 272653 | Gasket — Air Cleaner | 1 |
| 358 | 497316 | Gasket Set | 1 |
| ★524 | 280393 | Seal — Filler Tube | 1 |
| ●◆617 | 270344 | Seal — Fuel Intake Tube | 1 |
| ●◆634 | | Washer — Shaft (Sold in Kit Only) | 1 |
| ★670A | 493823 | Spacer — Bracket (Includes 2) | 1 |
| ★842 | 280966 | Seal — O-Ring | 1 |
| ★883 | 272253 | Gasket—Muffler | 1 |
| 977 | 490937 | Gasket Set — Carburetor | 1 |

●Included in Carburetor Kit—Part No. 493762.
◆Included in Carburetor Gasket Set—Part No. 490937.

★ Included in Gasket Set—Part No. 497316.

# TORO PART NUMBER INDEX



| Part No. | Description | Pg. No. | Ref. No. | Qty. |
|---|---|---|---|---|
| 16–8919 | Housing – Deck | 1 | 15 | 1 |
| 19–4050 | Knob | 5 | 1 | 2 |
| 26–0672 | Bolt – Blade | 3 | 5 | 1 |
| 27–6231 | Bolt – Wheel | 1 | 27 | 2 |
| 40–1940 | Washer | 1 | 26 | 2 |
| 46–6980 | Support – Cable | 5 | 16 | 1 |
| 71–7740 | Spring – Counterbalance | 4 | 10 | 1 |
| 71–7860 | Grip – Upper | 5 | 5 | 1 |
| 71–7930 | Trigger – H.O.C. | 1 | 7 | 1 |
| 71–7980 | Indicator – H.O.C. | 4 | 14 | 1 |
| 71–8450 | Cover – Spring | 4 | 11 | 1 |
| 82–8550 | Shield – Muffler | 2 | 7 | 1 |
| 92–2266 | Screw – Handle | 5 | 13 | 1 |
| 92–2270 | Screw – Handle | 5 | 14 | 1 |
| 92–2289 | Plate – Logo Toro | 2 | 12 | 1 |
| 93–0243 | Shroud – Engine | 2 | 4 | 1 |
| 93–0336 | Bail – Control | 5 | 11 | 1 |
| 93–1116 | Cable – Brake | 5 | 17 | 1 |
| 93–1118 | Control – Throttle | 5 | 9 | 1 |
| 93–3720 | Baffle – Mulch | 1 | 20 | 1 |
| 93–3730 | Kicker – Front Right | 1 | 2 | 1 |
| 93–3740 | Kicker – Front Left | 1 | 16 | 1 |
| 93–3750 | Kicker – Rear Left | 1 | 14 | 1 |
| 93–3760 | Blade – 43cm | 3 | 2 | 1 |
| 93–3772 | Guide – Rope | 5 | 8 | 1 |
| 93–3781 | Cover – Shield | 1 | 13 | 1 |
| 93–3782 | Cover – Belt | 1 | 4 | 1 |
| 93–3790 | Plug – Mulch | 1 | 9 | 1 |
| 93–3793 | Screw – Retainer | 1 | 31 | 4 |
| 93–3793 | Screw – Retainer | 4 | 15 | 2 |
| 93–3794 | Bushing – Door | 1 | 12 | 1 |
| 71–7870 | Grip – Lower | 1 | 6 | 1 |
| 93–4055 | Door – Discharge | 1 | 10 | 1 |
| 93–4056 | Cap | 5 | 22 | 2 |
| 93–4057 | Spring | 5 | 4 | 1 |
| 93–4058 | Screw | 5 | 3 | 1 |
| 93–4060 | Screw | 5 | 20 | 1 |
| 93–4061 | Rod – Trigger | 4 | 1 | 1 |
| 93–4062 | Spring – Trigger Ret. | 4 | 2 | 1 |
| 93–4064 | Retainer – Axle | 4 | 16 | 2 |
| 93–4064 | Retainer – Axle | 1 | 23 | 2 |
| 93–4065 | Rod – Link | 4 | 13 | 1 |
| 93–4066 | Saddle – H.O.C. | 4 | 3 | 1 |
| 93–4079 | Axle – Rear | 4 | 5 | 1 |
| 93–4080 | Axle – Front | 1 | 24 | 1 |
| 93–4081 | Wheel & Tire Assembly 7” | 1 | 28 | 2 |
| 93–4082 | Mount – Handle R.H. | 5 | 2 | 1 |
| 93–4083 | Mount – Handle L.H. | 5 | * | 1 |
| 93–4084 | Clamp – Cable | 5 | 18 | 2 |
| 93–4085 | Frame – Bag | 6 | 2 | 1 |
| 93–4086 | Bag – Grass | 6 | 3 | 1 |
| 93–4087 | Grass Bag Remover | 6 | 1 | 1 |
| 93–4089 | Handle | 5 | 6 | 1 |
| 93–4091 | Retainer – Blade | 3 | 1 | 1 |
| 93–4094 | Screw – Hinge, Cap | 5 | 21 | 2 |
| 93–4095 | Screw | 4 | 4 | 2 |
| 93–4095 | Screw | 1 | 5 | 5 |
| 93–4097 | Washer – Wheel | 4 | 8 | 2 |
| 93–4098 | Nut – Lock | 4 | 7 | 2 |
| 93–4105 | Decal | 1 | 11 | 1 |
| 93–4110 | Baffle | 1 | 19 | 1 |
| 93–4351 | Decal – Deck | 1 | 1 | 1 |
| 93–4352 | Decal – Shroud | 2 | 1 | 1 |
| 93–5412 | Stop – Pivot | 5 | 12 | 1 |
| 93–7023 | Bushing | 4 | 9 | 4 |
| 93–7024 | Bushing | 1 | 30 | 4 |
| 93–8470 | Screw – Clamp | 2 | 10 | 1 |
| 93–8492 | Wheel & Tire Assembly | 4 | 6 | 1 |
| 93–8731 | Stiffener – Blade | 3 | 3 | 1 |
| 93–9836 | Wheel & Tire Assy. | 4 | 17 | 1 |
| 2210–249 | Clamp – Casing | 2 | 11 | 1 |
| 2210–316 | Stop – Rope | 2 | 3 | 1 |
| 321–52 | Screw | 5 | 7 | 1 |
| 3250–13 | Screw | 1 | 21 | 1 |
| 3253–22 | Washer – Lock | 3 | 4 | 1 |
| 3256–1 | Washer – Flat | 5 | 15 | 1 |
| 3256–21 | Washer | 1 | 18 | 1 |
| 3284–5 | Pin – Groove | 1 | 8 | 1 |
| 3290–378 | Tie – Cable | 2 | 5 | 1 |
| 3296–2 | Nut | 1 | 17 | 1 |
| 3296–6 | Nut – Lock | 1 | 25 | 2 |
| 3296–73 | Nut – Lock | 5 | 10 | 3 |
| 32112–11 | Nut – Push | 1 | 22 | 1 |
| 32144–73 | Screw – Hex Washer Hd. | 2 | 6 | 3 |
| 32144–97 | Screw | 5 | 19 | 2 |
| 32144–102 | Screw – Engine | 2 | 8 | 3 |
| 32144–111 | Screw – Phillips Head | 1 | 3 | 6 |
| 32144–121 | Screw – Mounting | 2 | 2 | 2 |

*Not Illustrated