FORM NO. 3320-120 Rev A

TORO®

19" H.P. MODEL 16009, 16067-90000001 & UP
21" H.P. MODEL 16113, 16155-90000001 & UP
21" S.P. MODEL 16277, 16287-90000001 & UP

OPERATOR'S MANUAL

19" (0.48 m) AND 21" (0.53 m) WHIRLWIND II

FINGERTIP START, HAND PROPELLED & SELF PROPELLED



The WHIRLWIND II mower meets or exceeds the Canadian Outdoor Power Equipment Association safety standards for rotary mowers; thus, Toro proudly displays the C.O.P.E.A. safety seal.

CANADIAN OUTDOOR POWER EQUIPMENT ASSOCIATION
CONFORMS TO SAFETY STANDARD
CERTIFIED BY MANUFACTURER
RÉPONDANT AUX NORMES DE SÉCURITÉ
CERTIFIÉ PAR LE FABRICANT
ASSOCIATION CANADIENNE DES FABRICANTS D'OUTILLAGE MÉCANIQUE POUR L'EXTÉRIEUR

To assure maximum safety, optimum performance, and to gain knowledge of the mower, it is essential that you or any other operator of the mower read and understand the contents of this manual before the engine is started. Pay particular attention to the instructions highlighted by the red safety symbol. Failure to comply with the safety instructions may result in personal injury.

PRICE $1.00

FOREWORD

The WHIRLWIND II with exclusive WINDTUNNEL® housing provides unequaled performance in mowing efficiency and reliability. If the mower is set up, operated and maintained properly it will give long, dependable service.

To familiarize yourself with safety, set-up, operating and maintenance instructions, read this manual thoroughly. The major sections of this manual are:

1. Safety Instructions
2. Set-Up Instructions
3. Before Operating
4. Controls
5. Operating Instructions
6. Maintenance

Safety, mechanical, and some general information in this manual is emphasized. DANGER, WARNING, and CAUTION identify the safety messages. Whenever the red safety symbol appears, it is followed by a safety message; therefore, refer to the safety instructions on page 3 and 4 for complete details. IMPORTANT identifies special mechanical information and NOTE identifies general information worthy of special attention.

If help — concerning safety, set-up, operation and maintenance — is ever needed, contact the local Authorized TORO Service Dealer or Distributor. Refer to the "Yellow Pages" for assistance. In addition to skilled service technicians, the dealer and distributor have other TORO Products, as well as factory approved accessories and replacement parts. Keep your Toro all TORO. Buy genuine TORO replacement parts and accessories.

TABLE OF CONTENTS

Safety Instructions 3-4
Identification and Ordering 5
Specifications 5-6
Loose Parts 6
Set-Up Instructions 6
Before Operating 7
  Fill Crankcase with Oil 7
  Fill Fuel Tank with Gasoline 7
Controls 8
Operating Instructions 8-11
  Adjust Height-of-Cut 8
  Operating Characteristics and Tips 8-9
  Installing Optional Grass Bag 9-10
  Starting/Stopping the Engine 10-11
  Using Wash-Out Port 11
Maintenance 11-18
  Lubrication 11-12
  Servicing Air Cleaner 12
  Replacing Spark Plug 12-13
  Changing Crankcase Oil 13
  Inspecting Blade for Damage 13-14
  Sharpening or Replacing Cutter Blade 14
  Cleaning Mower Housing 15
  Adjusting Throttle Control 15
  Checking Gear Case 15
  Adjusting Drive Control 15-16
  Adjusting Recoil Traction Lockout 16
  Adjusting Carburetor 17
  Preparing Mower for Storage 18
Trouble Shooting 19
The Toro Promise . . . . . Back Cover

COPYRIGHT© ALL RIGHTS RESERVED

The Toro Company — 1978
MINNEAPOLIS, MN 55420 — U.S.A.

SAFETY INSTRUCTIONS

BEFORE OPERATING

1. Operate the mower only after reading this manual. A replacement manual is available by sending complete model and serial number to: The Toro Company, 8111 Lyndale Avenue South, Minneapolis, Minnesota 55420. Attn: Publications.

2. Never allow children to operate the mower or adults to operate it without proper instructions.

3. Become familiar with the controls and know how to stop the engine quickly.

4. Keep everyone, especially children and pets, away from the area of operation. Remove sticks, stones, wire and any other debris that might be picked up and thrown by the blade.

5. Keep all shields and safety devices in place. If a shield, safety device or decal is defective or damaged, repair or replace it before operation is commenced.

6. Wear long pants and substantial shoes. Do not operate mower while wearing sandals, tennis shoes, sneakers or shorts. Do not wear loose fitting clothing that could get caught in moving parts.

7. If long grass will be cut, set height-of-cut in highest position. After mowing, reinspect the area and remove all debris. Then lower the height-of-cut and mow grass again.

8. Since gasoline is highly flammable, handle it carefully.

   A. Use an approved gasoline container.

   B. Do not fill fuel tank when engine is hot or running.

   C. Do not smoke while handling gasoline.

   D. Fill fuel tank outdoors and up to about one-half inch from the top of the tank, not the filler neck.

   E. Wipe up any spilled gasoline.

WHILE OPERATING

9. Move drive control into DISENGAGE detent before trying to start engine. Engine will not start when drive control is in the ENGAGE position.

10. Cutting grass with rotary mower demands attention. **Always maintain secure footing, balance and control.**

11. Cut grass during the daytime or when there is adequate artifical light. Cut grass slopes from side to side, but avoid slopes when grass is wet.

12. Keep face, hands and feet away from the mower housing, cutter blade and self-propelled drive while the engine is running. Stay behind the handle until the engine and all moving parts stop.

13. During operation the grass deflector or complete bagging assembly must be installed on the mower.

14. Since the blade rotates for a few seconds after throttle control is moved to STOP, stay behind the handle until all moving parts stop.

15. Stop the engine and wait for all moving parts to stop before removing the bag, bagging assembly or unclogging the discharge chute. If chute must be unclogged, pull high tension wire off the spark plug. Use a stick to remove the obstruction. Slide end of wire onto V shaped notch to prevent possibility of accidental starting.

16. If a solid object is hit by the blade or if mower vibrates abnormally, stop the engine and disconnect high tension wire from the spark plug. Slide end of wire onto V-shaped notch to prevent possibility of accidental starting. Then check mower for possible damage, bent blade, an obstruction or loose parts. Repair the mower before using it again.

17. Stop the engine before adjusting the height-of cut.

18. If a gravel driveway, road or side walk must be crossed, stop the engine so loose sand and rocks are not thrown.

19. Before leaving the operator's position – behind the handle—move drive control lever into DISENGAGE detent, stop the engine and wait for all moving parts to stop. Do not walk in front of the mower while the engine is running. Disconnect high tension wire from spark plug if mower will be unattended.

20. Do not touch any part of the engine while it is running or shortly after it is stopped because the engine will be hot enough to cause a burn.

MAINTENANCE

21. Before the mower is serviced or adjusted, move drive control into DISENGAGE detent, stop the engine and disconnect high tension wire from spark plug. Slide end of wire onto V-shaped notch to prevent the possibility of accidental starting.

22. To assure the mower is in safe operating condition, keep all nuts, bolts and screws tight. Assure blade bolt is tightened to 50 ft-lb (68 N·m) and engine mounting bolts are tightened to 16 ft-lb (22 N·m).

SAFETY INSTRUCTIONS

23 Perform only those maintenance instructions described in this manual. If major repairs are ever needed or if assistance is desired, contact an Authorized TORO Service Dealer.

24. If mower must be tipped when it is serviced or adjusted, drain gasoline from the fuel tank.

25. If a guard, safety device or safety decal is damaged, replace the defective part(s) before operating the mower.

26. To reduce potential fire hazards, assure mower is free of excessive grease, grass, leaves and accumulations of dirt.

27. The grass bag must always be in good condition; therefore, check it before each use to assure the bag is not torn or deteriorated. Replace a defective grass bag.

28. Allow engine to cool before storing mower in any enclosure such as a garage or storage shed. Do not store mower near any open flame or where gasoline fumes may be ignited by a spark.

29. Do not overspeed the engine by changing governor settings. Recommended speed of the engine is 2700 rpm. To assure safety and accuracy, have an Authorized TORO Service Dealer check maximum engine speed, 2700 rpm, with a tachometer.

30. At the time of manufacture the mower conformed to the safety standards in effect for rotary mowers. To assure optimum performance and continued safety certification of the mower, use genuine TORO replacement parts and accessories. Replacement parts and accessories made by other manufacturers may result in nonconformance with the safety standards, and that could be dangerous.



SAFETY DECALS

Safety decals and instructions are easily visible to the operator and are located near any area of potential danger. Replace any decal that is damaged.

On Handle

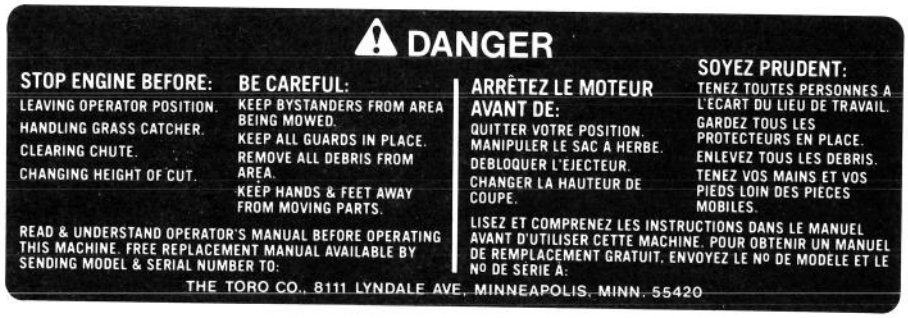

On Discharge Deflector



On Mower Housing



IDENTIFICATION AND ORDERING

MODEL AND SERIAL NUMBERS

The SIDE DISCHARGE has two identification numbers: a model number and a serial number. The two numbers are stamped into a decal located on back of mower housing, between the rear wheels. In any correspondence concerning the mower, supply model and serial numbers to assure correct information and replacement parts are obtained.

To order replacement parts from an Authorized TORO Service Dealer, supply the following information:

1. Model and serial numbers of the mower.

2. Part number, description and quantity of part(s) desired.

Note: Do not order by reference number if a parts catalog is being used; use the PART NUMBER.

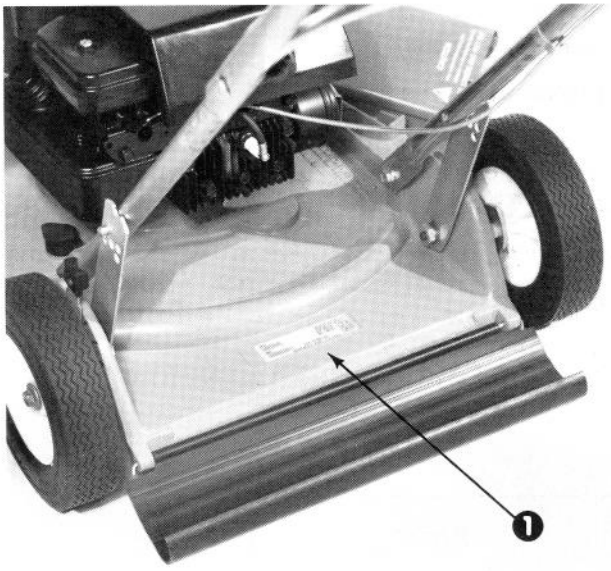

1. Model and Serial Number Decal

SPECIFICATIONS

Briggs & Stratton Engine; Recoil equipped, four cycle engine, model 92508, type 1000-01 is used on 19" (0.48 m) HP SIDE DISCHARGE. Output of engine is 3 hp (2.2 kw) @ 3600 rpm and 4.75 ft-lb (6.4 N·m) of torque @ 2700 rpm. Engine model 92908, type 1842-01 is used on 21" (0.53 m) HP and SP SIDE DISCHARGE. The 21" (0.53 m) air cooled engine has an output of 3.5 hp (2.6 kw) @ 3600 rpm and 5.0 ft-lb (6.8 N·m) of torque @ 2700 rpm. Displacement of both engines is 9.02 cubic inches (148 cc). Crankcase capacity is approximately 20 ounces (0.59 l) of oil.

Fuel Tank: Capacity of fuel tank is 1 quart (0.946 l).

Mower Housing: Die cast aluminum alloy housing has spiral grass chamber, right side discharge, and symmetrical wheel locations. Grass discharge deflector is hinged to mower housing.

Cutter Blade; Blade is heat treated for hardness. The 19" (0.48 m) has 19 inch (0.48 m) blade and the 21" (0.53 m) has 21 inch (0.53 m) blade.

Blade Tip Speed: The 19" (0.48 m) SIDE DISCHARGE has tip speed of 14,400 ft/min (73 152 m/s) @ 2900 rpm; 12,400 ft/min (62 992 m/s) @ 2500 rpm. The 21" (0.53 m) SIDE DISCHARGE has tip speed of 15,950 ft/min (81 026 m/s) @ 2900 rpm; 13, 750 ft/min (69 850 m/s) @ 2500 rpm.

Throttle Control: Control is mounted on right side of upper handle. Hand operated control connects to and operates the carburetor. Control has two positions: STOP and START.

Traction Drive: The 21" self-propelled SIDE DISCHARGE has a traction control mounted on left side of upper handle. Hand operated control connects to and operates a spiral jaw clutch in the gear case. Control has two positions: ENGAGE and DISENGAGE. The front wheel drive has special 3L section V-belt that connects die cast aluminum gear box to an output shaft on the engine. Engine to gear box reduction is 0.98:1. Input to output reduction is 6.25:1. Use SAE 90 EP (extreme pressure) gear lube in the gear box for lubrication.

Wheels: Wheels are made of high density, linear polyethylene and oil impregnated, powdered metal busings.

Tires: The 19" (0.48 m) SIDE DISCHARGE has 6-3/4" x 1.50" (172 x 38 mm) semi-pneumatic front tires and 8" x 1.75" (203 x 44mm) semi-pneumatic rear tires with Toro tread. However, 21" (0.53 m) SIDE DISCHARGE has 8" x 1.75" (203 x 44 mm) semi-pneumatic front and rear tires.

Handles: Two handles are 7/8 inch (22 mm) diameter welded steel tubing with chrome plating. Handle is adjustable to one of three operating positions and an upright storage position.

Height-of-Cut: Height-of-cut is adjustable to one of five approximate settings: 1 inch; 1-1/2 inches;

SPECIFICATIONS (continued)

2 inches; 2-1/2 inches; and 3 inches (25, 38, 51, 64, and 76 mm).

Approximate Dimensions:

Overall width of 19" (0.48 m) SIDE DISCHARGE is 25-3/4 inches (0.65 m); 21" (0.53 m) is 27-15/16 inches (0.71 m).

Overall length of 19" (0.48 m) w/o handle and with wheels set at 1 inch (25 m) is 29-3/4 inches (0.756 m) and 21" (0.53 m) hand-propelled is 31-3/8 inches (0.797 m). The self-propelled 21" SIDE DISCHARGE is 32-3/4 inches (0.832 m).

Height of 19" (0.48 m) and 21" (0.53 m) w/o handle is 13 inches (0.33 m); self-propelled is 14-1/2 inches (0.368 m).

Approximate Weight: Dry weight of 19" (0.48 m) hand–propelled, 21" (0.53 m) hand-propelled, and 21" (0.53 m) self-propelled is 54 lb (240 N), 57 lb (258 N) and 60 lb (267 N) respectively.

Optional Equipment: Grass bagging kit, part no. 27-7820 and giant bagging kit, part no. 22-4810 are accessories that may be purchased from an Authorized TORO Service Dealer.

LOOSE PARTS

PART	QTY.	WHERE USED
Operator's Manual	1	Read manual before operating mower.
Registration Card	1	Fill out card and send it to The Toro Company.

SET-UP INSTRUCTIONS

ASSEMBLE AND ADJUST HANDLE

Tools Required: None

1. Loosen handle knobs and pivot upper handle forward until it forms a single handle with the lower handle (Fig. 1), but do not accidentally damage the control cable. Tighten both handle knobs to lock the parts together. Assure the knobs are on inside of handle.

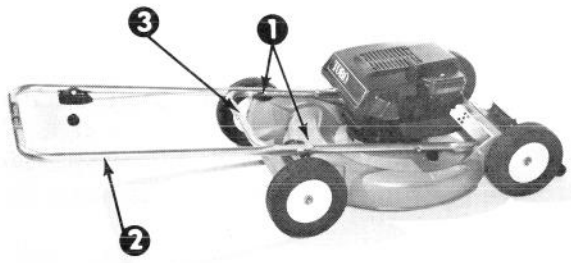

Figure 1
1. Handle Knobs
2. Upper Handle
3. Lower Handle

2. Move the complete handle and the handle latches backward, and slide pins on outside of lower handle into bottom rear hole in handle latches (Fig. 2).

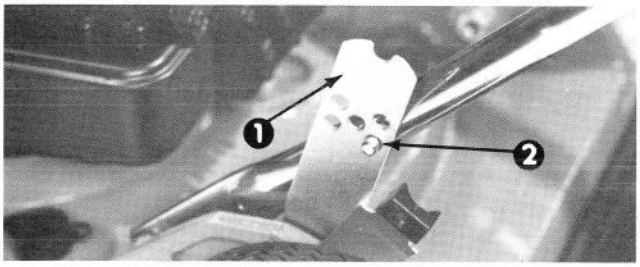

Figure 2
1. Handle Latch
2. Handle Stud

3. Set all wheels in 2 inch (51 mm), mid position (Fig. 3): refer to Adjust Height-of-Cut, page 8. Step behind handle and check its height. If higher or lower handle height is desired, position pins into one of the other holes in the latches (Fig. 2).

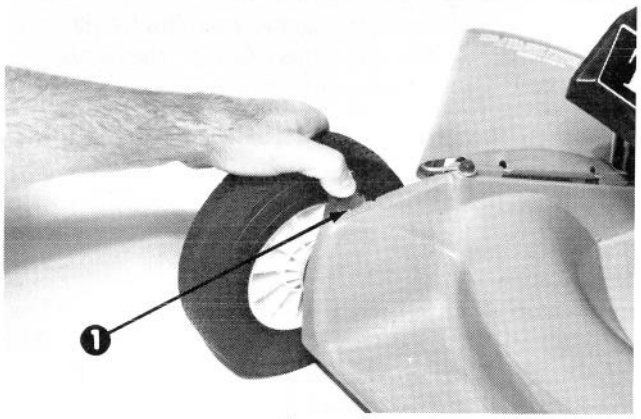

Figure 3
1. Height-of-Cut Adjuster –Set in 2 inch; (51 mm) Position.

BEFORE OPERATING

FILL CRANKCASE WITH OIL

Tools Required: Funnel and Clean Rag

The engine does not have oil in the crankcase when it is shipped from the factory. If engine is started before oil is added to the crankcase, engine damage will result. Therefore, before engine is started for the first time:

1. Position mower on level surface.

2. Clean area around oil fill plug to prevent foreign matter from entering filler hole when plug is removed.

3. Remove fill plug from crankcase (Fig. 4).

4. Slowly pour approximately 20 ounces of (0.591) oil into the filler hole until oil is ready to overflow. The engine uses any high quality detergent oil having the American Petroleum Institute – API – "Service classification" MS, SC, SD or SE. The recommended weight oil to use is:

A. Above +40F (4°C) – Use SAE 10W-30 or 10W-40 oil.

B. Below +40F (4°C) – Use SAE 5W-20 or 5W-30 oil.

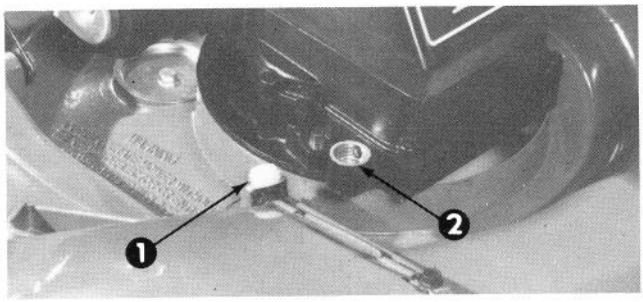

Figure 4

1. Fill Plug
2. Filler Hole

5. After crankcase is filled with oil, rock mower gently to release any air that is trapped in the crankcase. If level of oil drops, fill crankcase to the point of overflowing.

6. Install the fill plug and wipe up any oil that may have spilled.

Note: Check level of oil after every 5 operating hours or each time the mower is used. Initially, change oil after the first 2 hours of operation; thereafter, when conditions are normal, change oil after every 25 hours of operation. However, change oil more frequently when mower is operated in dusty or dirty conditions.

FILL FUEL TANK WITH GASOLINE

Tools Required: Funnel and Clean Rag.

1. Clean area around fuel tank cap and remove cap from tank (Fig. 5).

2. Fill fuel tank to within 1/2 inch (13 mm) from top of the tank with unleaded gasoline. Install fuel tank cap securely.

Note: If unleaded gasoline is not available, leaded-regular gasoline can be used.

3. Wipe up spilled gasoline.

IMPORTANT: The use of unleaded gasoline is recommended. Do not mix any oil with the gasoline, and never use premium gasoline, gasoline additives or white gas because engine damage will likely result.

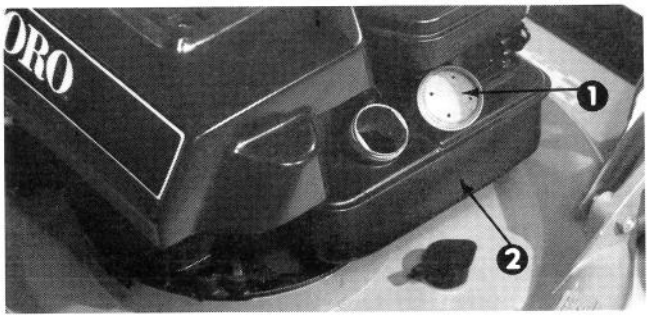

Figure 5

1. Fuel Cap
2. Fuel Tank

CAUTION

Gasoline is a highly flammable fuel for internal combustion engines, and it is not recommended for any other use. Always handle it carefully. Since many children like the smell of gasoline, keep it out of their reach because the fumes are explosive and dangerous to inhale.

To assure volatility, buy only a 30 day supply of gasoline, and store the gasoline in a cool, well-ventilated place; never in the house or basement. Always use a clean, approved gasoline container, and keep the cap tight to prevent the escape of fumes from the container.

Fill fuel tank outside, use a funnel or spout to prevent spilling, and wipe up any gasoline that does happen to spill. Fill fuel tank only while engine is cool and not running. Fill the tank to about 1/2 inch (13 mm) from the top, so there is room for expansion of the gasoline. While filling the fuel tank, stay away from open flame and electrical spark, and do not smoke.

CONTROLS

Throttle Control (Fig. 6) – The throttle control is used to stop the engine. The speed of the blade is also controlled by the movement of the throttle. Moving throttle forward increases engine speed and moving it backward decreases engine speed. When control is in START position, engine will run at maximum rpm.



Figure 6
1. Throttle Control

Drive Control (Fig. 6)– Drive control on the self-propelled model has two positions: ENGAGE and DISENGAGE. Move control to the left and forward to engage front wheel drive. Pull control backward into detent position to disengage front wheel drive. The detent holds drive control in DISENGAGE position. Control must be in DISENGAGE detent before engine will start on self-propelled model.

Recoil Starter (Fig. 7) – After moving throttle control to START position, pull fingertip starter to start the engine.

Height-of-Cut Adjuster (Fig. 8) – Height-of-cut is adjustable to one of five approximate settings; 1 inch, 1-1/2 inches, 2 inches, 2-1/2 inches, or 3 inches (25, 38, 51, 64, or 76 mm). In addition, front wheels have a 5/8 inch (16 mm) setting that can be used with the 1 inch (24 mm) rear wheel setting. When cutting thatch or heavy, thick grass, raise rear wheel one setting above the front wheel setting to assure optimim power to the blade.

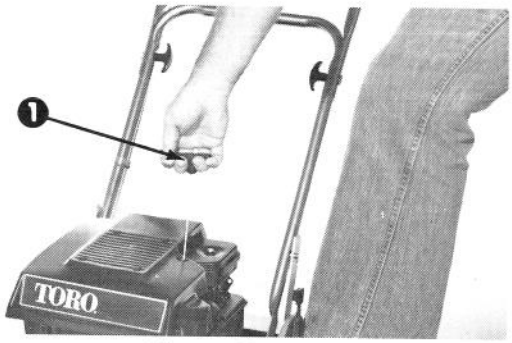

Figure 7
1. Recoil Starter Handle

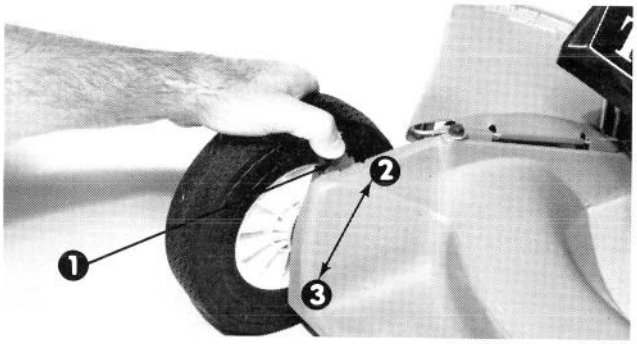

Figure 8
1. Height-of-Cut Adjuster
2. Low Height Setting
3. High Height Setting

OPERATING INSTRUCTIONS

ADJUST HEIGHT-OF-CUT

The height-of-cut is adjustable from approximately 1 to 3 inches (25 to 76 mm), in 1/2 inch (13 mm) increments, and notches cast into the housing represent each graduated increment.

1. ⚠ Assure drive control is in DISENGAGE **detent** and engine is not running before adjusting height-of-cut because contact with the blade will cause personal injury.

2. Place thumb against height-of-cut adjuster and fingers on outside of wheel (Fig. 8).

3. Raise mower housing until wheel is off the ground. Squeeze height-of-cut adjuster toward wheel so its locating pin disengages notch in mower housing. Then pivot the wheel and adjuster to the desired height-of-cut, and release adjuster so locating pin engages notch in housing.

OPERATING CHARACTERISTICS AND TIPS

The SIDE DISCHARGE has a high torque engine that runs at a low, 2700 rpm, yet delivers the blade turning force necessary to produce a good quality-of-cut. The reduced engine speed should result in less engine wear, less noise when compared with other rotory mowers, and better gasoline economy.

OPERATING INSTRUCTIONS

The mower has conventional side discharge, but can be used to bag grass when the optional bagging kit is installed: refer to Installing Optional Bagging Kit, page 9. When using the side discharge, direct the discharged grass toward the previously cut area, not toward the uncut grass. This prevents the engine from any unnecessary load – cutting the same grass twice – and it should result in a better quality-of-cut. To use the mower for bagging grass, install the complete bagging assembly, start the engine and use maximum engine speed to assure a good quality-of-cut. As grass is being cut, the bag will be filled and slowly start to sag toward the ground. Empty the bag often by opening the zipper, rather than letting it get too full and possibly plugging the discharge opening. Disengage drive control and stop engine before removing the bag, and always assure zipper is closed before bagging assembly is reinstalled.

Since the mower is equipped with a rear shield (Fig. 9), feet are protected from objects that might be thrown rearward and from possible contact with the blade. Because of its flexible design, maneuverability of the mower is unaffected. Never remove the rear shield because it is a safety device, designed for your protection. If the shield is ever damaged, replace it before operating the mower.

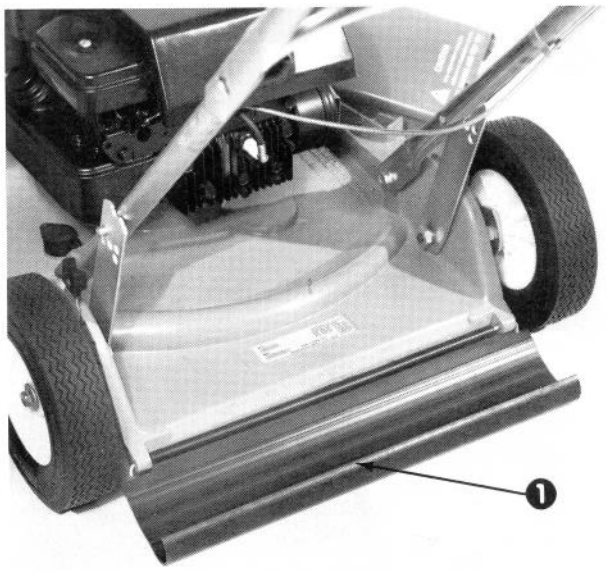

Figure 9

1. Rear Shield

After the mower is used, it must be cleaned and maintained so it is ready for the next cutting. Use the wash out port to clean the underside of the mower housing. However, avoid getting water directly onto the engine because damage could result. Periodically, check the air cleaner and blade, and assure the blade bolt is tightened to 50 ft-lb (68 N·m). The oil in the crankcase must be changed after the first 2 hours of operation and every 25 hours thereafter. Assure level of oil is always up to the top of the filler opening, the point of overflowing.

Whenever the mower is being operated, adjusted or maintained, the safety instructions at the front of this manual must be kept in mind. Safe operation is your responsibility.

INSTALLING OPTIONAL GRASS BAG FOR MODELS 16067, 16155 AND 16287

⚠ CAUTION

Before installing or removing grass bag assembly, move drive control into DISENGAGE detent, if mower is equipped with one, and stop the engine. Since blade rotates for a few seconds after engine is shut off, stay behind the handle until all moving parts stop.

Bagging is most effective when engine is running at maximum speed and only about 1/4 of the grass blade is being cut. If an excessive amount of grass is being cut off, the mower can plug and cause the engine to stall. If long grass must be cut, adjust mower to the highest height-of-cut and cut the grass. Follow this by lowering the height-of-cut and cutting the grass again.

To install the bagging assembly:

1. Grasp bag chute by the handle and insert chute slides into grooves in deflector. Raise deflector with the bag chute and slide the chute fully forward (Fig. 10). Allow spring tension of deflector to lower the bag chute so its tab settles into slot in mower housing. Do not use your free hand to raise grass deflector when installing the bag chute, even though engine is not running, because contact with the blade could cause personal injury.

2. Slide L-shaped end of bag rod through hole in lower handle (Fig. 11).

OPERATING INSTRUCTIONS

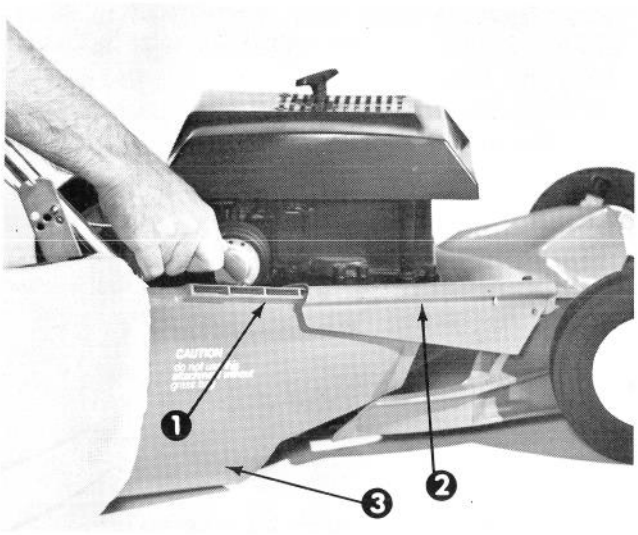

Figure 10
1. Chute Slide
2. Groove
3. Bag Chute



Figure 11
1. Bagging Assembly Installed

3. Hang bag loop onto end of bag rod (Fig. 11). Check bottom of bag, and if it is dragging on the ground, bend the bag rod slightly until clearance between bag and ground results.

4. To remove bag and grass chute, move drive control into DISENGAGE **detent** (self-propelled model) and stop the engine. Raise grass chute by the handle and slide it out of the deflector. Open the zipper to empty the bag and close the zipper before installing the bag and bag chute.

WARNING

The grass bag material will contain and catch the majority of foreign objects, such as small stones and other similar debris. The bag material, however, is subject to normal wear and deterioration. So check the bag frequently, and if it is defective, install a new, genuine TORO replacement bag that has this warning or a similar one.

STARTING/STOPPING THE ENGINE

1. Assure high tension wire is pushed onto spark plug.

2. Move drive control into DISENGAGE **detent** (self-propelled model) and throttle control forward to START position (Fig. 12).



Figure 12
1. Throttle Control in START Position

3. Place foot on step at left side of mower housing and keep other foot from beneath the housing. Pull fingertip starter up until positive engagement results (Fig. 13); then pull vigorously to start the engine.

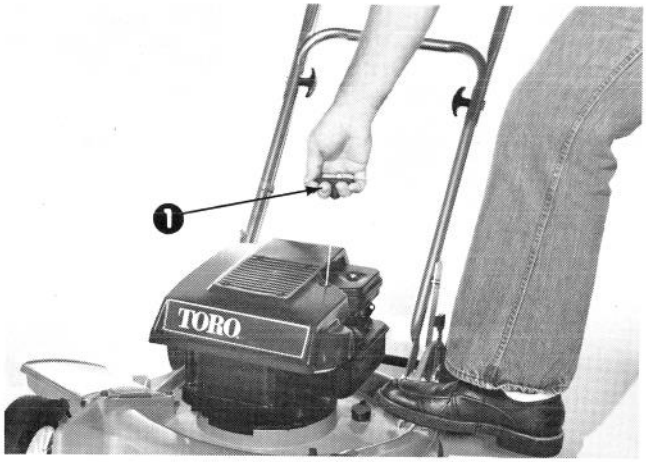

Figure 13
1. Recoil Starter Handle

OPERATING INSTRUCTIONS

IMPORTANT: Do not pull starter rope to its limit or let go of the handle when rope is pulled out because starter mechanism or rope may break.

4. After engine starts, move throttle control to the desired speed.

5. To stop the engine, move traction control into DISENGAGE **detent** (self-propelled model) and throttle control to STOP position. Stay behind the handle until all parts stop moving. Pull high tension wire off spark plug to prevent possibility of accidental starting when mower is unattended or not used.

USING WASH-OUT PORT

After mower is used, underside of mower housing must be cleaned to prevent grass clippings from adhering to the housing. To clean underside of mower housing, use the wash-out port.

1. ⚠ Move drive control into DISENGAGE **detent** (self-propelled model). Stop the engine and wait for all moving parts to stop.

2. Set height-of-cut in the lowest position and open the wash-out port.

3. Start the engine. Insert end of hose, without nozzle, into wash-out port opening (Fig. 14). Using moderate water pressure, allow water and engine to run for approximately two minutes. The action created by the rotating blade and water flushes accumulations of grass clippings from underside of mower housing. When grass is no longer discharged and color of discharged water is clear again, stop the engine. Pull high tension wire off spark plug after all parts stop moving.

Note: Dry bulky accumulations of grass clippings must be removed from underside of housing with a scraper: refer to Cleaning Mower Housing, page 15.

4. Wipe the mower with a clean rag to remove excess water.

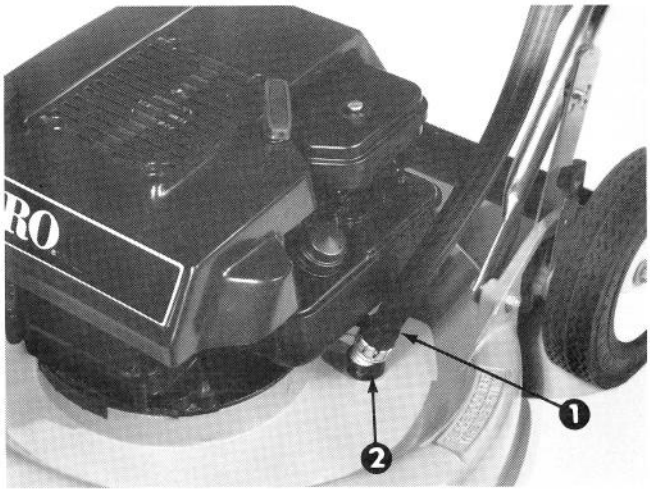

Figure 14
1. Hose Without Nozzle
2. Wash-Out Port

MAINTENANCE

⚠ CAUTION

To reduce potential accidents, never perform an adjustment or maintenance procedure while the engine is running. Pull high tension wire (Fig. 15) off spark plug to prevent an accidental start.

LUBRICATION

Tools required: Clean Rag and Light Machine Oil

1. After every 25 hours of operation or at the end of the mowing season, apply 2 or 3 drops of light oil on the inside of all the wheel bolts (Fig. 16). Spin the wheel to distribute oil into the wheel bushings. Wipe up any excess oil.

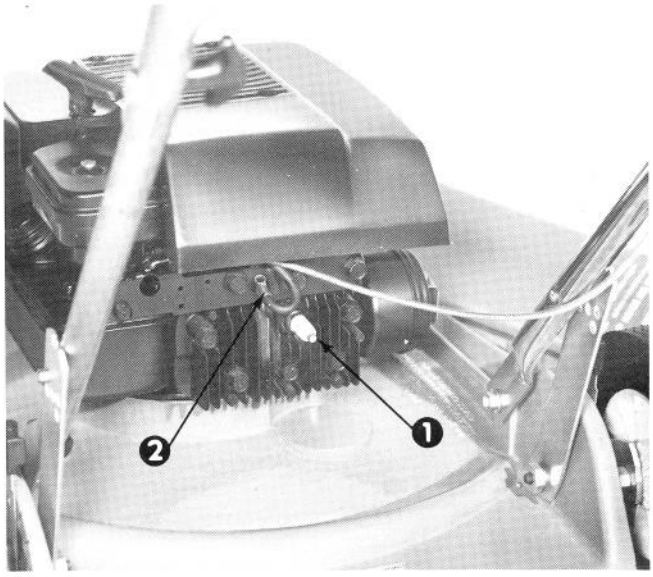

Figure 15
1. High Tension Wire - Install on V Notch
2. Spark Plug

MAINTENANCE

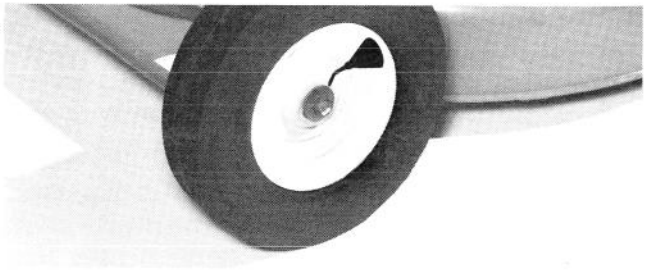

Figure 16

2. The throttle control and drive cables must be lubricated after every 25 hours of operation or at the end of the mowing season, whichever comes first. Apply light oil onto the cable (Fig. 17), especially where it bends. Also, squirt oil onto the cable where it enters the control housing and junction box. Operate the controls to distribute the oil. Wipe up excess oil.



Figure 17

SERVICING AIR CLEANER

Tools Required: Solution of Liquid Soap Detergent and Water, Clean Rag and Engine Oil.

The air cleaner element must be cleaned after every 25 hours of engine operation if the engine is operated in clean air conditions. The element must be cleaned more frequently, however, when mower is operated in dusty or dirty conditions.

1. ⚠ Assure engine is not running, drive control is in DISENGAGE **detent** and high tension wire is pulled off spark plug.

2. Remove screw and cover to expose air cleaner. Remove cover (Fig. 18) and clean dirt from inside and outside surfaces.

3. Look at top of air cleaner element (Fig. 19). If it is dirty, the element must be removed from air cleaner body (Fig. 19), and cleaned.

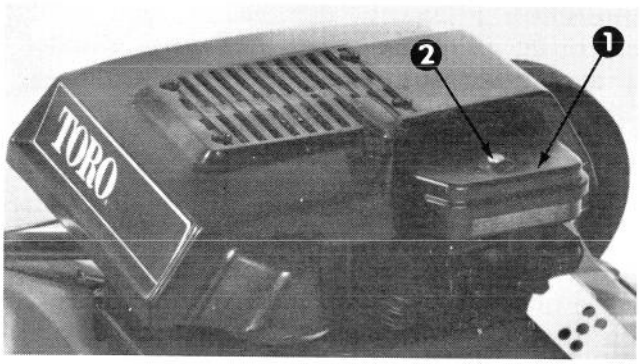

Figure 18
1. Air Cleaner Cover
2. Mounting Screw

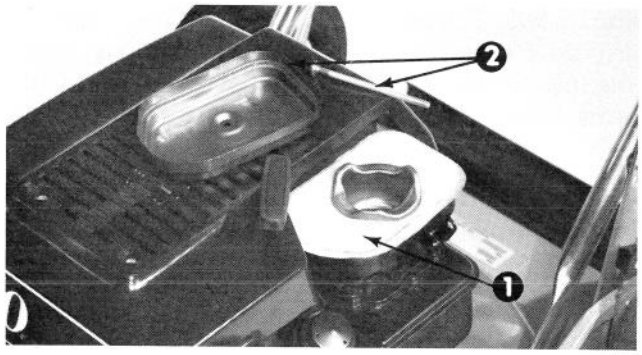

Figure 19
1. Air Cleaner Element
2. Cover, and Mount Screw

A. WASH element in a solution of liquid soap detergent and water. Squeeze the element to remove dirt. Do not twist element because it may tear.

B. DRY the element by wrapping it in a clean rag. Squeeze the rag and element until element is dry.

C. SATURATE the element with 5 teaspoons of SAE 30 oil, and squeeze it to distribute oil thoroughly. A damp element is desirable.

D. Place element and spacer into air cleaner body (Fig. 19). Assure narrow edge of spacer is parallel with side of air cleaner body.

4. Install cover on air cleaner body and assure cover and element form a seal. Mount air cleaner assembly on top of carburetor with long screw (Fig. 19).

IMPORTANT: Do not operate engine without air cleaner element because extreme engine wear and damage will likely result.

REPLACING SPARK PLUG

Tools Required: 13/16-inch Spark Plug Socket, Spark Plug Gapping Tool and Clean Rag.

MAINTENANCE

Recommended spark plug to use is a Champion RJ-8 or equivalent, and correct air gap is 0.030 of an inch (0.76 mm). Since air gap between center and side electrodes of the spark plug increases gradually during normal engine operation, remove plug after every 25 hours of engine operation and check its condition.

1. ⚠ Assure engine is not running, pull high tension wire off spark plug and slide end of wire onto V-shaped notch.

2. Clean area around spark plug so foreign matter does not fall into cylinder when plug is removed. Remove spark plug from cylinder head (Fig. 20).

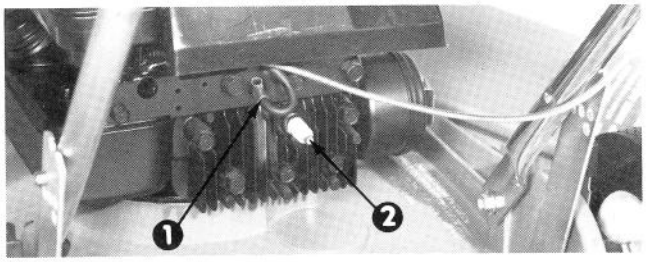

Figure 20
1. High Tension Wire - Install on V Notch
2. Spark Plug

IMPORTANT: A cracked, fouled or dirty spark plug must be replaced. Do not sand blast, scrape or clean electrodes using a wire brush, because grit may eventually release from the plug and fall into the cylinder. The result will likely be engine damage.

3. Set air gap between electrodes at 0.030 of an inch (0.76 mm) (Fig. 21). Install the correctly gapped spark plug with gasket seal and tighten plug to 15 ft-lb (20.4 N·m). If torque wrench is not used, tighten plug firmly.

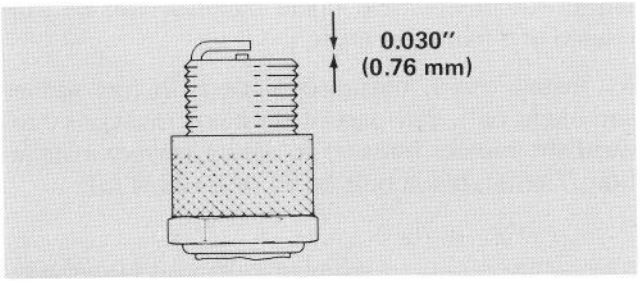

Figure 21

CHANGING CRANKCASE OIL

Tools Required: Clean Rag, Shallow Oil Drain Pan, Small Funnel and 7/16-inch Open End Wrench.

Change oil after the first 2 hours of engine operation, and after every 25 hours thereafter. Since warm oil drains better and carries more contaminants than cold oil, run the engine for a minute or so before changing oil.

1. ⚠ Assure engine is not running and high tension wire is pulled off spark plug.

2. ⚠ Using a pump-type syphon, drain gasoline from fuel tank to prevent a potential hazard.

3. Tip mower on its left side and rotate blade until oil drain plug is exposed (Fig. 22).

4. Clean area around drain plug. Using 7/16-inch open end wrench, remove drain plug (Fig. 22). Gradually tip mower back to its normal position so oil flows into drain pan.

5. After oil is drained, install oil drain plug and tighten it securely. Tip mower back to its normal position.

6. Position mower on a level surface and fill crankcase with oil: refer to Fill Crankcase With Oil, page 7.

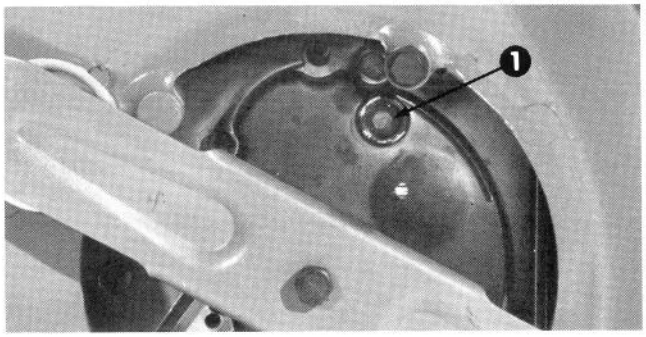

Figure 22
1. Engine Oil Drain Plug

INSPECTING BLADE FOR DAMAGE

Tools Required: None

1. ⚠ Assure engine is not running and high tension wire is pulled off spark plug.

2. ⚠ Using a pump-type syphon, drain gasoline from fuel tank.

3. Tip mower on its left side (Fig. 23).

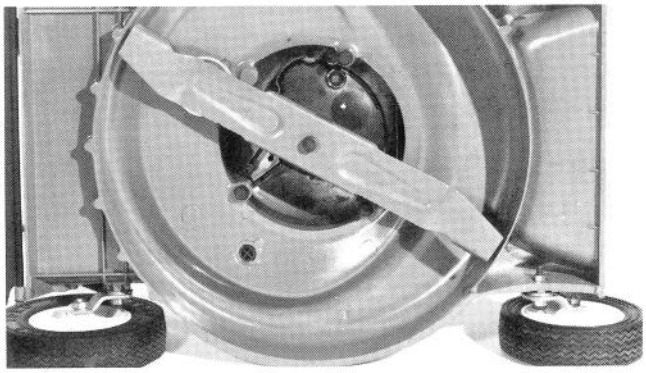

Figure 23

4. Examine cutting ends of the blade carefully, especially where the flat and curved parts of the blade meet (Fig. 24A). Since sand and abrasive material can wear away the metal that connects the flat and curved parts of the blade, check the blade before using the mower. If any wear is noticed (Fig. 24B), replace the blade: refer to Sharpening or Replacing Cutter Blade, page 14.

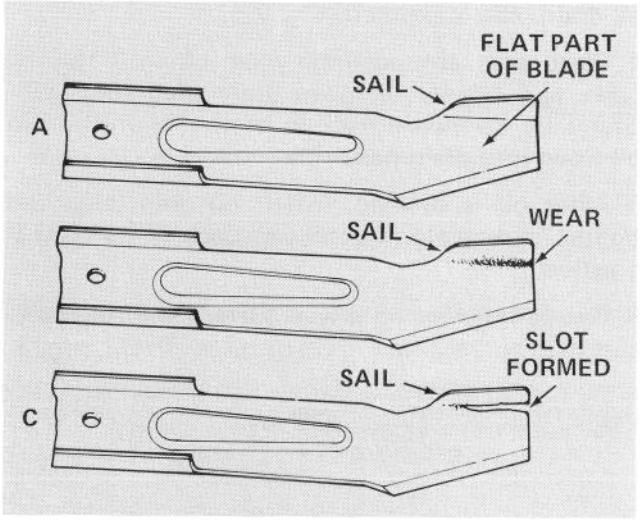

Figure 24

CAUTION

If the blade is allowed to wear, a slot will form between the sail and flat part of the blade (Fig. 24C). Eventually, a piece of the blade may break off and be thrown from under the housing, possibly resulting in serious injury to yourself or bystander.

5. Set mower upright.

SHARPENING OR REPLACING CUTTER BLADE

Tools Required: Clean Rag, 5/8-inch Socket or Wrench, and a File.

1. Assure engine is not running and high tension wire is pulled off spark plug.

2. Using a pump-type syphon, drain gasoline from fuel tank.

3. Tip mower on its left side. Grasp end of blade using a rag or thickly padded glove. Remove blade bolt, lockwasher, and blade (Fig. 25).

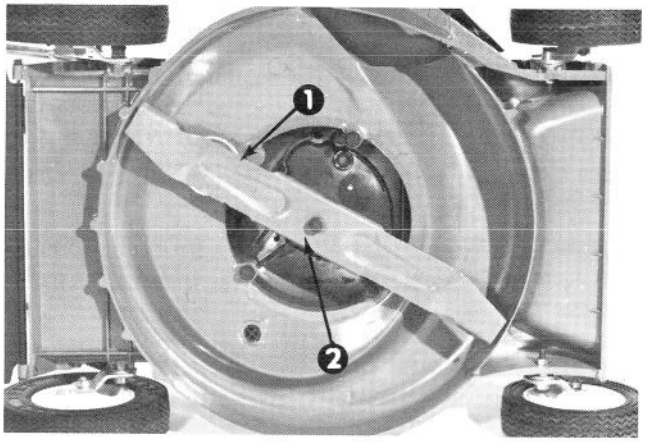

Figure 25

1. Blade
2. Blade Bolt and Lockwasher

Note: To assure optimum cutting performance, install a new blade at the start of the cutting season. During the year, file down small nicks to maintain a fine cutting edge.

4. Using a file, sharpen cutting edge at both ends of the blade (Fig. 26).

IMPORTANT: Sharpen top side of blade and maintain original cutting angle to assure a sharp cutting edge (Fig. 26). The blade will remain balanced if same amount of material is removed from both cutting edges.

5. Check balance of blade by putting it on a blade balancer. A balanced blade will stay in a horizontal position on the balancer. By contrast, a blade that is not balanced will settle to the heavy side. If blade is not balanced, file some metal off heavy "end" of the blade, not off the cutting edge. Then check the blade balance again.

Note: An inexpensive blade balancer can be purchased at a hardware store.

6. Install sharp, balanced blade with lockwasher and blade bolt. Sail part of the blade must point toward the mower housing to assure correct installation. Tighten blade bolt to 50 ft-lb (68 N·m).

7. Set mower upright.

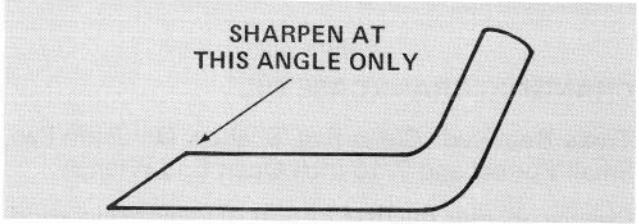

Figure 26

1. Blade Sharpening Angle

MAINTENANCE

CLEANING MOWER HOUSING

Tools Required: Wooded Scraper

To assure a good cut and efficient grass bagging, the underside of mower housing must be kept clean.

1. ⚠ Assure engine is not running and high tension wire is pulled off the spark plug.

2. ⚠ Using a pump-type syphon, drain gasoline from fuel tank.

3. Tip mower on its left side (Fig. 27). Remove grass clippings and dirt that sticks to the housing by spraying it with a garden hose. Scrape out any grass that water does not remove from housing.

4. Set mower upright.

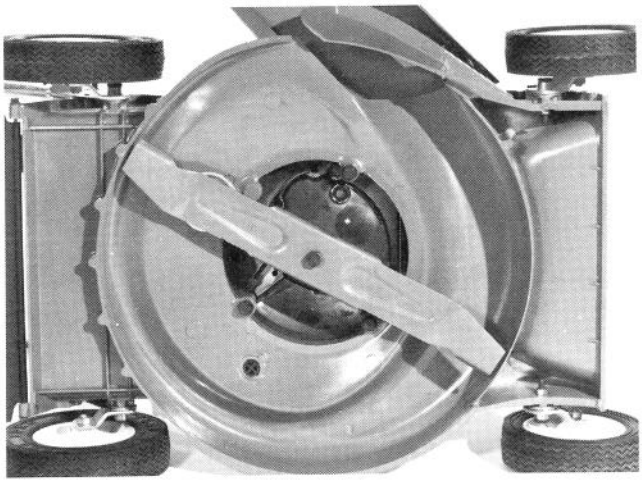

Figure 27

ADJUSTING THROTTLE CONTROL

Tools Required: Screwdriver

An adjustment of the throttle control may be required if the engine does not start or stop. Whenever a new throttle control cable assembly is installed, the throttle must be adjusted.

1. ⚠ Assure engine is not running and high tension wire is pulled off the spark plug.

2. Move throttle control lever to the STOP position, remove screws securing cover to engine and remove cover.

3. Loosen cable clamp screw until throttle cable is free to slide (Fig. 28).

4. Move carburetor control arm to the right until it contacts grounding bracket (Fig. 28). Pull throttle cable slightly to remove any slack, and tighten the cable clamp screw to lock the adjustment in place.

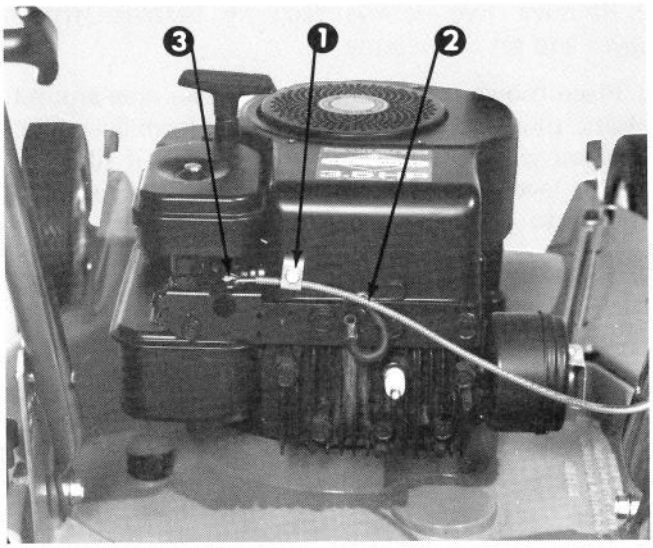

Figure 28

1. Cable Clamp Screw
2. Cable
3. Control Arm

5. Install cover over engine.

CHECKING GEAR CASE

Tools Required: Screwdriver, 1/2 inch Box End Wrench, Quantity of SAE 80 W/90 E.P. API Class GL-5, GL-6 Gear Oil.

The gear case is filled with oil and sealed at the factory. However, check gear case periodically for oil leaks between sides of case and axle (Fig. 29). If oil leak is excessive or continuous, have mower inspected by an Authorized TORO Service Dealer.

Slight leakage may be occurring which will not be obvious. Therefore, check the oil level in the gear case at least every 25 hours of operation.

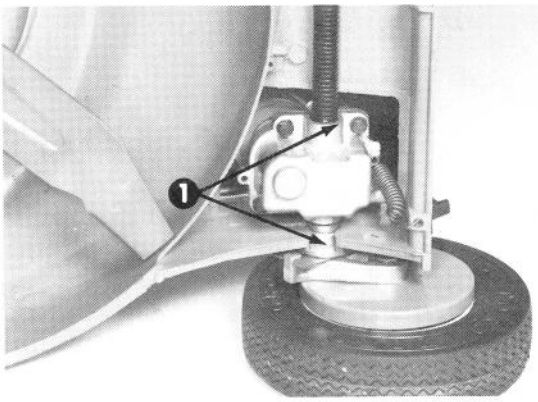

Figure 29

1. Check Here

1. ⚠ Disconnect high tension wire from the spark plug and install end in notched hole.

2. Remove two screws securing POW-R-DRIVE cover and set cover aside.

3. Place mower on level surface, clean area around plastic plug and remove plastic plug from gear case. Gear oil will flow out hole in gear case if filled to proper level (Fig. 30). If no gear oil is evident add gear oil to gear case: proceed to item 4.

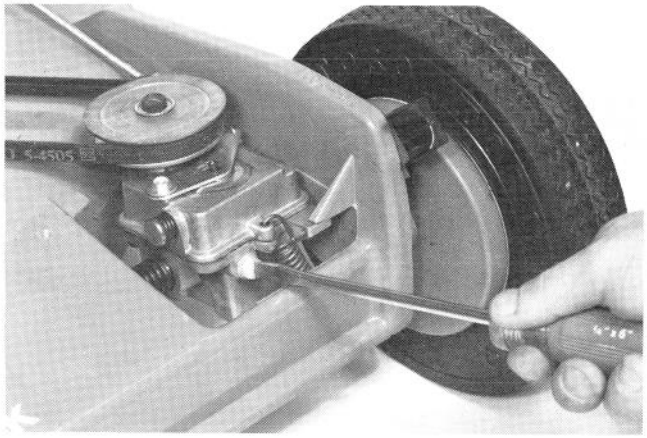

Figure 30

4. Add gear oil to gear case through oil level check hole until gear oil leaks out when gear case is level (Fig. 31).



Figure 31

Note: Only the gear oil recommended should be used. Substitute gear oil will cause premature failure of the gear case components. A Plews type oil container or any other container with a small tip can be used for installation of gear oil. Clean the container thoroughly before filling with gear oil to avoid contaminating gear case.

5. Install plastic plug. Take care not to over-tighten so plug threads will not strip out.

6. Install belt, POW-R-DRIVE cover and set height-of-cut to desired setting.

ADJUSTING DRIVE CONTROL

Tools Required: 5/16 Inch Socket and Screwdriver.

If drive control does not engage or disengage the front wheels, an adjustment may be required.

1. ⚠ Assure engine is not running and high tension wire is pulled off spark plug.

2. Remove two screws holding POW-R-DRIVE COVER (Fig. 32) and put cover aside.

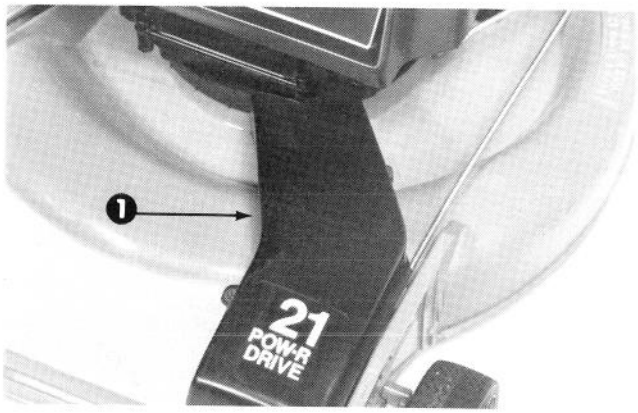

Figure 32

1. Front Drive Cover Installed

3. Loosen cable retaining screw until control cable is free to slide (Fig. 33).

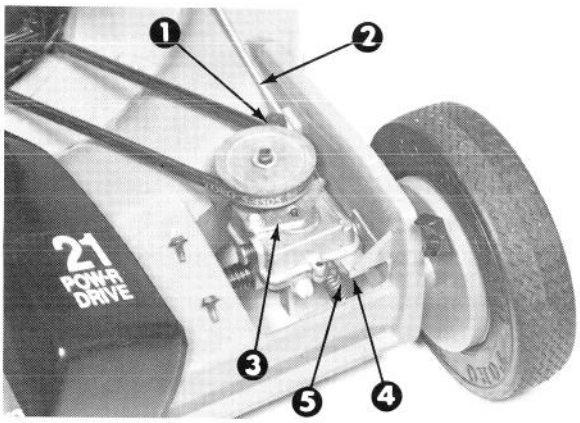

Figure 33

1. Retaining Screw
2. Cable
3. Arm
4. Stop Screw
5. Tab

4. Move the drive control backward into the DISENGAGE **detent.**

5. Push shifter arm backward until it stops and hold shifter in place. Pull control cable and wire backward to remove all slack, and secure cable in place by tightening the cable retaining screw (Fig. 33).

6. Adjust the traction lockout: refer to Adjusting Recoil Traction Lockout, page 17.

7. Install POW-R- DRIVE cover with two screws.

ADJUSTING RECOIL TRACTION LOCKOUT

Tools Required: Screwdriver.

The recoil lockout mechanism (Fig. 34) on the left side of engine, in conjunction with the drive control, disengages the recoil starter so the engine cannot be started when drive control is in the ENGAGE position. Unless the control cable ever breaks and is replaced, an adjustment should not be required.

1. ⚠ Assure engine is not running and high tension wire is off spark plug.

2. Move drive control into DISENGAGE **detent.**

3. Loosen cable clamp screw until control cable is free to slide (Fig. 34).

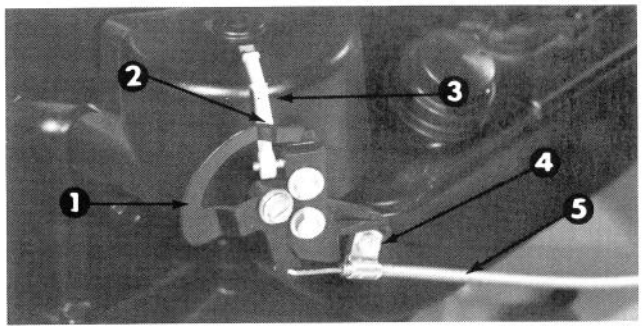

Figure 34

1. Cam Lever
2. Contact Point
3. Interlock Arm
4. Clamp and Screw
5. Cable

4. Pull recoil handle up slowly until inter lock arm moves outward, and hold recoil in this position so arm stays out (Fig. 34).

5. Move cam lever until inter lock arm contacts the "V" on inside of the cam lever (Fig. 34). Maintain cam lever and interlock arm position and release the recoil handle; then tighten cable clamp screw (Fig. 34).

6. Test the adjustment by moving traction control to ENGAGE. Pull recoil starter slowly: it must be very easy to pull and engine must not turn over. If engine turns over, repeat the adjustment.

ADJUSTING CARBURETOR

Tools Required: Screwdriver

The carburetor has been set at the factory, but an occasional adjustment may be required. However, do not make unnecessary carburetor adjustments because factory settings are usually correct. An adjustment may be required to compensate for differences in fuel, temperature and altitude.

IMPORTANT: Air cleaner must be installed on the engine whenever carburetor is adjusted. The air cleaner mounting screw must also be installed when engine is run. Fuel tank must be half full of gasoline to get best carburetor adjustment.

Note: The cover over the engine can be removed to gain better access to carburetor.

1. Needle Valve (Fig. 35)– Close valve by gently rotating it clockwise.

IMPORTANT: Do not close needle valve too tight because valve and seat in carburetor could be damaged.

2. Rotate – open – needle valve 1-1/2 turns counterclockwise.

Note: The needle valve setting is an approximate; however, the setting will allow engine to be started so carburetor can be fine tuned – steps 3-9.

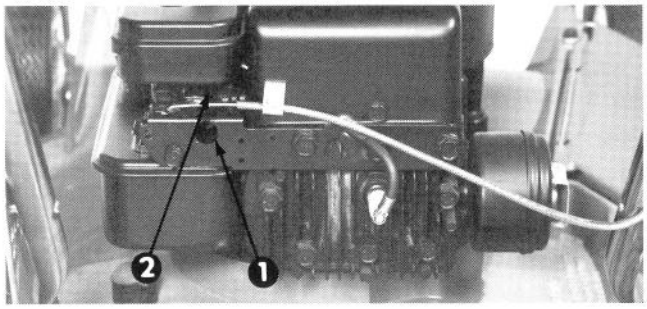

Figure 35

1. Needle Valve
2. Idle Adjusting Screw

⚠ **WARNING**

Engine must be running so final adjustment of the carburetor can be performed. To guard against possible personal injury, keep hands, feet, face, and other parts of the body away from the cutter blade, underside of the housing, and the discharge chute.

3. Start engine and let it warm up for approximately two minutes. Move throttle control to START position.

4. Rotate needle valve (Fig. 35) clockwise, 1/8 turn at a time, until engine starts to lose speed. Let engine react to each 1/8 turn setting.

5. Rotate needle valve (Fig. 35) counterclockwise-out – 1/8 turn at a time, until engine first starts to run rough. Let engine react to each 1/8 turn setting.

6. Rotate needle valve (Fig. 35) clockwise – in – very slowly until engine starts to run smoothly. This setting, under no load, may be slightly rich; however, the slightly rich setting will assure proper operation when engine is under load.

7. Move throttle control backward so engine idles. Rotate idle adjusting screw (Fig. 35) until engine speed is 1750 rpm.

Note: Rotate idle adjusting screw clockwise to increase idle rpm and counterclockwise to decrease idle rpm.

8. Check carburetor adjustment by quickly moving throttle control from idle speed to START position. Engine speed should increase without hesitation. If engine tends to stall or die out, rotate needle valve 1/8 turn counterclockwise until engine accelerates smoothly.

9. ⚠ After carburetor is adjusted, stop the engine. If mower will not be used immediately, pull high tension wire off spark plug: accidental starting will be prevented.

PREPARING MOWER FOR STORAGE

1. Using a pump type syphon, drain gasoline from fuel tank. After gasoline is drained, start engine and let it run at idle speed until it stops because all gasoline is used.

Note: All gasoline must be expended to prevent gum-like varnish deposits from forming in the carburetor, fuel line and fuel tank. Such deposits, if allowed to form, will cause starting problems and poor engine operation.

2. Pull high tension wire off spark plug and clean area around the plug so foreign matter cannot fall into cylinder when plug is removed. Remove plug from cylinder head and pour two tablespoons of SAE 30 oil into spark plug hole. Pull recoil starter handle slowly to distribute oil on inside of cylinder. Then install spark plug and tighten it to 15 ft-lb (20.4 N·m). If torque wrench is not used, tighten plug firmly. DO NOT INSTALL HIGH TENSION WIRE ON SPARK PLUG.

3. Drain oil form crankcase: refer to Changing Crankcase Oil, steps 1-5, page 13. However, do not fill crankcase with oil at this time.

4. Clean dirt and chaff from outside of cylinder, cylinder head fins and blower housing. Also, remove grass clippings, dirt, and grime from external parts of engine, shrouding and top of mower housing.

5. Clean underside of mower housing: refer to Cleaning Mower Housing, page 15.

6. Check condition of blade and blade capscrew: refer to Inspecting Blade for Damage, page 13.

7. Check and tighten all capscrews, bolts, screws, nuts and mating parts. If any part is damaged, repair or replace it.

8. Lubricate wheel bushings, drive cable (self-propelled model) and throttle cable with oil: refer to Lubrication, page 12.

9. Wash the air cleaner element in liquid soap detergent and water: refer to Servicing Air Cleaner, page 12.



Figure 36

10. Fill crankcase with oil: refer to Fill Crankcase With Oil, page 7.

11. "Touch-up" all rusted or chipped paint surfaces. Make sure to sand affected area before painting.

Note: TORO Re-Kote "touch-up" paint is available from any Authorized TORO Service Dealer. The spray paint dries in minutes to a glossy factory-finish.

12. Store the mower in a clean, dry place. For convenience, upper handle can be folded for more compact storage (Fig. 36). Cover the mower to protect it and keep it clean.

TROUBLE SHOOTING

Problem	Possible Causes	Corrective Action
Engine does not start	1. Throttle not in start position. 2. Gas tank is empty. 3. Spark plug loose. 4. High tension wire loose or disconnected from spark plug. 5. Spark plug gap is incorrect. 6. Spark plug is defective. 7. Blade bolt is loose. 8. Faulty points or condenser.	1. Move throttle to start. 2. Fill fuel tank with gasoline: refer to Fill Fuel Tank with Gasoline, page 7. 3. Tighten spark plug to 15 ft-lb (20.4 N·m). 4. Install high tension wire on plug. 5. Set gap between electrodes at 0.030 of an inch (0.76 mm). 6. Install new, correctly gapped plug: refer to Replacing Spark Plug, pages 12-13. 7. Tighten blade bolt to 50 ft-lb (68 N·m). 8. Contact TORO Service Dealer.
Engine starts hard or loses power.	1. Dirt or water in gas tank. 2. Vent hole in fuel tank cap is plugged. 3. Air cleaner is dirty. 4. Blade bolt is loose.	1. Drain gas and clean fuel tank. Fill tank with clean, fresh gasoline: refer to Fill Fuel Tank With Gasoline, page 7. 2. Clean or replace fuel tank cap. 3. Clean air cleaner element: refer to Servicing Air Cleaner, page 12. 4. Tighten blade bolt to 50 ft-lb (68 N·m).
Engine operates erratically or idles poorly.	1. Spark plug is defective. 2. Spark plug gapped incorrectly. 3. Air cleaner is dirty. 4. Oil level in crankcase is low. 5. Air slots in engine shroud are plugged. 6. Cooling fins and air passages under engine blower housing are plugged.	1. Install new, correctly gapped plug: refer to Replacing Spark Plug, pages 12-13. 2. Set gap between electrodes at 0.030 of an inch (0.76 mm). 3. Clean the air cleaner element: refer to Servicing Air Cleaner, page 12. 4. Add oil to crankcase: refer to Fill Crankcase With Oil, page 7. 5. Remove obstruction from slots. 6. Remove obstruction from cooling fins and air passages.
Engine skips at high speed.	1. Air gap between electrodes of spark plug is too close.	1. Set air gap at 0.030 of an inch (0.76 mm).
Engine overheats.	1. Cooling air flow is restricted. 2. Oil level in crankcase is low. 3. Incorrect spark plug.	1. Remove any obstuction from slots in shroud, blower housing, air passages, and cooling fins on engine. 2. Add oil to crankcase: refer to Fill Crankcase With Oil, page 7. 3. Install Champion® RJ8 spark plug that is gapped at 0.030 of an inch (0.76 mm).
Mower vibrates abnormally.	1. Blade bolt is loose. 2. Cutter blade is unbalanced.	1. Tighten blade bolt to 50 ft-lb (68 N·m). 2. Sharpen cutter blade and check the balance: refer to Sharpening or Replacing Cutter Blade, page 14. Replace the blade if it cannot be balanced.

The Toro Promise

A One Year Limited Warranty

The Toro Company promises to repair any TORO Product if defective in materials or workmanship. The following time periods from the date of purchase apply:

Residential Product . . . . . 1 Year
Residential Products Used Commercially . . . . . 45 Days

The costs of parts and labor are included, but the customer pays the transportation costs. Just return any residential product to an Authorized TORO Service Dealer or TORO Distributor.

Should you feel your TORO is defective and wish to rely on The Toro Promise, the following procedure is recommended:

1. Contact any Authorized TORO Service Dealer, TORO Master Service Dealer, or TORO Distributor (the Yellow Pages of your telephone directory is a good reference source).
2. He will either instruct you to return the product to him or recommend another Authorized TORO Service outlet which might be more convenient.
3. Bring the product along with your original sales slip, or other evidence of purchase date, to the service dealer.
4. The servicing dealer will inspect the unit, advise you whether the product is defective and, if so, make all repairs necessary to correct the defect without extra charge to you.

If for any reason you are dissatisfied with the dealer's analysis of the defect or the service performed, you may contact us.

Write:

TORO Customer Service Department
8111 Lyndale Avenue South
Minneapolis, Minnesota 55420

The above remedy of product defects through repair by an Authorized TORO Service Dealer is the purchaser's sole remedy for any defect.

THERE IS NO OTHER EXPRESS WARRANTY. ALL IMPLIED WARRANTIES OF MERCHANTABILITY AND FITNESS FOR USE ARE LIMITED TO THE DURATION OF THE EXPRESS WARRANTY.

Some states do not allow limitation on how long implied warranty lasts, so the above limitation may not apply to you.

This Warranty applies only to parts or components which are defective and does not cover repairs necessary due to normal wear, misuse, accidents, or lack of proper maintenance. Regular, routine maintenance of the unit to keep it in proper operating condition is the reponsibility of the owner.

All warranty repairs reimbursable under The Toro Promise must be performed by an Authorized TORO Service Dealer using Toro approved replacement parts.

Repairs or attempted repairs by anyone other than an Authorized TORO Service Account are not reimbursable under The Toro Promise. In addition, these unauthorized repair attempts may result in additional malfunctions, the correction of which is not covered by warranty.

The Toro Company is not liable for indirect, incidental or consequential damages in connection with the use of the product including any cost or expense of providing substitute equipment or service during periods of malfunction or non-use.

Some states do not allow the exclusion of incidental or consequential damages, so the above exclusion may not apply to you.

This warranty gives you specific legal rights, and you may also have other rights which vary from state to state.

COMPLIANCE WITH RADIO INTERFERENCE REGULATIONS CERTIFIED
CERTIFIE CONFORME AU REGLEMENT SUR LE BROUILLAGE RADIOELECTRIQUE

Litho in U.S.A.