FORM NO. 3318–631

TORO®

MODEL NO. 04497

INSTALLATION INSTRUCTIONS

LEAK DETECTOR KIT
For Greensmaster 3200/3200D

1. Remove hydraulic cap, cap tether retaining bolt, and washer from main hydraulic tank (Fig. 1).

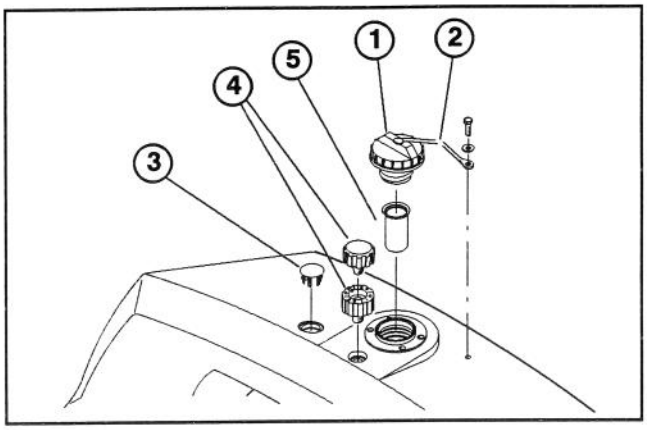

Figure 1

1. Hydraulic cap
2. Tether
3. Insert plug
4. Breather & extension
5. Filler screen

2. Remove plastic insert plug from main hydraulic tank (Fig. 1).

3. Remove pipe plug from top of auxiliary tank (Fig. 2)

4. Remove breather and breather extension from top of main hydraulic tank (Fig. 1).

5. Install breather and breather extension into top of auxiliary tank and pipe plug into top of main hydraulic tank (Fig. 3).

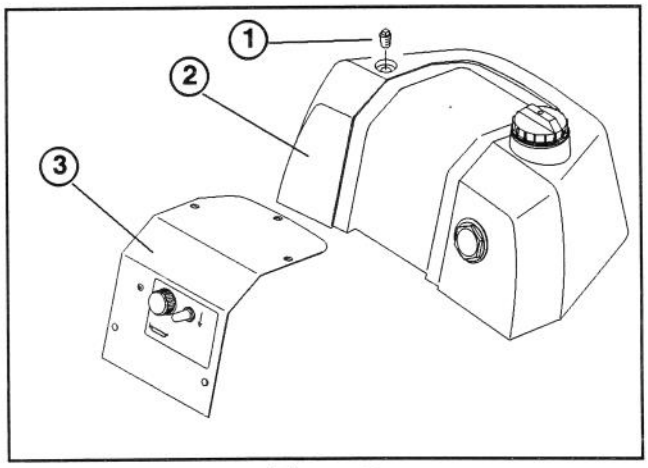

Figure 2

1. Pipe plug
2. Cover plate
3. Auxiliary hydraulic tank

6. Top off main hydraulic tank to within 1" of top of fill neck with hydraulic fluid. Refer to Traction Unit Operator's Manual for correct hydraulic fluid.

7. Remove filler screen (Fig. 1) and place in neck of auxiliary tank.

8. Remove (5) capscrews and washers securing cover plate to auxiliary hydraulic tank (Fig. 2). Remove cover from tank.

9. Remove and discard (4) locknuts from bottom of manifold block (Fig. 3).

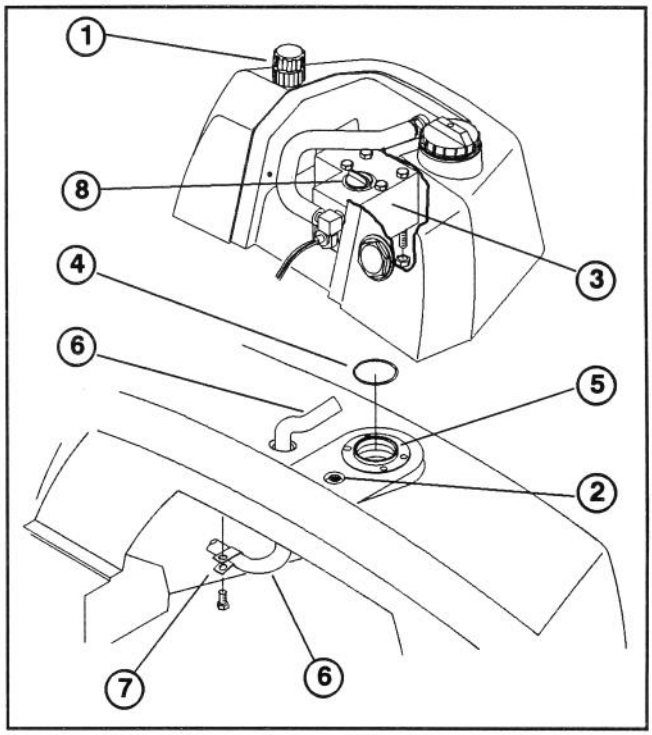

Figure 3

1. Breather & extension
2. Pipe plug
3. Manifold block
4. O–ring
5. Main tank fill neck
6. Wire harness
7. R–clamp
8. Block fill cap

10. Remove (4) protective insert plugs from main tank fill neck. Clean mating surfaces of block and fill neck with a clean, dry rag. Carefully place O–ring from loose parts over fill neck boss.

11. Route wire harness through access hole in main tank and align manifold block with fill neck as shown in figure 3.

12. Secure (4) manifold block mounting capscrews to main tank fill neck.

13. Locate plugged 2–pin connector with yellow/orange and black wires in main tractor harness. Remove plug from main wire harness and attach leak detector harness.

© The TORO Company – 1996

14. Secure leak detector harness to underside of auxiliary tank with R–clamp and 6 mm capscrew as shown in figure 3.

15. Remove fill cap from top of manifold block (Fig. 3). Carefully fill the float cavity to within 1" of top of threads. Do not overfill. Replace and tighten fill cap.

16. Before reattaching cover plate, test leak detector switch (Fig. 4) with main tractor key switch in "on/run" position. Buzzer should sound with toggle switch held in the down position for 1 second.

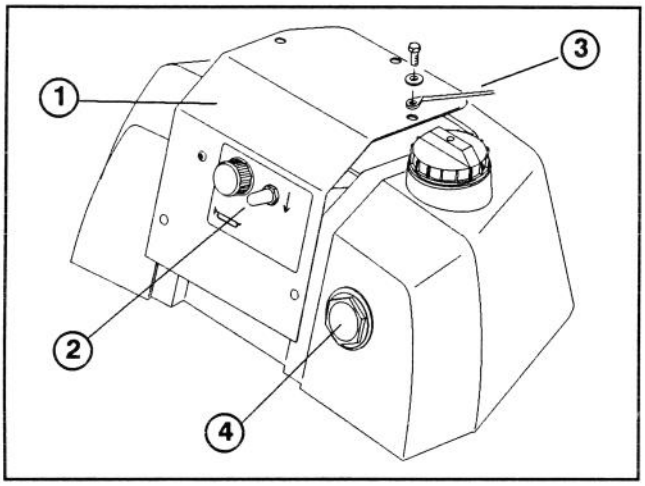

Figure 4

1. **Cover plate**
2. **Leak detector switch**
3. **Cap tether**
4. **Sight gauge**

17. If buzzer fails to sound, check to see if main tractor key switch is in "on/run" position, all connections are secure and test switch is held for 1 full second.

18. Assemble cover plate to auxiliary tank with fasteners previously remove and secure cap tether (Fig. 4) under nearest hole to fill neck.

19. Fill auxiliary tank to top of sight glass (Fig. 4).

NOTE: Monitor hydraulic fluid level in sight glass and as air is removed from the hydraulic circuit, auxiliary tank may need to be topped off after initial fill.

IMPORTANT: If a leak occurs or oil is removed from the hydraulic system for service, the lost oil must be replaced. If a large amount of oil is lost, remove auxiliary tank cover plate and follow steps 15–19 for refilling instructions. For small amounts of oil, simply add oil to auxiliary tank.

CHECK LEAK DETECTOR OPERATION

(Fig. 5–8)

The TURF GUARDIAN™ leak detector system is designed to assist in early detection of hydraulic oil system leaks. If the oil level, in the main hydraulic reservoir, is lowered by 4 to 5 ounces, the float switch in tank will close. After a 1 second delay the alarm will sound, alerting the operator. Expansion of oil, due to normal heating during machine operation, will cause oil to transfer into the auxiliary oil reservoir. The oil is allowed to return to the main tank when the ignition switch is turned off .

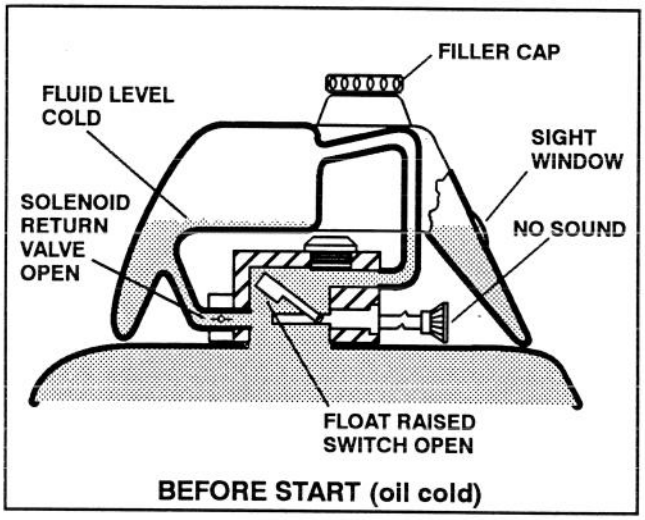

Figure 5

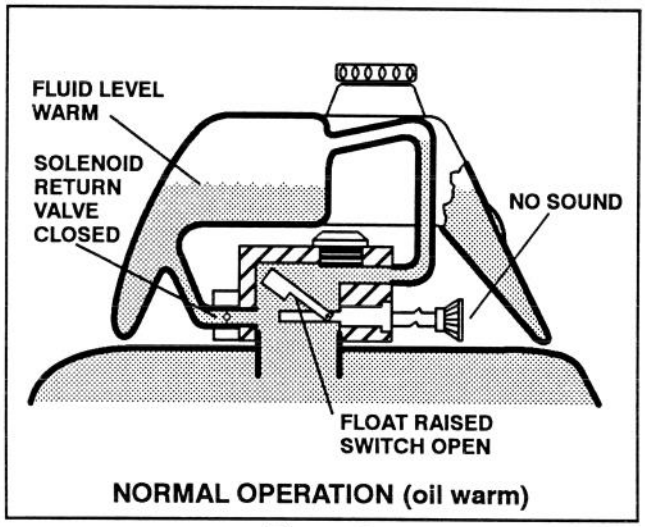

Figure 6

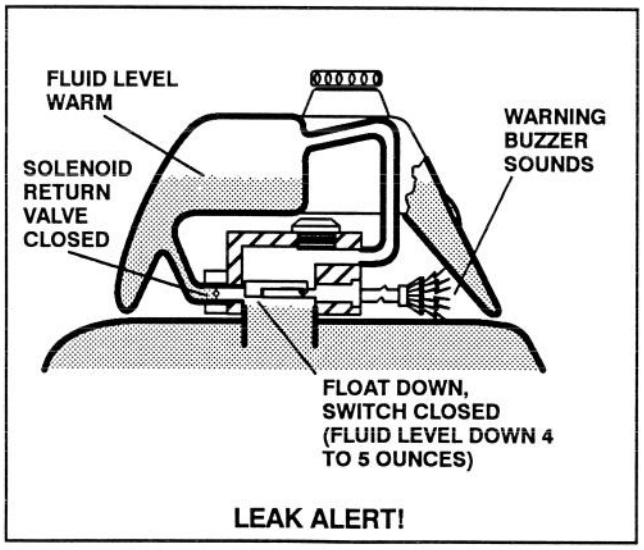

Figure 7

To check system operation

A. With ignition switch in the "ON" position, move Leak detector switch downward and hold. After the one second time delay elapses the alarm should sound.

B. Release leak detector switch.

To check leak detector system operation

A. Move ignition switch to "ON" position. DO NOT START ENGINE.

B. Remove cover plate from leak detector.

C. Remove fill cap from manifold block.

D. Insert a clean rod or screw driver into manifold block and gently push down on switch float (Fig. 8). Alarm should sound after one second delay.

E. Release float, alarm should stop sounding.

F. If alarm fails to stop sounding, turn ignition switch to "OFF" position and locate solenoid on leak detector. Swap solenoid wires and repeat steps A thru E.

G. Install manifold block fill cap and cover plate. Move ignition switch to "OFF" position.

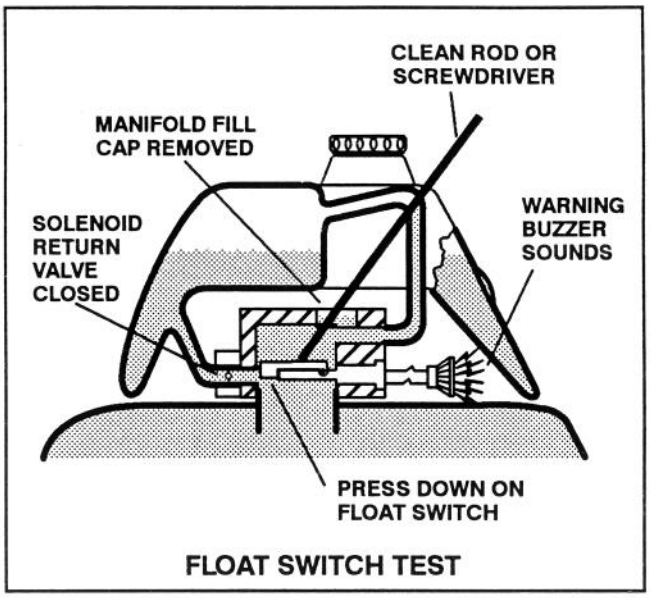

Figure 8


TORO®