FORM NO. 3320-311

ENGLISH

TORO®

Power Shovel

- Squeeze Grip Control Handle
- Easy To Use and Store
- Rugged Toro Design
- Toro Quality
- Work Saving



MODEL 38315-2000001 & UP

Printed in U.S.A.



FOREWORD

The Power Shovel is an outstanding product for snow removal with advanced concepts in engineering design and safety: and if maintained properly, the Power Shovel will be reliable.

The Power Shovel is a high-quality product and Toro is concerned about the future use of the product and the safety of the user. Therefore, read this entire manual to familiarize yourself with the safety instructions and product. The five major sections of the manual are:

1. Safety Instructions
2. Assembly Instructions
3. Operating Instructions
4. Maintenance
5. Parts Listing

Note that the safety information in this manual is emphasized and worthy of special attention. The words CAUTION, WARNING and DANGER identify safety related information.

If help concerning assembly, operation, maintenance or safety is ever needed, contact the local Authorized TORO Service Dealer.



Table of Contents

Safety Instructions 1-2
Assembly Instructions 2-4
Controls 5
Operating Instructions 6
Maintenance 7-8
Replacing Rotor 7
Replacing Scraper 7-8
Preparing for Storage 8
Parts Catalog 8-9

COPYRIGHT © ALL RIGHTS RESERVED
The Toro Company — 1981
MINNEAPOLIS, MN 55420 — U.S.A.

OPERATOR'S MANUAL

Safety Instructions

To assure maximum safety, optimum performance and to gain knowledge of the product, **it is essential that you or any other operator of the Power Shovel read and understand the contents of this manual before the motor is ever started.** Pay particular attention to the safety alert symbol which means CAUTION, WARNING or DANGER – "Personal Safety Instructions". Read and understand the instruction because it has to do with safety. Failure to comply with the instruction may result in personal injury.

1. Read and understand the contents of this manual before operating the machine. Become familiar with all controls and know how to stop quickly.

2. Wear adequate winter clothing. Do not wear loose fitting clothes that could possibly get caught in moving parts.

3. Inspect the Power Shovel. Repair or replace any defective or damaged parts.

4. To prevent electric shock, use only an approved extension cord, suitable for outdoor use in cold temperatures. If the cord is damaged, do not use and replace immediately.

5. Inspect area thoroughly where the Power Shovel will be used. Remove foreign objects which might be picked up and thrown by the Power Shovel.

6. Do not use the Power Shovel on gravel or crushed rock surfaces unless used in accordance with Operator's Instructions; refer to page 6.

7. Avoid accidental starting. Do not transport Power Shovel while plugged in.

8. Keep everyone, especially children and pets, away from area of operation. Never allow children under the age of 16 to operate the Power Shovel.

9. Operate the Power Shovel only when there is good visibility. Maintain secure footing, stay alert, and keep a firm grip on the handle. DO NOT USE THE POWER SHOVEL ON A ROOF.

10. STAY AWAY FROM THE DISCHARGE OPENING WHILE OPERATING THE POWER SHOVEL. Keep face, hands, feet and any other part of the body or clothing away from concealed, moving or rotating parts.

11. If a solid object is hit or the Power Shovel vibrates abnormally, stop the Power Shovel and wait for all movement to stop. Disconnect extension cord and check the Power Shovel immediately for possible damage, an obstruction or loose parts. Vibration is generally a warning of trouble. Repair any damage before operating the Power Shovel again.

12. Disconnect cord from receptacle if the Power Shovel will be left unattended.

13. Before unclogging the discharge area, cleaning, inspecting or repairing, stop the Power Shovel and wait for all moving

Safety Instructions

parts to stop. Also, disconnect cord from receptacle to prevent accidental starting.

14. Perform only those maintenance instructions described in this manual. Disconnect cord from receptacle before performing maintenance procedures prevent possibility of accidental start.

15. Store Power Shovel indoors when not in use in a dry, safe place out of reach of children.

Assembly Instructions

"READ ALL ASSEMBLY INSTRUCTIONS BEFORE STARTING ASSEMBLY".

ASSEMBLE HANDLE

Tools Required: Phillips Screw Driver, Plastic Rod (included in loose parts bag)

1. Remove Power Shovel and loose parts from carton.

2. Remove and discard the grommet from inside the upper handle (Fig. 1).

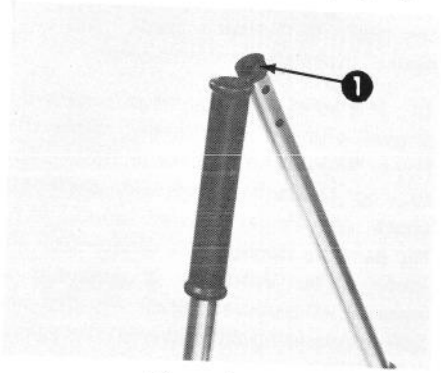

Figure 1

1. **Grommet**

3. Remove the handle screws and plastic handle nuts from the center handle grip (Fig. 2).

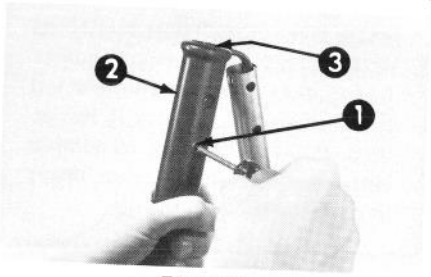

Figure 2

1. **Handle Screw**
2. **Plastic Handle Nut (not shown)**
3. **Center Handle Grip**

4. Lay handle assembly onto flat surface. Slide center handle grip off lower hand and onto upper handle (Fig. 3).

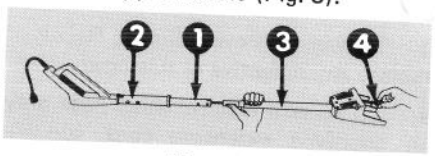

Figure 3

1. **Upper Handle**
2. **Center Handle Grip**
3. **Lower Handle**
4. **Handle Connector**

5. Align upper and lower handles. Hold handle connector with one hand and slide lower handle into mounting position in upper handle with other hand (Fig. 3).

Assembly Instructions

n holes. Slide plastic center handle position and align with holes in handles.

NOTE: Be sure the power plug end of handle grip and slot in plastic center handle grip face towards the rear of unit as shown in picture on front cover.

WARNING

DO NOT INSERT HANDLE SCREW THROUGH HANDLE UNTIL PLASTIC HANDLE NUT HAS BEEN PROPERLY INSTALLED. IF HANDLE SCREW IS NOT PROPERLY INSTALLED, SUPPLY CORD COULD BECOME DAMAGED AND CAUSE PERSONAL INJURY DURING OPERATION.

6. Insert plastic rod (supplied in loose ts bag) through round center handle hole and gently move electric supply cord to one side.

7. Insert plastic handle nut into hex hole in center handle-grip. Carefully push nut through handle and seat hex head in matching recessed center handle grip hole; hold in place.

8. Using fingers only, insert the handle screw into the plastic handle nut and rotate to start the threads. USE NO TOOLS UNTIL THE HANDLE SCREW IS PARTIALLY THREADED INTO THE PLASTIC HANDLE NUT.

9. Using a Phillips screw driver, tighten the handle screw while holding plastic handle nut in place (Fig. 4).

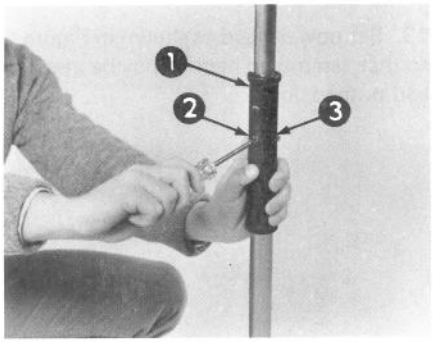

Figure 4

1. **Center Handle Grip**
2. **Handle Screw**
3. **Plastic Handle Nut (not shown)**

10. Repeat steps 6 through 9 to install the second nut and screw.

11. Lay the power head and handle on a flat surface in the manner shown in Figure 5.

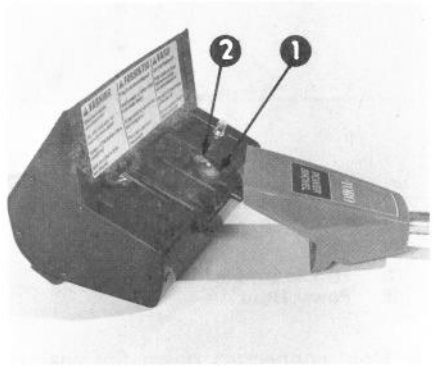

Figure 5

1. **Handle Connector**
2. **Power Head Connector**

Assembly Instructions

12. Assemble the power head connector and the handle connector by sliding the connectors together (Fig. 5).

13. Set power head as shown in Figure 6 so that assembled handle may be inserted and pushed down.

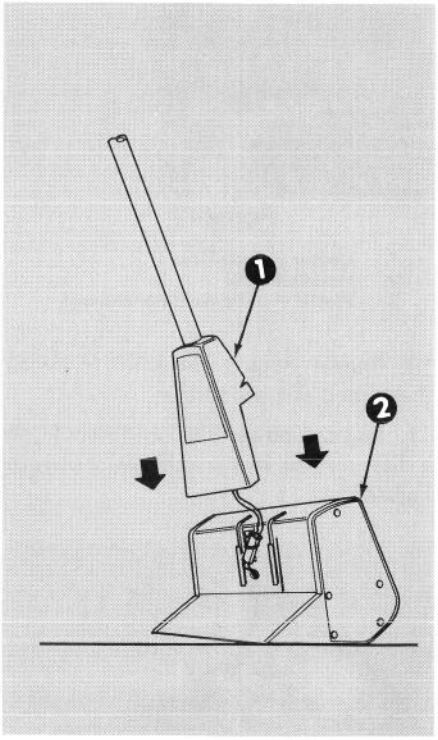

Figure 6

1. **Handle Support**
2. **Power Head**

14. Hold connectors down flat against power head and slide the handle support over the power head. Be sure the grooves in the handle support and power head are interlocked (Fig. 7) and the power sup cord is properly positioned.



Figure 7

IMPORTANT: If the handle support does not slide completely into position, check the supply cord to be sure it is not interfering with assembly. If necessary, move the cord to eliminate interference and be sure it rests on the right side between the handle support and power head.

15. Insert a 1/4" x 1" screw in the threaded slot in the rear of the handle support (Fig. 8) and screw into pla Repeat with second screw.

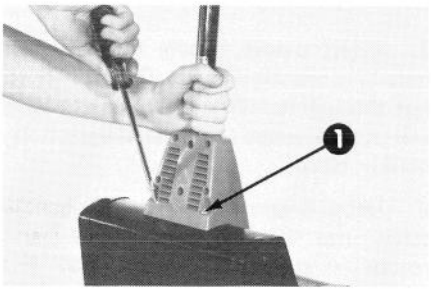

Figure 8

1. **Screw**

Know Your Controls



1. Switch Bar
2. Electric Supply Cord
3. Center Handle Grip
4. Reset Button

Operating Instructions

STARTING/STOPPING

To start the Power Shovel, squeeze the switch bar; to stop, release the switch bar. The Power Shovel is equipped with an automatic shut-off. Should the machine shut down due to current over load, wait just a moment then press the reset button located on the housing. Resume operations.



Figure 9

1. Switch Bar

OPERATING TIPS

1. Start the Power Shovel and tilt forward until the scraper blade contacts the ground. Push the Power Shovel forward at a rate of speed comfortable for the operator yet slow enough to clear path completely. The width and depth of the snow may govern the speed of travel.

2. Direct the snow to the right or left by holding the Power Shovel at a slight angle (Fig. 10).

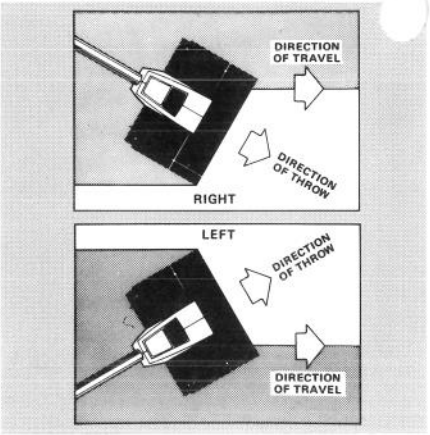

Figure 10

3. For the most efficient snow removal, throw the snow down wind, slightly overlapping each path.

4. Keep the area to be cleaned clear of foreign objects. Always be sure to keep children and pets away from the area of operation.

5. Should you find it necessary to clear snow from over crushed rock or gravel, lower the handle grip raising the edge of the scraper clear of loose material could be thrown.

6. The Power Shovel is designed to remove snow up to 4" deep in one pass. When clearing deeper drifts, hold the unit by the upper handle and center handle grip and use a swinging or sweeping motion. Remove a maximum of 4" with each pass and repeat as many times as required.

7. Keep the cord clear of obstructions, sharp objects and rotor. Do not pull sharply on the cord or abuse it in any manner. Frequently inspect the cord; if damaged, replace.

Maintenance

CAUTION

To prevent accidental starting of the Power Shovel while performing maintenance, disconnect the cord.

REPLACING ROTOR

A Worn rotor can be replaced.

1. Remove the rotor pin, locknut and washer using a 9/16" open end wrench and a 9/16" socket (Fig. 11).

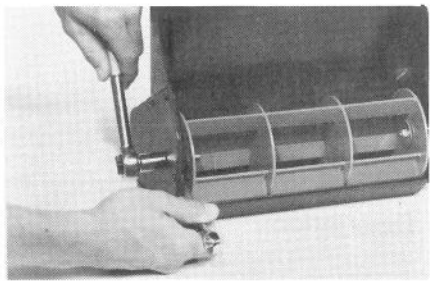

Figure 11

2. Remove the locknut and washer from the opposite end (Fig. 12).

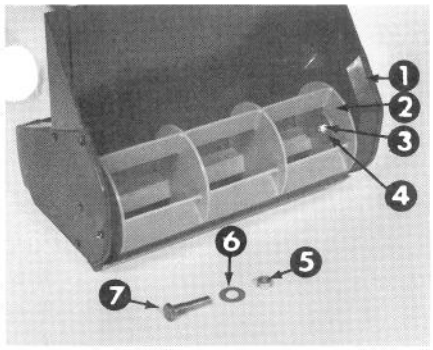

Figure 12

1. Power Shovel Housing
2. Rotor
3. Locknut
4. Washer
5. Locknut
6. Washer
7. Rotor Pin

3. Remove the rotor and felt washer (Fig. 13).

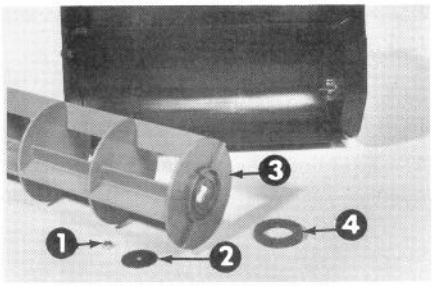

Figure 13

1. Locknut
2. Washer
3. Rotor
4. Felt Washer

4. Install new felt washer and rotor. Secure in place with the rotor pin, washer and locknuts. Tighten locknuts.

REPLACING SCRAPER

1. Remove the rotor; refer to Replacing Rotor, page 7.

2. Remove the three screws and locknuts used to hold the scraper blade in place. Remove scraper blade (Fig. 14).

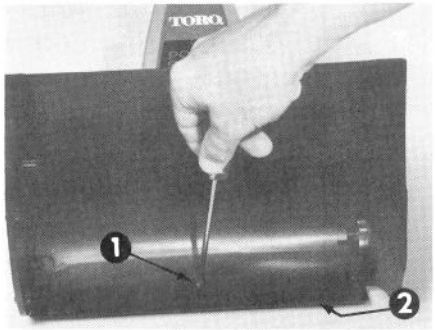

Figure 14

1. Screw
2. Scraper Blade

Maintenance

3. Attach new scraper blade taking care to hook scraper over front edge of housing. Secure with existing screws and locknuts, and tighten.

PREPARE POWER SHOVEL FOR STORAGE

1. Examine the Power Shovel thoroughly for worn, loose or damaged parts. If necessary have parts repaired or replaced.

2. Examine extension cord thoroughly for signs of excess wear or damage, replace.

3. Store the Power Shovel in a clean, dry place and cover to provide protection.

Parts Catalog

Ref. No.	Part No.	Description	No. Used
1	39-3710	Nut, Plastic Handle	2
2	39-3720	Screw, Handle	2
3	3250-20	Screw	2
4	41-9830	Scraper	1
5	38-8580	Washer - Felt	1
6	42-0070	Washer	1
7	3296-13	Locknut	1
8	3296-54	Locknut	3
9	3250-19	Screw	3
10	38-8170	Rotor	1
11	32146-21	Locknut	1
12	3256-24	Washer	1
13	38-8210	Pin, Rotor	1
14	42-3620	Decal, Housing	1
15	41-9840	Decal, Handle Support	1

Parts Catalog

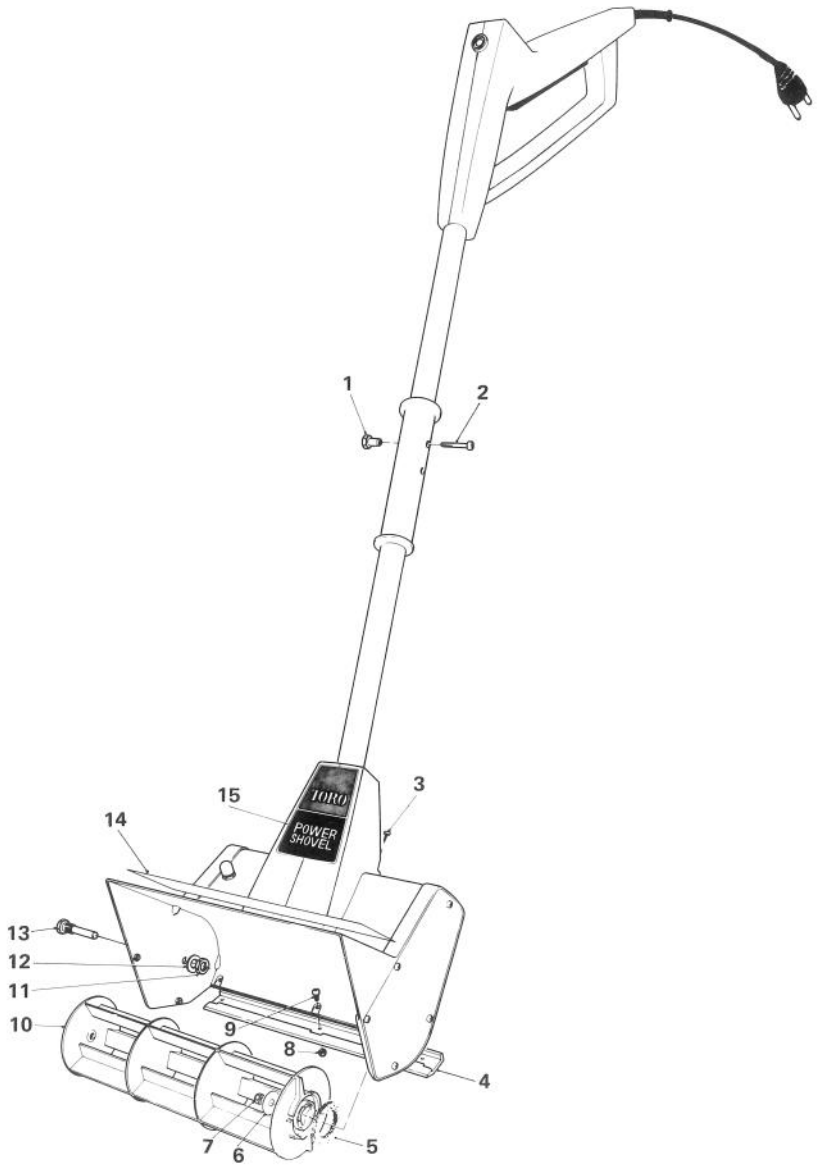


TORO®