Form No. 3371-680 Rev A

22in Recycler® Lawn Mower

Model No. 20332C—Serial No. 312000001 and Up
Model No. 20334C—Serial No. 312000001 and Up

Operator's Manual

Replacement parts are available from an Authorized Service Dealer or at www.shoptoro.com.

Introduction

This rotary-blade, walk-behind lawn mower is intended to be used by residential homeowners. It is designed primarily for cutting grass on well-maintained lawns on residential properties. It is not designed for cutting brush or for agricultural uses.

Read this information carefully to learn how to operate and maintain your product properly and to avoid injury and product damage. You are responsible for operating the product properly and safely.

You may contact Toro directly at www.Toro.com for product and accessory information, help finding a dealer, or to register your product.

Whenever you need service, genuine Toro parts, or additional information, contact an Authorized Service Dealer or Toro Customer Service and have the model and serial numbers of your product ready. Figure 1 identifies the location of the model and serial numbers on the product.

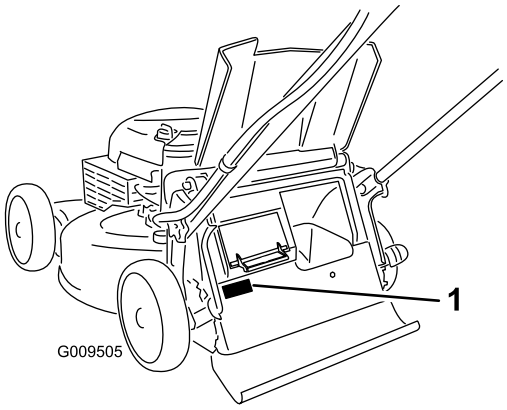

Figure 1

1. Model and serial number plate

Write the product model and serial numbers in the space below:

Model No. _____

Serial No. _____

This manual identifies potential hazards and has safety messages identified by the safety alert symbol (Figure 2), which signals a hazard that may cause serious injury or death if you do not follow the recommended precautions.



Figure 2

1. Safety alert symbol

This manual uses 2 words to highlight information. **Important** calls attention to special mechanical information and **Note** emphasizes general information worthy of special attention.

WARNING

CALIFORNIA
Proposition 65 Warning

The engine exhaust from this product contains chemicals known to the State of California to cause cancer, birth defects, or other reproductive harm.

Important: This engine is not equipped with a spark arrester muffler. It is a violation of California Public Resource Code Section 4442 to use or operate the engine on any forest-covered, brush-covered, or grass-covered land. Other states or federal areas may have similar laws.

This spark ignition system complies with Canadian ICES-002.

The enclosed *Engine Owner's Manual* is supplied for information regarding the US Environmental

© 2011—The Toro® Company
8111 Lyndale Avenue South
Bloomington, MN 55420

Register at www.Toro.com.

Original Instructions (EN)
Printed in the USA
All Rights Reserved

Protection Agency (EPA) and the California Emission Control Regulation of emission systems, maintenance, and warranty. Replacements may be ordered through the engine manufacturer.

For models with stated engine horsepower, the gross horsepower of the engine was laboratory rated by the engine manufacturer in accordance with SAE J1940. As configured to meet safety, emission, and operating requirements, the actual engine horsepower on this class of lawn mower will be significantly lower.

Safety

This lawn mower meets or exceeds the CPSC blade safety requirements for walk-behind rotary lawn mowers and the B71.1 specifications of the American National Standards Institute in effect at the time of production.

Read and understand the contents of this manual before you start the engine.

The safety alert symbol (Figure 2) is used to alert you to potential personal injury hazards. Obey all safety messages that follow this symbol to avoid possible injury or death. Improperly using or maintaining this mower could result in injury or death. To reduce this potential, comply with the following safety instructions.

The following instructions have been adapted from the ANSI/OPEI standard B71.1-2003.

This cutting machine can amputate hands and feet and throw objects. Failure to observe the following safety instructions could result in serious injury or death.

General Operation

- Read, understand, and follow all instructions on the machine and in the manual(s) before starting.
- Do not put hands or feet near or under the machine. Keep clear of the discharge opening at all times.
- Only allow responsible adults, who are familiar with the instructions, to operate this machine.
- Clear the area of objects such as rocks, wire, toys, etc., which could be thrown by the blade. Stay behind the handle when the engine is running.
- Be sure the area is clear of bystanders before operating. Stop machine if anyone enters the area.
- Do not operate machine barefooted or while wearing sandals. Always wear substantial footwear.
- Do not pull machine backward unless absolutely necessary. Always look down and behind before and while moving backward.
- Never direct discharged material toward anyone. Avoid discharging material against a wall or obstruction. Material may ricochet back toward the operator. Stop the blade when crossing gravel surfaces.
- Do not operate machine without the entire grass catcher, discharge guard, rear guard, or other safety protective devices in place and working.
- Never leave a running machine unattended.
- Stop the engine and wait until the blade comes to a complete stop before cleaning the machine, removing grass catcher, or unclogging the discharge guard.
- Operate machine only in daylight or good artificial light.
- Do not operate machine while under the influence of alcohol or drugs.
- Never operate mower in wet grass. Always be sure of your footing; walk; never run.
- Disengage the drive system, if so equipped, before starting the engine.
- If the machine should start to vibrate abnormally, stop the engine and check for the cause immediately. Vibration is generally a warning of trouble.
- Always wear eye protection when operating machine.
- See manufacturer's instructions for proper operation and installation of accessories. Only use accessories approved by the manufacturer.

Slope Operation

Slopes are a major factor related to slip and fall accidents, which can result in severe injury. Operation on all slopes require extra caution. If you feel uneasy on a slope, do not mow it.

- Mow across the face of slopes; never up and down. Exercise extreme caution when changing direction on slopes.
- Watch for holes, ruts, bumps, rocks, or other hidden objects. Uneven terrain could cause a slip and fall accident. Tall grass can hide obstacles.
- Do not mow on wet grass or excessively steep slopes. Poor footing could cause a slip and fall accident.
- Do not mow near drop-offs, ditches, or embankments. You could lose your footing or balance.

Children

Tragic accidents can occur if the operator is not alert to the presence of children. Children are often attracted to

the machine and the mowing activity. **Never** assume that children will remain where you last saw them.

- Keep children out of the mowing area and under the watchful care of a responsible adult other than the operator.
- Be alert and turn mower off if a child enters the area.
- Never allow children to operate the machine.
- Use extra care when approaching blind corners, shrubs, trees, or other objects that may block your view of a child.

Service

Safe Handling of Gasoline

To avoid personal injury or property damage, use extreme care in handling gasoline. Gasoline is extremely flammable and the vapors are explosive.

- Extinguish all cigarettes, cigars, pipes, and other sources of ignition.
- Use only an approved gasoline container.
- Never remove gas cap or add fuel with the engine running. Allow engine to cool before refueling.
- Never refuel the machine indoors.
- Never store the machine or fuel container where there is an open flame, spark, or pilot light such as on a water heater or on other appliances.
- Never fill containers inside a vehicle or on a truck or trailer bed with a plastic liner. Always place containers on the ground away from your vehicle before filling.
- Remove gas-powered equipment from the truck or trailer and refuel it on the ground. If this is not possible, then refuel such equipment with a portable container, rather than from a gasoline dispenser nozzle.
- Keep the nozzle in contact with the rim of the fuel tank or container opening at all times until fueling is complete. Do not use a nozzle lock-open device.
- If fuel is spilled on clothing, change clothing immediately.
- Never overfill fuel tank. Replace gas cap and tighten securely.

⚠ WARNING

Exhaust contains carbon monoxide, an odorless, deadly poison that can kill you.

Do not run the engine indoors or in an enclosed area.

General Service

- Never operate machine in a closed area.
- Keep all nuts and bolts tight to be sure the equipment is in safe working condition.
- Never tamper with safety devices. Check their proper operation regularly.
- Keep machine free of grass, leaves, or other debris build-up. Clean up oil or fuel spillage and remove any fuel-soaked debris. Allow machine to cool before storing.
- If you strike a foreign object, stop and inspect the machine. Repair, if necessary, before starting.
- Never make any adjustments or repairs with the engine running. Disconnect the spark plug wire and ground against engine to prevent unintended starting.
- Check grass catcher components and the discharge guard frequently and replace with manufacturer's recommended parts, when necessary.
- Mower blades are sharp. Wrap the blade or wear gloves, and use extra caution when servicing them.
- Do not change the engine governor setting or overspeed the engine.
- Maintain or replace safety and instruction labels, as necessary.

Safety and Instructional Decals

Important: **Safety and instruction decals are located near areas of potential danger. Replace damaged decals.**

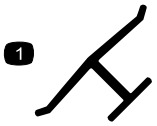

Manufacturer's Mark

1. Indicates the blade is identified as a part from the original machine manufacturer.



94-8072

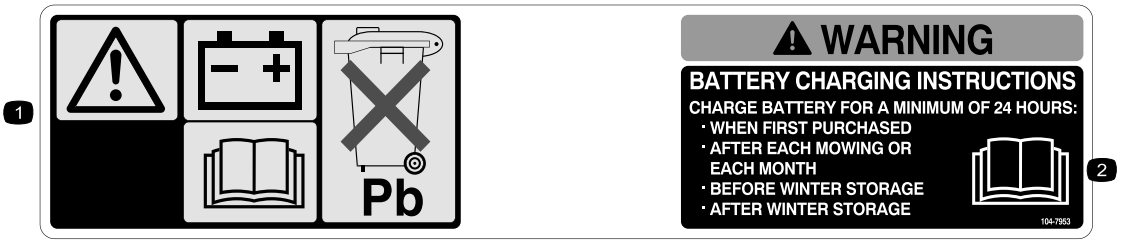

104-7953

1. Warning—read the *Operator's Manual* for information on charging the battery; contains lead; do not discard.
2. Read the *Operator's Manual*.



112-8867

1. Lock
2. Unlock



114-7982

1. Warning—read the *Operator's Manual*.
2. Thrown object hazard—keep bystanders a safe distance from the machine.
3. Cutting/dismemberment hazard of hand or foot, mower blade—remove the ignition key and read the instructions before servicing or performing maintenance.
4. Cutting/dismemberment hazard of hand or foot, mower blade—stay away from moving parts.
5. Cutting/dismemberment hazard of hand or foot, mower blade—do not operate up and down slopes; operate side to side on slopes; stop the engine before leaving the operating position; and look behind you when backing up.

Setup

Important: Remove and discard the protective plastic sheet that covers the engine.

1

Installing the Handle

No Parts Required

Procedure

⚠ WARNING

Folding or unfolding the handle improperly can damage the cables, causing an unsafe operating condition.

- **Do not damage the cables when folding or unfolding the handle.**
- **If a cable is damaged, contact an Authorized Service Dealer.**

1. Remove the handle knobs from the mower housing (Figure 3).

   Important: Route the cables to the outside of the handle knobs as you install the handle.

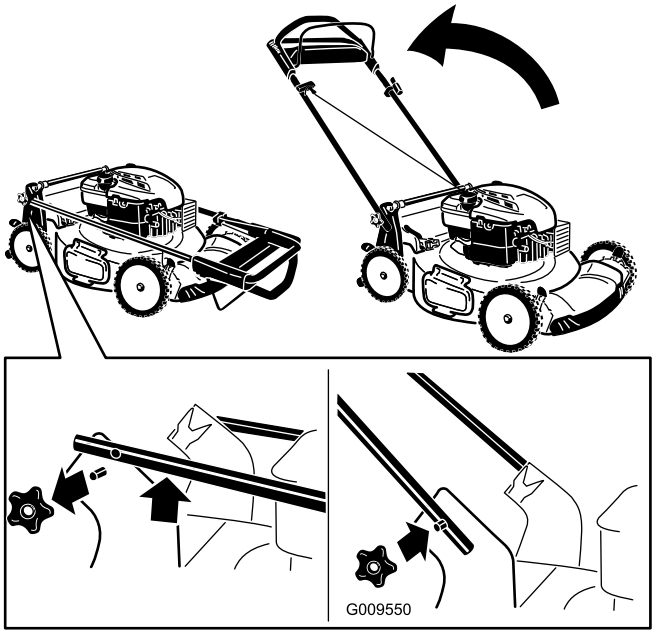

Figure 3

2. Move the handle to the operating position.
3. Install and tighten the handle knobs that you removed in step 1.

2

Filling the Engine with Oil

No Parts Required

Procedure

Important: Your mower does not come with oil in the engine, but it does come with a bottle of oil. Before starting the engine, fill the engine with oil.

Max. fill: 20 oz. (0.59 l), type: SAE 30 or SAE 30 detergent oil with an API service classification of SF, SG, SH, SJ, SL, or higher.

Note: When the crankcase is empty, pour about 3/4 of the crankcase capacity of oil in the crankcase, then do the following:

1. Move the mower to a level surface.
2. Remove the dipstick by rotating the cap counterclockwise and pulling it out (Figure 4).

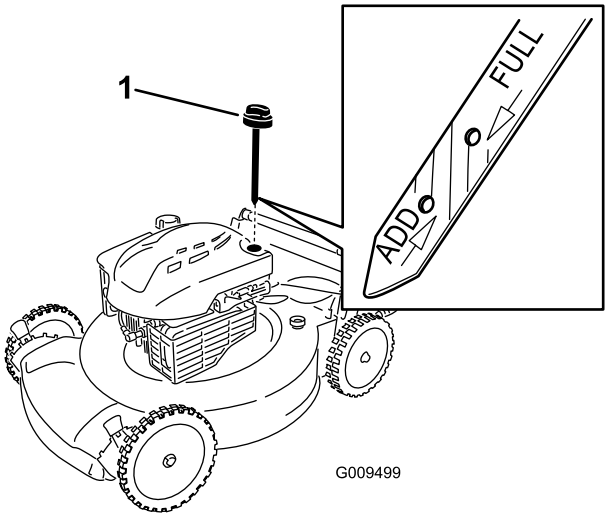

Figure 4

1. Dipstick

3. Wipe the dipstick clean with a clean cloth.
4. Insert the dipstick fully into the oil fill tube, then remove the dipstick.
5. Read the oil level on the dipstick.

   Note: If the oil level is below the **Add** mark on the dipstick, **slowly** pour a small amount of oil into the oil fill tube, wait 3 minutes, and repeat steps 3 through 5 until the oil level is at the **Full** mark on the dipstick (Figure 4).

Important: **Do not overfill the crankcase with oil and run the engine. Drain the excess oil until the oil level on the dipstick reads Full.**

6. Install the dipstick into the oil fill tube securely.

Important: ***Change the engine oil after the first 5 operating hours*; change it yearly thereafter. Refer to Changing the Engine Oil.**

3

Charging the Battery

No Parts Required

Procedure

Electric-start models only

Refer to Charging the Battery in the Maintenance section.

Product Overview

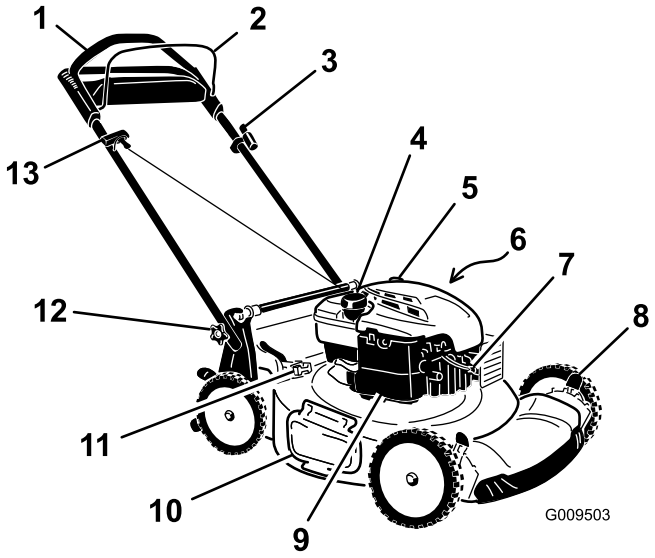

Figure 5

1. Handle
2. Blade control bar
3. Ignition key (electric-start models only)
4. Fuel tank cap
5. Oil fill/dipstick
6. Washout port (not shown)
7. Spark plug
8. Cutting height lever (4)
9. Air filter
10. Side-discharge deflector
11. Bag-on-demand lever
12. Handle knob (2)
13. Recoil start handle

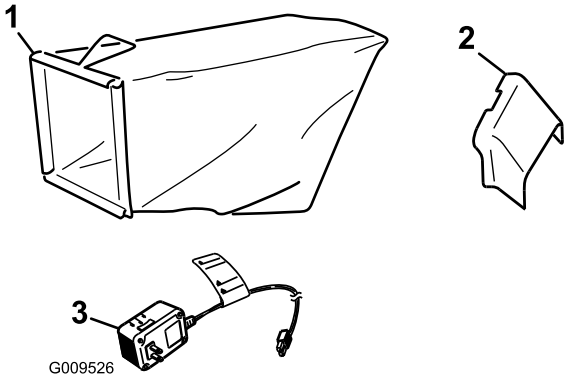

Figure 6

1. Grass bag
2. Side discharge chute
3. Battery charger (electric-start models only)

Operation

Filling the Fuel Tank

⚠ DANGER

Gasoline is extremely flammable and explosive. A fire or explosion from gasoline can burn you and others.

- **To prevent a static charge from igniting the gasoline, place the container and/or mower directly on the ground before filling, not in a vehicle or on an object.**
- **Fill the tank outdoors when the engine is cold. Wipe up spills.**
- **Do not handle gasoline when smoking or around an open flame or sparks.**
- **Store gasoline in an approved fuel container, out of the reach of children.**

Fill the fuel tank with fresh unleaded regular gasoline (having an octane rating of 87 or higher) from a major name-brand service station (Figure 7).

Note: Never use methanol, gasoline containing methanol, or gasoline containing more than 10% ethanol because the fuel system could be damaged. Do not mix oil with gasoline.

Important: To reduce starting problems, add fuel stabilizer to the fuel all season, mixing it with gasoline less than 30 days old.

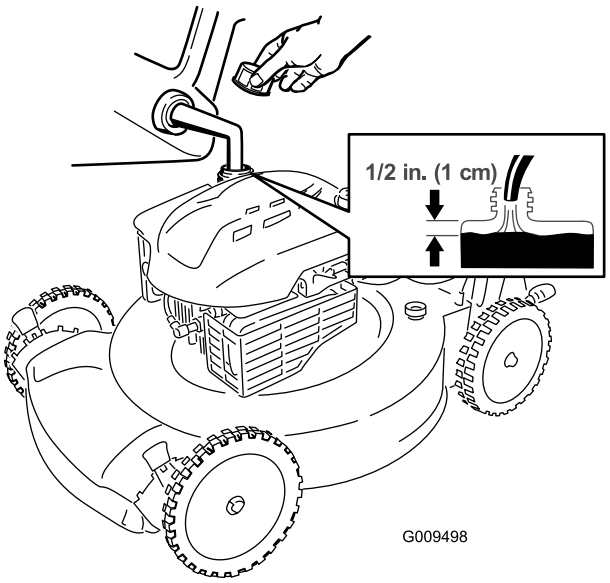

Figure 7

Checking the Engine Oil Level

Service Interval: Before each use or daily

Note: Max. fill: 20 oz. (0.59 l), type: SAE 30 detergent oil with an API service classification of SF, SG, SH, SJ, SL, or higher.

1. Move the mower to a level surface.
2. Remove the dipstick (Figure 8).

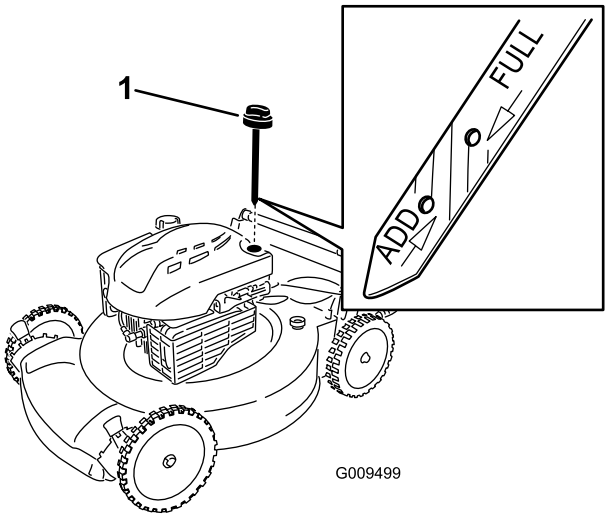

Figure 8

1. Dipstick

3. Wipe the dipstick clean with a clean cloth.
4. Insert the dipstick fully into the oil fill tube, then remove the dipstick.
5. Read the oil level on the dipstick.

   Note: If the oil level is below the **Add** mark on the dipstick, **slowly** pour a small amount of oil into the oil fill tube, wait 3 minutes, and repeat steps 3 through 5 until the oil level is at the **Full** mark on the dipstick (Figure 8).

   Important: Do not overfill the crankcase with oil and run the engine. Drain the excess oil until the oil level on the dipstick reads Full.

6. Install the dipstick into the oil fill tube securely.

Adjusting the Cutting Height

⚠ WARNING

Adjusting the cutting height may bring you into contact with the moving blade, causing serious injury.

- **Stop the engine and wait for all moving parts to stop.**
- **Do not put your fingers under the housing when adjusting the cutting height.**

⚠ CAUTION

If the engine has been running, the muffler will be hot and can severely burn you. Keep away from the hot muffler.

Adjust the cutting height as desired. Set the front wheels to the same height as the rear wheels (Figure 9).

Note: To raise the mower, move the front cutting height levers rearward and the rear cutting height levers forward. To lower the mower, move the front cutting height levers forward and the rear cutting height levers rearward.

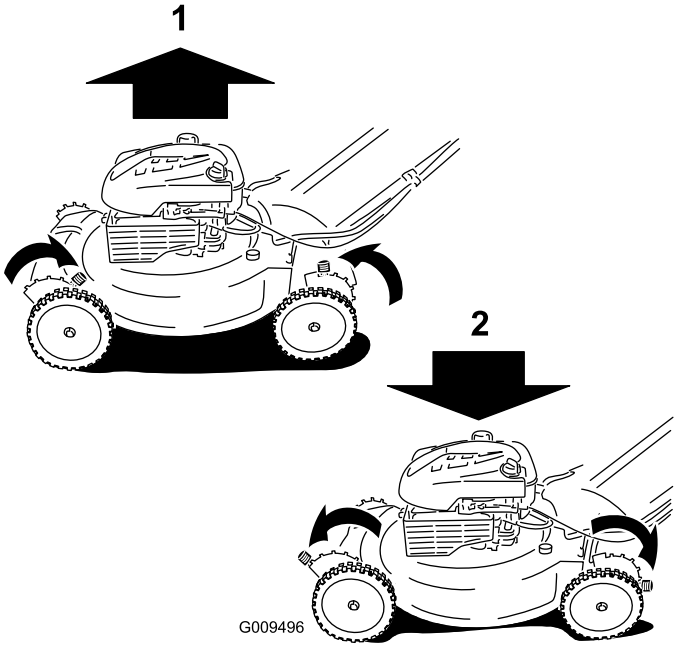

Figure 9

1. Raise the mower
2. Lower the mower

Note: The cutting height settings are 1 inch (25 mm); 1-3/8 inches (35 mm); 1-3/4 inches (44 mm); 2-1/8 inches (54 mm); 2-1/2 inches (64 mm); 2-7/8 inches (73 mm); 3-1/4 inches (83 mm); 3-5/8 inches (92 mm); and 4 inches (102 mm).

Starting the Engine

1. Hold the blade control bar against the handle (Figure 10).

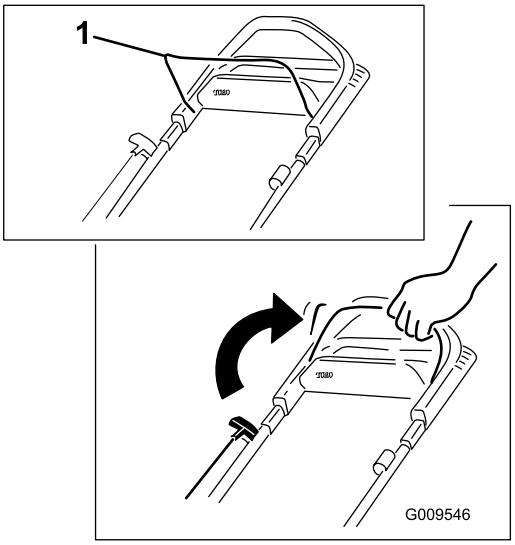

Figure 10

1. Blade control bar

2. Turn the ignition key (Figure 11) (electric-start models only) or pull the recoil start handle (Figure 12).

   Note: When you pull the recoil start handle, pull it lightly until you feel resistance, then pull it sharply (Figure 12). Allow the rope to return to the handle slowly.

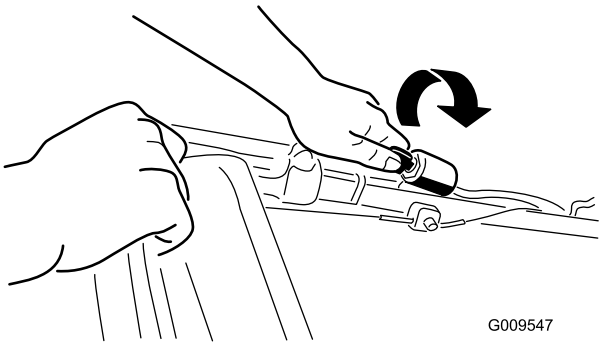

Figure 11

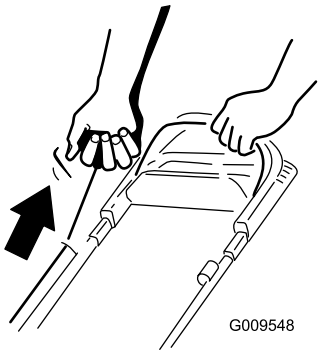

Figure 12

Note: If the mower does not start after several attempts, contact an Authorized Service Dealer.

Using the Self-propel Drive

To operate the self-propel drive, simply walk with your hands on the upper handle and your elbows at your sides, and the mower will automatically keep pace with you (Figure 13).

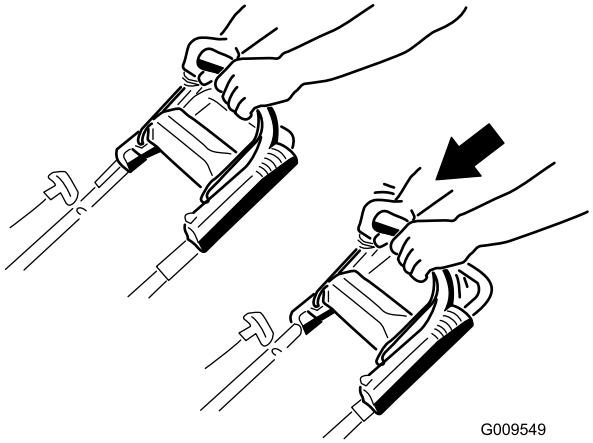

Figure 13

Note: If the mower does not freely roll backward after self-propelling, stop walking, hold your hands in place, and allow the mower to roll a couple of inches (centimeters) forward to disengage the wheel drive. You can also try reaching just under the personal pace handle to the metal handle and push the mower forward a couple of inches (centimeters). If the mower still does not roll backward easily, contact an Authorized Service Dealer.

Stopping the Engine

To stop the engine, release the blade control bar.

Note: Remove the ignition key when you leave the mower (electric-start models only).

Important: When you release the blade control bar, both the engine and blade should stop within 3 seconds. If they do not stop properly, stop using your mower immediately and contact an Authorized Service Dealer.

Recycling the Clippings

Your mower comes from the factory ready to recycle the grass and leaf clippings back into the lawn.

If the grass bag is on the mower and the bag-on-demand lever is in the bagging position, move the lever to the recycling position (refer to Operating the Bag-on-Demand Lever) before recycling the clippings. If the side-discharge chute is on the mower, remove it (refer to Removing the Side Discharge Chute) before recycling the clippings.

Bagging the Clippings

Use the grass bag when you want to collect grass and leaf clippings from the lawn.

⚠ WARNING

A worn grass bag could allow small stones and other similar debris to be thrown in the operator's or bystander's direction and result in serious personal injury or death to the operator or bystanders.

Check the grass bag frequently. If it is damaged, install a new Toro replacement bag.

If the side discharge chute is on the mower, remove it (refer to Removing the Side Discharge Chute) before bagging the clippings. If the bag-on-demand lever is in the recycling position, move it to the bagging position (refer to Operating the Bag-on-Demand Lever).

⚠ WARNING

The blade is sharp; contacting the blade can result in serious personal injury.

Stop the engine and wait for all moving parts to stop before leaving the operating position.

Installing the Grass Bag

1. Raise and hold up the rear deflector (Figure 14).

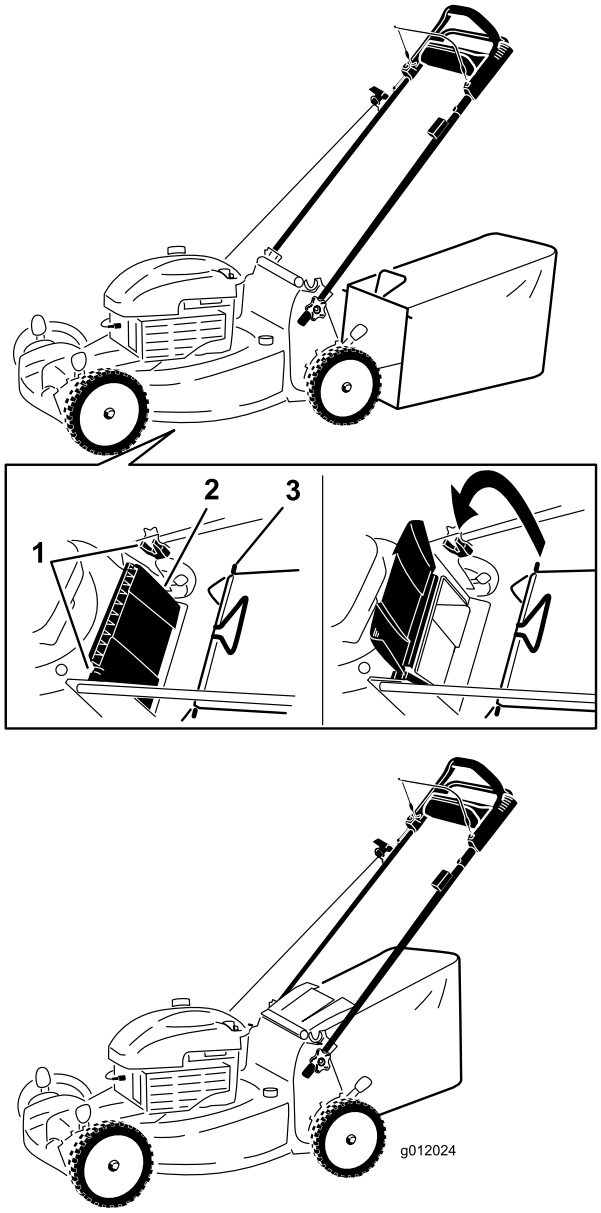

Figure 14

1. Notches
2. Rear deflector
3. Grass bag pin (2)

2. Install the grass bag, ensuring that the pins on the bag rest in the notches on the handle (Figure 14).
3. Lower the rear deflector.

Removing the Grass Bag

To remove the bag, reverse the steps above.

Operating the Bag-on-Demand Lever

The bag-on-demand feature allows you to either collect or recycle grass and leaf clippings while the grass bag is attached to the mower.

- For bagging the grass and leaf clippings, press the button on the bag-on-demand lever and move the lever forward until the button on the lever pops up (Figure 15)

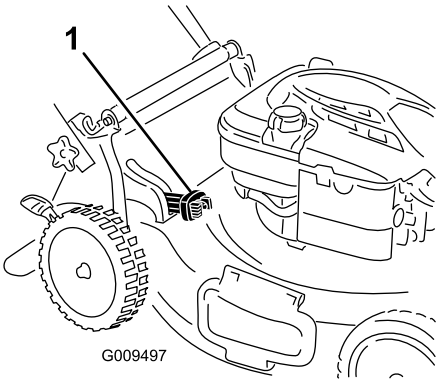

Figure 15

1. Bag-on-demand lever (in bagging position)

- For recycling the grass and leaf clippings, press the button on the lever and move the lever rearward until the button on the lever pops up.

Important: For proper operation, remove any grass clippings and debris from the bag-on-demand door and the surrounding opening (Figure 16) before you move the bag-on-demand lever from one position to another.

⚠ WARNING

The blade is sharp; contacting the blade can result in serious personal injury. Also, an open rear discharge area could allow small stones and other similar debris to be thrown in the operator's or bystander's direction and result in serious personal injury or death to the operator or bystanders.

Stop the engine and wait for all moving parts to stop before cleaning the bag-on-demand door and the surrounding opening.

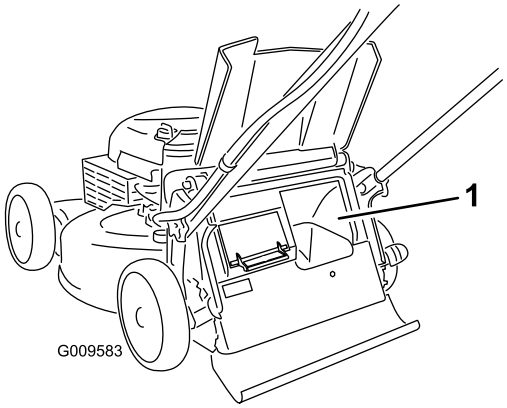

Figure 16

1. Clean here

Side-discharging the Clippings

Use the side discharge for cutting very tall grass.

If the grass bag is on the mower and the bag-on-demand lever is in the bagging position, move the lever to the recycling position (refer to Operating the Bag-on-Demand Lever).

⚠ WARNING

The blade is sharp; contacting the blade can result in serious personal injury.

Stop the engine and wait for all moving parts to stop before leaving the operating position.

Installing the Side Discharge Chute

Lift up the side deflector and install the side discharge chute (Figure 17).



Figure 17

Removing the Side Discharge Chute

To remove the side discharge chute, lift up the side deflector, remove the side discharge chute, and lower the side discharge deflector.

Operating Tips

General Mowing Tips

- Clear the area of sticks, stones, wire, branches, and other debris that the blade could hit.
- Avoid striking solid objects with the blade. Never deliberately mow over any object.
- If the mower strikes an object or starts to vibrate, immediately stop the engine, disconnect the wire from the spark plug, and examine the mower for damage.
- For best performance, install a new blade before the cutting season begins.
- Replace the blade when necessary with a Toro replacement blade.

Cutting Grass

- Cut only about a third of the grass blade at a time. Do not cut below the 2-1/8-inch (54 mm) setting unless the grass is sparse or it is late fall when grass growth begins to slow down. Refer to Adjusting the Cutting Height.
- When cutting grass over 6 inches (15 cm) tall, mow at the highest cutting height setting and walk slower; then mow again at a lower setting for the best lawn appearance. If the grass is too long, the mower may plug and cause the engine to stall.
- Mow only dry grass or leaves. Wet grass and leaves tend to clump on the yard and can cause the mower to plug or the engine to stall.

⚠ WARNING

Wet grass or leaves can cause serious injury if you slip and contact the blade. Mow only in dry conditions.

- Be aware of a potential fire hazard in very dry conditions, follow all local fire warnings, and keep the mower free of dry grass and leaf debris.
- Alternate the mowing direction. This helps disperse the clippings over the lawn for even fertilization.
- If the finished lawn appearance is unsatisfactory, try one or more of the following:
  - Replace the blade or have it sharpened.
  - Walk at a slower pace while mowing.
  - Raise the cutting height on your mower.
  - Cut the grass more frequently.
  - Overlap cutting swaths instead of cutting a full swath with each pass.
  - Set the cutting height on the front wheels one notch lower than the rear wheels. For example, set the front wheels at 2-1/8-inch (54 mm) and the rear wheels at 2-1/2 inches (64 mm).

Cutting Leaves

- After cutting the lawn, ensure that half of the lawn shows through the cut leaf cover. You may need to make more than one pass over the leaves.
- If there are more than 5 inches (13 cm) of leaves on the lawn, set the front cutting height one or two notches higher than the rear cutting height.
- Slow down your mowing speed if the mower does not cut the leaves finely enough.

Maintenance

Note: Determine the left and right sides of the machine from the normal operating position.

Recommended Maintenance Schedule(s)

Maintenance Service Interval	Maintenance Procedure
After the first 5 hours	• Change the engine oil.
Before each use or daily	• Check the engine oil level. • Ensure that the engine stops within 3 seconds after releasing the blade control bar. • Clean grass clippings and dirt from under the mower.
Every 25 hours	• Replace the air filter; replace it more frequently in dusty operating conditions. • Charge the battery for 24 hours (electric-start models only).
Before storage	• Empty the fuel tank before repairs as directed and before annual storage.
Yearly	• Change the engine oil. • Replace the blade or have it sharpened (more frequently if the edge dulls quickly). • Clean the air cooling system; clean it more frequently in dusty operating conditions. Refer to your engine operator's manual. • Refer to your engine operator's manual for any additional yearly maintenance procedures.

Important: **Refer to your engine operator's manual for additional maintenance procedures.**

Note: Replacement parts are available from an Authorized Service Dealer (go to www.toro.com to find the nearest dealer) or at www.shoptoro.com.

Preparing for Maintenance

1. Stop the engine and wait for all moving parts to stop.
2. Disconnect the spark plug wire from the spark plug (Figure 18) before performing any maintenance procedure.

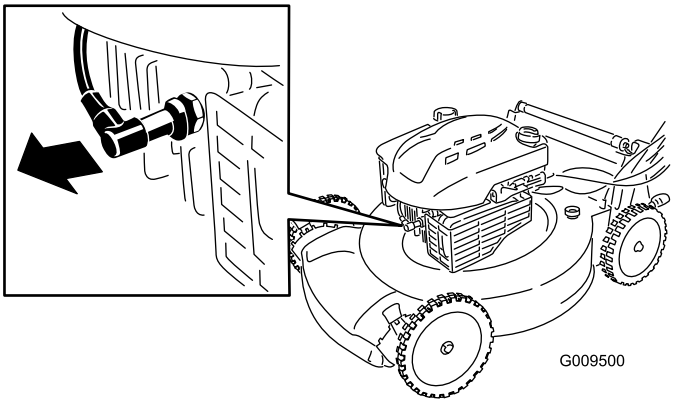

Figure 18

1. Spark plug wire

3. After performing the maintenance procedure(s), connect the spark plug wire to the spark plug.

⚠ WARNING

Tipping the mower may cause the fuel to leak. Gasoline is flammable, explosive and can cause personal injury.

Run the engine dry or remove the gasoline with a hand pump; never siphon.

Important: **Always tip the mower onto its side with the dipstick down.**

Replacing the Air Cleaner

Service Interval: Every 25 hours

1. Use a screw driver to open the air filter cover (Figure 19).
2. Replace the air filter (Figure 19).
3. Install the cover.

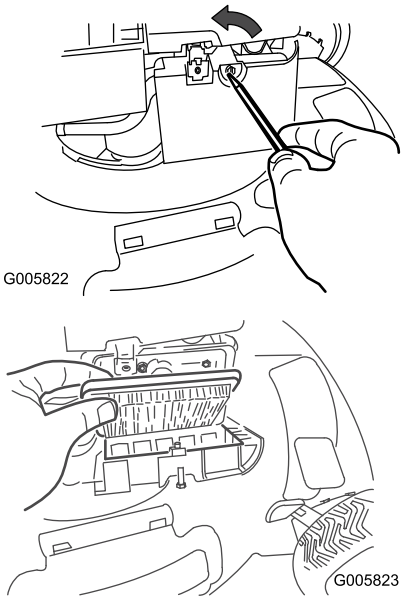

Figure 19

Changing the Engine Oil

Service Interval: After the first 5 hours

Yearly

Run the engine a few minutes before changing the oil to warm it. Warm oil flows better and carries more contaminants.

1. Move the mower to a level surface.
2. Refer to Preparing for Maintenance.
3. Remove the dipstick (Figure 20).

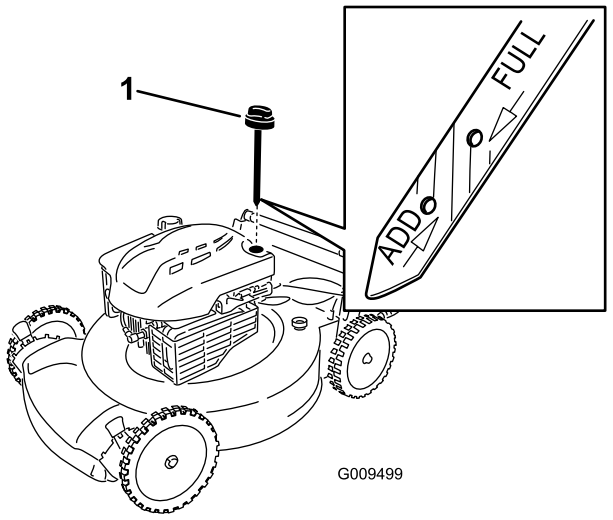

Figure 20

1. Dipstick

4. Tip the mower onto its side with the air filter up to drain the used oil out through the oil fill tube (Figure 21).

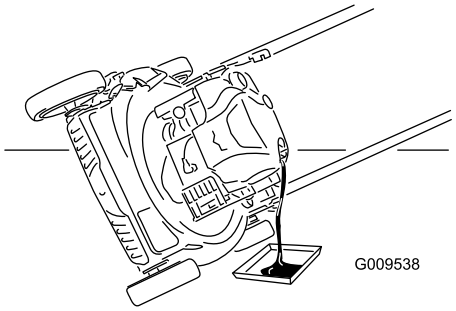

Figure 21

5. Return the mower to the operating position.
6. Pour about 3/4 of the crankcase capacity of oil in the crankcase.
7. Wait 3 minutes for the oil to settle.
8. Wipe the dipstick clean with a clean cloth.
9. Insert the dipstick fully into the oil fill tube, then remove the dipstick.
10. Read the oil level on the dipstick.

    Note: If the oil level is below the **Add** mark on the dipstick, **slowly** pour a small amount of oil into the oil fill tube and repeat steps 8 through 10 until the oil level is at the **Full** mark on the dipstick (Figure 20).

    Important: Do not overfill the crankcase with oil and run the engine. Drain the excess oil until the oil level on the dipstick reads Full.
11. Install the dipstick into the oil fill tube securely.
12. Dispose of the used oil properly at a local recycling center.

Charging the Battery

Service Interval: Every 25 hours

Electric-start models only

WARNING

CALIFORNIA
Proposition 65 Warning

Battery posts, terminals, and related accessories contain lead and lead compounds, chemicals known to the State of California to cause cancer and reproductive harm. Wash hands after handling.

Charge the battery for 24 hours initially, then monthly (every 25 starts) or as needed. Always use the charger in a sheltered area and charge the battery at room temperature (70° or 22° C) whenever possible.

1. Connect the charger to the mower wire harness located below the ignition key (Figure 22).

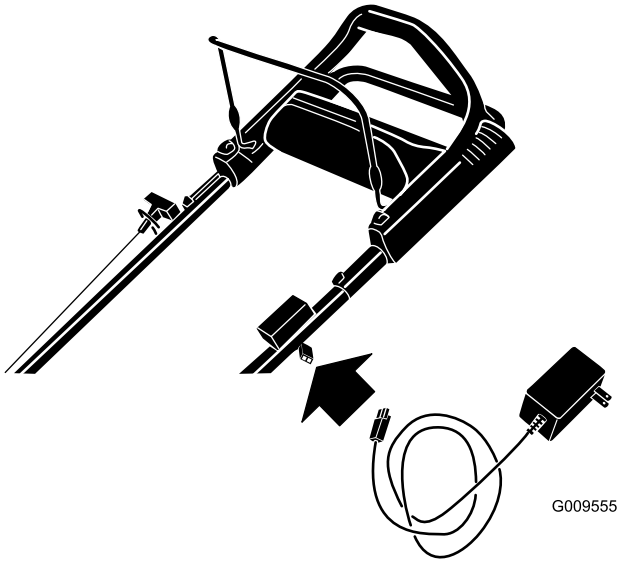

Figure 22

2. Plug the charger into a wall outlet.

   Note: When the battery no longer holds a charge, recycle or dispose of the lead-acid battery according to local codes.

Note: Your battery charger may have a two-color LED display that indicates the following states of charging:

- A red light indicates that the charger is charging the battery.
- A green light indicates that the charger is fully charged or the charger is disconnected from the battery.
- A flashing light that alternates between red and green indicates that the battery is nearly fully charged. This state lasts only a few minutes until the battery is fully charged.

Replacing the Fuse

Electric-start models only

If the battery does not charge or the engine does not run with the electric starter, the fuse may be blown. Replace it with a 40-amp plug-in type fuse.

1. Raise the rear deflector and locate the battery compartment (Figure 23).

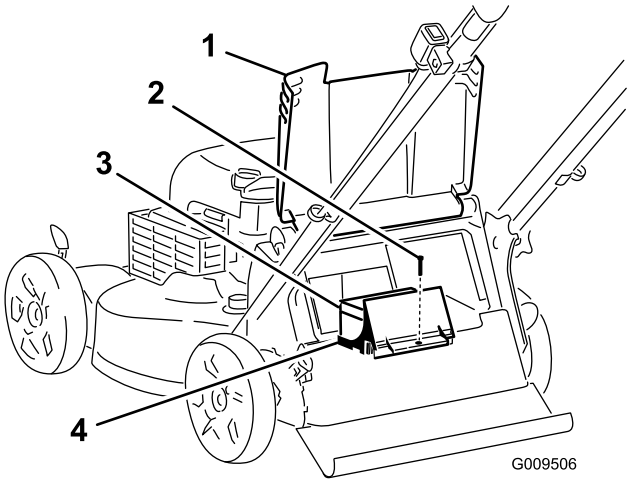

Figure 23

1. Rear deflector
2. Screw
3. Battery
4. Battery compartment

2. Wipe away any debris in the battery compartment area.
3. Remove the screw that secures the battery compartment, pull out the battery, and locate the fuse (Figure 24.

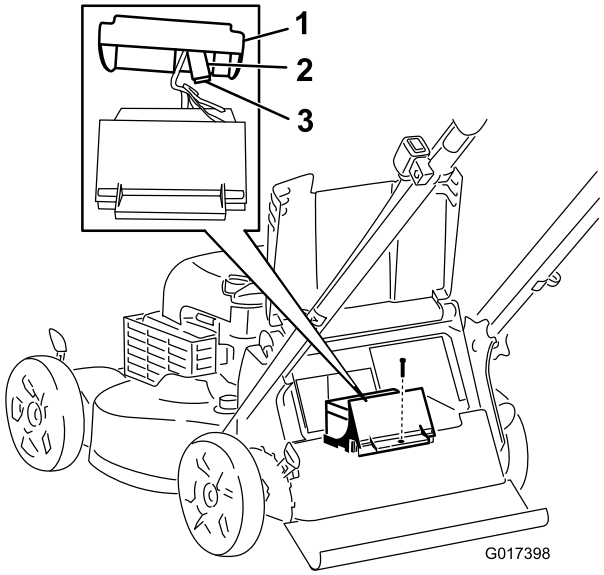

Figure 24

1. Battery cover
2. Fuse holder
3. Fuse

4. Replace the fuse in the fuse holder (Figure 24).

   Note: Your mower comes with a spare fuse in the battery compartment.
5. Install the battery compartment with the screw that you removed in step 3.
6. Install the covering over the battery compartment.
7. Lower the rear deflector.

Replacing the Blade

Service Interval: Yearly

Important: ***You will need a torque wrench to install the blade properly*. If you do not have a torque wrench or are uncomfortable performing this procedure, contact an Authorized Service Dealer.**

Examine the blade whenever you run out of gasoline. If the blade is damaged or cracked, replace it immediately. If the blade edge is dull or nicked, have it sharpened and balanced, or replace it.

⚠ WARNING

The blade is sharp; contacting the blade can result in serious personal injury.

Wear gloves when servicing the blade.

1. Refer to Preparing for Maintenance.
2. Tip the mower onto its side with the air filter up.
3. Use a block of wood to hold the blade steady (Figure 25).

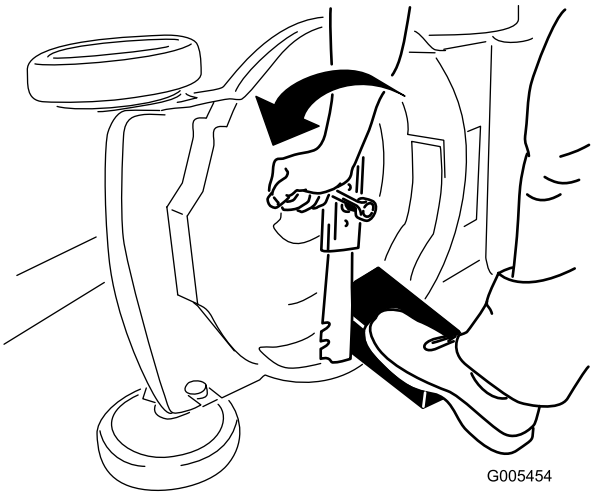

Figure 25

4. Remove the blade, saving all mounting hardware (Figure 25).
5. Install the new blade and all mounting hardware (Figure 26).

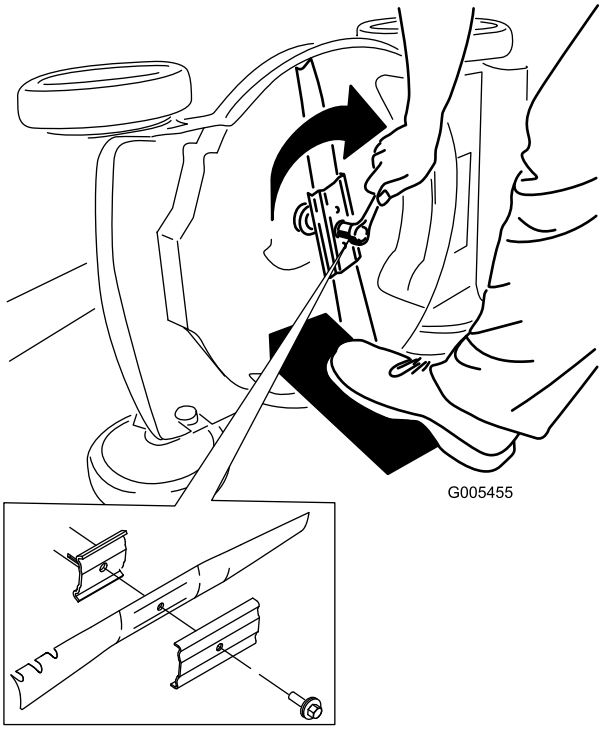

Figure 26

Important: Position the curved ends of the blade to point toward the mower housing.

6. **Use a torque wrench to tighten the blade bolt to 60 ft-lb (82 N-m).**

   Important: A bolt torqued to 60 ft-lb (82 N-m) is very tight. While holding the blade with a block of wood, put your weight behind the

ratchet or wrench and tighten the bolt securely. This bolt is very difficult to overtighten.

Adjusting the Self-propel Drive Cable

Whenever you install a new self-propel cable or if the self-propel drive is out of adjustment, adjust the self-propel drive cable.

1. Loosen the cable support nut (Figure 27).
2. Pull down the cable jacket (toward the mower) until there is no slack in the cable (Figure 27).
3. Tighten the nut on the cable support.

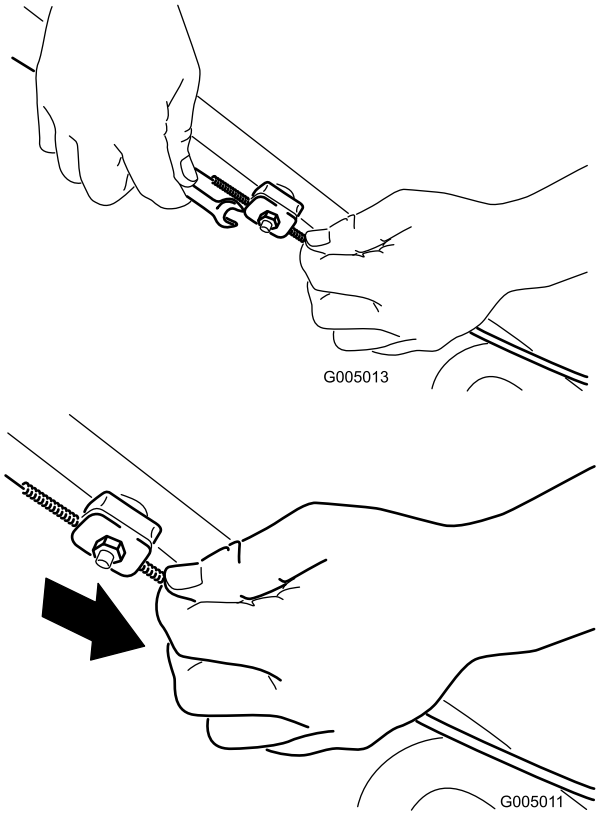

Figure 27

This figure is simplified for the purpose of clarity.

Cleaning the Mower

Service Interval: Before each use or daily

⚠ WARNING

The mower may dislodge material from under the mower housing.

- **Wear eye protection.**
- **Stay in the operating position (behind the handle) when the engine is running.**
- **Do not allow bystanders in the area.**

For best results, clean the mower soon after you have completed mowing.

1. Lower the mower to its lowest cutting height setting. Refer to Adjusting the Cutting Height.
2. Move the mower onto a flat paved surface.
3. Wash out the area under the rear deflector where the clippings go from the housing to the grass bag.

   Note: Wash out the area with the bag-on-demand in both the fully forward and fully rearward positions.
4. Attach a garden hose that is connected to a water supply to the washout port on the mower housing (Figure 28).

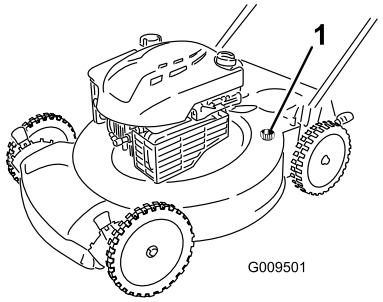

Figure 28

1. Washout port

5. Turn the water on.
6. Start the engine and run it until there are no more clippings that come out from under the mower housing.
7. Stop the engine.
8. Shut off the water and disconnect the garden hose from the mower.
9. Start the engine and run it for a few minutes to dry the housing to prevent it from rusting.
10. Allow the engine to cool before storing the mower in an enclosed area.

Storage

Store the mower in a cool, clean, dry place.

Preparing the Mower for Storage

⚠ WARNING

Gasoline vapors can explode.

- **Do not store gasoline more than 30 days.**
- **Do not store the mower in an enclosure near an open flame.**
- **Allow the engine to cool before storing it.**

1. On the last refueling of the year, add fuel stabilizer to the fuel as directed by the engine manufacturer.
2. Dispose of any unused fuel properly. Recycle it according to local codes, or use it in your automobile.

   Note: Old fuel in the fuel tank is the leading cause of hard starting. Do not store fuel without stabilizer more than 30 days, and do not store stabilized fuel more than 90 days.
3. Run the mower until the engine stops from running out of fuel.
4. Start the engine again.
5. Allow the engine to run until it stops. When you can no longer start the engine, it is sufficiently dry.
6. Disconnect the wire from the spark plug.
7. Remove the spark plug, add 1 oz. (30 ml) of oil through the spark plug hole, and pull the starter rope slowly several times to distribute oil throughout the cylinder to prevent cylinder corrosion during the off-season.
8. Loosely install the spark plug.
9. Tighten all nuts, bolts, and screws.
10. Charge the battery for 24 hours, then unplug the battery charger an store the mower in an unheated area. If you must store the mower in a heated area, you must charge the battery every 90 days (electric-start models only).

Folding the Handle

⚠ WARNING

Folding or unfolding the handle improperly can damage the cables, causing an unsafe operating condition.

- **Do not damage the cables when folding or unfolding the handle.**
- **If a cable is damaged, contact an Authorized Service Dealer.**

1. Remove the ignition key (electric-start model only).
2. Loosen the handle knobs until you can move the upper handle freely.
3. Fold the upper handle forward as shown in Figure 29.

   Important: Route the cables to the outside of the handle knobs as you fold the handle.

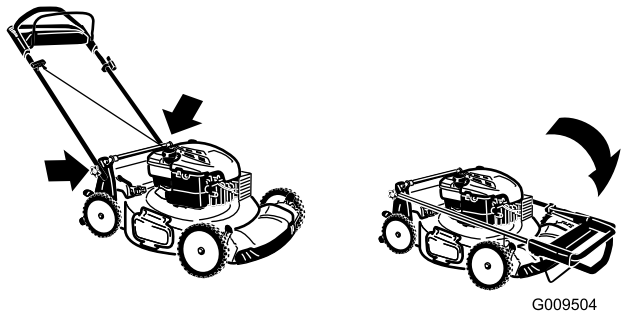

Figure 29

4. To unfold the handle, reverse the steps above.

Removing the Mower from Storage

1. Charge the battery for 24 hours (electric-start models only).
2. Connect the wire to the spark plug.

Notes:

The Toro Total Coverage Guarantee

A 2-Year Full Warranty (45 Day Limited Warranty for Commercial Use)

The Toro GTS Starting Guarantee

A 3-Year Full Warranty (Not Applicable for Commercial Use)

22 in Recycler®
20 in Mulcher/Bagger
Walk Power Mowers

Conditions and Products Covered

The Toro Company and its affiliate, Toro Warranty Company, pursuant to an agreement between them, jointly promise to repair the Toro Product listed below if used for residential purposes*; if it is defective in materials or workmanship or if it stops functioning due to the failure of a component; or if the Toro GTS (Guaranteed to Start) engine will not start on the first or second pull, provided the routine maintenance required in the *Operator's Manual* have been performed.

This warranty covers the cost of parts and labor, but you must pay transportation costs.

The following time periods apply from the date of purchase:

Products	Warranty Period
22 in Recycler and 20 in Mulcher/Bagger and Attachments	2 - year full warranty
GTS (Guaranteed to Start)	3 - year full warranty
Engine	3 - year full warranty
Battery	1 - year full warranty

Limited Warranty for Commercial Use*

Gas-powered Toro Products used for commercial, institutional, or rental use, are warranted for 45 days against defects in materials or workmanship. Components failing due to normal wear are not covered by this warranty.

The Toro GTS (Guaranteed to Start) Starting Guarantee does not apply when the product is used commercially*.

Instructions for Obtaining Warranty Service

If you think that your Toro Product contains a defect in materials or workmanship, or if a normal, able-bodied adult can no longer start your product's engine in one or two pulls, follow this procedure:

1. Contact any Authorized Toro Service Dealer to arrange service at their dealership. To locate a dealer convenient to you, refer to the *Yellow Pages* of your telephone directory (look under “Lawn Mowers”) or access our web site at www.Toro.com. You may also call the numbers listed in item #3 to use the 24-hour Toro Dealer locator system.
2. Bring the product and your proof of purchase (sales receipt) to the Service Dealer. The dealer will diagnose the problem and determine if it is covered under warranty.
3. If for any reason you are dissatisfied with the Service Dealer’s analysis or with the assistance provided, contact us at:

   Customer Care Department, RLC Division
   The Toro Company
   8111 Lyndale Avenue South
   Bloomington, MN 55420-1196
   Toll free at 866-214-9807 (U.S. customers)
   Toll free at 866-214-9808 (Canadian customers)

Owner Responsibilities

You must maintain your Toro Product by following the maintenance procedures described in the *Operator's Manual*. Such routine maintenance, whether performed by a dealer or by you, is at your expense.

Items and Conditions Not Covered

There is no other express warranty except for special emission system coverage and engine warranty coverage on some products. This express warranty does not cover the following:

- Cost of regular maintenance service or parts, such as filters, fuel, lubricants, oil changes, spark plugs, air filters blade sharpening or worn blades, cable/linkage adjustments, or brake and clutch adjustments
- Any product or part which has been altered or misused and requires replacement or repair due to accidents or lack of proper maintenance
- Repairs necessary due to failure to use fresh fuel (less than one month old), or failure to properly prepare the unit prior to any period of non-use over one month
- Pickup and delivery charges
- Operational misuse, neglect, or accidents
- Repairs or attempted repairs by anyone other than an Authorized Toro Service Dealer
- Repairs or adjustments to correct starting difficulties due to the following:
  - failure to follow proper maintenance procedures
  - rotary mower blade striking an object
  - contaminants in the fuel system
  - improper fuel (consult your *Operator's Manual* if in doubt)
  - failure to drain the fuel system prior to any period of non-use over one month
- Special operational conditions where starting may require more than two pulls:
  - first time starts after extended period of non-use over three months or seasonal storage
  - cool temperature starts such as those found in early spring and late autumn
  - improper starting procedures - if you are having difficulty starting your unit, please check the *Operator's Manual* to ensure that you are using the correct starting procedures. This can save an unnecessary visit to an Authorized Toro Service Dealer.

General Conditions

All repairs covered by these warranties must be performed by an Authorized Toro Service Dealer using Toro-approved replacement parts. Repair by an Authorized Toro Service Dealer is your sole remedy under this warranty.

Neither The Toro Company nor Toro Warranty Company is liable for indirect, incidental, or consequential damages in connection with the use of the Toro Products covered by these warranties, including any cost or expense of providing substitute equipment or service during reasonable periods of malfunction or non-use pending completion of repairs under these warranties.

Some states do not allow exclusions of incidental or consequential damages, so the above exclusions may not apply to you.

This warranty gives you specific legal rights, and you may also have other rights which vary from state to state.

Countries Other than the United States or Canada

Customers who have purchased Toro products exported from the United States or Canada should contact their Toro Distributor (Dealer) to obtain guarantee policies for your country, province, or state. If for any reason you are dissatisfied with your Distributor's service or have difficulty obtaining guarantee information, contact the Toro importer. If all other remedies fail, you may contact us at Toro Warranty Company.

*Residential purposes means use of the product on the same lot as your home. Use at more than one location, or institutional or rental use, is considered commercial use, and the commercial use warranty would apply.