TORO®

MODEL NO. 30789–50301 Thru 80001 & UP

PARTS CATALOG

GROUNDSMASTER® 345
TRACTION UNIT

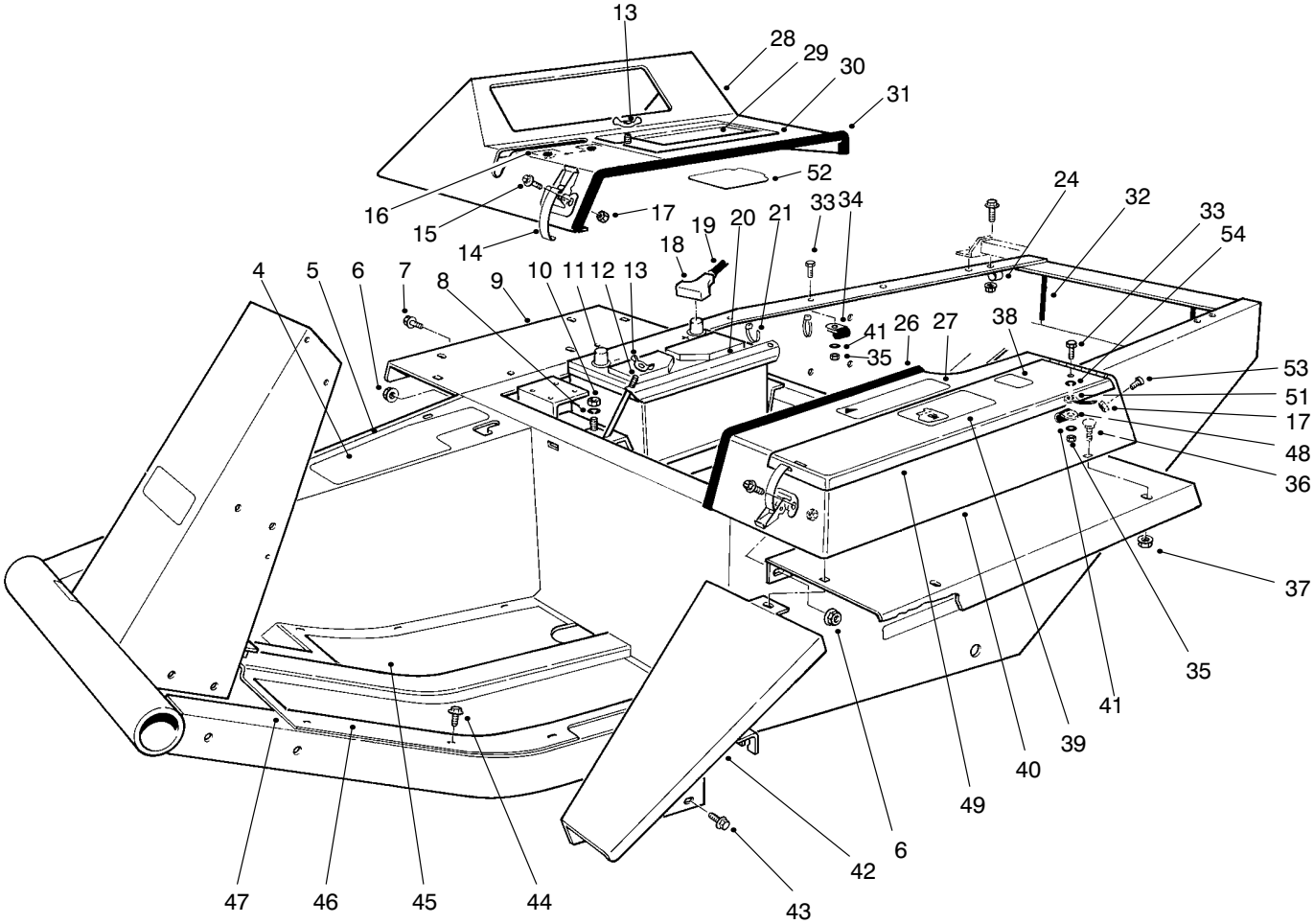

MAIN FRAME ASSEMBLY

Ref. No.	Part No.	Description	No. Used
4	66–6390	Decal–Caution	1
5	21–2660	Footrest	1
7	3234–12	Screw–HHF	4
8	3253–4	Washer–Lock	2
9	72–3690	Fender	2
10	3217–6	Nut	2
11	55–7290	Battery (Group Size 24)	1
12	24–6390	Stud–Battery Hold Down	2
13	32103–2	Nut–Wing	2
14	249–21	Hook Clamp	3
15	3290–144	Screw–Machine	6
16	27–7290	Decal–Power Take Off	1
17	3296–2	Nut–Lock	9
18	28–1280	Boot–Cable	1
†19		Cable–Battery Positive	1
20	24–6420	Hold Down–Battery	1

Ref. No.	Part No.	Description	No. Used
21	3290–378	Cable Tie	2
23	3234–11	Capscrew w/Locking Flange	5
24	2412–39	Clamp	2
25	3290–357	Nut–Lock, Flange	5
26	37–9650	Trim	1
27	67–1710	Decal–Caution	1
28	38–4550	Instrument Cover	1
29	92–7802	Decal–Starting Instructions	1
30	92–7800	Cover–Battery Access	1
		(Incl. Ref. #29 & 52)	1
31	39–8020	Trim–Instrument Cover	1
32	43–4300	Trim–Rear Frame	2
33	322–6	Screw–HH	1
34	2412–74	Clamp	1
35	3296–29	Nut–Lock	2
36	3229–1	Bolt–Carriage	5

†Obtain Locally

© The TORO Company – 1994, Rev. 1997
All Rights Reserved

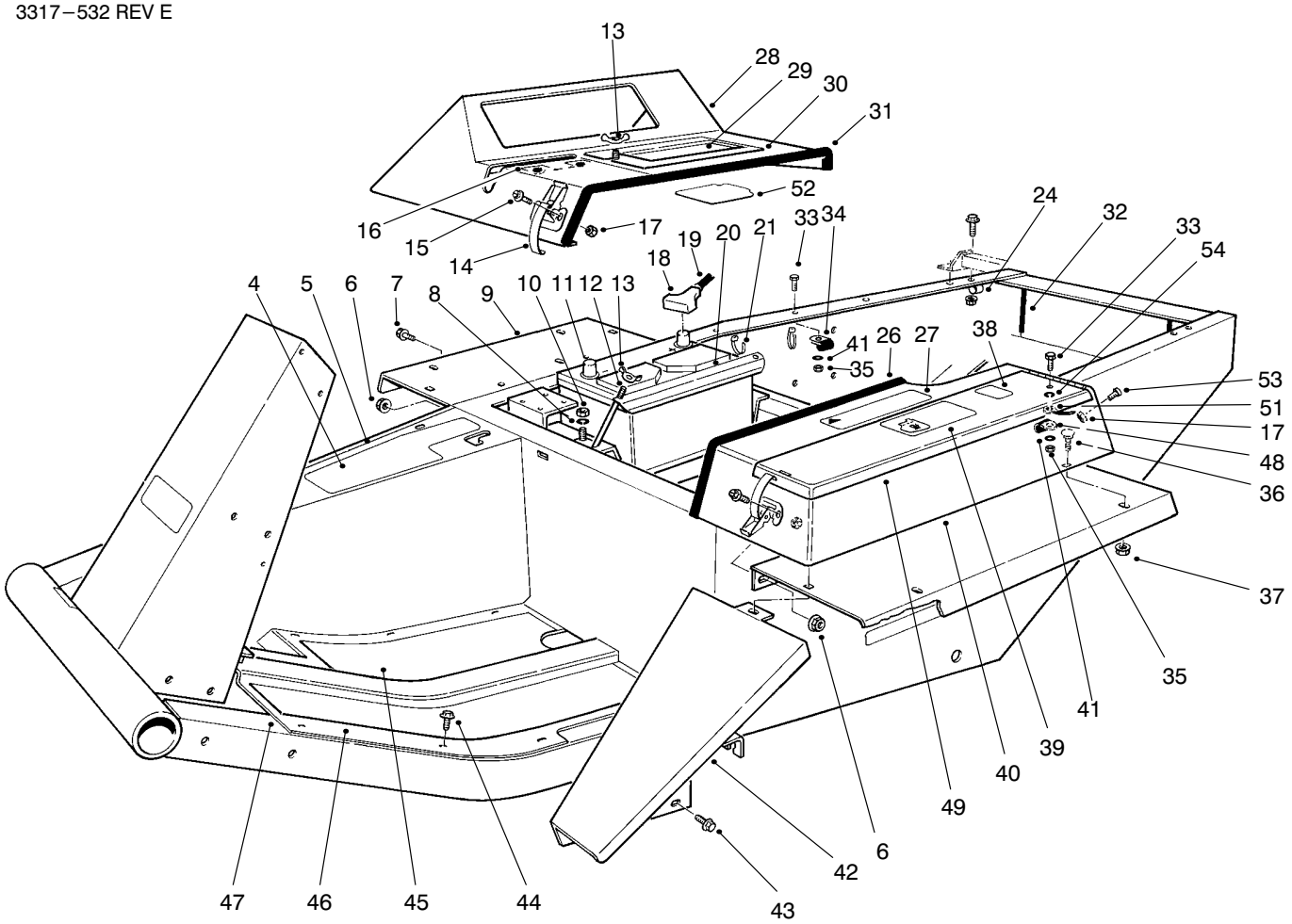

MAIN FRAME ASSEMBLY (Continued)

Ref. No.	Part No.	Description	No. Used
37	32128−13	Nut−Lock, Flange	5
38	53−4420	Decal−Fuel	1
39	27−7310	Decal−Refueling	1
40	93−3183	Tool Box (Incl. Ref. #27)	1
41	3256−23	Washer−Flat	2
42	68−8610	Fender−Extension	1
43	3234−14	Screw−HH	2
44	32144−10	Screw−Self Tapping	11
45	21−2770	Pad−Foot Rest R.H.	1

Ref. No.	Part No.	Description	No. Used
46	21−2760	Pad−Foot Rest L.H.	1
47	88−0070	Floor Plate	1
48	98−3883	Clamp−Wire	1
49	93−3184	Cover (Incl. Ref. # 39)	1
51	18−2770	Cable−Ground	1
52	92−7801	Shield−Cover, Battery	1
53	3290−144	Screw−HH	4
54	3254−2	Washer−Lock	1

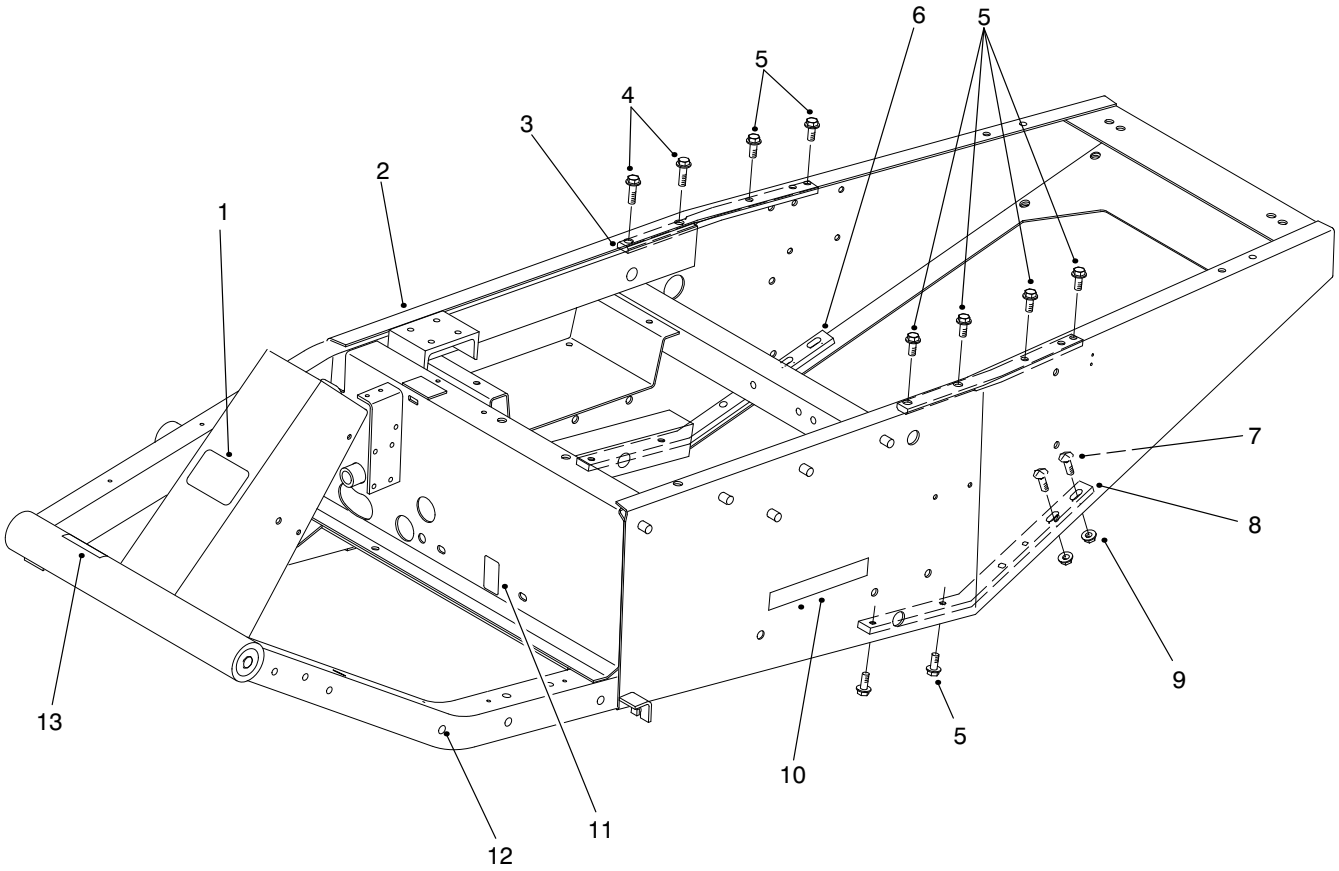

T−2802

MAIN FRAME ASSEMBLY (Continued)

Ref. No.	Part No.	Description	No. Used
1	70−2200	Decal−Toro	1
2	98−3879	Asm−Frame (Incl. Ref. #1, & 3−13)	1
3	98−3866	Brace−Upper	2
4	3234−24	Screw−HHF	2
5	3234−25	Screw−HHF	10
6	98−3865	Brace−Lower Right	1

Ref. No.	Part No.	Description	No. Used
7	3231−25	Screw−Carriage	4
8	98−3864	Brace−Lower Left	1
9	32128−21	Nut−Lock HFH	4
10	67−1720	Decal−Torque	2
11	53−4430	Decal−Oil Fill	1
12	32148−9	Insert−Threaded	1
13	27−7320	Decal−Traction Pedal	1

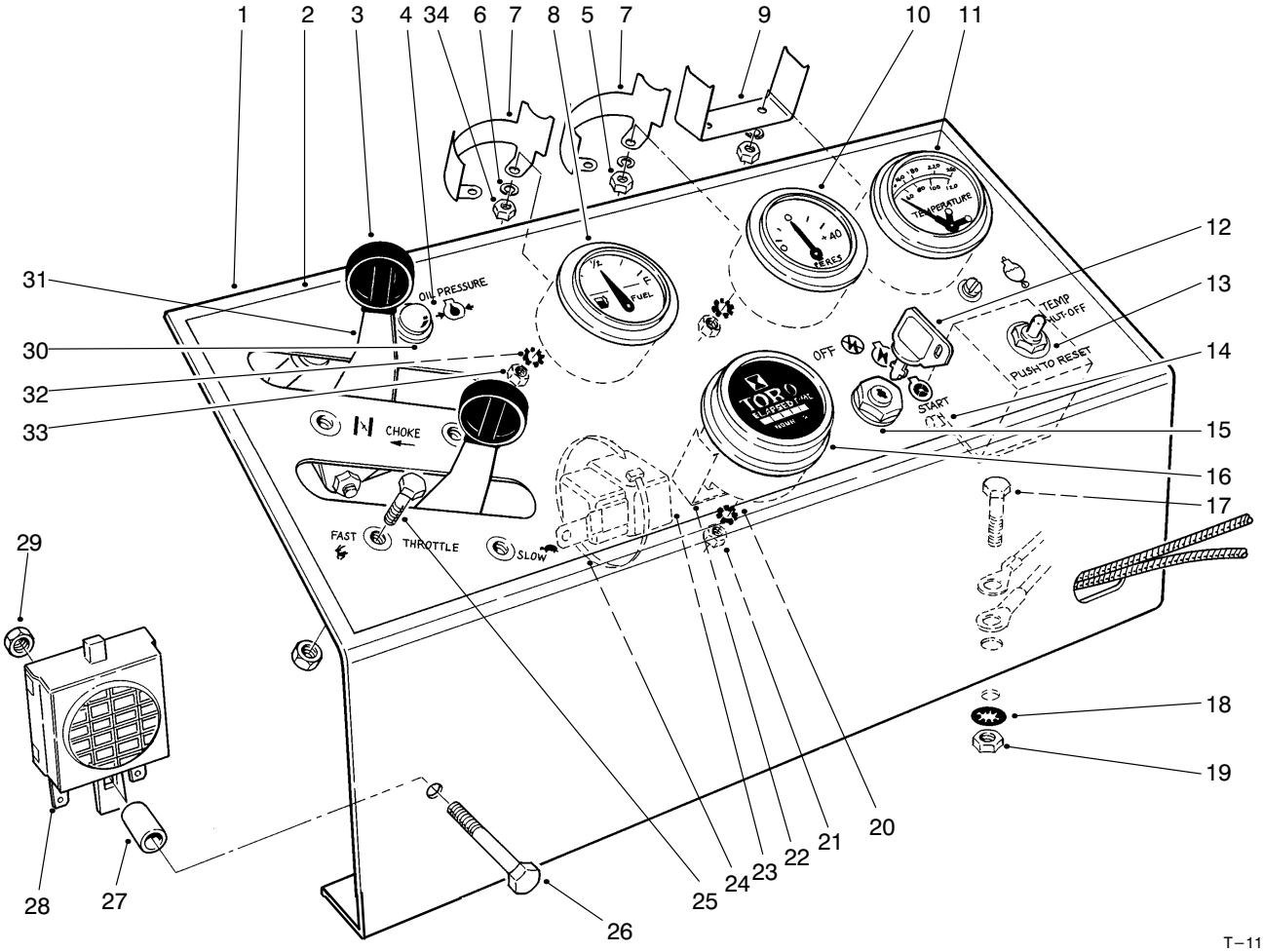

T−1175−1

INSTRUMENT PANEL ASSEMBLY

Ref. No.	Part No.	Description	No. Used
1	86−9370	Panel−Instrument	1
2	85−7470	Decal−Instrument Panel	1
3	233−35	Knob−Control	2
4	218−516	Lens	1
5	3219−14	Nut	4
6	3254−1	Washer−Lock	6
7	38−1670	Mounting Clamp	2
8	38−1650	Fuel Gauge (Incl. Ref. #5−7, 32 & 33)	1
9	218−539	Clamp	1
10	38−1660	Ammeter (Incl. Ref. #5−7, 32 & 33)	1
11	67−8550	Engine Temperature Gauge (Incl. Ref. #5, 6 & 9)	1
12	63−8360	Key	1
13	26−6740	Temperature Reset Relay	1
†14		Fuse Temp. Relay 14 amp SFE	1
15	27−2360	Switch	1
16	12−9990	Hour Meter (Incl. Ref. #20−22)	1

Ref. No.	Part No.	Description	No. Used
17	322−5	Screw−HH	2
18	3254−2	Washer−Lock, Int. Tooth	6
19	3217−6	Nut	2
20	3255−5	Washer−Lock	1
21	3217−26	Nut−Hex.	1
22	218−515	Mounting Bracket	1
23	63−7590	Relay	1
24	3290−379	Cable Tie	A/R
25	3290−134	Screw Machine Hex. Hd.	4
26	3290−360	Screw Machine Hex. Hd.	1
27	22−7810	Spacer	1
28	22−7820	Asm−Buzzer	1
29	3296−12	Nut−Lock	5
30	44−2210	Warning Light (Incl. Ref. #4)	1
31	67−8560	Throttle & Choke Control (Incl. Ref. #3)	2
32	3255−24	Washer−Lock	5
33	3217−29	Nut−Hex.	6
34	3217−27	Nut−Hex.	2

†Obtain Locally

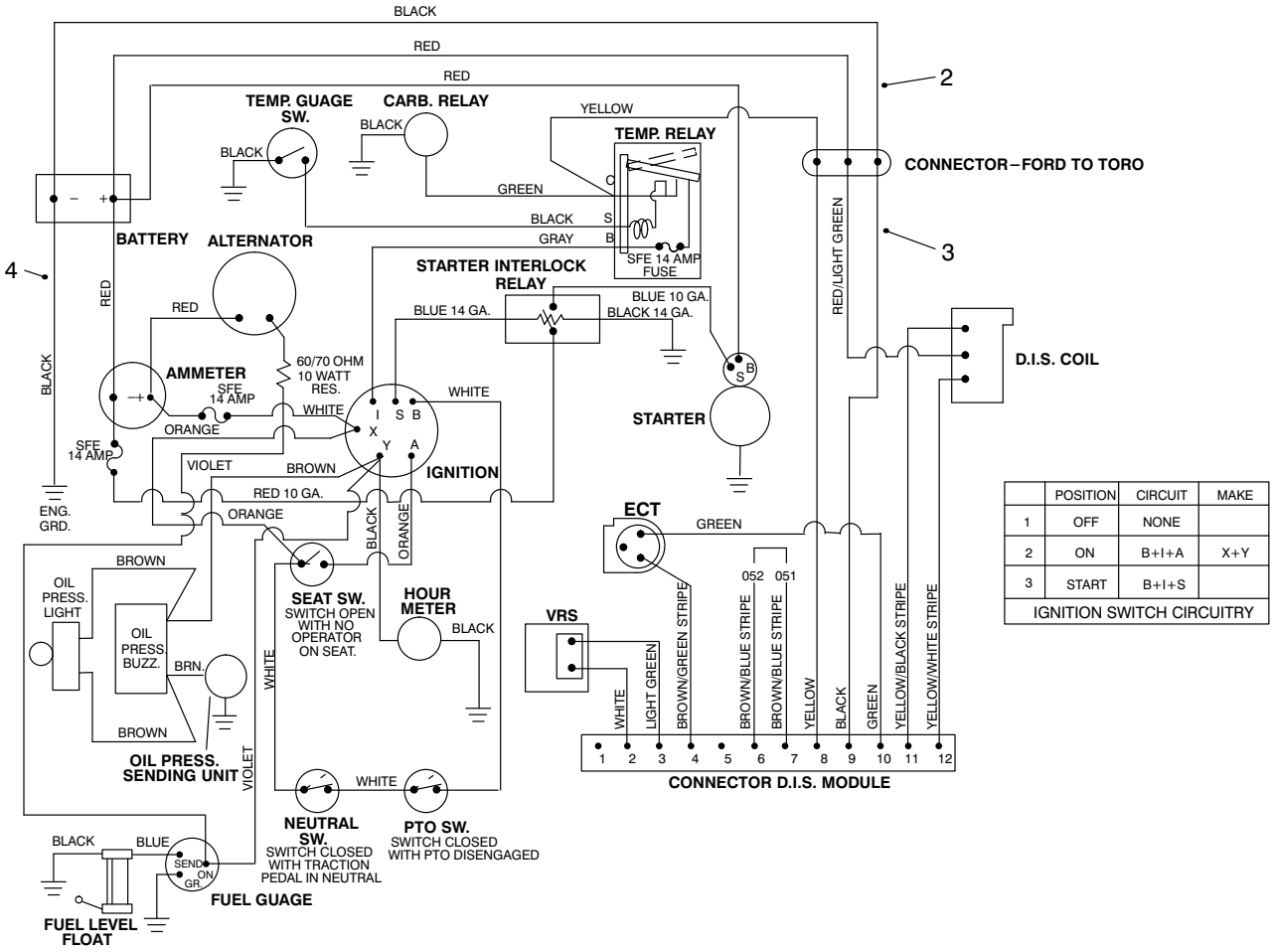

	POSITION	CIRCUIT	MAKE
1	OFF	NONE	
2	ON	B+I+A	X+Y
3	START	B+I+S	
IGNITION SWITCH CIRCUITRY			

T−0915−1

ELECTRICAL SCHEMATIC

Ref. No.	Part No.	Description	No. Used
2	93−9741	Asm−Wire−Harness	1

Ref. No.	Part No.	Description	No. Used
†3	E9JL−12A200−AC	Wire− Harness (Ford)	1
4	67−8540	Cable−Ground	1

†Obtain from your local Ford Power Products Dealer.

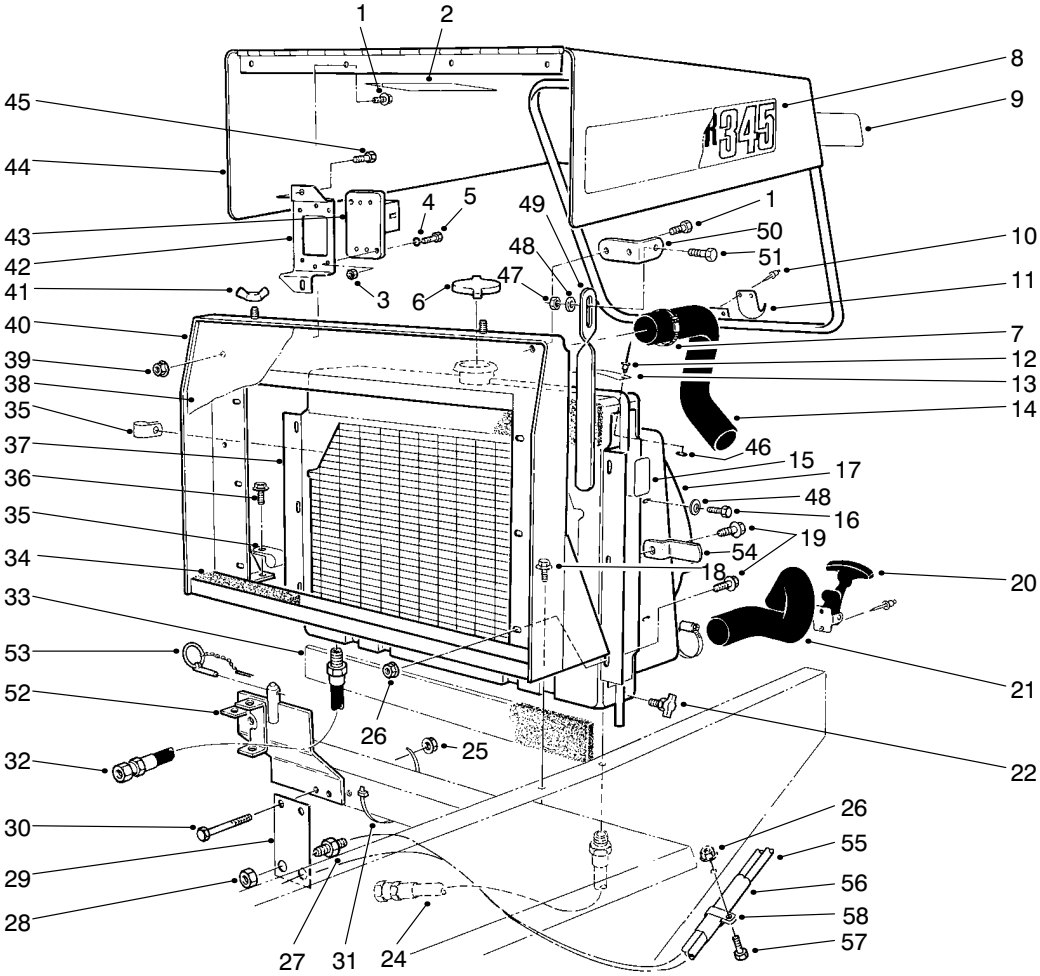

RADIATOR & HOOD ASSEMBLY

Ref. No.	Part No.	Description	No. Used
1	32144−10	Screw−TAP	5
2	82−8970	Decal−Coolant Engine	1
3	48−7890	Nut−Metric	2
4	43−5930	Washer−Metric	2
5	48−7630	Screw−Metric	2
6	66−3240	Cap−Pressure Radiator	1
7	2412−3	Clamp−Hose	4
8	93−3189	Decal−Groundsmaster 345	2
9	66−6140	Decal−Toro	1
10	3290−271	Rivet	4
11	249−40	Keeper	1
12	3269−13	Rivet	2
13	76−8750	Decal−Warning	1
14	70−1630	Hose−Radiator Upper	1
15	77−3100	Decal−Warning	2
16	32104−109	Screw−HHF	4
17	67−8640	Shroud−Radiator	1
18	3234−1	Screw−HHF	2
19	3234−14	Screw−HHF	6
20	59−9740	Latch−Draw (Inc. Ref. #11)	1
21	67−8660	Hose−Radiator Lower	1
22	304−46	Draincock	1
24	63−9010	Asm−Hose (Cooler to Pump)	1
25	32128−21	Nut−HF	3

Ref. No.	Part No.	Description	No. Used
26	32128−20	Nut−HF	7
27	340−71	Union−Bulkhead	2
28	340−70	Nut−Lock, Bulkhead	2
29	68−9160	Bracket	1
30	323−14	Screw−HH	3
31	3290−379	Tie−Cable	A/R
32	63−8960	Asm−Hose	1
33	43−3320	Foam−Radiator	2
34	70−1790	Strip−Foam Sealing	1
35	2412−39	Clamp	2
36	3234−24	Screw−HHF	2
37	67−8590	ASM−Radiator	1
38	67−9030	Grille−Radiator	1
39	32128−33	Nut−Lock, Flange	2
40	86−9400	Support−Radiator	1
41	32103−2	Nut−Wing	2
42	70−1660	Bracket−E.S.C.	1
†43		Module−E.S.C.	1
44	14−8459	Hood	1
45	321−39	Screw−HH	2
46	3269−10	Washer	2
47	3296−16	Nut−Lock	1
48	3256−22	Washer−Flat	5
49	84−5380	Strap−Hood Prop	1
50	84−5330	Bracket−Hood Prop	1
51	321−6	Screw−HH	1

†Obtain from your local Ford Power Products Dealer.

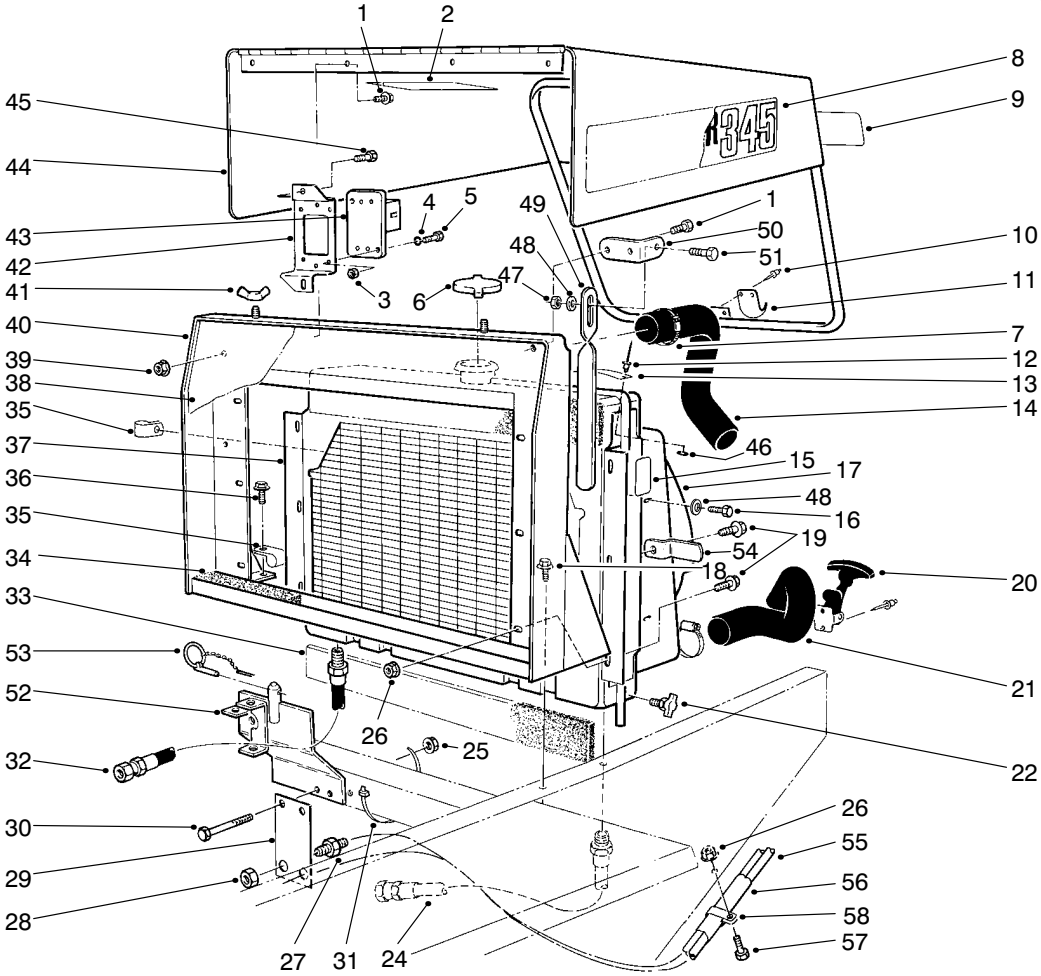

RADIATOR & HOOD ASSEMBLY (Continued)

Ref. No.	Part No.	Description	No. Used
52	86−9410	Support−Seat	1
53	283−76	Pin−Lynch	1
54	86−7060	Bracket−Hood Hold Down	1
55	68−9710	Hose−Steering Cylinder	2

Ref. No.	Part No.	Description	No. Used
56	56−7980	Sleeve−Protective	1
57	322−6	Screw−HH	1
58	2412−74	Clamp	1

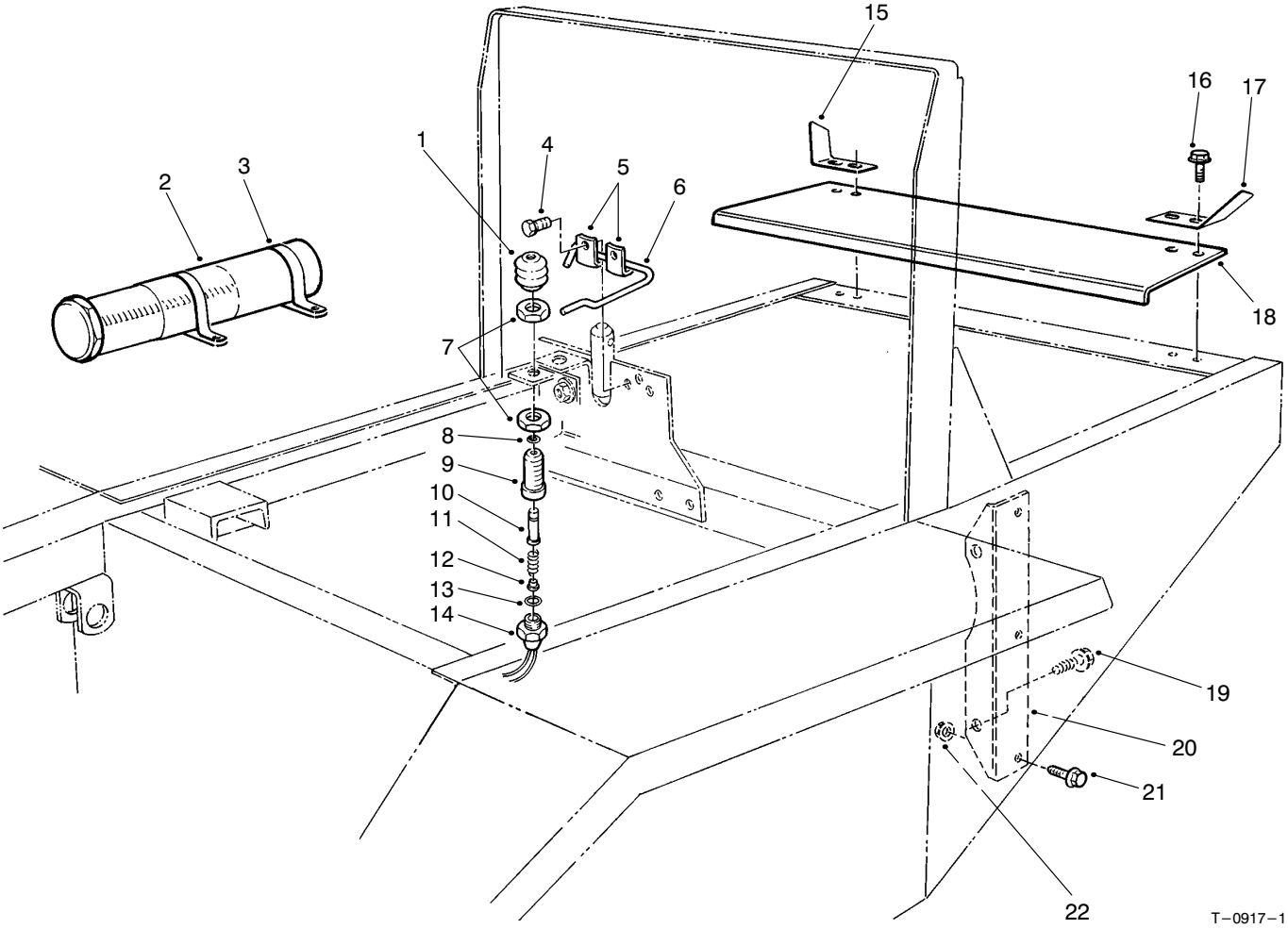

INTERLOCK ASSEMBLY

Ref. No.	Part No.	Description	No. Used
1	43−8870	Boot−Switch	1
2	74−0720	Tube−Manual	1
3	2412−133	R−Clamp	2
4	32144−10	Screw−TAP	2
5	3−6657	Clip	2
6	86−7040	Rod−Seat Prop	1
7	218−461	Nut−Jam	2
8	237−7	O−Ring	1
9	43−8620	Guide−Switch Pin	1
10	43−8860	Plunger−Switch	1
11	43−8600	Spring−Compression	1
12	43−8610	Guide−Spring & Ball Seat	1
13	237−30	O−Ring	1

Ref. No.	Part No.	Description	No. Used
14	72−4320	Switch−Ball	1
15	62−3010	Bracket−R.H.	1
16	3234−17	Screw−HHF	4
17	62−3020	Bracket−L.H.	1
18	70−1890	Guard−Flywheel	1
19	3234−6	Screw−HHF	2
20	67−8190	Bracket−Engine Support	2
21	3234−11	Screw−HHF	6
22	3290−357	Nut−Lock, Flange	6
*	43−9071	Asm−Switch (Incl. Ref.#1, 7−14, Qty. 1 of Item #7)	1

*Not Illustrated

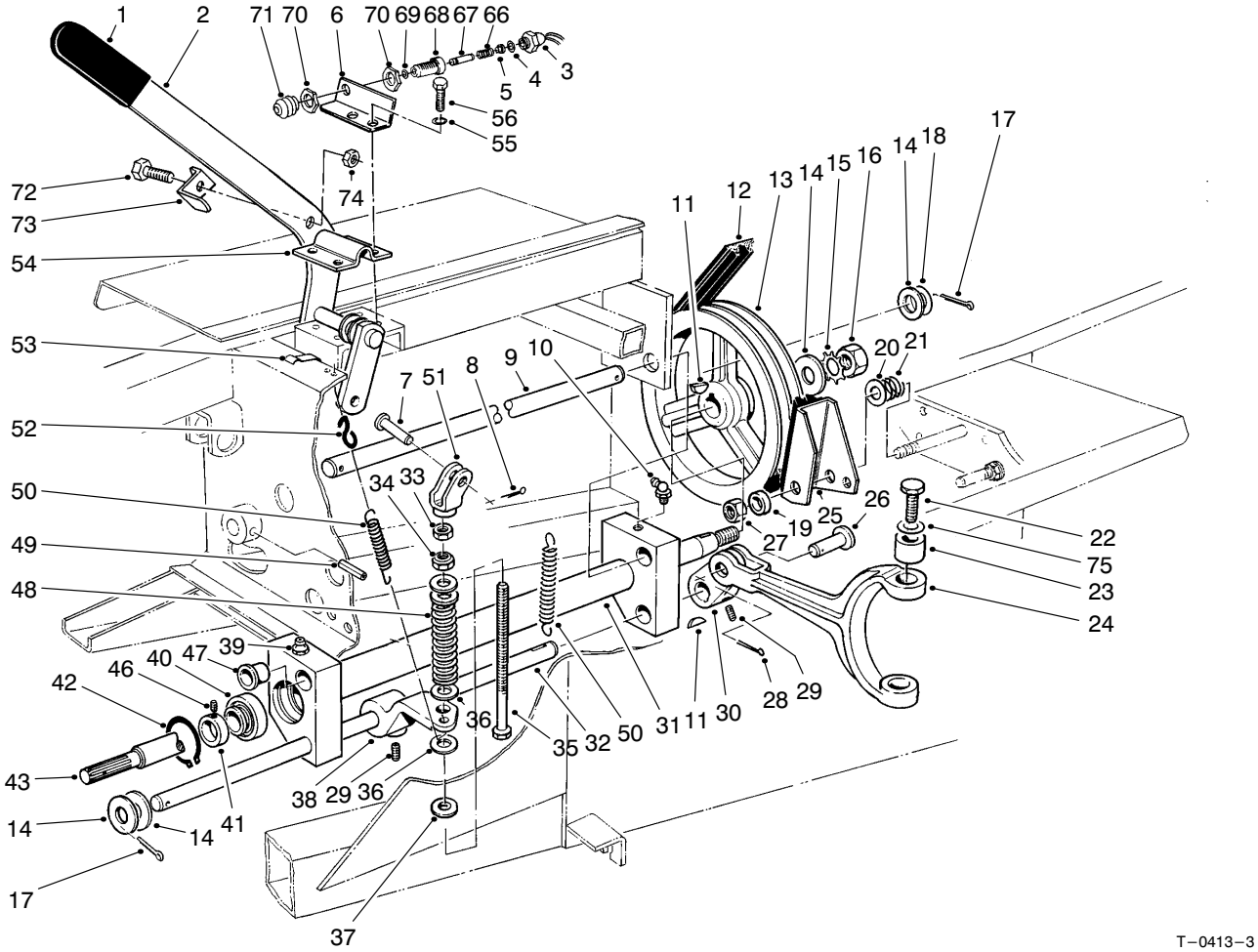

T–0413–3

POWER TAKE OFF ASSEMBLY

Ref. No.	Part No.	Description	No. Used
1	21–1880	Grip Handle	1
2	84–8500	Lever–P.T.O.	1
3	72–4320	Switch–Ball	1
4	237–30	O–Ring	1
5	43–8610	Guide–Spring & Ball Seat	1
6	84–8520	Bracket–P.T.O. Switch	1
7	283–42	Clevis Pin	1
8	3272–6	Cotter Pin	1
9	43–3860	Shaft–Pivot P.T.O.	1
10	302–10	Fitting–Grease	1
11	3257–5	Key–Woodruff	3
12	53–9660	V–Belt Torque Team	1
13	21–0230	Pulley– P.T.O.	1
14	3256–28	Washer–Flat	4
15	3254–7	Washer–Lock	1
16	3219–7	Nut–Hex.	1
17	3272–22	Pin–Cotter	2
18	3–6498	Washer	A/R
19	3–8812	Spacer	1
20	3256–6	Washer–Flat	1
21	5–1747	Spring	1
22	92–5727	Screw–HH	2
23	92–5723	Bushing–P.T.O. Fork	2
24	92–4060	Fork P.T.O.	1
25	27–7370	Asm–Brake, P.T.O.	1
26	93–3769	Clevis Pin	1

Ref. No.	Part No.	Description	No. Used
27	3296–28	Nut–Lock	1
28	3272–11	Pin–Cotter	1
29	3246–3	Screw–Set	4
30	92–4058	Arm–P.T.O.	1
31	43–5500	Pivot P.T.O.	1
32	43–5550	Shaft– P.T.O. Actuator	1
33	3219–3	Nut	1
34	3296–6	Nut–Lock	1
35	27–7900	Screw–Adjusting	1
36	3256–41	Washer–Flat	4
37	5–0652	Spacer	1
38	43–5570	Arm–P.T.O. Actuator	1
39	302–2	Grease Fitting	1
40	251–252	Ball Bearing (Incl. Ref. #41)	2
41	251–234	Lock Collar (Incl. Ref. #46)	2
42	32120–22	Ring–Retaining	2
43	43–5540	Shaft P.T.O.	1
44	62–4260	Asm–Drive Shaft	1
46	3246–1	Screw–Set	2
47	256–113	Bushing–Flange	4
48	21–0400	Spring–Compression	1
49	32121–9	Pin–Roll	1
50	21–1830	Spring–Tension	2
51	43–5630	Yoke–P.T.O.	1

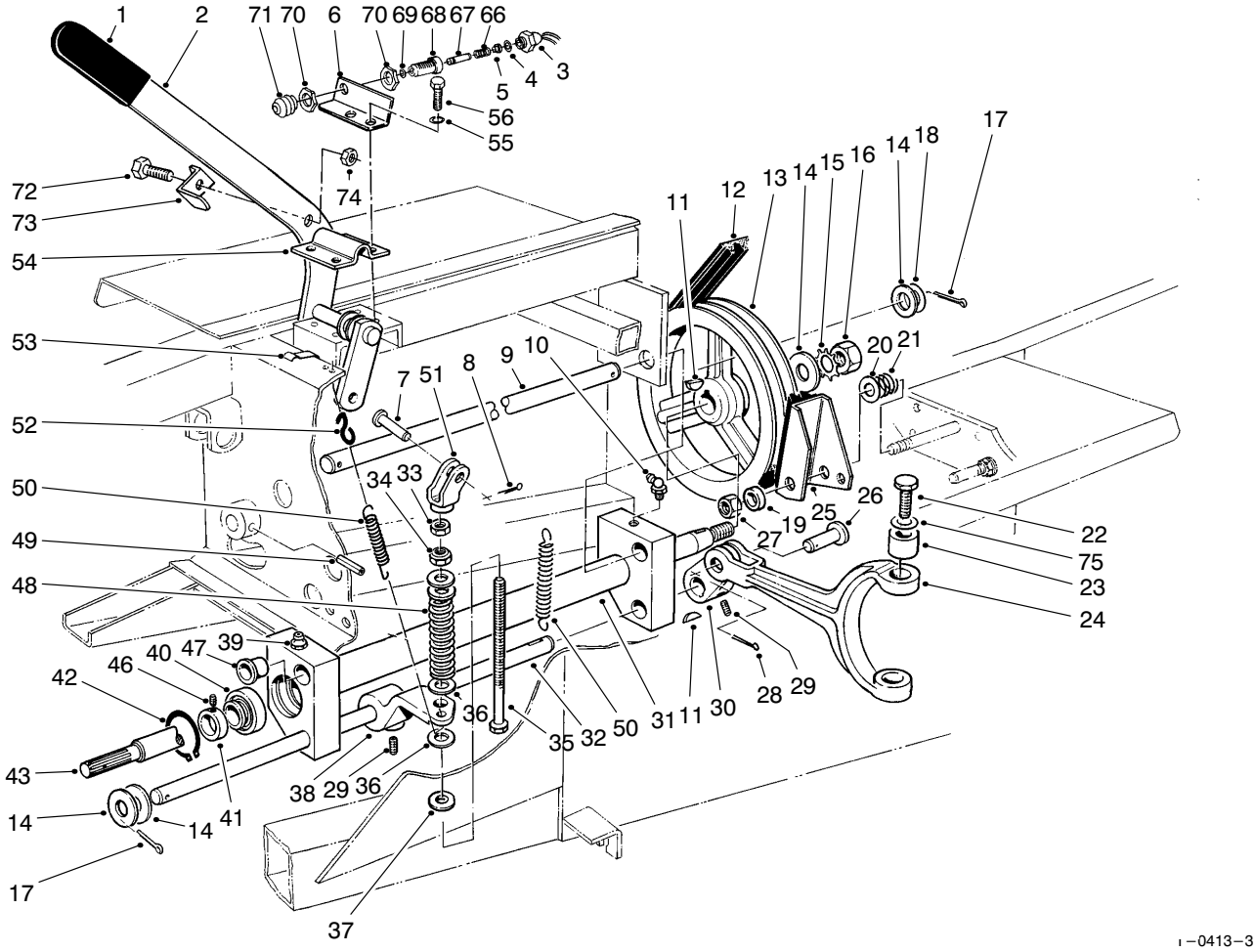

POWER TAKE OFF ASSEMBLY (Continued)

Ref. No.	Part No.	Description	No. Used
52	5−0701	Spring Anchor	1
53	212−93	Wire Clip	1
54	21−1600	Clamp P.T.O. Lever	1
55	3253−21	Washer−Lock	4
56	32104−6	Screw−TAP	4
66	43−8600	Spring−Compression	1
67	43−8860	Plunger−Switch	1
68	43−8620	Guide−Switch Pin	1
69	237−7	O−Ring	1

Ref. No.	Part No.	Description	No. Used
70	218−461	Nut−Jam	2
71	43−8870	Boot−Switch	1
72	321−4	Screw−HH	1
73	86−7050	Bracket−Switch Actuator	1
74	3296−16	Nut−Lock	1
75	75−9890	Washer−Shim	A/R
*	43−9071	Asm−Switch (Incl. Ref. #3−5 & 66−71) (Qty. 1 of Item #70)	1

*Not Illustrated

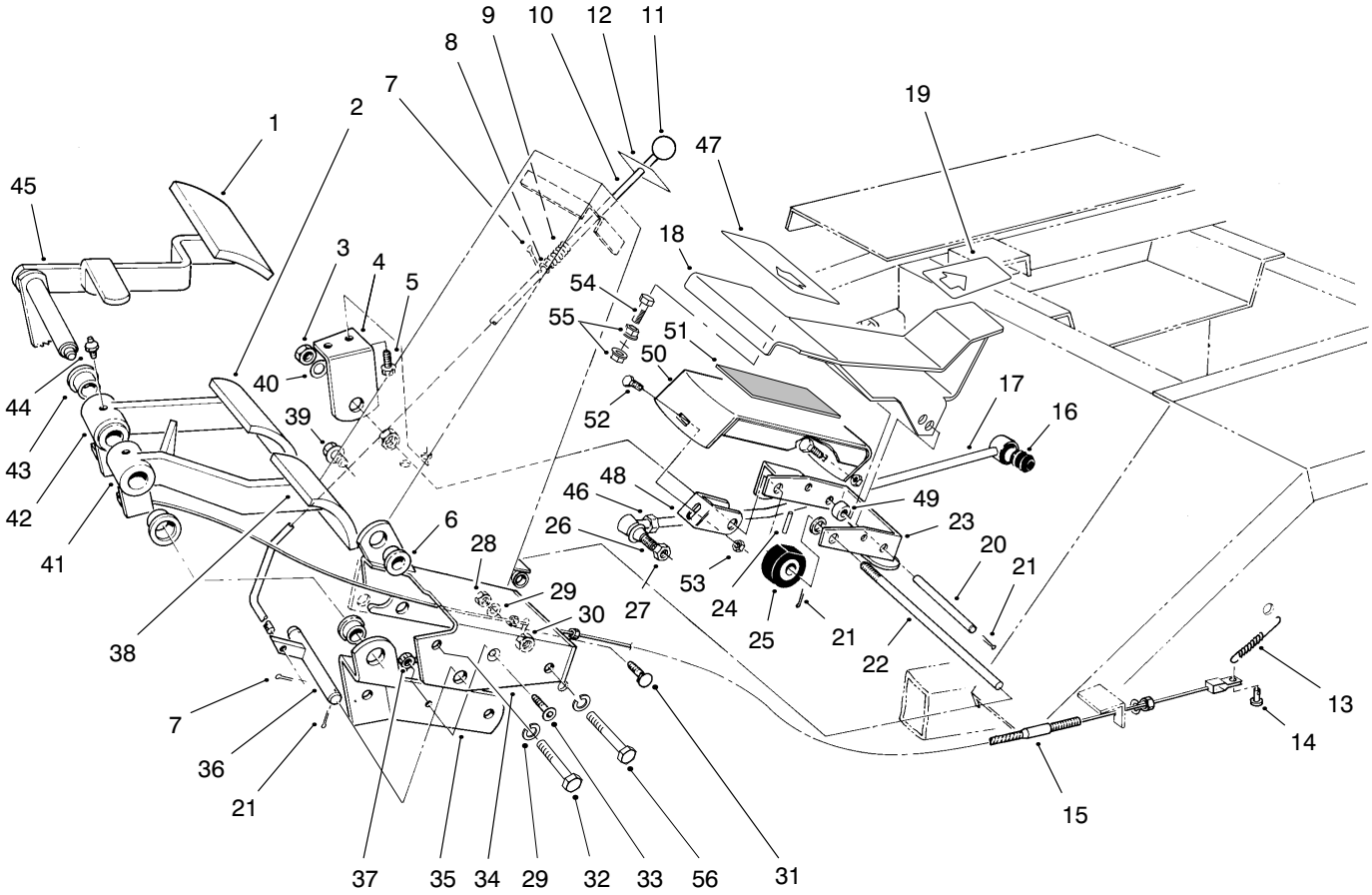

T−0415−4

BRAKE PEDAL ASSEMBLY

Ref. No.	Part No.	Description	No. Used
1	7−3900	Pad−Brake	1
2	27−7580	Pad−Right Turn	1
3	3218−5	Nut−Jam	2
4	21−2850	Mount−R.H. Pedal	1
5	11−0590	Screw−TAP	2
6	256−156	Bushing	5
7	3272−5	Pin−Cotter	3
8	3256−22	Washer−Flat	1
9	95−1821	Spring−Compression	1
10	82−8670	Rod−Brake Latch	1
11	233−17	Knob	1
12	82−8930	Decal−Parking Brake	1
13	3−7243	Spring−Extension	2
14	283−58	Pin−Clevis	2
15	21−3380	Cable−L.H. Brake	1
*	21−3370	Cable−R.H. Brake	1
16	23−2270	Bushing−Rubber	1
17	23−2240	Rod−Pump Control	1
18	94−3304	Pedal−Traction	1
19	94−3308	Pad−Rear Pedal	1
20	88−1640	Pin−Traction Pedal	1
21	3272−6	Pin−Cotter	6
22	88−1650	Shaft−Traction Pedal	1
23	88−1670	Bracket−Pivot (Inc. Ref. #6)	1
24	32121−16	Pin−Roll	1
25	28−5220	Wheel−Friction	1
26	21−0141	Asm−Socket R.H.	1
27	3220−3	Nut−Jam	1
28	3217−7	Nut−Hex	2

Ref. No.	Part No.	Description	No. Used
29	3253−21	Washer−Lock	4
30	32153−2	Nut−Lock	2
31	3231−21	Bolt−Carriage	2
32	323−13	Screw−HH	1
33	3274−47	Screw−HSFH	1
34	27−7590	Mount−Brake	1
35	27−9270	Mount−Brake Pivot Shaft	1
36	27−7640	Shaft−Brake Latch	1
37	32149−2	Nut	1
38	27−7570	Pad−Left Turn	1
39	3234−11	Screw−HH	3
40	3256−26	Washer−Flat	1
41	27−7490	Pedal−L.H. Brake (Incl. Ref. #43)	1
42	27−7510	Pedal−R.H. Brake (Incl. Ref. #43)	1
43	256−10	Bushing	4
44	302−5	Fitting−Grease	2
45	27−8550	Pedal−Parking Bake	1
46	3220−5	Nut−Jam	1
47	94−3307	Pad−Front Pedal	1
48	88−1680	Bracket−Footrest	1
49	88−0470	Tube−Pedal Spacer	1
50	88−1710	Footrest	1
51	88−1720	Pad−Footrest	1
52	3230−1	Bolt−Carriage	2
53	32128−25	Nut−Flange Lock	2
54	323−42	Screw−HH	1
55	32128−43	Nut−HF	2
56	323−14	Screw−HH	1

*Not Illustrated

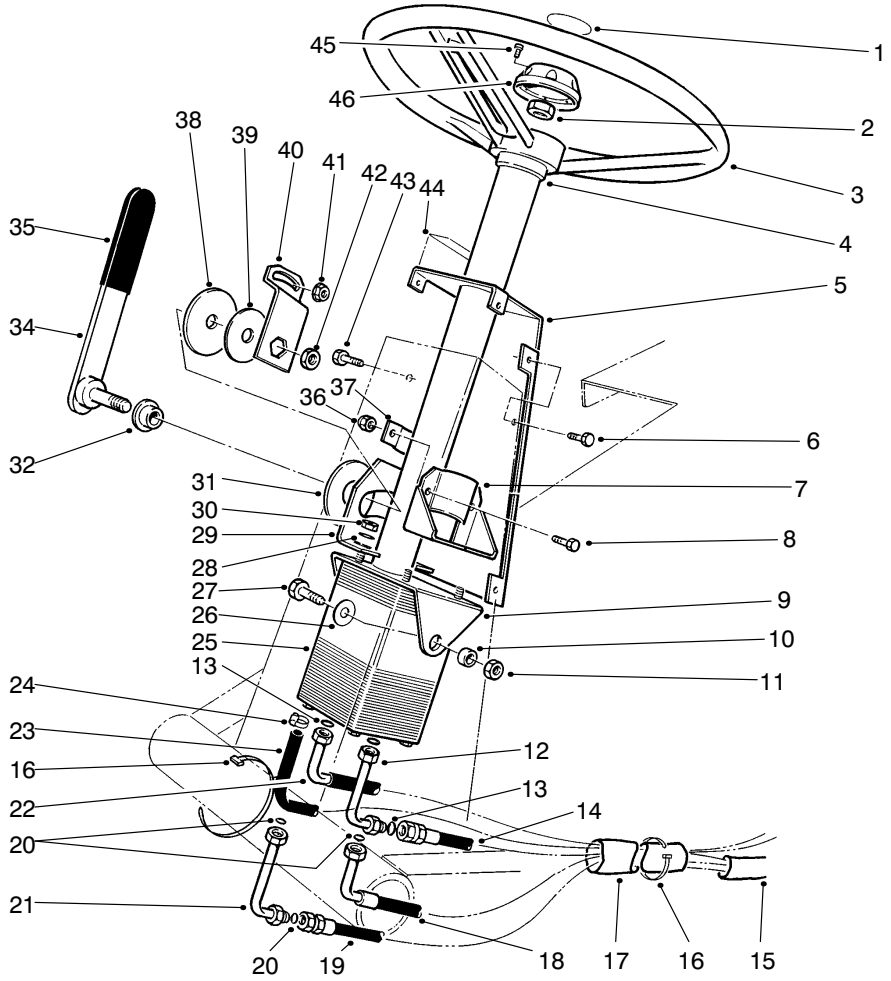

POWER STEERING ASSEMBLY

Ref. No.	Part No.	Description	No. Used
1	68−5370	Decal−Toro	1
2	66−9760	Nut−Hex.	1
3	75−0560	Asm−Steering Wheel (Incl. Ref. #45 & 46)	1
4	21−9260	Cover−Dust	1
5	82−8660	Cover−Tower	1
6	32144−10	Screw−HWHTF	6
7	67−8690	Support−Column	1
8	3234−17	Screw−HH	2
9	77−3120	Bracket−Mount, Column	1
10	80−2960	Spacer−Tower	2
11	32153−2	Nut−Hex.	2
12	82−8760	Elbow	1
13	237−30	O−Ring	3
14	63−8970	Hose−Trans. to Steering	1
15	70−1390	Sleeve−Protective	1
16	3290−379	Tie−Cable	A/R
17	70−1380	Sleeve−Protective	1
18	68−9730	Hose−Steering to Cylinder	1
19	68−9720	Hose−Cylinder to Steering	1
20	237−22	O−Ring	3
21	82−8770	Elbow	1
22	63−8980	Hose−Aux. to Valve	1

Ref. No.	Part No.	Description	No. Used
23	63−8990	Hose	1
24	2412−36	Clamp	2
25	92−7308	Valve−Steering, Power	1
26	3256−46	Washer−Flat	2
27	323−6	Screw−HH	2
28	3256−3	Washer−Flat	4
29	80−2940	Plate−Pivot	1
30	3296−20	Nut−Lock	4
31	31−0390	Disc−Friction	1
32	80−2980	Boss−Pin	1
34	93−1353	Lever−Steering, Tilt	1
35	21−1880	Grip−Handle	1
36	3296−29	Nut−Lock	2
37	82−8650	Clamp−Half	1
38	82−9010	Disc−Friction	1
39	80−2930	Washer	1
40	80−2880	Bracket−Steering, Tilt	1
41	32128−20	Nut−Flange	1
42	3218−7	Nut−Jam	1
43	322−4	Screw−HH	1
44	82−8940	Decal−Steering, Tilt	1
45	32144−21	Screw	1
46	68−5140	Cap−Wheel, Steering	1

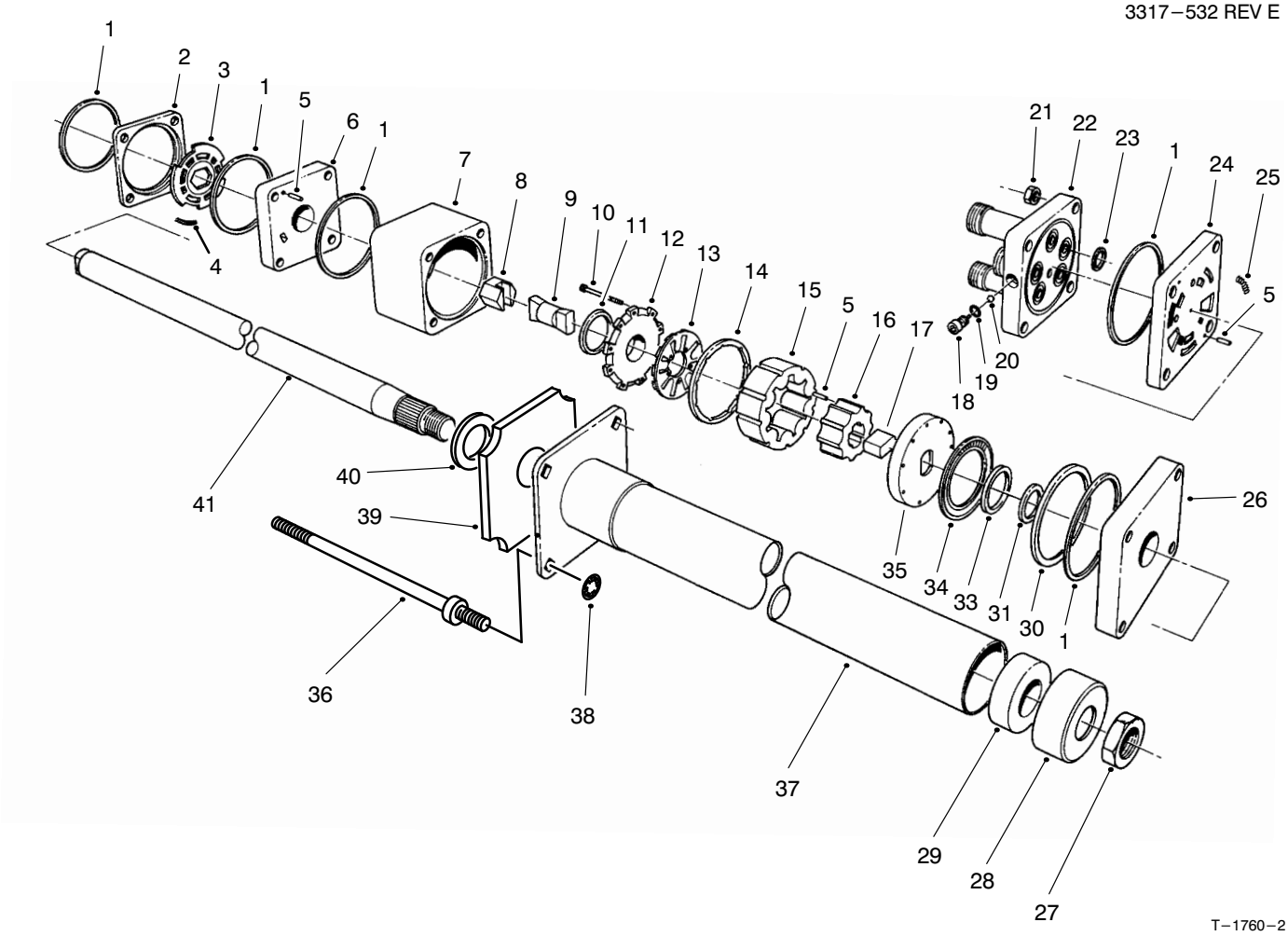

POWER STEERING & VALVE ASSEMBLY NO.92–7308

Ref. No.	Part No.	Description	No. Used
1		Ring–Seal	5
2		Ring–Valve	1
3		Plate–Valve	1
4		Spring	3
5		Pin–Alignment	9
6		Manifold–Isolation	1
7		Ring–Metering	1
8		Asm–Hex Drive	1
9		Link–Drive	1
10		Screw–HSH	11
11		Seal–Commutator	1
12		Cover–Commutator	1
13		Commutator	1
14		Ring–Commutator	1
15		Stator	1
16		Rotor	1
17		Spacer–Drive Link	1
18		Plug	1
19		O–Ring	1
20		Ball	1
21		Nut–Hex	4
22		Cover–Port	1
23		O–Ring	5
24		Manifold–Port	1
25		Spring	3

Ref. No.	Part No.	Description	No. Used
26		Plate–Upper Cover	1
27	3220–6	Nut	1
28	92–7315	Seal	1
29		Bearing	1
30		Spacer–Thrust Bearing	1
31		Spacer–Seal	1
33		Seal—Face	1
34		Bearing–Thrust	1
35		Plate–Drive	1
36	92–7310	Bolt–Special	4
37		Upper Cover & Jacket	1
38	92–7316	Nut–Push On	4
39	92–7317	Foam	1
40		Washer–Retaining	1
41		Shaft–Input	1
*	66–9970	Kit–Spring (Incl. Ref. #4 & 25)	1
*	66–9980	Kit–Seal (Incl. Ref. #1, 11, 19, 23 & 33)	1
*	66–9990	Kit–Needle Roller (Incl. Ref. #5)	1
*	92–7314	Asm–Column (Incl. Ref. #27–29 & 37–41)	1

*Not Illustrated

HYDRAULIC SCHEMATIC

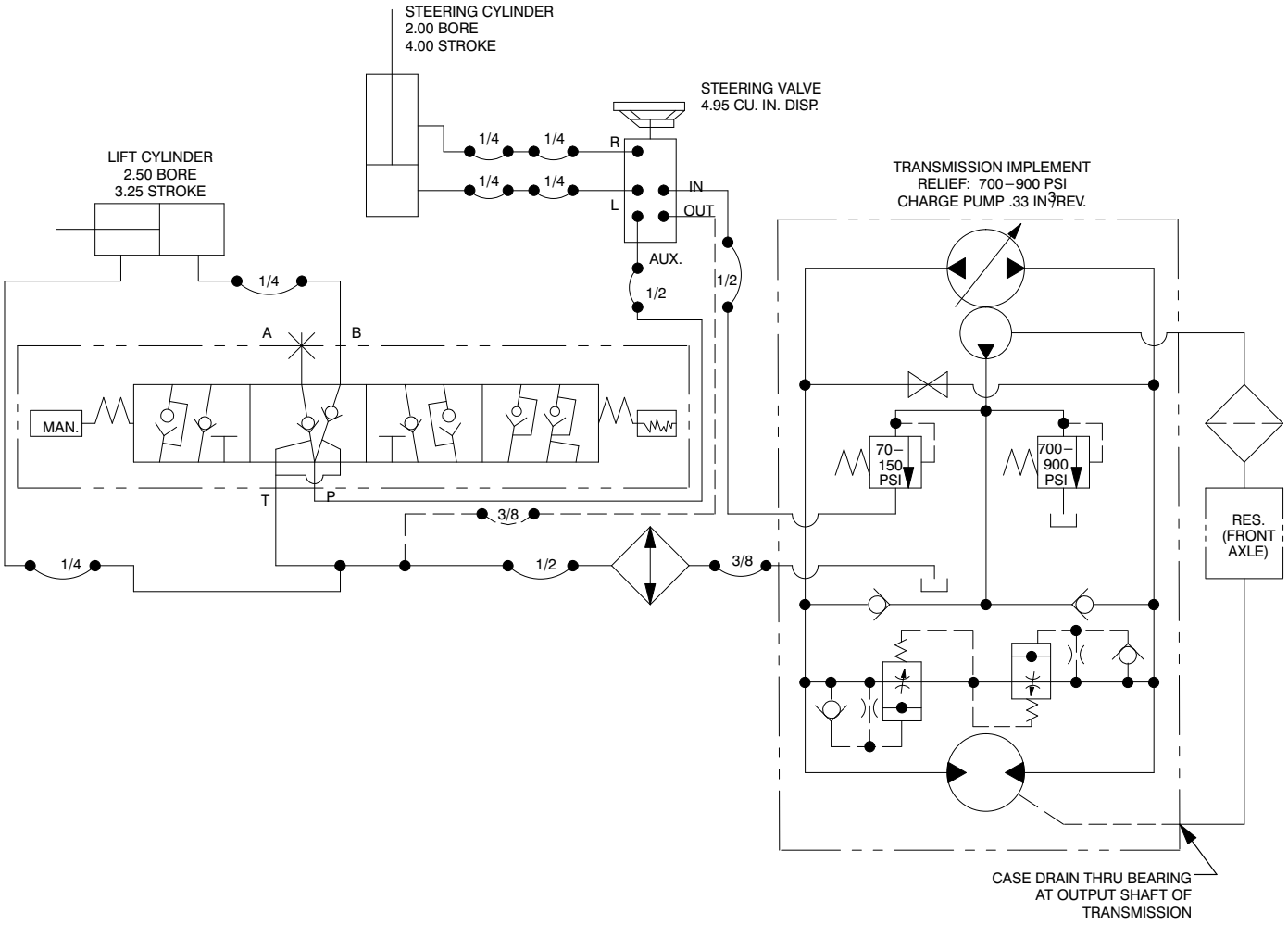

T−0418−2

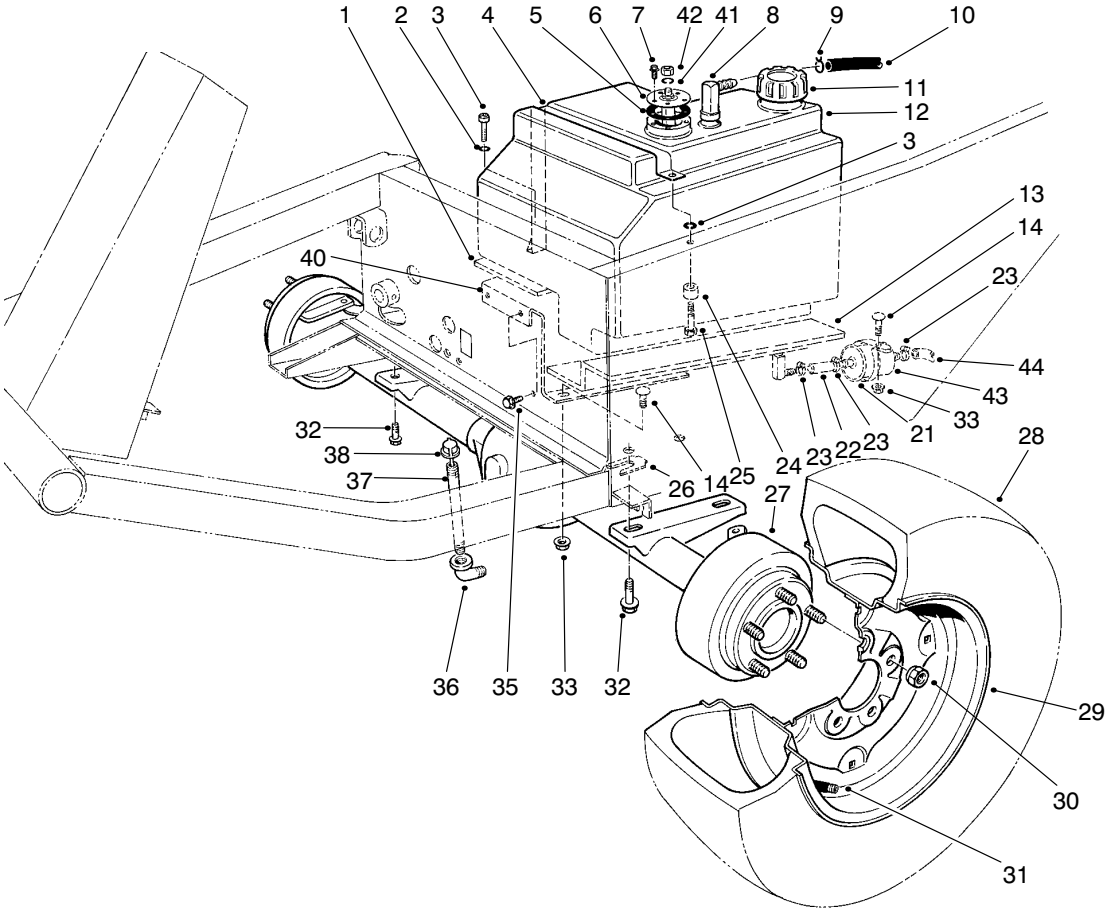

T−0218−1

FRONT AXLE & FUEL TANK ASSEMBLY

Ref. No.	Part No.	Description	No. Used
1	21−3600	Foam−Support Tank	1
2	3253−3	Washer−Lock	2
3	32104−96	Screw−HH	1
4	37−9550	Strap−Tank Fuel	1
5	62−7650	Gasket−Tank Fuel	1
6	62−6840	Sender−Fuel Level	1
7	32144−53	Screw−HWHTF	5
8	353−536	Fitting−Tank, Fuel	2
9	2412−6	Clamp	1
10	63−7630	Hose−Vent Fuel	1
11	55−3574	Cap−Tank Fuel	1
12	43−9110	Tank−Fuel (Incl. Ref. #8)	1
13	21−3610	Foam−Support Tank	1
14	3230−2	Bolt−Carriage	3
21	2412−96	Clamp−R	1
22	92−1662	Hose−Fuel	1
23	2412−108	Clamp	3
24	22−7810	Spacer	1
25	321−6	Screw−HH	1
26	42−6080	Shim−Axle	A/R
27	86−9600	Asm−Front Axle	1
28	231−101	Tire	2
*	231−95	Tire−23” x 10.5” x 12” 4 Ply (Optional) 4 Ply	2
*	69−9880	Tire−23” x 10.5” x 12” 6 Ply (Optional)	2

Ref. No.	Part No.	Description	No. Used
29	217−117	Rim	2
*	217−116	Rim−23” x 10.5” x 12” (Optional)	2
30	23−7270	Nut−Wheel	10
31	232−31	Stem−Valve	2
*	232−27	Stem−Valve 23 x 10.5 x 12 (Optional)	2
32	32144−67	Screw−Thread Forming	4
33	32128−20	Nut−Flange	3
35	3234−11	Screw−HHF	2
36	2811−9	Elbow−Street	1
37	289−37	Nipple−Pipe	1
38	23−5180	Dipstick	1
40	68−9760	Base−Tank Fuel	1
41	3253−17	Washer−Lock	1
42	3219−14	Nut	1
43	18−1520	Filter−Gas	1
44	92−1661	Hose−Fuel	1
*	62−7020	Asm−Wheel & Tire 4 Ply (23” x 10.5” x 12”) (Optional)	2
*	69−9870	Asm−Wheel & Tire 6 Ply (23” x 10.5” x 12”) (Optional)	2
*	231−90	Tube−Inner (Optional)	2
*	95−3093	Kit−400 Hour Filter (Incl. Ref. #43)	1

*Not Illustrated

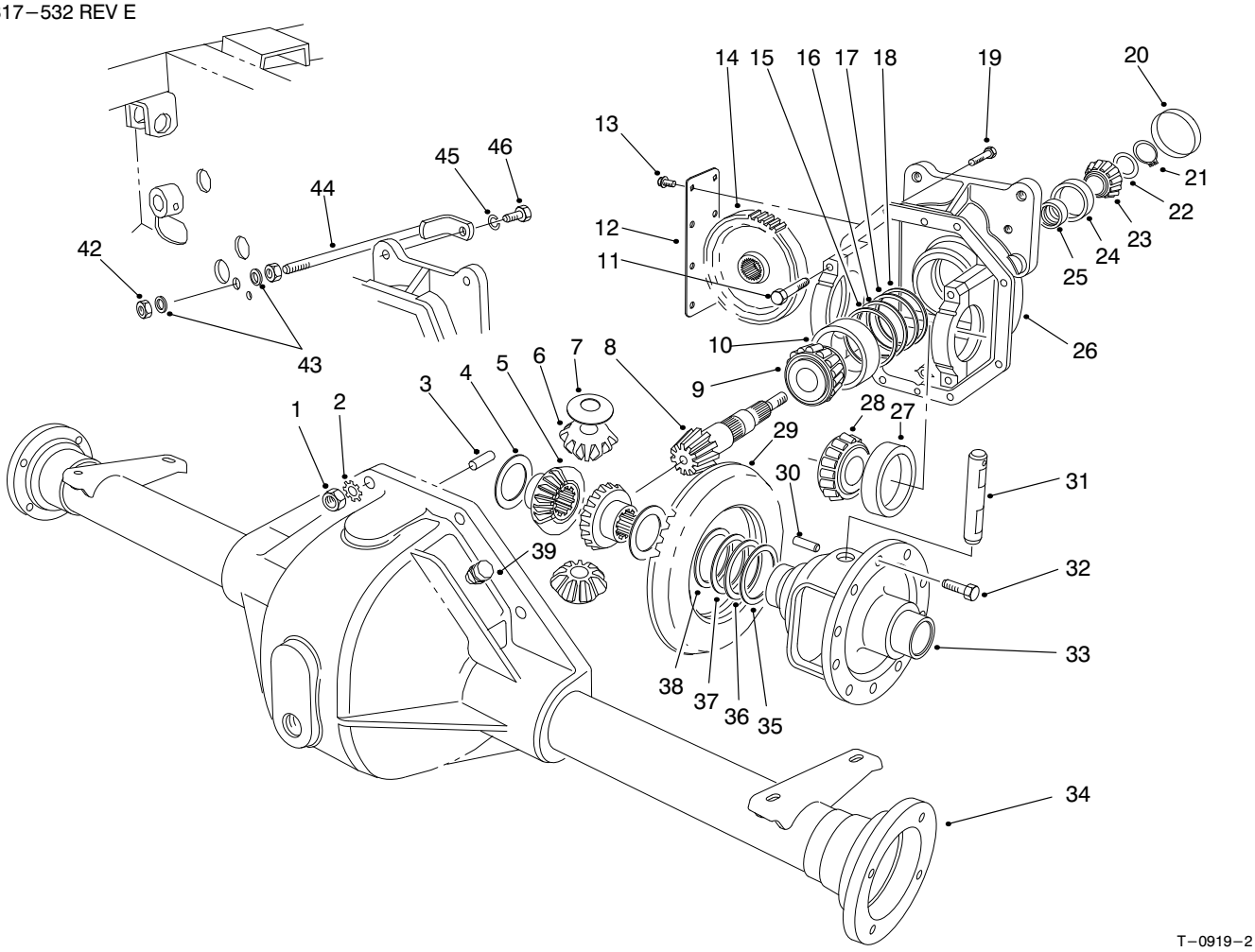

FRONT AXLE ASSEMBLY NO. 86−9600

Ref. No.	Part No.	Description	No. Used
1	3219−2	Nut	8
2	3255−8	Washer−Lock	8
3	21−8270	Dowel Pin	2
4	21−7720	Thrust Washer	2
5	24−8790	Differential Bevel Gear Side	2
6	21−7690	Pinion Gear	2
7	21−7730	Thrust Washer	2
8		Drive Pinion	1
9	43−6760	Roller Bearing Cone	1
10	43−6750	Roller Bearing Cup	1
11	92−1773	Screw−HH	4
12	21−7830	Gear Cover	1
13	32144−112	Thread Forming Screw	8
14	86−7230	Spur−Gear	1
15	43−6710	Adjustment Shim .003	A/R
16	43−6711	Adjustment Shim .005	A/R
17	43−6712	Adjustment Shim .010	A/R
18	43−6713	Adjustment Shim .030	A/R
19	3210−7	Screw−HH	8
20	21−7850	Cap−Plug	1
21	43−6550	Snap Ring	1
22	46−2210	Shim−Front Pinion Bearing (.031)	A/R
*	46−2211	Shim−Front Pinion Bearing (.033)	A/R
*	46−2212	Shim−Front Pinion Bearing (.035)	A/R

Ref. No.	Part No.	Description	No. Used
*22	46−2213	Shim−Front Pinion Bearing (.037)	A/R
*	46−2214	Shim−Front Pinion Bearing (.039)	A/R
*	46−2215	Shim−Front Pinion Bearing (.041)	A/R/
*	46−2216	Shim−Front Pinion Bearing (.043)	A/R
*	46−2220	Shim−Front Pinion Bearing (.045)	A/R
*	46−2221	Shim−Front Pinion Bearing (.047)	A/R
*	46−2222	Shim−Front Pinion Bearing (.049)	A/R
*	46−2223	Shim−Front Pinion Bearing (.051)	A/R
*	46−2224	Shim−Front Pinion Bearing (.053)	A/R
*	46−2225	Shim−Front Pinion Bearing (.055)	A/R
*	46−2226	Shim−Front Pinion Bearing (.057)	A/R
*	46−2410	Shim−Front Pinion Bearing (.062)	A/R
*	46−2411	Shim−Front Pinion Bearing (.064)	A/R

*Not Illustrated

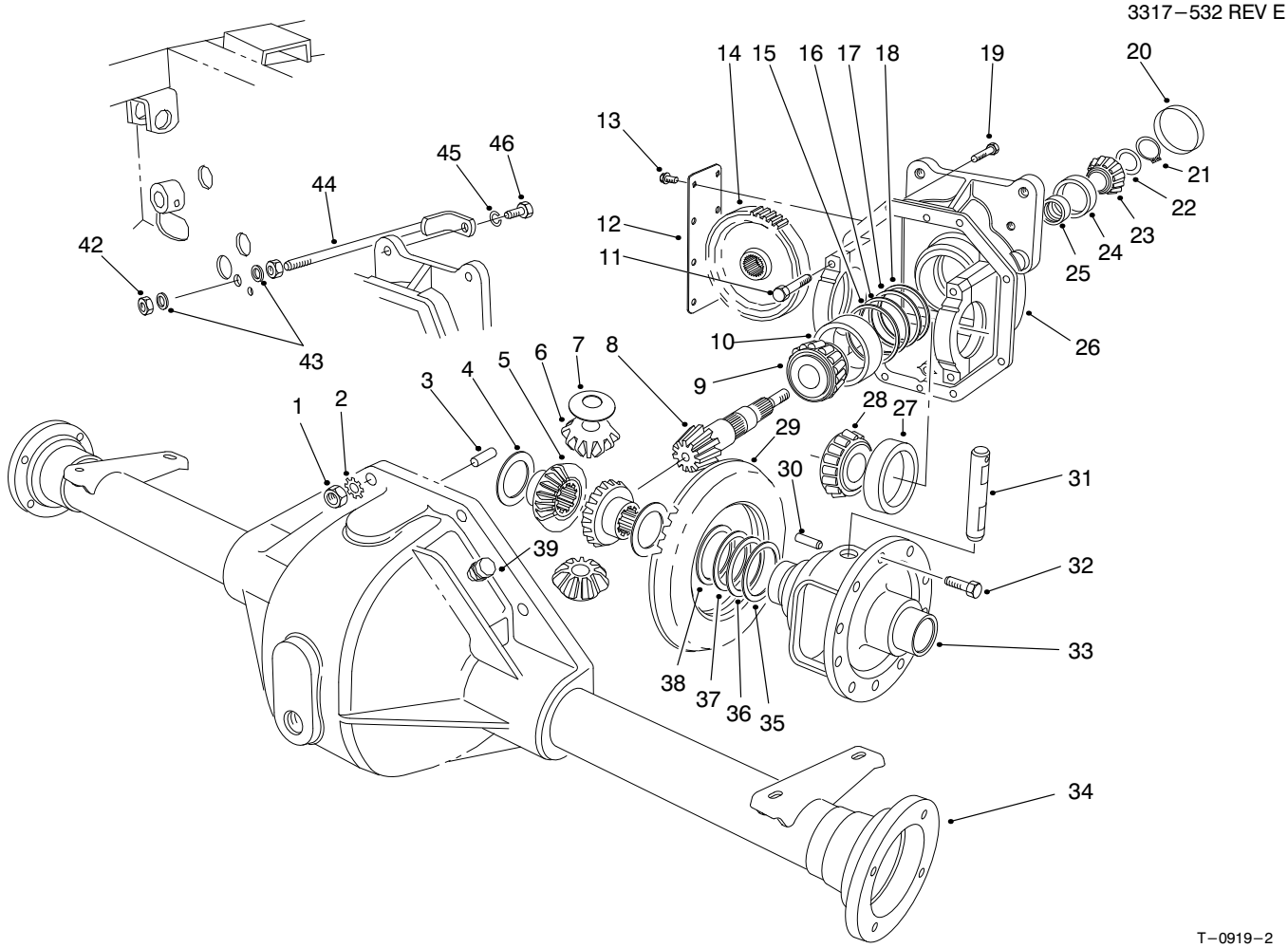

FRONT AXLE ASSEMBLY NO. 86−9600 (Continued)

Ref. No.	Part No.	Description	No. Used
*22	46−2412	Shim−Front Pinion Bearing (.066)	A/R
*	46−2413	Shim−Front Pinion Bearing (.068)	A/R
*	46−2414	Shim−Front Pinion Bearing (.070)	A/R
*	46−2415	Shim−Front Pinion Bearing (.072)	A/R
*	46−2416	Shim−Front Pinion Bearing (.074)	A/R
*	46−2420	Shim−Front Pinion Bearing (.076)	A/R
*	46−2421	Shim−Front Pinion Bearing (.078)	A/R
*	46−2422	Shim−Front Pinion Bearing (.080)	A/R
*	46−2423	Shim−Front Pinion Bearing (.082)	A/R
*	46−2424	Shim−Front Pinion Bearing (.084)	A/R
*	46−2425	Shim−Front Pinion Bearing (.086)	A/R
*	46−2426	Shim−Front PInion Bearing (.088)	A/R
23	254−91	Bearing Cone	1
24	254−90	Bearing Cup	1

Ref. No.	Part No.	Description	No. Used
25	21−8020	Spacer−Pinion Bearing	1
26	86−9580	Upper Housing (Incl. Ref. #11)	1
27	254−66	Cup−Tapered Bearing	2
28	254−65	Cone−Tapered Bearing	2
29		Ring Gear	1
30	32121−15	Roll Pin	1
31	21−7700	Pinion Mate Shaft	1
32	21−7770	Drive Gear Screw	5
33	21−7670	Differential Case	1
34	43−6840	Lower Housing	1
35	21−8120	Adjustment Shim .030	A/R
36	21−8110	Adjustment Shim .010	A/R
37	21−8100	Adjustment Shim .005	A/R
38	21−8090	Adjustment Shim .003	A/R
39	72−9420	Vent Tube Assembly	1
*	92−4903	Asm−Upper Hsg., 2WD (Incl. Ref.#4−33 & 35−38)	1
*	92−4848	Asm−Gear & Pinion (Incl. Ref. #8 & 29)	1
42	3217−9	Nut	2
43	3256−5	Washer−Flat	2
44	24−9830	Support−Axle	1
45	3253−21	Washer−Lock	1
46	323−6	Screw−HH	1

*Not Illustrated

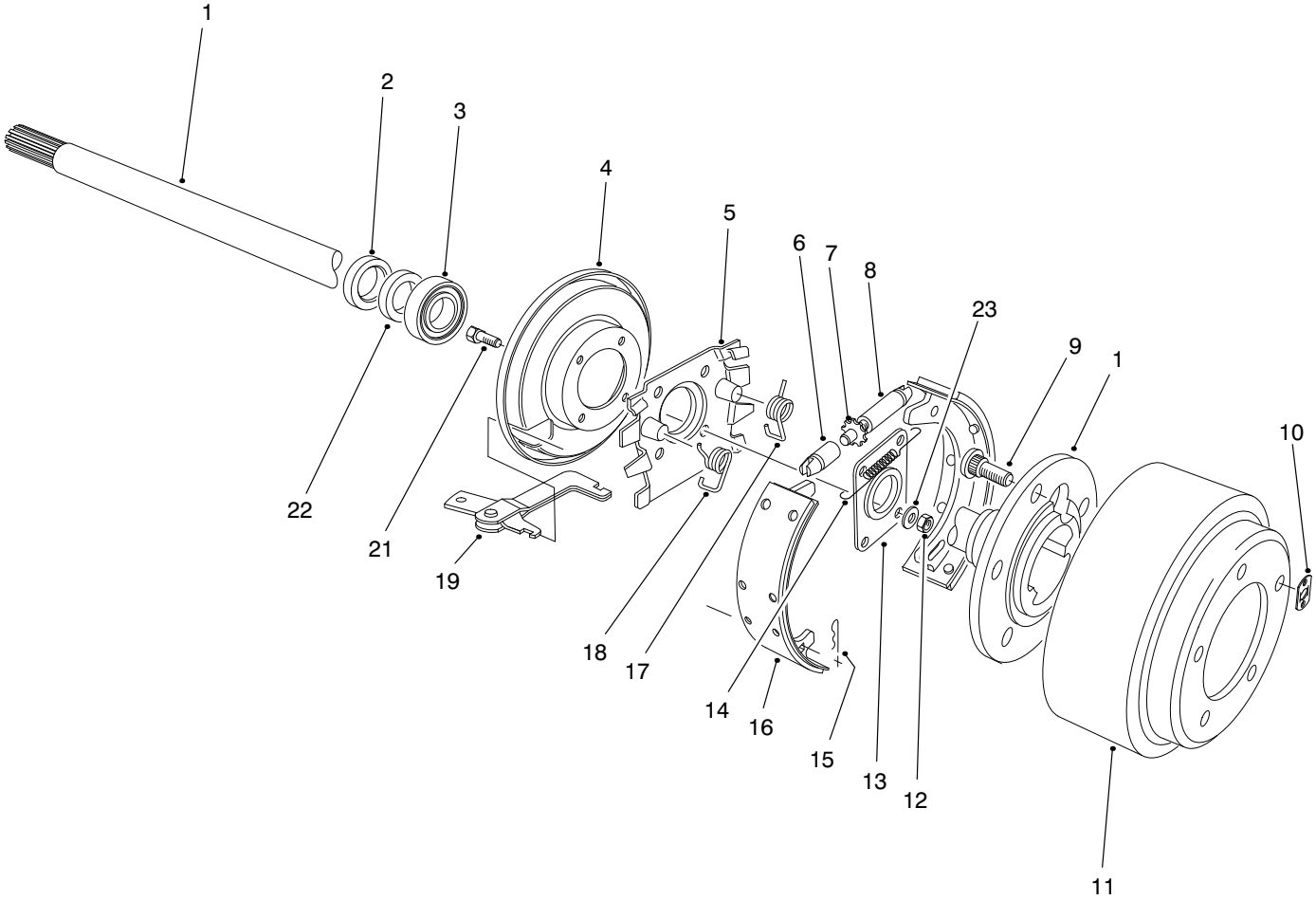

T−2664−1

BRAKE ASSEMBLY

Ref. No.	Part No.	Description	No. Used
1	28−0650	Flanged Axle Shaft	2
2	92−1774	Oil Seal	2
3	21−8180	Bearing	2
4	21−9450	Dust Shield	2
5	43−6810	Torque−Spider	2
6	21−9390	Socket−Adjusting Screw	2
7	21−9370	Screw−Adjusting	2
8	21−9380	Nut−Pivot	2
9	242−34	Axle Flange Stud	10
10	21−8360	Clip−Retaining	2
11	28−0680	Brake Drum	2
12	94−6935	Nut−Lock	8

Ref. No.	Part No.	Description	No. Used
13	28−0670	Oil Seal	2
14	21−9440	Spring−Adjusting Screw	2
15	21−9460	Retainer−Brake Lever	4
16	84−8600	Asm−Shoe & Lining (Set of 4)	1
17	21−9420	Spring−Shoe Return L.H.	2
18	21−9430	Spring−Shoe Return R.H.	2
19	24−9180	Strut & Lever Parking Brake	2
21	94−6934	Screw−Socket Hd.	8
22	24−8840	Ring−Wheel Bearing	2
23	94−6936	Washer	8
*	92−8775	Gasket Kit−Liquid	2

*Not Illustrated

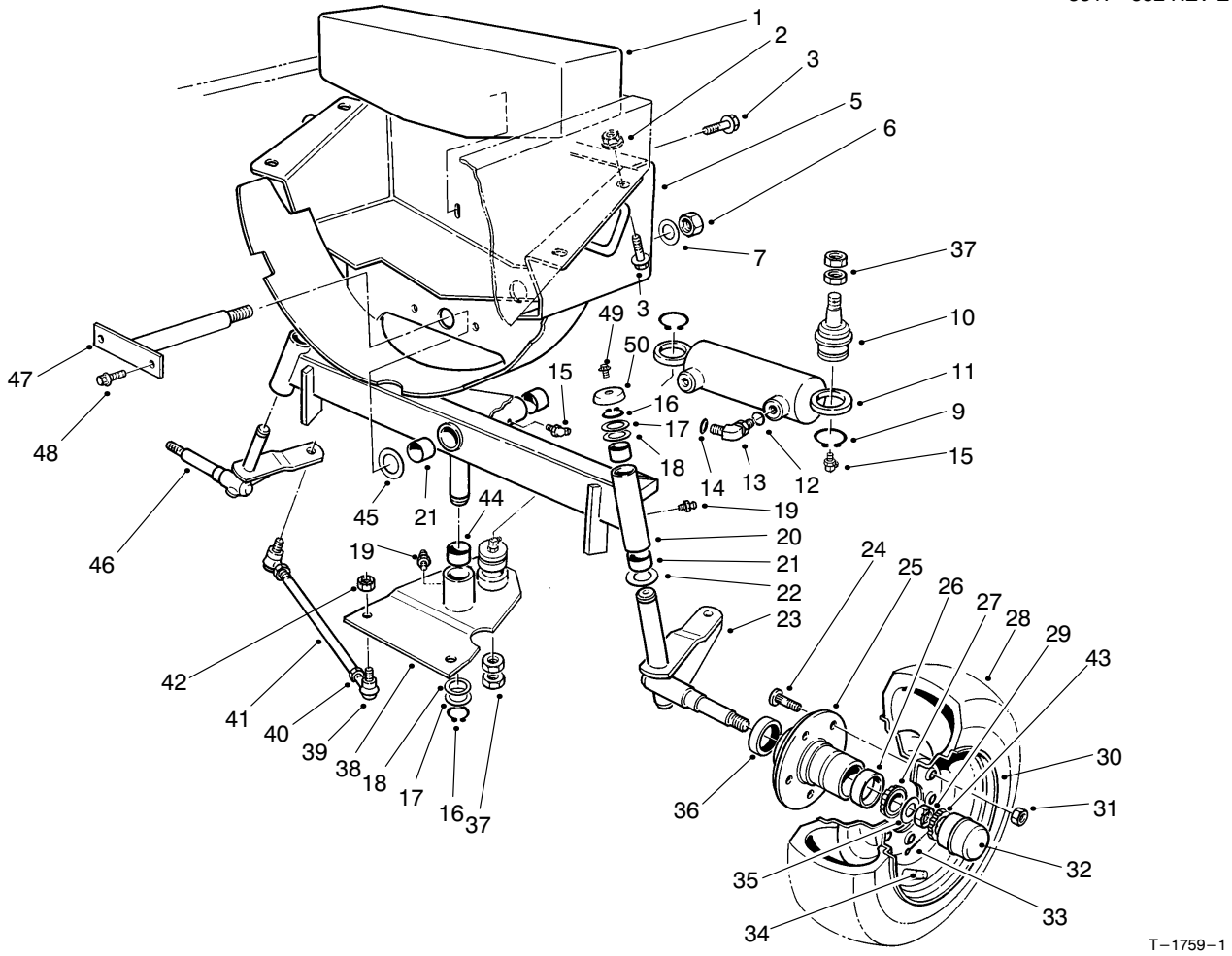

REAR WHEEL & AXLE ASSEMBLY

Ref. No.	Part No.	Description	No. Used
1	67−8960	Weight−Axle Rear	1
2	32128−23	Nut−Lock, Flange	4
3	3234−32	Screw−HHF	6
5	92−7841	Support−Axle Rear	1
6	32146−20	Nut−Lock	1
7	71−4540	Washer−Thrust	1
9	32151−104	Ring−Retaining	2
10	92−5838	Ball Joint	2
11	92−7828	Cylinder−Hydraulic	1
12	237−78	O−Ring	1
13	340−54	Fitting−45°	1
14	237−22	O−Ring	1
15	302−11	Fitting	3
16	32151−36	Ring−Retaining	3
17	5−1226	Washer	A/R
18	10−8110	Washer	3
19	302−5	Fitting	3
20	92−7816	Axle−Rear (Inc. Ref. #21)	1
21	67−1750	Bushing−Axle	6
22	256−121	Bushing−Thrust	2
23	93−3198	Asm−Spindle L.H.	1
24	10−6830	Stud−Drive	10
25	21−2820	Hub−Wheel (Incl. Ref. #24 & 26)	2
26	254−72	Cup−Bearing	4
27	254−94	Cone−Bearing	4
28	231−105	Tire	2

Ref. No.	Part No.	Description	No. Used
29	3220−7	Nut−Jam	2
30	217−106	Wheel	2
31	242−50	Nut−Wheel	10
32	241−119	Cap−Dust	2
33	3272−13	Pin−Cotter	2
34	232−31	Stem−Valve w/Cap	2
35	93−0309	Washer−Tab	2
36	253−129	Closure	2
37	3220−6	Nut−Jam	4
38	92−7821	Pivot−Steering (Incl. Ref. #44)	1
39	21−0140	Asm−Socket R.H. (Inc. Ref. #42)	2
*	21−0150	Asm−Socket L.H. (Inc. Ref. #42)	2
40	3220−5	Nut−Jam R.H. Thread	2
*	3220−12	Nut−Jam L.H. Thread	2
41	21−2000	Rod−Tie	2
42	3220−3	Nut−Jam	8
43	93−0307	Retainer−Nut, Lock	2
44	256−242	Bushing	2
45	56−2460	Washer	A/R
46	93−3199	Asm−Spindle R.H.	1
47	92−7843	Pin−Axle Rear	1
48	32144−14	Screw−TAP	2
49	3234−13	Screw	2
50	66−2990	Cup−Spindle	2

*Not Illustrated

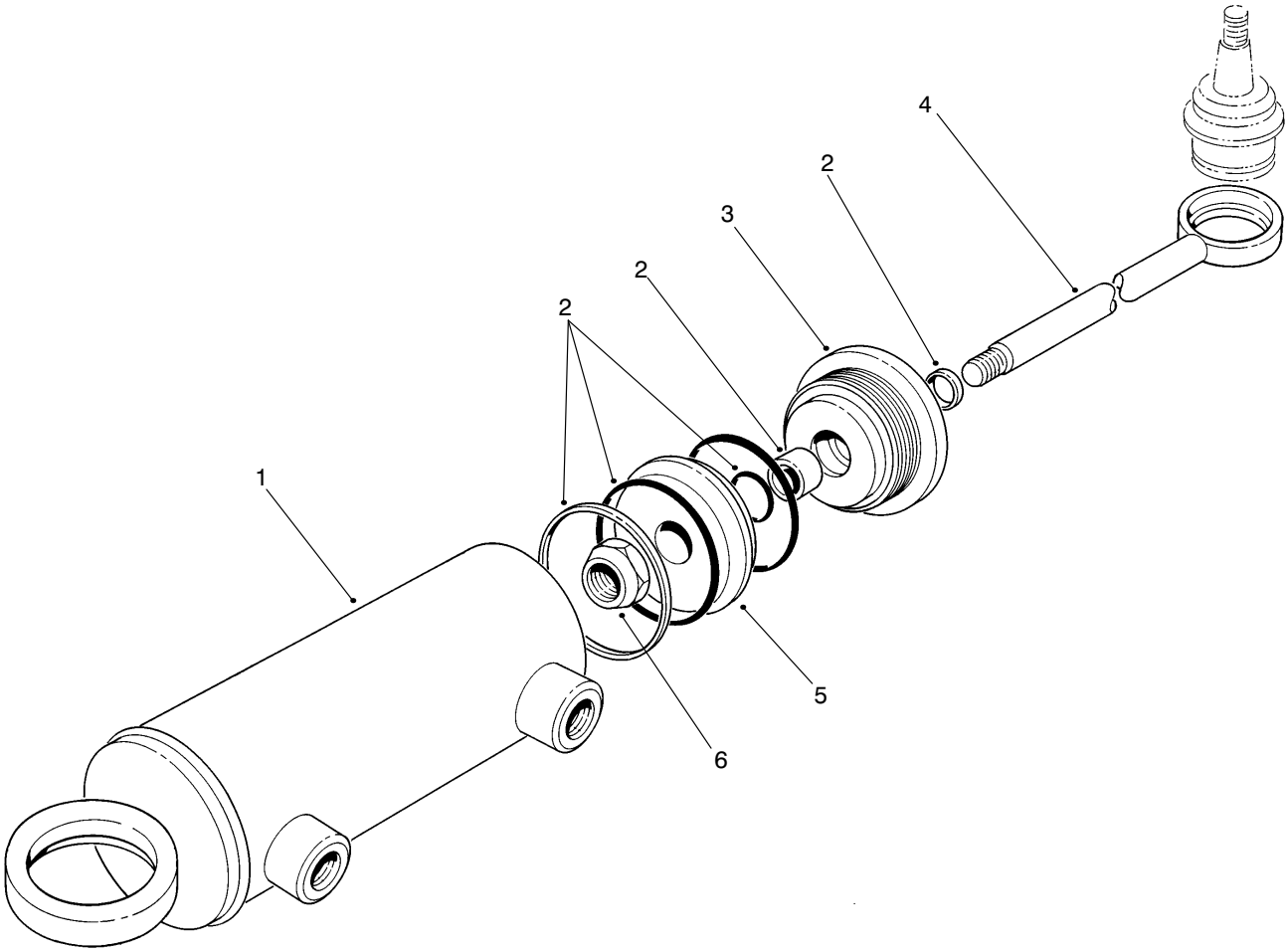

T−1761−2

HYDRAULIC STEERING CYLINDER NO. 92−7828

Ref. No.	Part No.	Description	No. Used
1		Asm−Tube	1
2	92−6593	Seal Kit	1
3	92−6588	Gland	1
4		Asm−Piston Rod	1

Ref. No.	Part No.	Description	No. Used
5	66−1940	Piston	1
6	66−1930	Nut−Lock	1
*	92−7828	Cylinder−Hydraulic (Incl. Ref. #1−6)	1

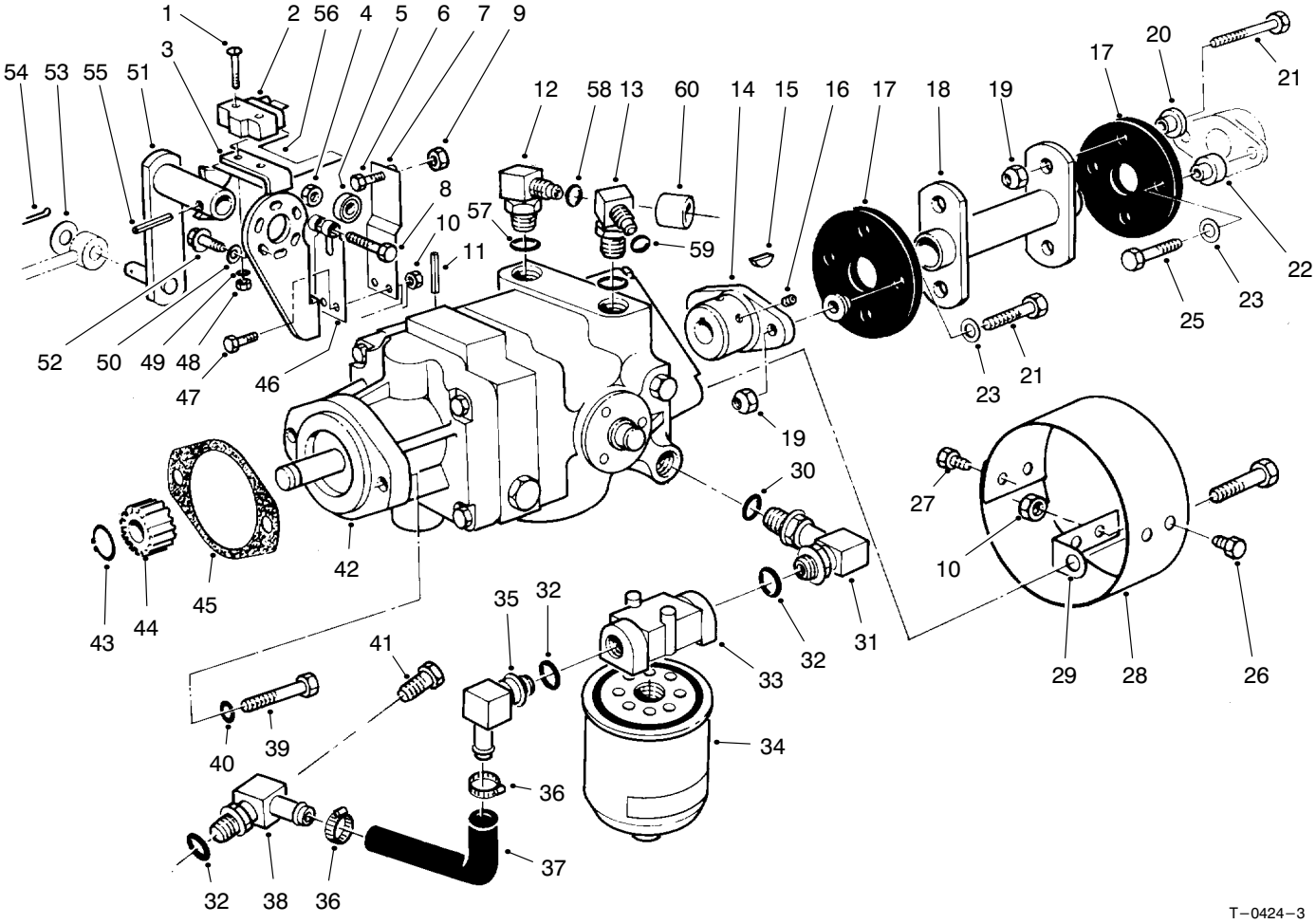

HYDROSTATIC TRANSMISSION ASSEMBLY

Ref. No.	Part No.	Description	No. Used
1	3249−11	Screw−Round Hd. Mach.	2
2	29−6163	Micro Switch	1
3	29−6120	Pump Plate	1
4	3296−29	Nut−Lock	1
5	251−259	Ball Bearing	1
6	3210−7	Screw−HH	1
7	29−6170	Extended Leaf Spring	1
8	322−17	Screw−HH	1
9	3219−2	Nut−Hex	1
10	3296−42	Nut−Lock	6
11	32121−6	Roll Pin	1
12	340−77	Elbow	1
13	340−99	Elbow	1
14	33−4380	Pump Hub	1
15	3257−32	Woodruff Key	1
16	3241−5	Square Hd. Set Screw	2
17	44−2230	Rubber Coupling	2
18	46−6390	Drive Coupling	1
19	32152−1	Nut−Lock	8
20	27−6600	Spacer Rubber Coupling	6
21	322−6	Screw−HH	6
22	27−6590	Spacer Rubber Coupling	2
23	3256−3	Washer−Flat	4
25	322−8	Screw−HH	2
26	321−2	Screw−HH	2
27	321−4	Screw−HH	2

Ref. No.	Part No.	Description	No. Used
28	54−9300	Cover	1
29	54−9290	Bracket	2
30	237−80	O−Ring	1
31	68−8660	Elbow	1
32	237−81	O−Ring	3
33	68−8990	Head−Filter	1
34	23−9740	Oil Filter	1
35	353−987	Elbow	1
36	2412−34	Clamp−Hose	2
37	68−9650	Hose−Axle	1
38	70−2620	Elbow−90°	1
39	323−7	Screw−HH	2
40	3253−21	Washer−Lock	2
41	353−508	Plug−Drain	1
42	92−8947	Transmission−Inline	1
43	32120−72	Ring−Retaining External	1
44	86−7220	Gear−Transmission Output	1
45	41−8760	Gasket−Transmission	1
46	29−6150	Leaf Spring	1
47	321−6	Screw−HH	2
48	3217−16	Nut	2
49	3254−9	Washer−Lock	2
50	3255−7	Washer−Lock	3
51	28−9570	Pump Lever	1
52	11−9760	Screw−TAP	3
53	3256−6	Washer−Flat	1

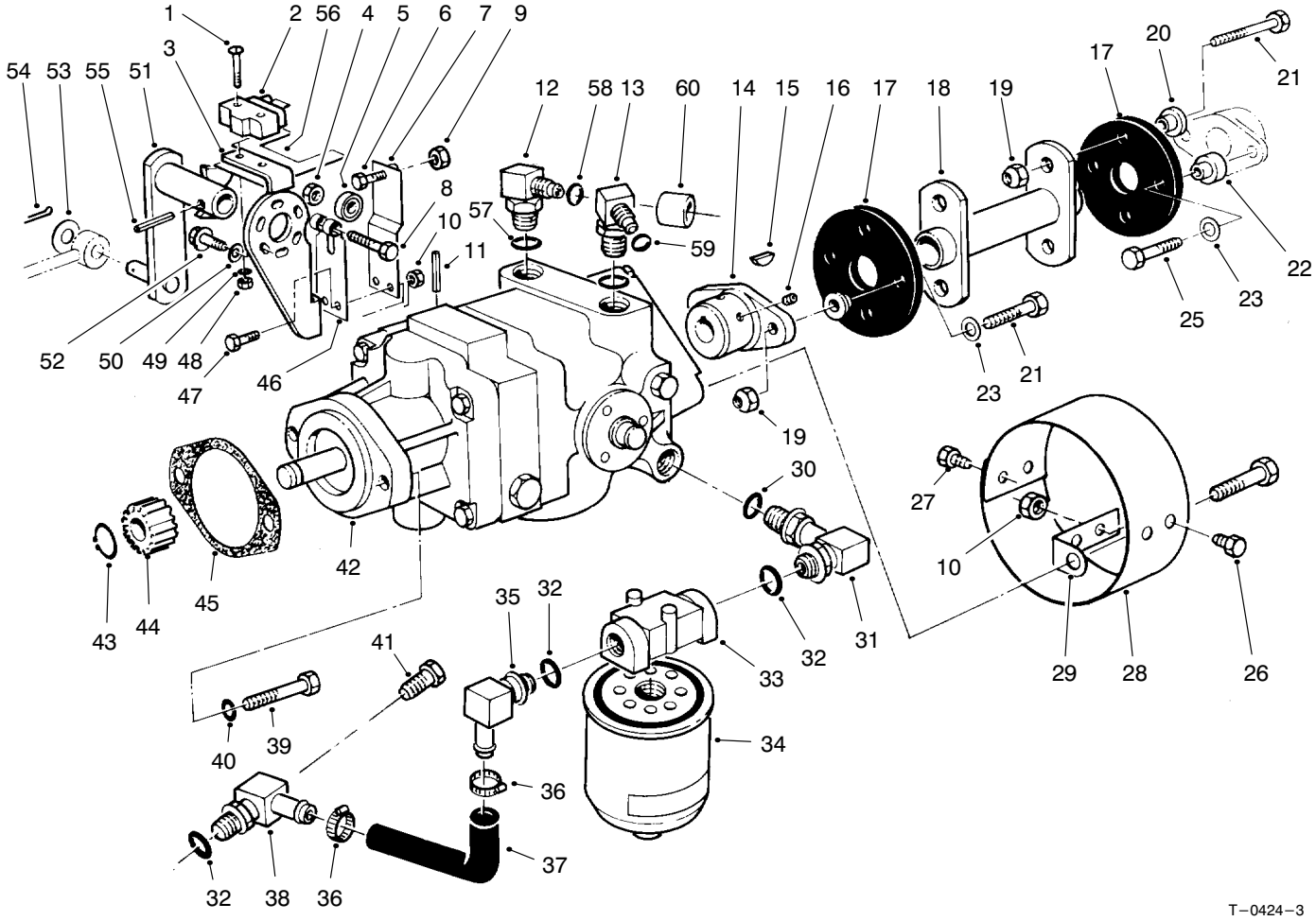

HYDROSTATIC TRANSMISSION ASSEMBLY (Continued)

Ref. No.	Part No.	Description	No. Used
54	3272−10	Cotter Pin	1
55	32121−24	Roll Pin	1
56	46−8810	Stop−Leaf Spring	1
57	237−42	O−Ring	2
58	237−22	O−Ring	1

Ref. No.	Part No.	Description	No. Used
59	237−30	O−Ring	1
60	38−3400	Guard−Rubber	1
*	95−3093	Kit−400 Hour Filter (Incl. Ref. #34)	1

* Not Illustrated

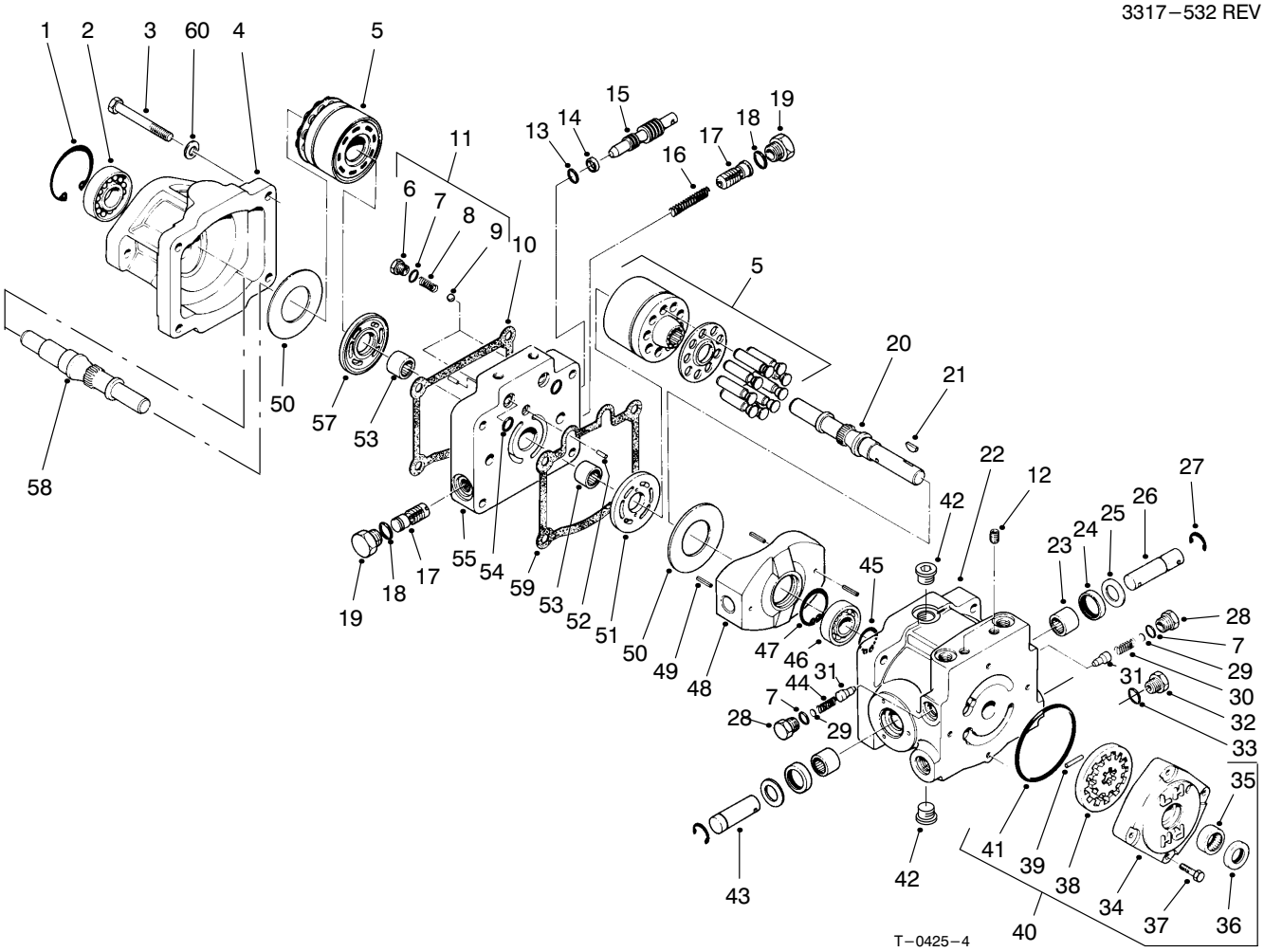

TRANSMISSION ASSEMBLY NO. 92−8947

Ref. No.	Part No.	Description	No. Used
1	32120−8	Retaining Ring	1
2	72−3750	Roller Bearing	1
3	323−56	Screw−HH	4
4	67−9080	Motor Housing	1
5	48−1800	Kit−Cylinder Block	2
6	25−2650	Check Valve Plug	2
7	237−86	O−Ring	4
8	25−2640	Valve Spring	2
9	25−2490	Ball	2
10	67−9100	Gasket	1
12	285−17	Pipe Plug	2
13	237−22	O−Ring	1
14	25−2630	Back Up Ring	1
15	88−8220	By Pass Valve	1
16	25−2610	Accel. Valve Spring	1
17	25−2410	Asm−Accel. Valve	2
18	76−1900	O−Ring	2
19	353−550	Plug−Hex. Hd.	2
20	67−8020	Pump Shaft	1
21	3257−32	Woodruff Key	1
22	54−7890	Pump Housing (Incl. Ref. #12 & 23−25)	1
23	252−82	Needle Bearing	2
24	25−3210	Lip Seal	2
25	25−2510	Washer−Flat	2
26	25−2580	Trunnion Shaft	1

Ref. No.	Part No.	Description	No. Used
27	32151−46	Retaining Ring	2
28	25−2460	Plug−HH	2
29	25−2470	Shim Pack	2
30	25−2570	Valve Spring	1
31	83−7260	Relief Valve Cone	2
32	353−551	Plug−HH	1
33	237−80	O−Ring	1
34	25−2550	Charge Pump Housing	1
35	67−8050	Needle Bearing	1
36	93−4133	Lip Seal	1
37	322−4	Screw−HH	4
38	25−2680	Asm−Gerotor	1
39	25−2530	Headless Straight Pin	1
40	25−3190	Charge Pump (Incl. Ref. #34−39 & 41)	1
41	237−95	O−Ring	1
42	67−9090	Plug	2
43	25−2500	Trunnion Shaft	1
44	25−2480	Valve Spring	1
45	32120−15	Retaining Ring	1
46	251−8	Ball Bearing	1
47	32120−11	Retaining Ring	1
48	25−2450	Variable Swashplate	1
49	32121−91	Coil Spring Pin	3
50	25−2380	Thrust Plate	2
51	25−2440	Pump Valve Plate	1

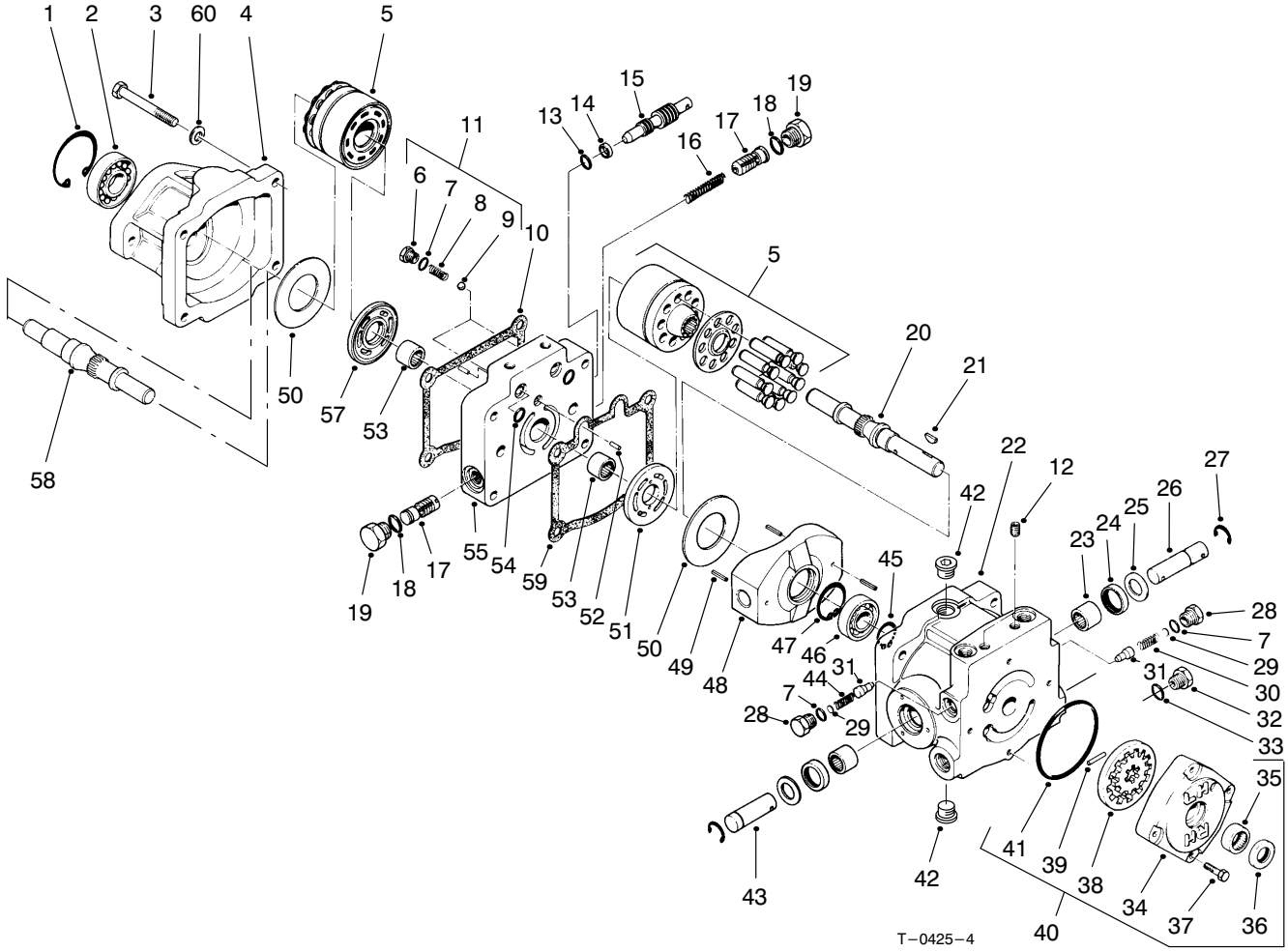

TRANSMISSION ASSEMBLY NO. 92−8947 (Continued)

Ref. No.	Part No.	Description	No. Used
52	25−2430	Dowel Pin	2
53	46−8400	Needle Bearing	2
54	93−4132	O−Ring	2
55	92−8918	Center Section	1
57	25−2390	Motor Valve Plate	1
58	46−8410	Motor Shaft	1
59	25−2400	Gasket	1

Ref. No.	Part No.	Description	No. Used
60	93−0312	Washer	4
61	92−8776	Plug (Incl. Ref. #62)	4
62	92−8777	O−Ring	2
63	49−8520	Kit−Relief, Implement (Incl. Ref. #7 & 28−31)	1

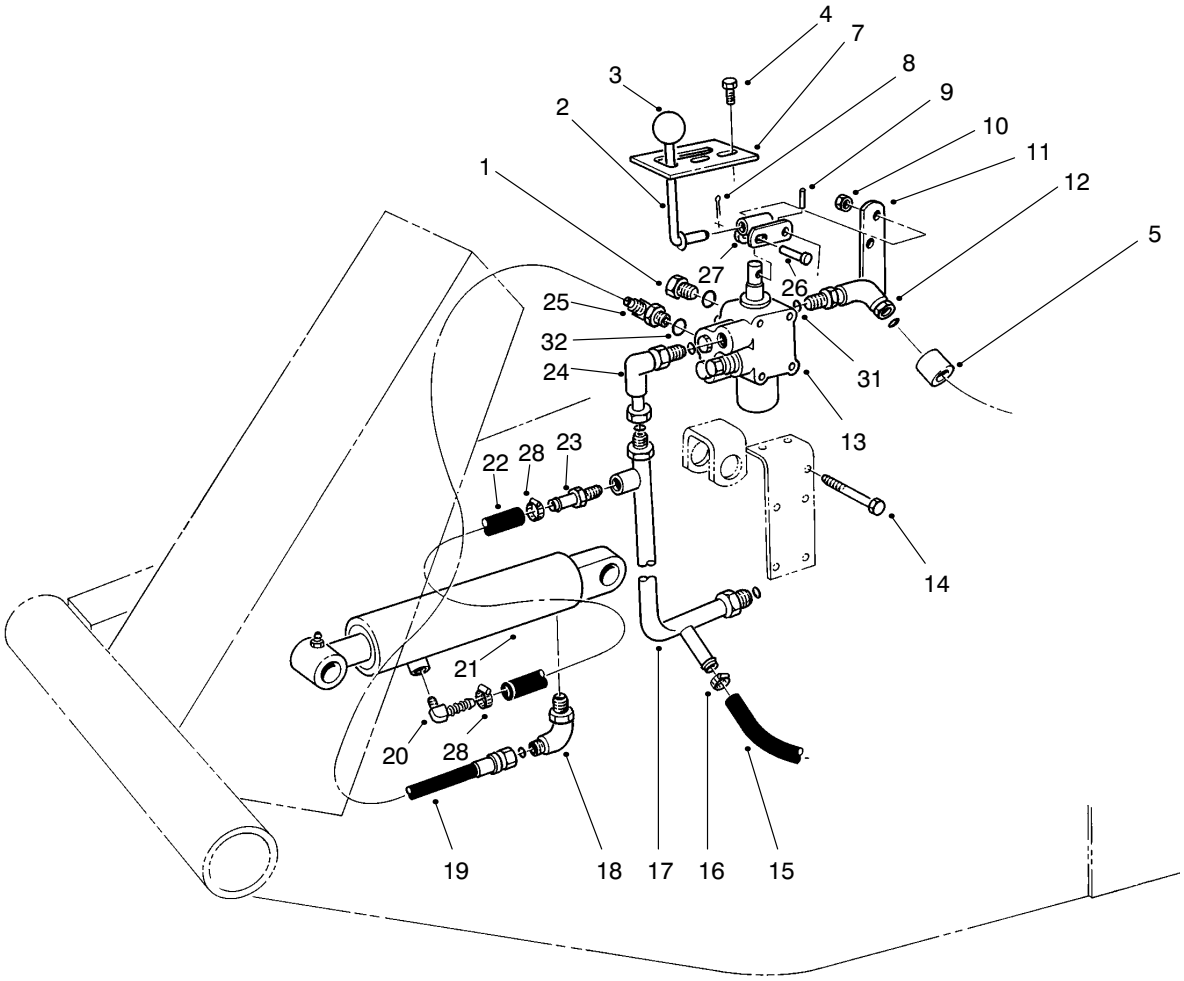

T−0426−5

VALVE & CYLINDER ASSEMBLY

Ref. No.	Part No.	Description	No. Used
1	353−512	Plug	1
2	21−8620	Lever Valve	1
3	233−21	Knob	1
4	32144−10	Screw−TAP	2
5	38−3400	Guard−Rubber	1
7	21−8640	Latch Valve Lever	1
8	3272−6	Cotter Pin	1
9	32121−73	Pin Slotted Spring	1
10	3296−42	Nut−Lock	5
11	21−9010	Pivot Mount−Valve Lever	1
12	340−99	Fitting−90˚ Elbow	1
13	43−1710	Asm−Valve	1
14	321−23	Screw−HH	5
15	63−8990	Hose	1
16	2412−36	Clamp−Hose	1
17	63−9260	Manifold−Valve	1

Ref. No.	Part No.	Description	No. Used
18	340−112	Elbow 90˚	1
19	92−7833	Hose−Valve to Cylinder	1
20	304−75	Fitting−90˚ Barb	1
21	62−4250	Cylinder−Hydraulic	1
*	66−1250	Cylinder−Hydraulic (Optional)	1
22	92−7834	Hose	1
23	304−73	Fitting−Straight Barb	1
24	340−110	Elbow−90˚	1
25	340−97	Fitting−90˚	1
26	283−17	Pin	1
27	21−8590	Link −Valve Lever	1
28	2412−108	Clamp Hose	2
31	237−42	O−Ring	2
32	237−78	O−Ring	2

*Not Illustrated

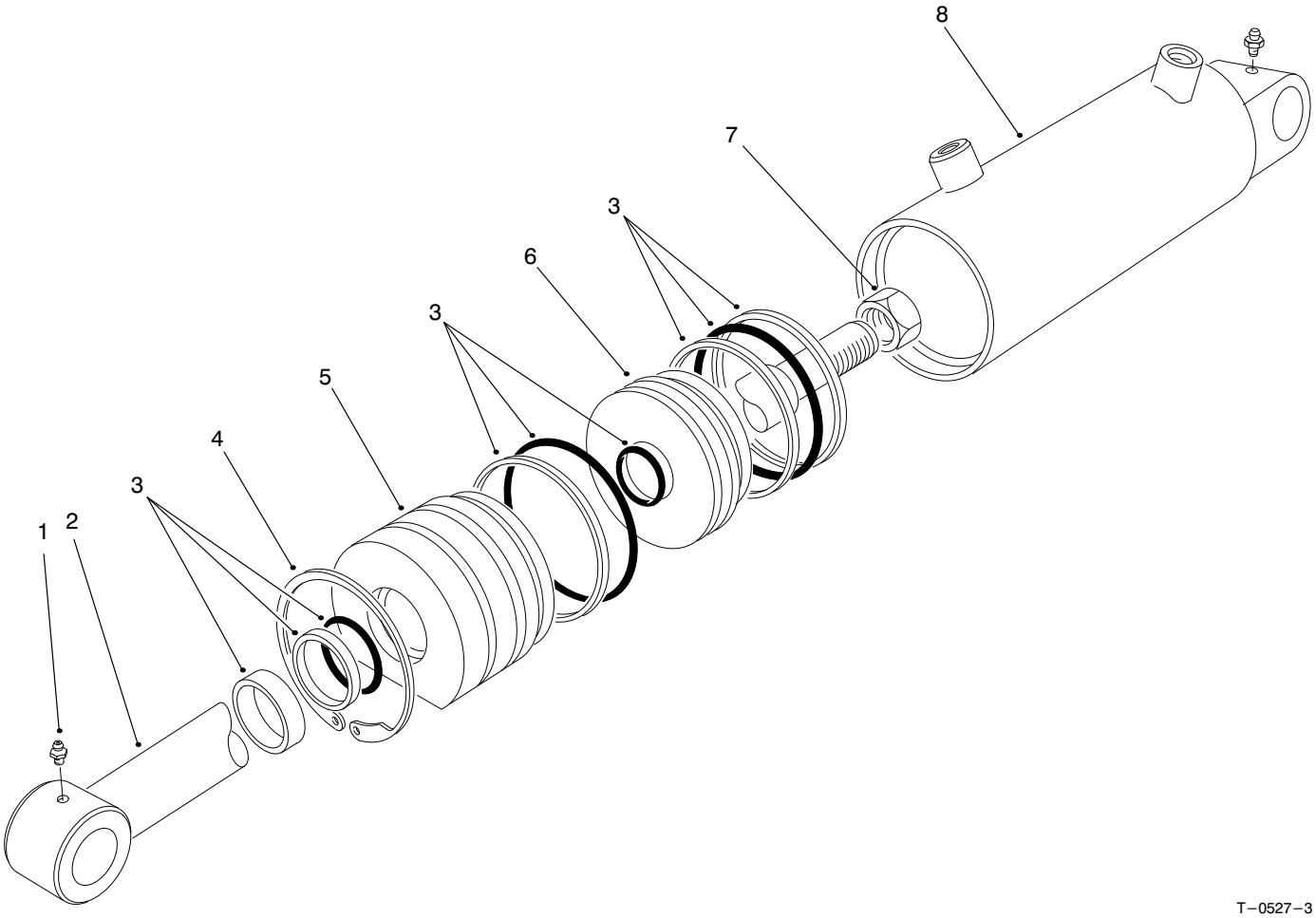

HYDRAULIC LIFT CYLINDER ASSEMBLY NO. 62−4250 (2−1/2” Bore)

Ref. No.	Part No.	Description	No. Used
1	302−55	Fitting−Grease	2
2	61−4980	Shaft−w/Clevis	1
3	61−4960	Repair Kit	1
4	61−4990	Ring−Retaining	1

Ref. No.	Part No.	Description	No. Used
5	60−9780	Head	1
6	60−9770	Piston	1
7	60−9760	Nut	1
*8		Barrel	1

*Not available separately.

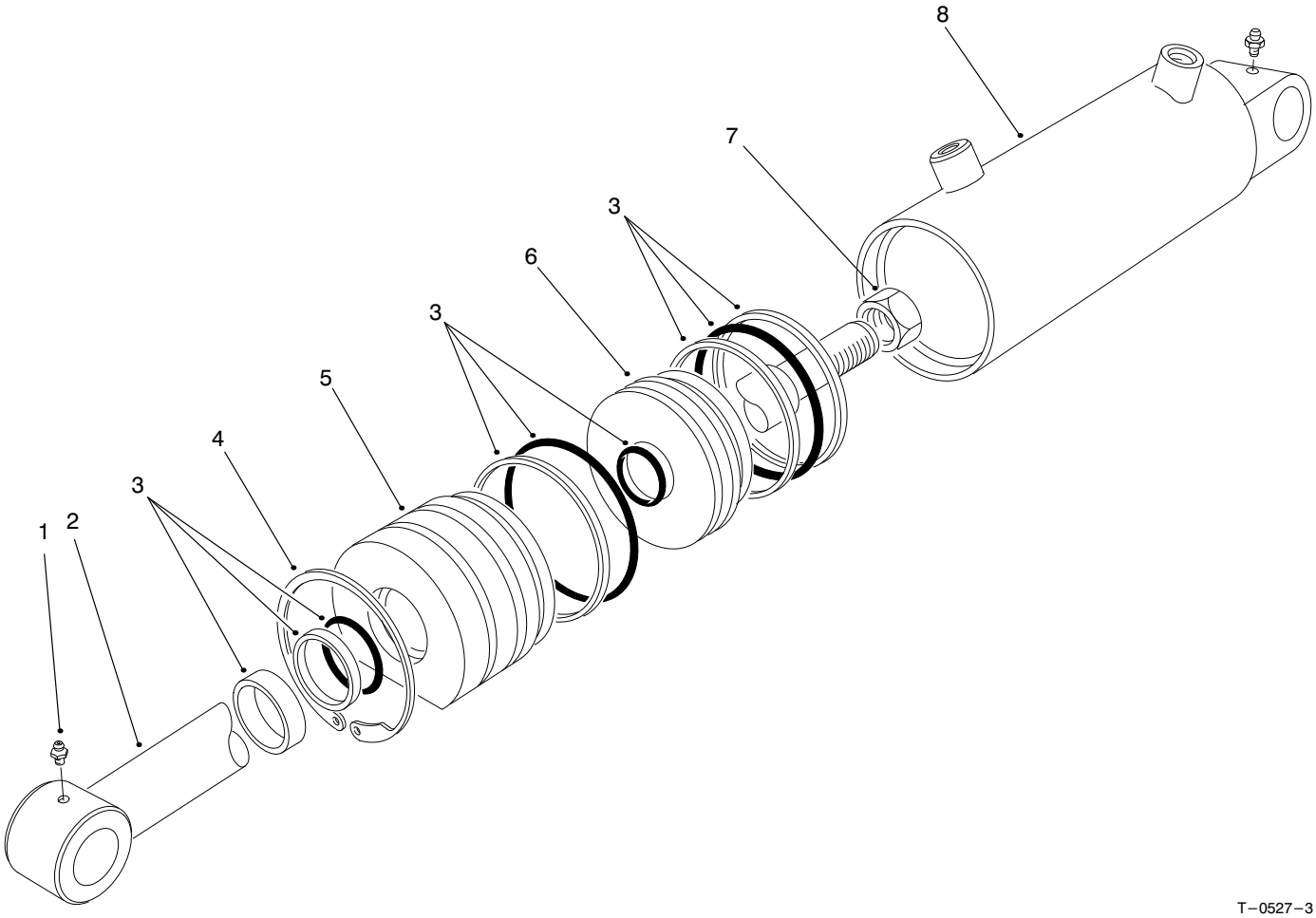

T−0527−3

HYDRAULIC LIFT CYLINDER ASSEMBLY NO. 66−1250 (3” Bore)

Ref. No.	Part No.	Description	No. Used
1	302−55	Grease Fitting	2
2	67−5480	Shaft	1
3	67−5500	Repair Kit	1
4	67−5470	Ring−Retaining	1
5	67−5460	Head	1
6	67−5450	Piston	1
7	60−9760	Nut−Hex	1
*8		Barrel	1

*Not available separately.

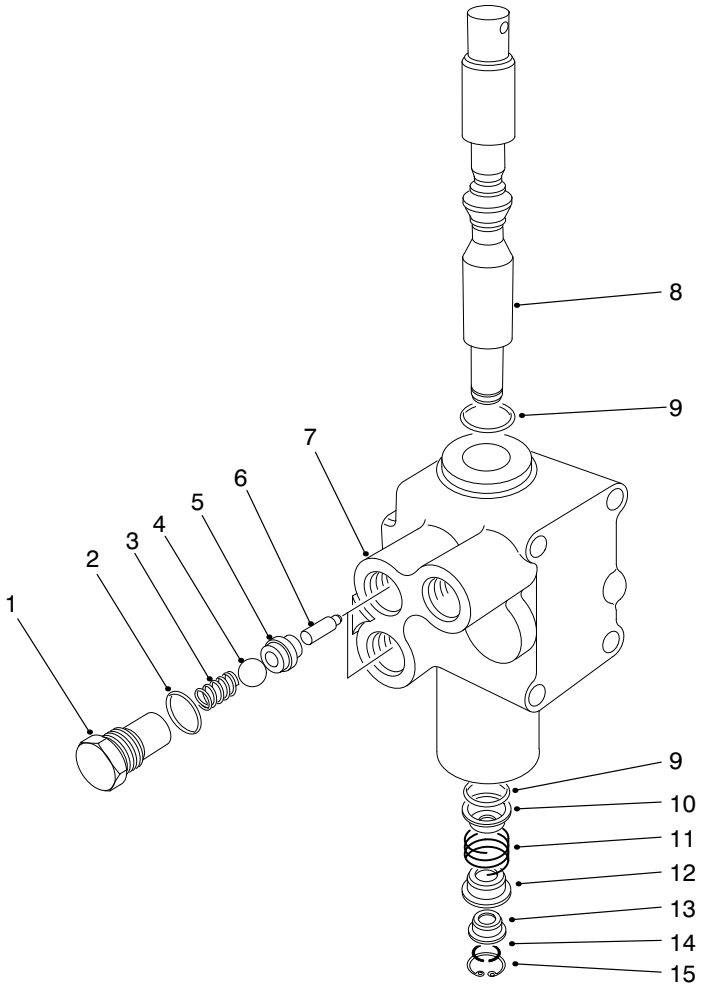

CONTROL VALVE ASSEMBLY NO. 43−1710

Ref. No.	Part No.	Description	No. Used
1	22−8330	Plug	2
2	237−42	O−Ring	2
3	22−8340	Spring	2
4	22−8350	Ball	2
5	22−8370	Seat−Check Valve	2
6	22−8360	Pin−Cam	2
7	43−1730	Body	1
8	22−8420	Spool	1

Ref. No.	Part No.	Description	No. Used
9	22−8500	O−Ring	2
10	22−8380	Spring Retainer	1
11	22−8410	Spring	1
12	22−8390	Spring Retainer	1
13	22−8400	Spacer Float	1
14	22−8480	Spring Ring Spool	1
15	22−8490	Snap Ring	1

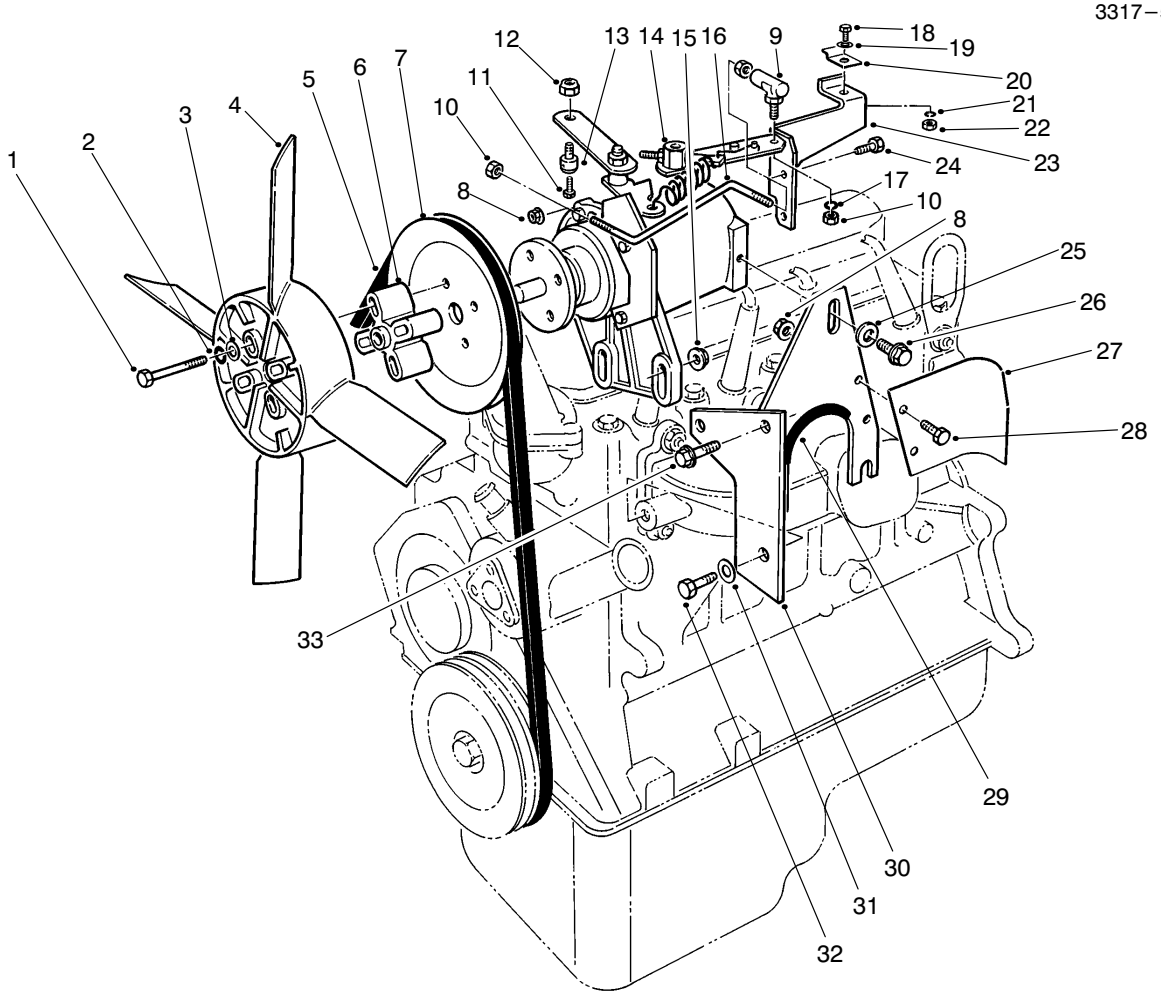

ENGINE ASSEMBLY

Ref. No.	Part No.	Description	No. Used
1	322−12	Screw−HH	4
2	3253−4	Washer−Lock	4
3	3256−2	Washer−Flat	4
†4	E7JL−8600−AA	Fan	1
5	67−8510	Belt−Fan	1
6	67−8390	Spacer−Fan	1
7	67−8380	Pulley−Fan	1
8	32128−33	Nut−HHF	4
9	21−5640	Joint−Ball	1
10	3219−14	Nut−Hex	3
11	25−8640	Screw−Machine	1
12	3296−20	Nut−Lock	1
13	43−3780	Swivel−Cable Throttle	1
14	67−8360	Governor	1
15	3290−357	Nut−Lock, Flange	2
16	67−8250	Rod−Throttle	1
17	3253−12	Washer−Lock	1

Ref. No.	Part No.	Description	No. Used
18	321−4	Screw−HH	1
19	3256−22	Washer−Flat	1
20	2412−31	Clamp−Cable	1
21	3253−3	Washer−Lock	1
22	3217−5	Nut	1
23	67−8240	Bracket−Throttle	1
24	321−6	Screw−HH	2
25	3256−56	Washer−Flat	1
26	3234−5	Screw−HHF	1
27	67−8920	Shield−Heat	1
28	321−39	Screw−HH	2
29	70−2040	Guard−Trim	1
30	67−9150	Support−Governor	1
31	48−8030	Washer−Flat	1
32	66−3160	Screw−HH	1
33	3234−11	Screw−HHF	2

*Not Illustrated
†Obtain from your local Ford Power Products Dealer.

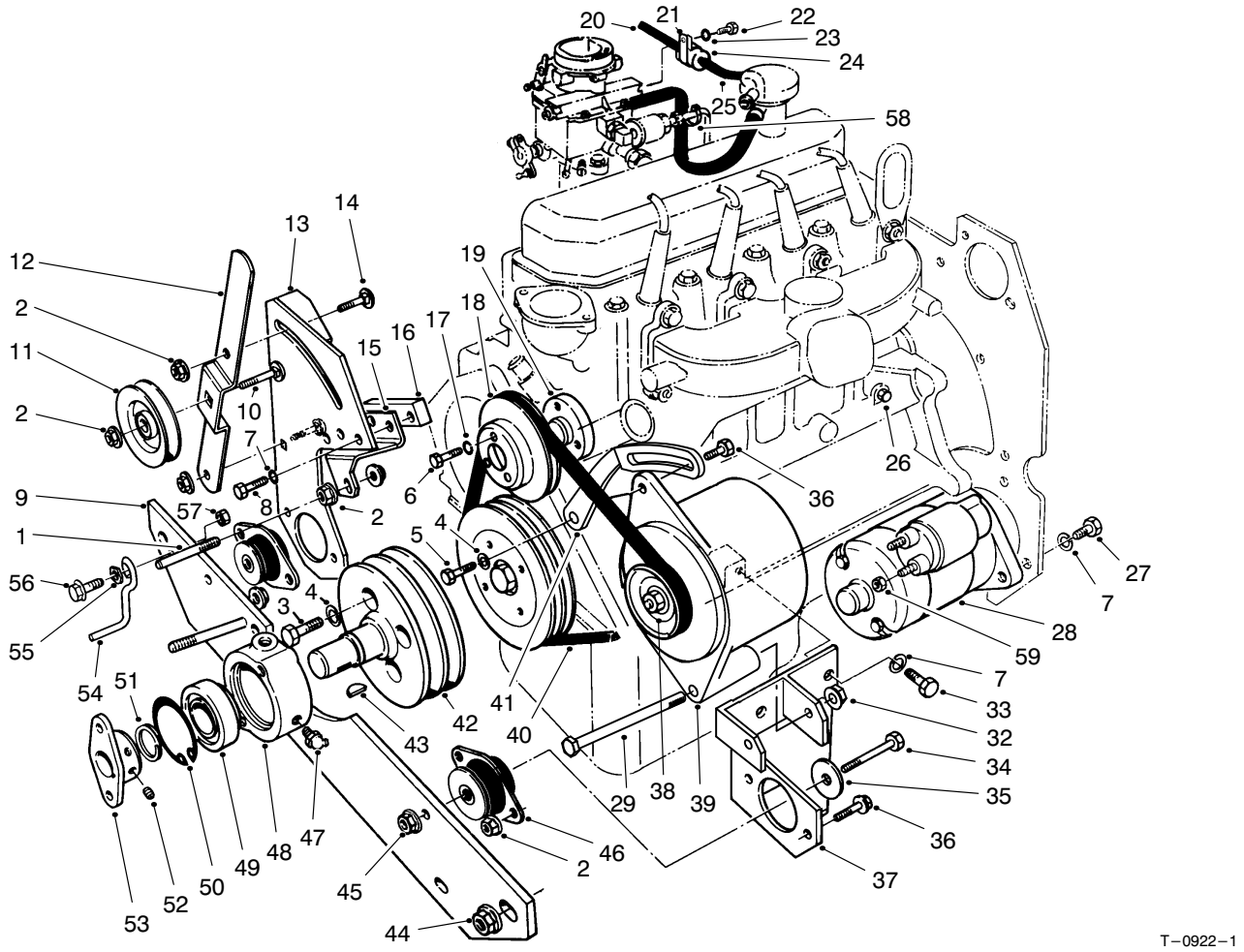

ENGINE ASSEMBLY

Ref. No.	Part No.	Description	No. Used
1	21–1820	Stud–Retainer Belt	3
2	3290–357	Nut–Lock, Flange	12
3	42–9500	Screw–Metric	4
4	42–9850	Washer–Lock	5
5	48–7730	Screw–Metric	1
6	43–2600	Screw–Metric	3
7	48–9590	Washer–Lock	8
8	48–7800	Screw–Metric	3
9	75–9900	Support–Engine Front	1
10	3231–28	Bolt–Carriage	1
11	63–8140	Pulley–Idler	1
12	67–8890	Arm–Idler	1
13	67–8310	Mount–Engine Front R.H.	1
14	3231–22	Bolt–Carriage	2
15	67–8350	Bracket–Guide Belt	1
16	67–8340	Bar–Spacer	1
17	43–5930	Washer–Lock	3
†18		Pulley–Water Pump	1
19	67–8910	Spacer–Pulley	1
20	70–1920	Hose–Vacuum	1
†21	384007–5	Clamp–Valve	1
22	3250–29	Screw–PH	1
23	3256–21	Washer–Flat	1
†24	D4FZ–9C369–A	Fuel Separator	1

Ref. No.	Part No.	Description	No. Used
25	70–1910	Hose–Vac. Advance	1
†26	353055–S7	Plug–Water Drain	1
27	48–9470	Screw–Metric	3
†28	91AB–11000–JB	Starter	1
29	3212–17	Screw–HH	1
32	32128–48	Nut–Hex Flange	1
33	48–7780	Screw–Metric	2
34	324–11	Screw–HH	2
35	53–9480	Washer–Snubber	2
36	3234–11	Screw–Flange Lock	5
37	93–7663	Mount–Engine Front L.H.	1
38	D3JL–10A352–B	Pulley–Alternator	1
39	EZJL–10346–AA	Alternator	1
40	92–9785	Belt–Alternator	1
41	93–8489	Arm Adjust Alternator	1
42	67–8460	Pulley–Engine	1
43	3257–33	Key–Woodruff	1
44	32128–23	Nut–Lock, Flange	2
45	32128–37	Nut–Lock, Flange	2
46	53–9680	Mount–Engine	2
47	302–10	Fitting–Grease	1
48	43–3720	Collar Bearing	1
49	251–252	Bearing	1
50	32120–22	Ring–Retaining Int.	1

†Obtain from your local Ford Power Products Dealer.

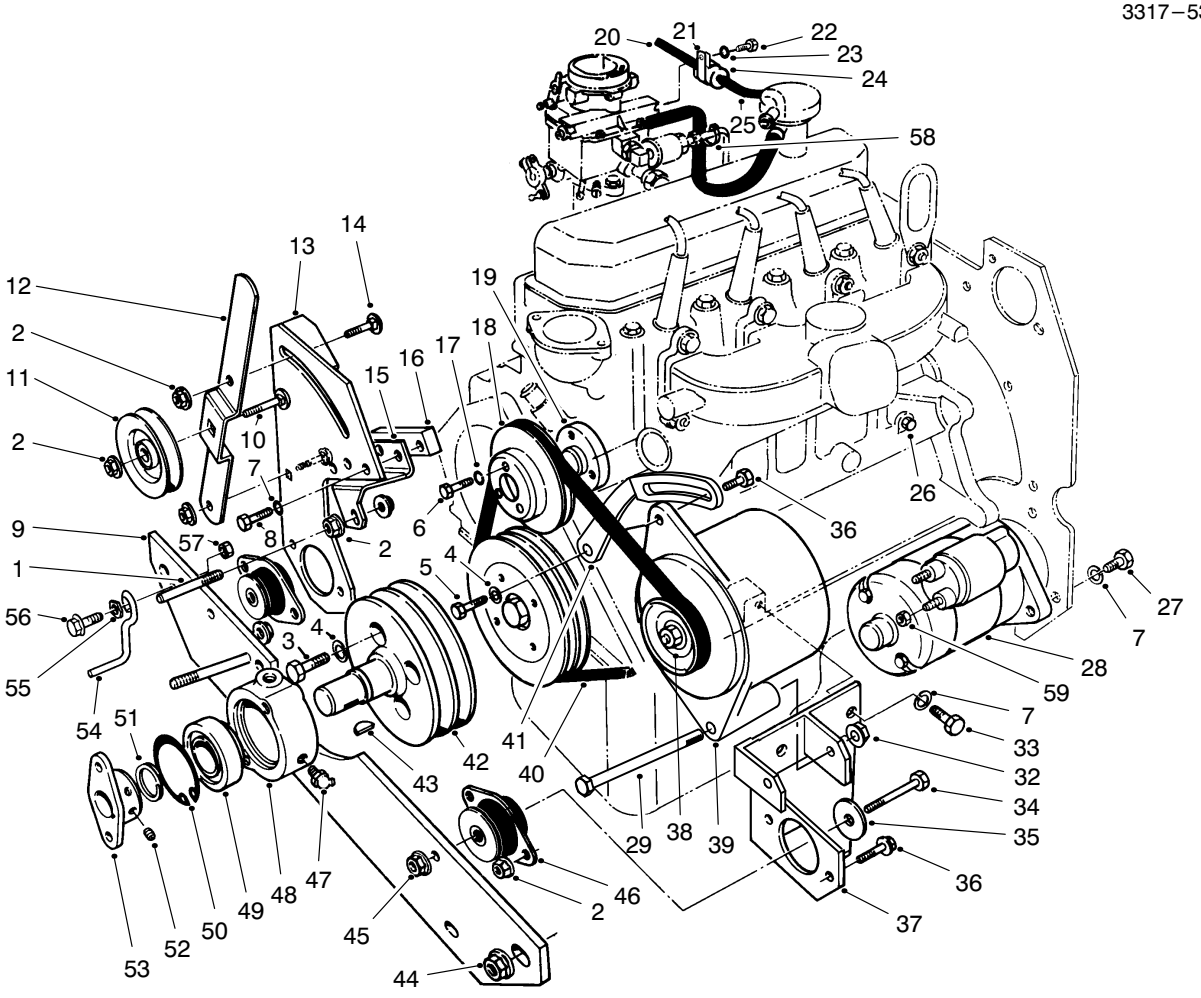

T−0922−1

ENGINE ASSEMBLY

Ref. No.	Part No.	Description	No. Used
51	32120−69	Ring−Retaining Ext.	1
52	3241−5	Screw−Sq. Hd. Set	2
53	27−1960	Hub−Engine	1
54	63−1400	Rod−Belt	1
55	3290−224	Washer−Pyramidal	1

Ref. No.	Part No.	Description	No. Used
56	3234−18	Screw−HHF	1
57	32153−2	Nut−Lock	1
58	3290−379	Cable−Tie	A/R
59	48−7890	Nut	1

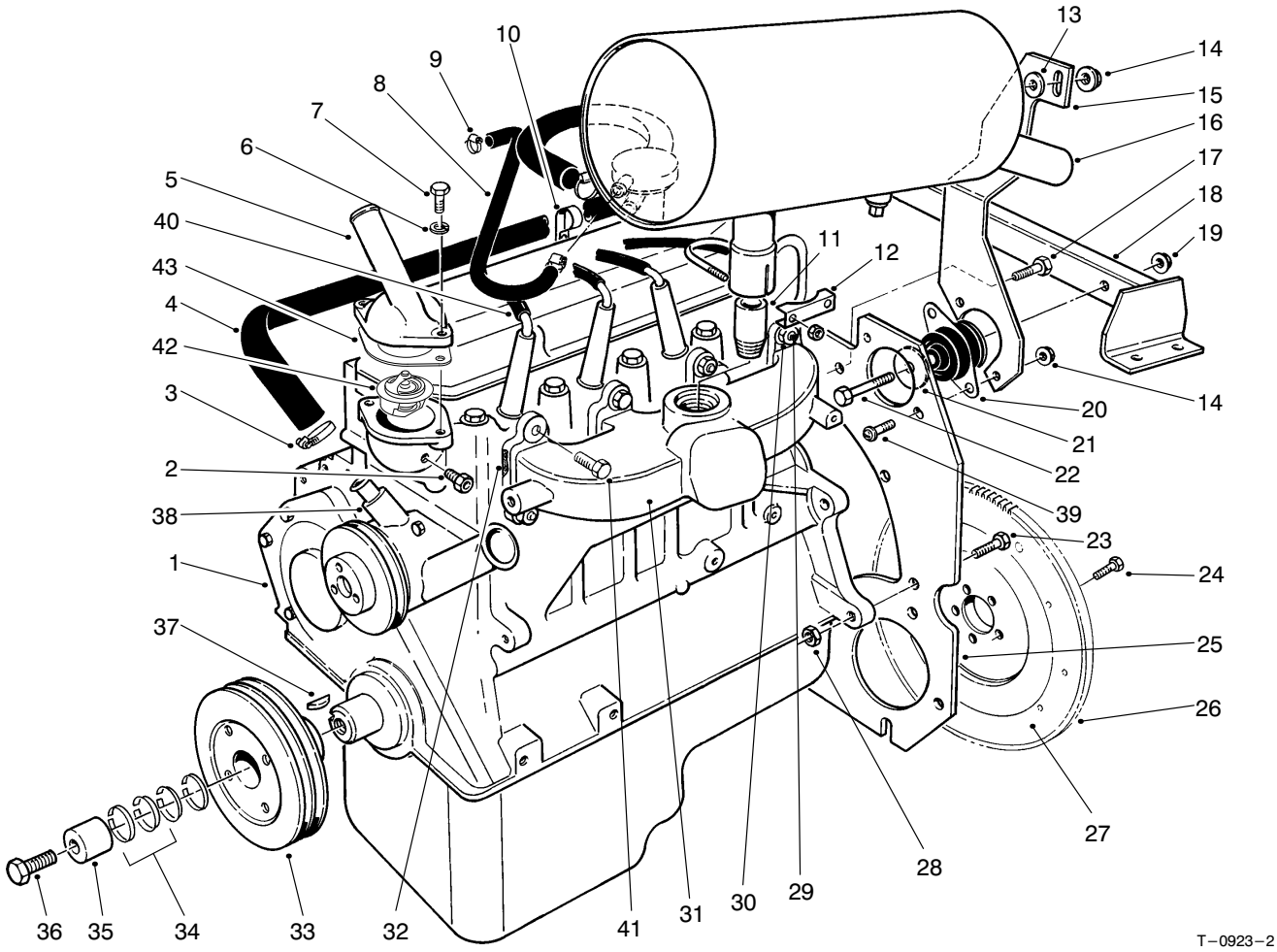

ENGINE ASSEMBLY

Ref. No.	Part No.	Description	No. Used
‡1	Model VSG−411	Engine	
		TYPE 6005A	1
2	70−1690	Adapter−Gauge Temp.	1
3	2412−119	Clamp−Hose	2
4	70−1670	Hose−Heater	1
5	67−8940	Connector−Outlet	1
†6	E630173−S71 M	Washer−Lock	2
†7	E6021 87−S72	Screw−Cap	2
8	70−2050	Hose−Breather	1
9	2412−108	Clamp	2
10	2412−39	Clamp−R	1
11	67−9130	Pipe−Muffler	1
12	2112−6	Clamp−Muffler	1
13	5−0652	Spacer	1
14	3290−357	Nut−Lock, Flange	5
15	67−8420	Bracket−Muffler	1
16	67−9120	Muffler	1
†17	N605799−S2	Bolt	2
18	67−8480	Support−Engine Rear	1
19	32128−37	Nut−Lock, Flange	2
20	53−9680	Mount−Engine	2
21	53−9480	Washer−Snubber	2
22	324−11	Screw−HH	2

Ref. No.	Part No.	Description	No. Used
†23	N80057−S2	Bolt	4
†24	D2RY−6379−A	Bolt	6
25	67−8440	Plate−Support Engine	1
†26	D8RZ−6384A	Ring Gear−Flywheel	1
†27	89BM−6375−AA	Asm−Flywheel	
		(Incl. Ref. #26)	1
†28	N620482−S2	Nut	4
†29	E805697−S76	Stud	6
†30	N620481−S2	Nut	6
†31	EBJL−9430−CA	Manifold−Exhaust	1
†32	89BM−9448−BA	Gasket−Manifold	4
†33	E7JL−6A312−AA	Pulley	1
†34	E7JL−6N300−AA	Locking Ring Set	2
†35	E7JL−6378−AA	Compression Ring	1
†36	E7JL−6K340−AA	Bolt	1
†37	Dory−6B316−A	Key	1
†38	92BX8591−CA	Kit−Water Pump	
		(Incl. Pulley & Gasket)	1
39	3234−11	Screw−HHF	4
40	86−7921	Cover−Spark Plug Wire	4
41	48−7730	Screw−HH	2
†42	D4PZ−8575−A	Thermostat	1
†43	D1FZ−8255−B	Gasket	1

†Obtain from your local Ford Power Products Dealer.
‡Note: Includes all Ford part numbers from all pages.

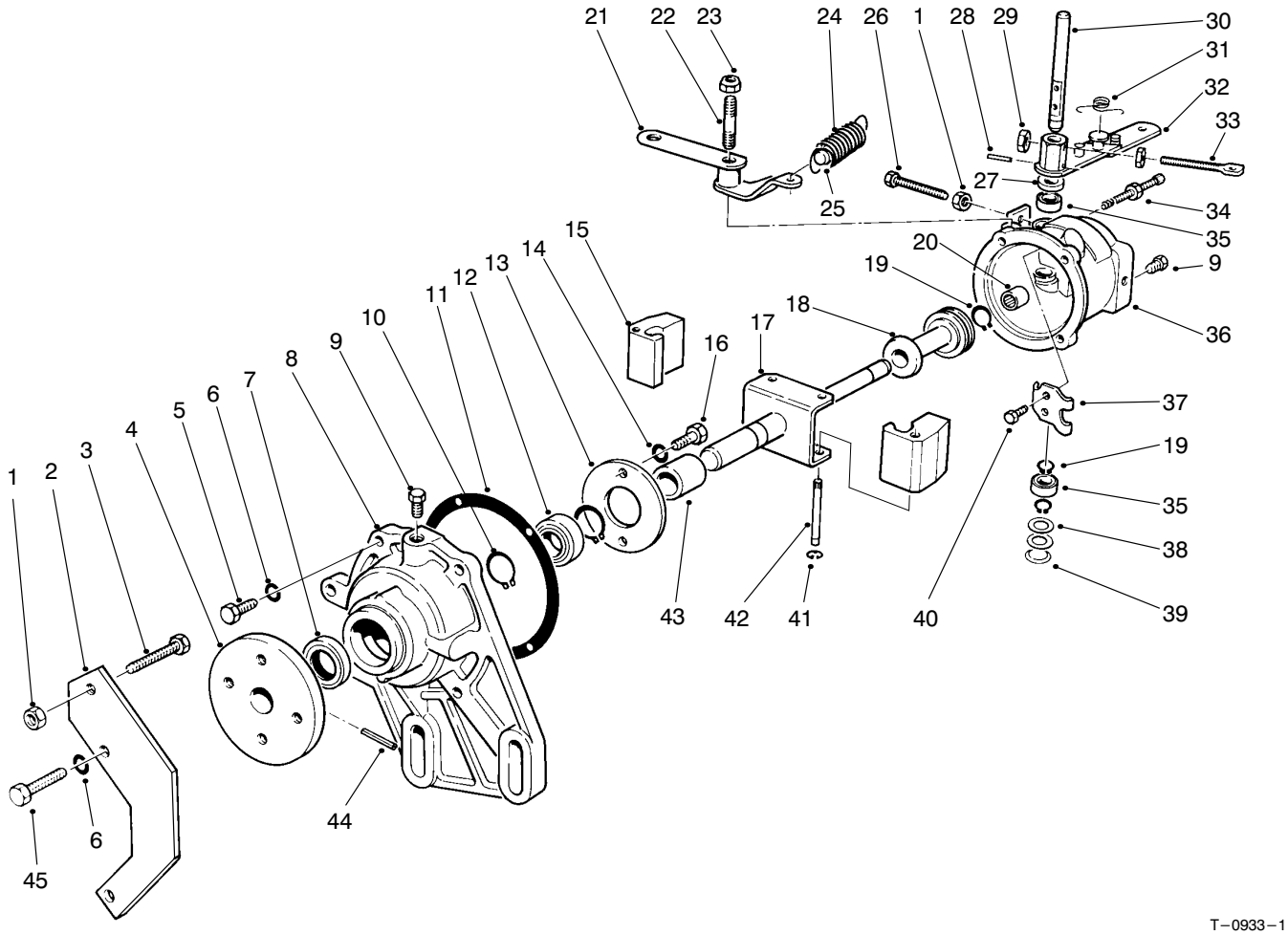

T–0933–1

GOVERNOR ASSEMBLY NO. 67–8360

Ref. No.	Part No.	Description	No. Used
1	3219–1	Nut	2
2	70–2160	Bracket–Speed Stop	1
3	72–5920	Screw	1
4	67–8370	Hub	1
5	18–5620	Screw	2
6	18–5630	Washer–Lock	4
7	18–5580	Seal–Oil Front	1
8	70–2060	Cover–Governor	1
9	285–17	Plug–Pipe	2
10	18–5640	Ring–Retaining	2
11	18–5790	Gasket	1
12	70–2140	Bearing–Front	1
13	70–2130	Clamp–Bearing to Cover	1
14	18–5770	Washer–Lock	2
15	70–2150	Flyweight	2
16	329–3	Screw–HH	2
17	70–2110	Main Shaft & Yoke	1
18	70–2100	Asm–Sleeve & Bearing	1
19	18–5540	Ring–Retaining	3
20	72–5940	Bearing–Needle	1
21	70–2070	Lever–Speed Adjusting	1
22	70–2090	Stud–Pivot Lever	1
23	3296–5	Nut–Lock	1
24	72–5860	Spring–Governor	1

Ref. No.	Part No.	Description	No. Used
24	72–5860	Spring–Governor	1
25	72–5850	Pin–Force Idle	1
26	72–5930	Screw	1
27	71–4780	Seal–Oil Rocker Shaft	1
28	18–5750	Pin	1
29	3219–2	Nut	2
30	72–5890	Shaft–Rocker	1
31	18–5410	Spring–Torsion	1
32	72–5880	Asm–Throttle Lever (Incl. Ref. #31)	1
33	72–5870	Eyebolt	1
34	72–5910	Asm–Bumper Screw	1
35	18–5450	Bearing	2
36	70–2080	Body	1
37	18–5520	Lever–Rocker	1
38	18–5440	Spacer	2
39	18–5430	Plug–Expansion	1
40	18–5530	Screw & Lockwasher	2
41	18–5670	Retainer–Pin Pivot	2
42	18–5660	Pin–Pivot Flyweight	2
43	70–2120	Spacer	1
44	32121–51	Pin–Hub To Shaft	1
45	71–4770	Screw	2

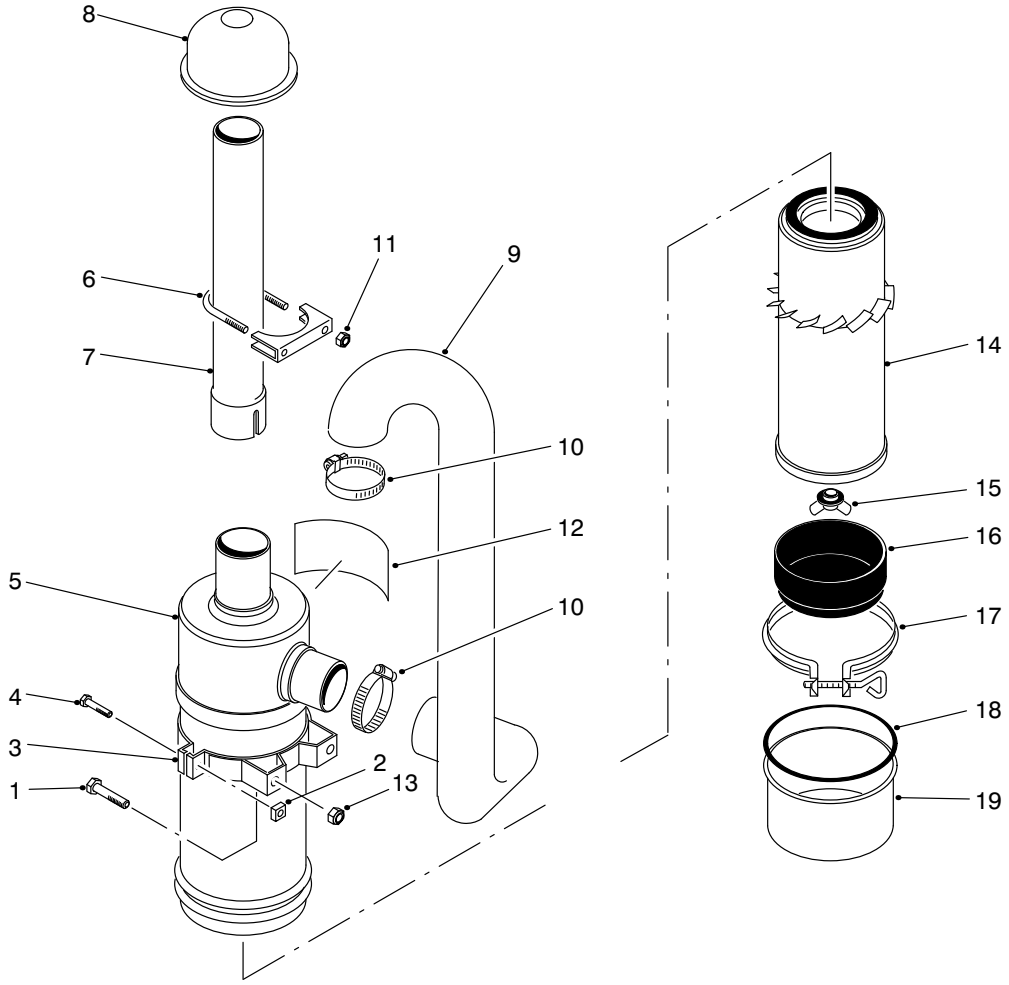

AIR CLEANER ASSEMBLY

Ref. No.	Part No.	Description	No. Used
1	322−3	Screw−HH	4
2	32107−11	Nut	2
3	27−7170	Asm−Band (Incl. Ref. #2 & 4)	2
4	3258−19	Round Hd. Machine Screw	2
5	27−7100	Asm−Air Cleaner (Incl. Ref. #12, 14−19)	1
6	20−4840	Muffler Clamp (Incl. Ref. #11)	1
7	43−3810	Tube Air Cleaner	1
8	27−7180	Asm−Cap, Air Inlet	1
9	82−5590	Hose−Air Cleaner	1

Ref. No.	Part No.	Description	No. Used
10	2412−42	Hose Clamp	2
11	3217−6	Nut	2
12	27−7160	Decal−Instructions	1
13	32128−20	Nut−Lock, Flange Hd.	4
14	27−7110	Asm−Element	1
15	27−7120	Asm−Nut & Gasket	1
16	27−7140	Skirt−Baffle	1
17	27−7130	Asm−Clamp	1
18	80−3330	Gasket	1
19	27−7150	Asm−Cup	1
*	95−3093	Kit−400 Hour Filter (Incl. Ref. #14)	1

*Not Illustrated

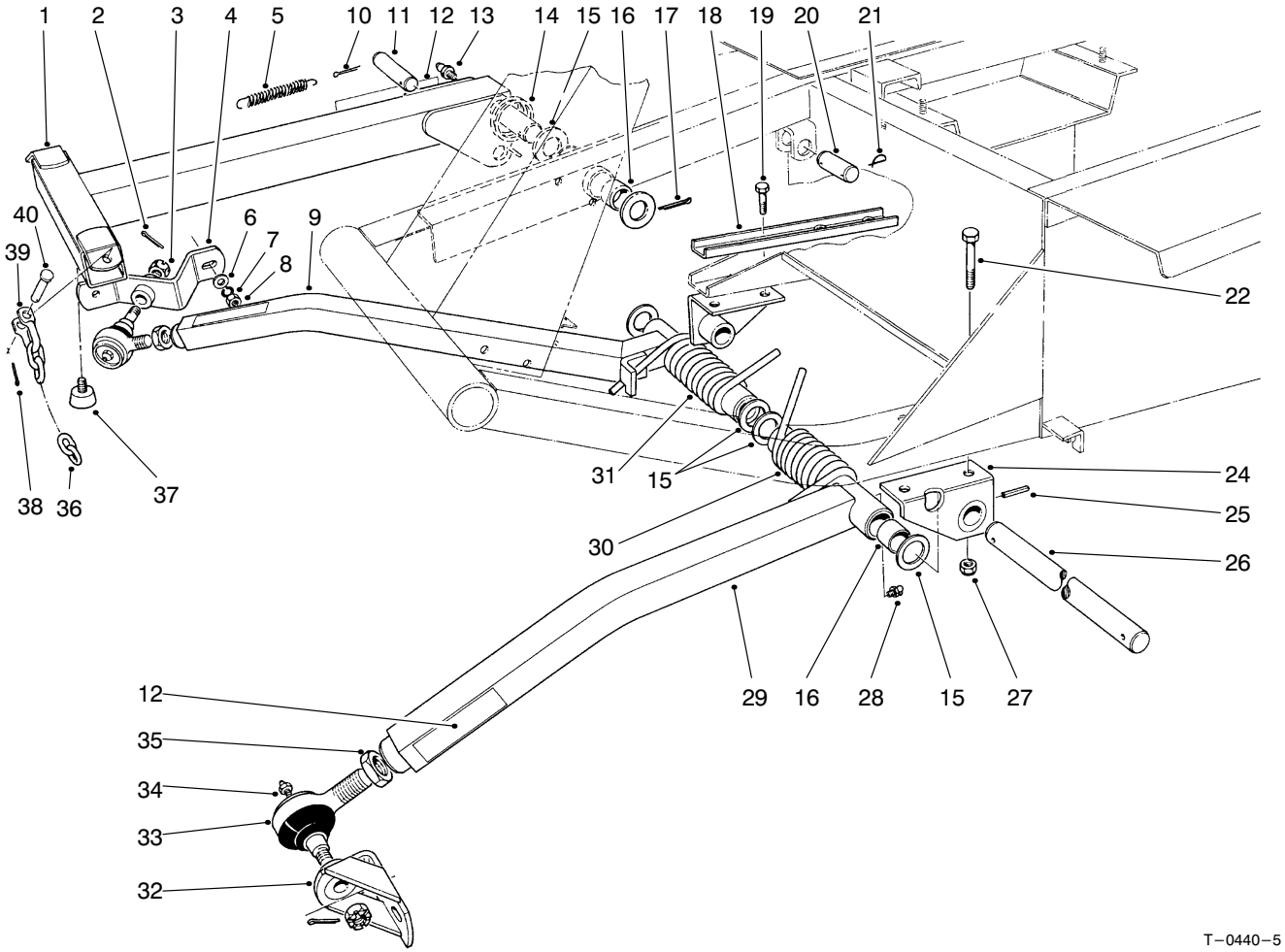

PUSH ARM ASSEMBLY

Ref. No.	Part No.	Description	No. Used
1	66−6370	Lift Arm	1
2	3272−11	Cotter Pin	2
3	32136−2	Nut	2
4	21−3020	Ball Joint Mount Rd. Hd.	1
5	21−1830	Spring Tension	1
6	3256−25	Washer−Flat	1
7	3253−6	Washer−Lock	2
8	3217−8	Full Nut	2
9	66−7150	Push Arm RH (Incl. Ref. #16 & 28)	1
10	3272−24	Cotter Pin	1
11	24−9510	Pin	1
12	55−4300	Warning Decal	3
13	302−5	Grease Fitting	1
14	46−8840	Spring Lift Arm	1
15	5−1754	Washer	6
16	256−126	Bushing	6
17	3272−33	Cotter Pin	1
18	23−1950	Support Reinforcement	1
19	324−4	Capscrew	2
20	3−7292	Pin	1

Ref. No.	Part No.	Description	No. Used
21	5−3126	Spring Pin	3
22	324−11	Screw−HH	2
24	21−2860	Push Arm Bracket	2
25	32121−84	Roll Pin	2
26	21−2990	Shaft Pivot	1
27	32128−42	Nut−Flange	4
28	302−33	Grease Fitting	2
29	21−2960	Push Arm LH (Incl. Ref. #16 & 28)	1
30	21−2900	Spring−Torsion LH	1
31	21−2890	Spring−Torsion RH	1
32	21−3050	Ball Joint Mount LH	1
33	86−8100	Asm−Ball Joint	2
34	302−5	Grease Fitting	2
35	21−3000	Jam Nut	2
36	3−1365	Chain−Lift	3
37	67−9800	Bumper	3
38	3272−10	Cotter Pin	6
39	5−2942	Shackle	1
40	283−10	Pin	1

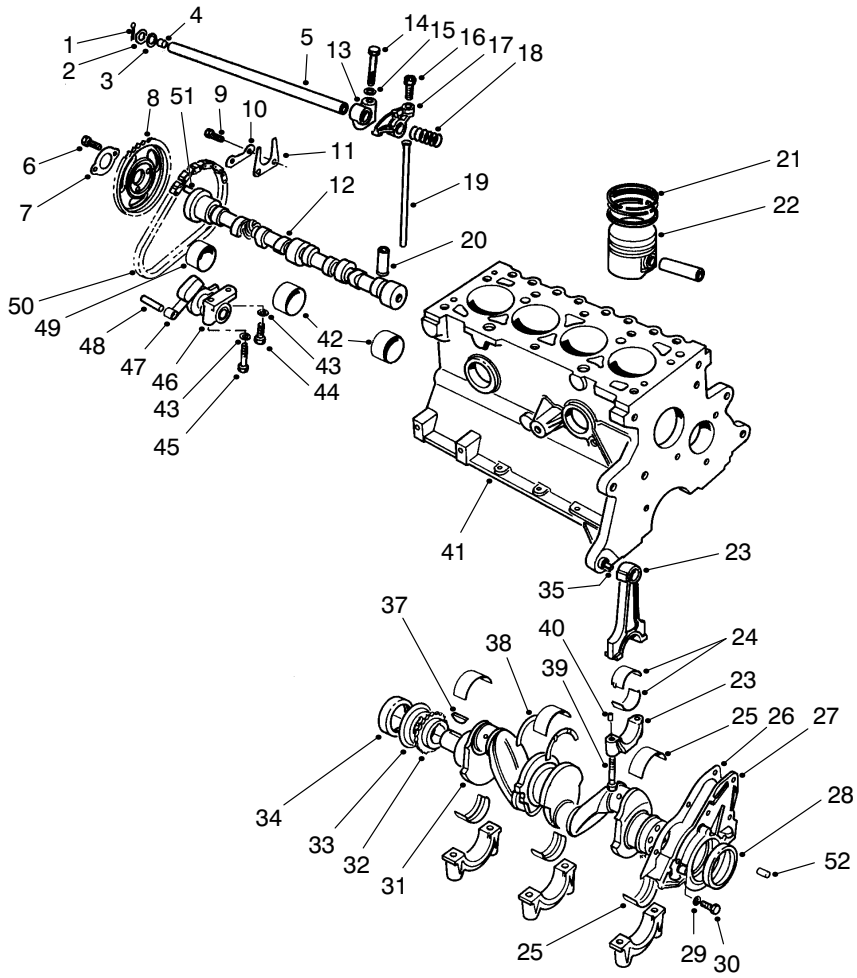

T−1004−1

CRANKSHAFT & CAMSHAFT ASSEMBLY

Ref. No.	Part No.	Description	No. Used
1	72025−S7	Cotter Pin	2
2	77BM−6598−AB	Washer−Spring	2
3	DORY−6590−A	Washer−Flat	2
4	357966−S	Plug−Rocker Arm Shaft	2
5	89BM−6A557−AA	Asm−Rocker Arm Shaft (Incl. Ref. #4)	1
6	E602351−S72	Bolt	2
7	DORY−6258−A	Retainer	1
8	77BM−6256−AA	Sprocket−Camshaft	1
9	N602166−S2	Bolt	2
10	DORY−6255−A	Retainer	1
11	DORY−6269−A	Plate−Thrust	1
12	89BM−6251−AA	Camshaft	1
13	77BM−6531−BB	Support−Rocker Shaft	4
14	E800509−S72	Bolt−Rocker Support	4
15	E630031−S101	Washer	4
16	DORY−6549−B	Screw	8
17	89BM−6529−AB	Valve Rocker Arm−R.H. (Inc. Ref. #16)	4
*	89BM−6K528−AB	Valve Rocker Arm−L.H. (Inc. Ref. #16)	4
18	DORY−6587−A	Spring−Locating	3
19	89BM−6565−AA	Rod−Valve Push	8
20	89BM−6500−AA	Tappet−STD.	8
21	89BM−6148−AA	Ring Set−STD.	4
*	89BM−6148−BA	Ring Set−.020 OS.	A/R
*	89BM−6148−CA	Ring Set−.040 OS.	A/R

Ref. No.	Part No.	Description	No. Used
22	89BM−6102−AA	Asm−Piston STD. (Inc. Ref. #21)	4
*	89BM−6102−BA	Asm−Piston .020 OS. (Inc. Ref. #21)	A/R
*	89BM−6102−CA	Asm−Piston .040 OS. (Inc. Ref. #21)	A/R
23	89BM−6200−AD	Asm−Connecting Rod	4
24	89BM−6211−AA	Bearing−Rod STD.	8
*	89BM−6211−BA	Bearing−Rod .001 U.S.	A/R
*	89BM−6211−CA	Bearing−Rod .010 U.S.	A/R
*	89BM−6211−DA	Bearing−Rod .020 U.S.	A/R
*	89BM−6211−EA	Bearing−Rod .030 U.S.	A/R
25	89BM−6333−AA	Bearing−Crank Upper STD. OD STD. ID	5
*	89BM−6331−AA	Bearing−Crank Lower STD. OD STD. ID	5
*	89BM−6333−BA	Bearing−Crank Upper STD. OD .005 US. ID	A/R
*	89BM−6331−BA	Bearing−Crank Lower STD. OD .005 US. ID	A/R
*	89BM−6333−CA	Bearing−Crank Upper STD. OD .010 US. ID	A/R

*Not Illustrated

Note: Order parts from your local Ford Power Products Dealer.

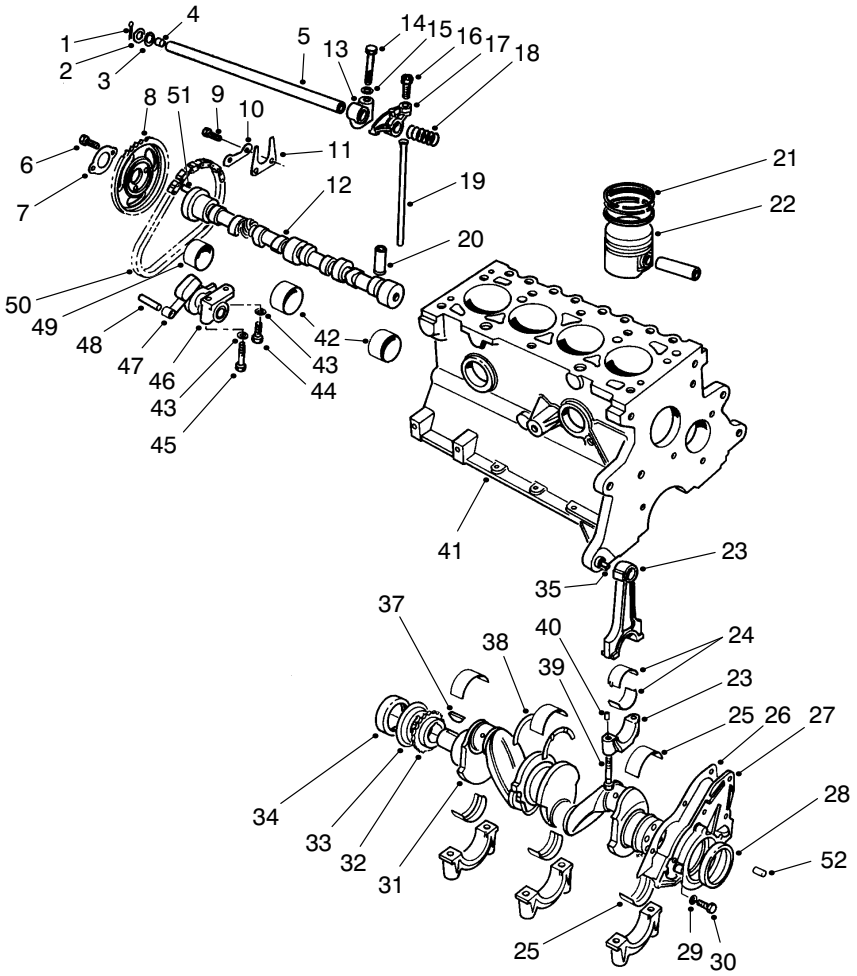

T–1004–1

CRANKSHAFT & CAMSHAFT ASSEMBLY (Continued)

Ref. No.	Part No.	Description	No. Used
*25	89BM–6333–DA	Bearing–Crank Upper 015 OD STD. ID	A/R
*	89BM–6331–DA	Bearing–Crank Lower 015 OD STD. ID	A/R
*	89BM–6333–EA	Bearing–Crank Upper STD. OD .020 US. ID	A/R
*	89BM–6331–EA	Bearing–Crank Lower STD. OD .020 US. ID	A/R
*	89BM–6333–FA	Bearing–Crank Upper STD. OD .030 US. ID	A/R
*	89BM–6331–FA	Bearing–Crank Lower STD. OD .030 US. ID	A/R
*	89BM–6333–GA	Bearing–Crank Upper .015 OS. OD .010 US. ID	A/R
*	89BM–6331–GA	Bearing–Crank Lower .015 OS. OD .010 US. ID	A/R
*	89BM–6333–HA	Bearing–Crank Upper .015 OS. OD .020 U.S. ID	A/R
*	89BM–6331–HA	Bearing–Crank Lower .015 OS. OD .020 US. ID	A/R
26	89BM–6344–BA	Gasket Rear Retainer	1

Ref. No.	Part No.	Description	No. Used
27	86BM–6K318–AA	Asm–Retainer, Rear	1
28	86HM–6701–A1A	Seal Crankshaft Rear	1
29	E630173–S71M	Lockwasher	4
30	E602187–S72	Bolt	4
31	89BM–6303–DA	Asm–Crankshaft	1
32	DORY–6306–A	Sprocket	1
33	D8RZ–6310–A	Slinger Oil	1
34	83BM–6700–A4A	Seal–Front Cover	1
35	70HM–6397–AA	Dowel	2
37	D0RY–6B316–A	Key–Woodruff	1
38	89BM–6A341–AA	Washer–Bearing Thrust STD.	2
*	89BM–6A341–BA	Washer–Bearing Thrust .015 OS.	A/R
39	89BM–6214–DB	Bolt–Connecting Rod	8
40	116336–ES100	Dowel Pin–Rod	8
41	93BM–6011–AA	Cylinder Block	1
42	DORY–6262–C	Bearing–STD. ID STD. OD	2
*	DORY–6262–B	Bearing–STD. ID +.020 OD	A/R
43	34805–S8	Lockwasher	2
44	E602166–S72	Bolt	1
45	E600116–S204	Bolt	1
46	DIFZ–6284–A	Tensioner	1

*Not Illustrated

Note: Order parts from your local Ford Power Products Dealer.

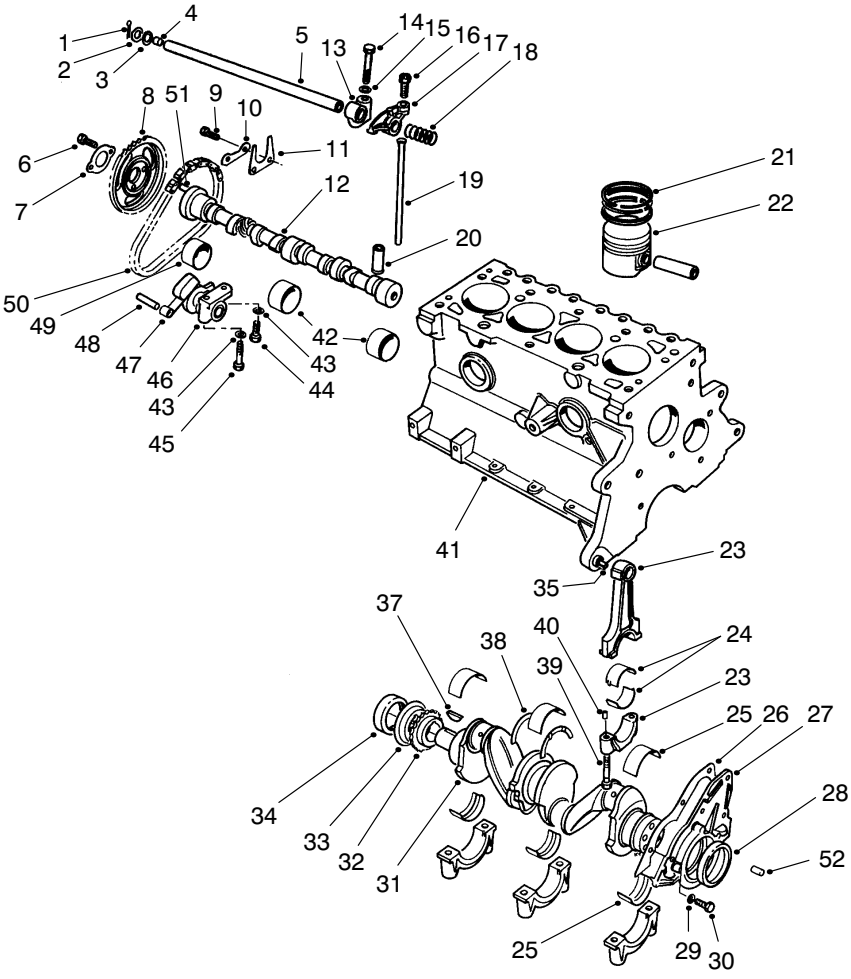

CRANKSHAFT & CAMSHAFT ASSEMBLY (Continued)

Ref. No.	Part No.	Description	No. Used
47	77BM−6K255−AC	Arm−Tensioner	1
48	E43−CP−1	Pin	1
49	DORY−6261−A	Bearing−STD. ID STD. OD	1
*	DORY−6261−B	Bearing−STD. ID +.020 OD	A/R

Ref. No.	Part No.	Description	No. Used
50	DORY−6268−A	Chain	1
51	E93A−6253−A	Dowel	1
52	E−840161−S	Dowel	1
*	93BX−6014−AA	kit−Gasket, Upper	1

*Not Illustrated

Note: Order parts from your local Ford Power Products Dealer.

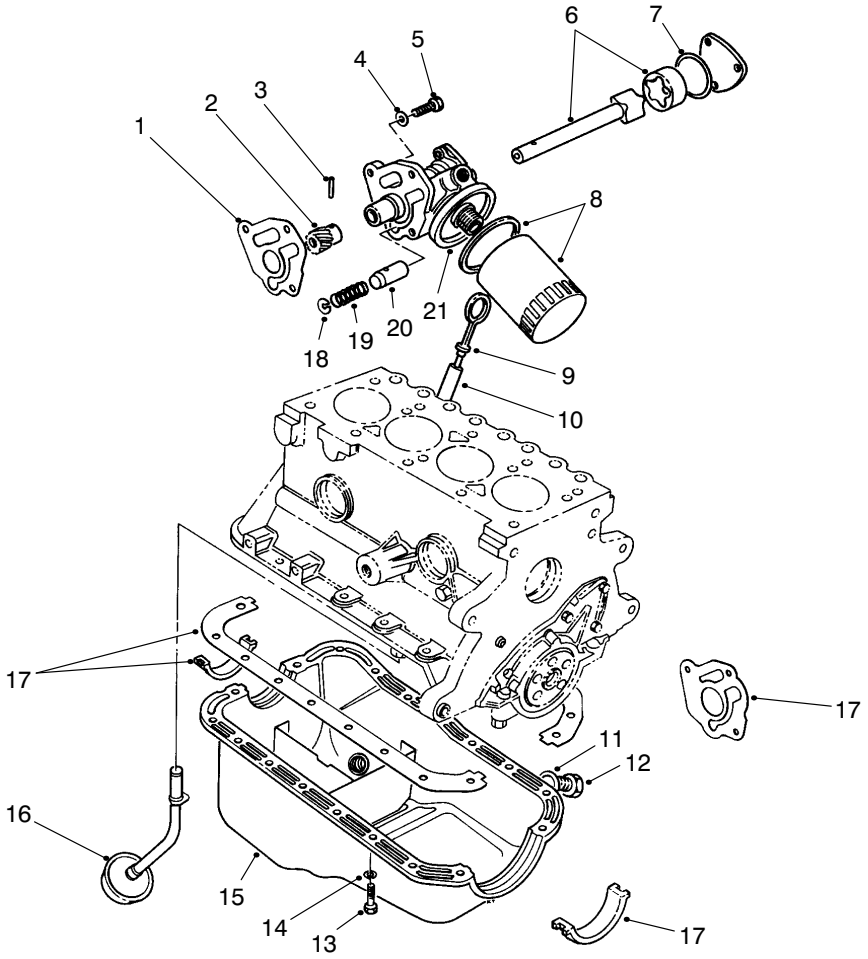

OIL PUMP & FILTER ASSEMBLY

Ref. No.	Part No.	Description	No. Used
1	89BM–6659–AA	Gasket–Oil Pump	1
2	DORY–6652–A	Gear	1
3	72432–S	Pin–Drive Gear	1
4	E630173–571M	Lockwasher	3
5	E800519–S72	Bolt	3
6	DIFZ–6608–B	Rotor & Shaft	1
7	116682–ES	Seal Cover Plate	1
8	95–3304	Filter–Oil	1
9	92BM–6750–AA	Indicator–Oil Level	1
10	89BM–6784–AA	Tube Oil Level Indicator	1
11	E9DZ–6734–B	Gasket Oil Drain Plug	1

Ref. No.	Part No.	Description	No. Used
12	E9DZ–6730–B	Plug–Oil Drain	1
13	E602165–S72	Bolt	18
14	34805–S8	Lockwasher	18
15	86BM–6675–AA	Oil Pan	1
16	86BM–6617–AA	Asm–Oil Pickup Tube	1
17	A850X–6013–A2A	Kit–Gasket Seal	1
18	DORY–6666–A	Plug	1
19	DORY–6670–A	Spring	1
20	DORY–6674–A	Plunger	1
21	D8RZ–6600–A	Pump–Oil	1

Note: Order parts from your local Ford Power Products Dealer.

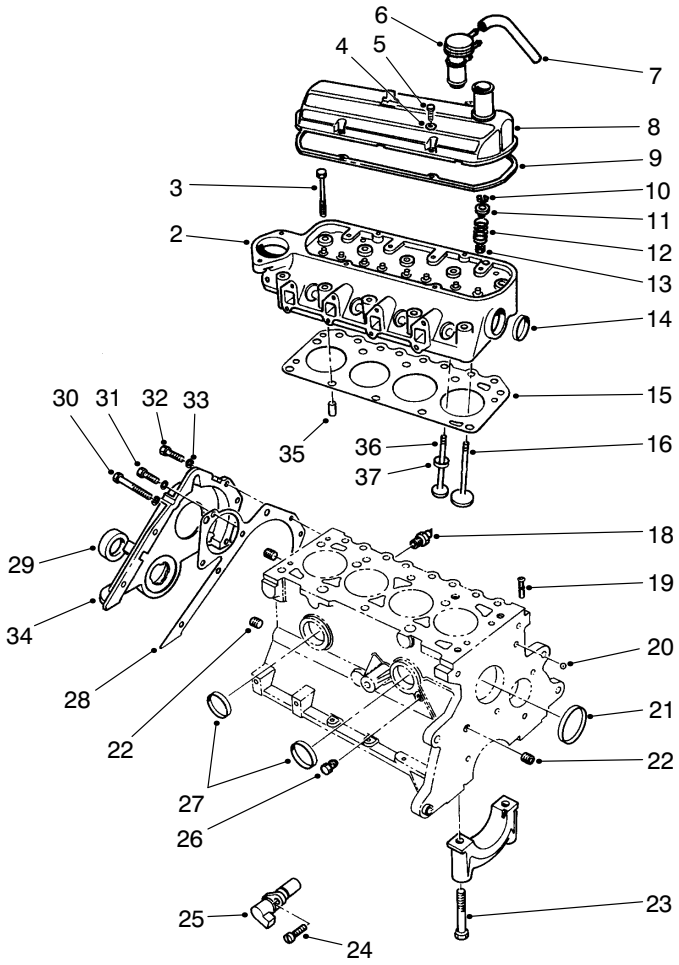

T−1002−1

CYLINDER HEAD & VALVE ASSEMBLY

Ref. No.	Part No.	Description	No. Used
2	89BM−6049−HB	Asm−Cylinder Head	1
3	89BM−6065−DA	Bolt−Cylinder Head	10
4	E630024−S201	Washer−Flat	4
5	E800516−S72	Screw−Rocker Cover	4
6	84BF−6K614−CA	Cap−Oil Fill	1
7	E9JL−6K609−AA	Hose−PCV	1
8	91BM−6582−GA	Cover−Rocker Arm	1
9	77BM−6584−CA	Gasket−Cover	1
10	88WM−6518−AA	Lock Valve Spring	16
11	89BM−6A536−AA	Retainer	8
12	89BM−6513−AA	Spring−Valve	8
13	88WM−6571−BB	Seal−Valve Stem	8
14	DORY−6026−A	Plug	1
15	89BM−6051−B2D	Gasket−Cylinder Head	1
16	89BM−6507−AA	Valve−Intake−Std.	4
*	89BM−6507−AC	Valve−Intake .040mm 0.S.	A/R
18	E7RZ−9278−A	Switch Oil Pressure	1
19	D8RZ−6767−A	Adapter	1
20	E890100−S	Plug−Ball−Oil Gallery	1

Ref. No.	Part No.	Description	No. Used
21	D8RZ−6026−A	Plug	1
22	F1ZZ−6026−A	Plug	3
23	D1FZ−6345−A	Bolt−Bearing Cap	10
24	E802666−S72	Screw	1
25	89BF−66315−AB	Transducer	1
26	353055−S7	Plug	1
27	DORY−6026−A	Plug	2
28	D8RZ−6020−A	Gasket−Front Cover	1
29	83BM−6700−A4A	Seal−Front Cover	1
30	E800518−S72	Bolt	1
31	E600113−S72	Bolt	3
32	E800512−S72	Bolt	4
33	E832108−S71M	Lockwasher	8
34	95BM−6019−AC	Asm−Cover & Seal (Incl. Ref. #29)	1
35	E840126S	Dowel	2
36	89BM−6505−EA	Valve−Exhaust .040mm 0.S.	A/R
*	89BM−6505−CA	Valve−Exhaust Std.	4
37	89BM−6057−A2E	Insert−Exhaust Seat	4

*Not Illustrated

Note: Order parts from your local Ford Power Products Dealer.

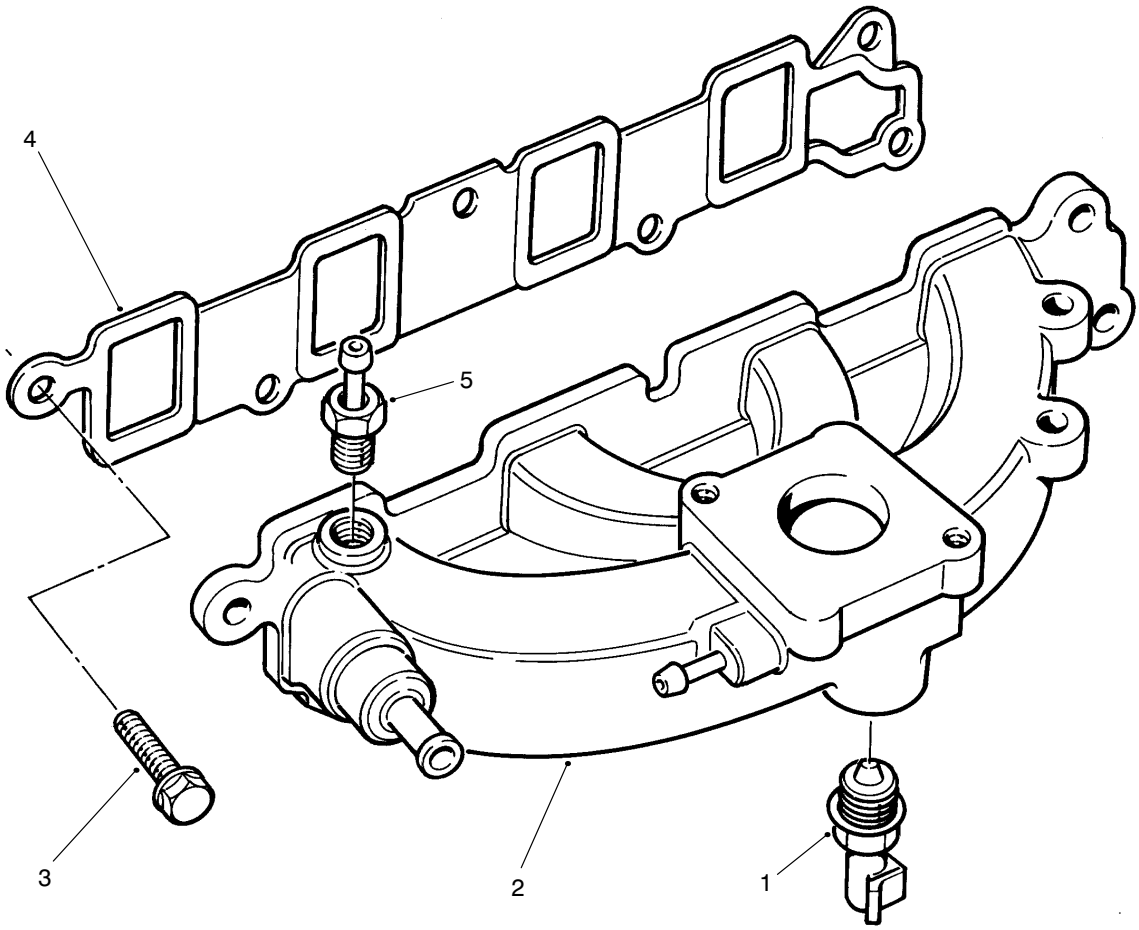

T–1176–1

MANIFOLD ASSEMBLY

Ref. No.	Part No.	Description	No. Used
1	E1AZ–12A648–A	Sensor–Temp. Water	1
2	89BF–9424–AD	Manifold–Intake	1
3	E800157–S72	Bolt	6
4	89BM–9441–AB	Gasket–Intake Manifold	1
5	77BF–9K442–AA	Adapter–Vacuum	1

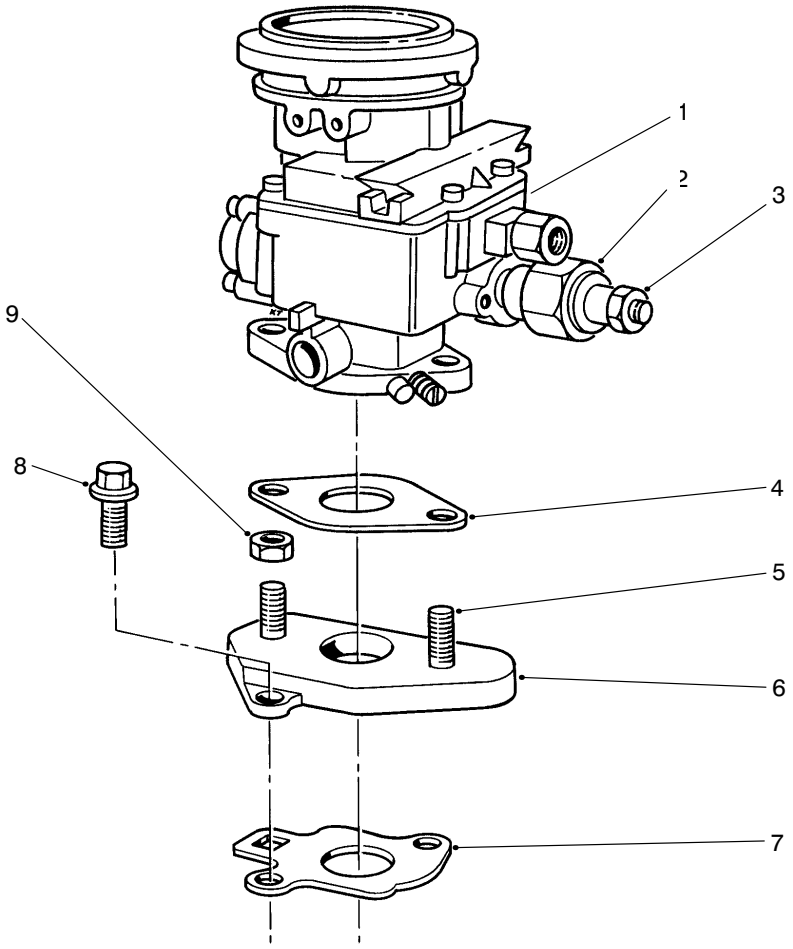

T−0999−1

CARBURETOR ASSEMBLY

Ref. No.	Part No.	Description	No. Used
1	FOJL−9510BA	Asm−Carburetor	1
2	84FB−9K765−BA	Solenoid	1
3	N621903−S2	Nut & Washer	1
4	E5JL−9447−BA	Gasket	1
5	E804216S	Stud	2

Ref. No.	Part No.	Description	No. Used
6	E8JL−9A589−CB	Adapter	1
7	87BF−9447−BA	Gasket	1
8	N800055−S	Bolt	2
9	N620041−S51	Nut	2
*	F0JI−9590−BA	Kit−Repair	1

*Not Illustrated

Note: Order parts from your local Ford Power Products Dealer.

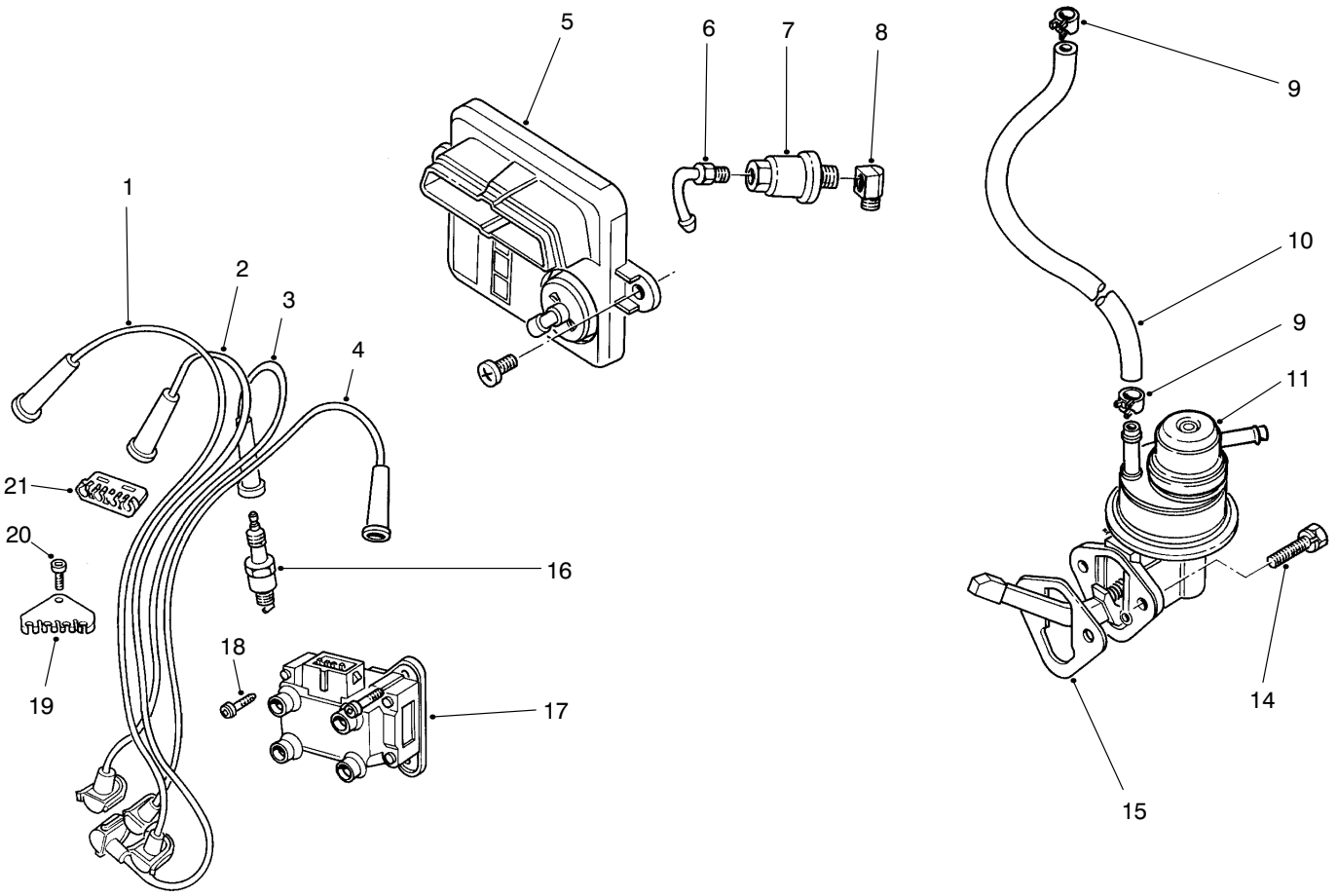

T–1233–1

IGNITION & FUEL PUMP ASSEMBLY

Ref. No.	Part No.	Description	No. Used
1	89BF–12287–AC	Wire–Spark Plug #4	1
2	89BF–12284–AD	Wire–Spark Plug #3	1
3	89BF–12283–AD	Wire–Spark Plug #2	1
4	88BF–12286–AD	Wire–Spark Plug #1	1
5	89FB–12A297–GA	Module–Ignition	1
6	D9JI–9A520–A	Adapter	1
7	95–3305	Filter–Fuel (Motorcraft)	1
8	370829–S101	Elbow	1
9	380882–S32	Clamp–Fuel Hose	A/R
10	381103–S180A	Hose–Fuel	1

Ref. No.	Part No.	Description	No. Used
11	83BF–9350–AA	Fuel Pump	1
14	N602551–S2	Screw & Washer	2
15	83BM–9417–A1A	Gasket–Fuel Pump	1
16	AGRF22	Spark Plug	
*	AGSF22C	(Motorcraft)	4
17	96BF–12024–A1A	Asm–Coil & Bracket	1
18	E804335–S201	Screw	3
19	89BF–12297–AA	Separator–Wire	1
20	E802166–S76	Screw	1
21	E865648–S	Separator–Wire	1

*Not Illustrated

Note: Order parts from your local Ford Power Products Dealer.

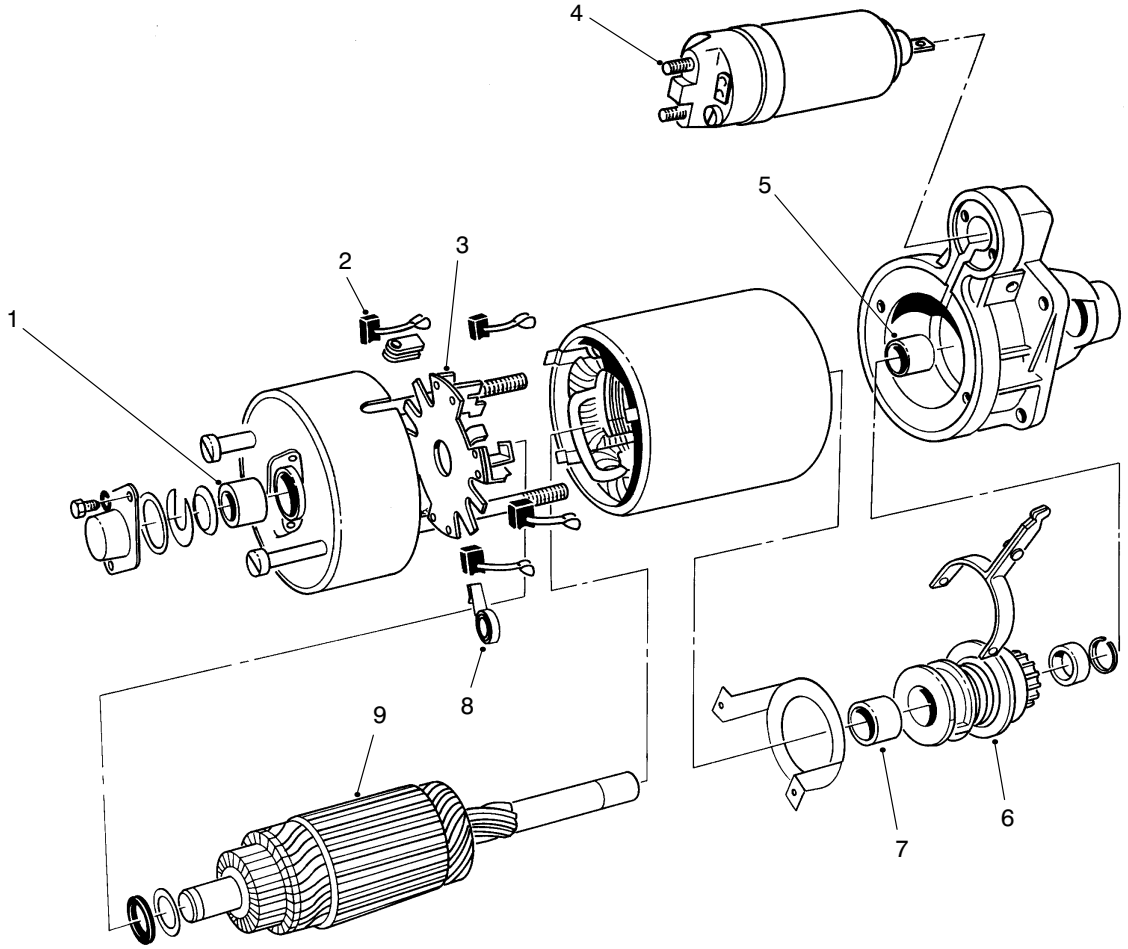

T–1005–1

STARTER MOTOR ASSEMBLY (91AB11000JB)

Ref. No.	Part No.	Description	No. Used
1		Bushing–Brush End	1
2		Brush Set	1
3		Holder–Brush	1
4		Solenoid	1
5		Bushing–Drive End	1

Ref. No.	Part No.	Description	No. Used
6		Asm–Drive	1
7		Bushing–Starter Drive	1
8		Spring–Brush	4
9		Kit–Armature Install	1
*		Kit–Wiring, Service	1

*Not Illustrated

Note: Order parts from your local Ford Power Products Dealer.

TORO PART NUMBER INDEX

Part No.	Description	Pg. No.	Ref. No.	Qty.
3−1365	Chain−Lift	35	36	3
3−6498	Washer	9	18	A/R
3−6657	Clip	8	5	2
3−7243	Spring−Extension	11	13	2
3−7292	Pin	35	20	1
3−8812	Spacer	9	19	1
5−0652	Spacer	32	13	1
5−0652	Spacer	9	37	1
5−0701	Spring Anchor	10	52	1
5−1226	Washer	19	17	A/R
5−1747	Spring	9	21	1
5−1754	Washer	35	15	6
5−2942	Shackle	35	39	1
5−3126	Spring Pin	35	21	3
7−3900	Pad−Brake	11	1	1
10−6830	Stud−Drive	19	24	10
10−8110	Washer	19	18	3
12−9990	Hour Meter	4	16	1
14−8459	Hood	6	44	1
18−1520	Filter−Gas	15	43	1
18−2770	Cable−Ground	2	51	1
18−5410	Spring−Torsion	33	31	1
18−5430	Plug−Expansion	33	39	1
18−5440	Spacer	33	38	2
18−5450	Bearing	33	35	2
18−5520	Lever−Rocker	33	37	1
18−5530	Screw & Lockwasher	33	40	2
18−5540	Ring−Retaining	33	19	3
18−5580	Seal−Oil Front	33	7	1
18−5620	Screw	33	5	2
18−5630	Washer−Lock	33	6	4
18−5640	Ring−Retaining	33	10	2
18−5660	Pin−Pivot Flyweight	33	42	2
18−5670	Retainer−Pin Pivot	33	41	2
18−5750	Pin	33	28	1
18−5770	Washer−Lock	33	14	2
18−5790	Gasket	33	11	1
20−4840	Muffler Clamp	34	6	1
21−0140	Asm−Socket R.H.	19	39	2
21−0141	Asm−Socket R.H.	11	26	1
21−0150	Asm−Socket L.H.	19	*	2
21−0230	Pulley− P.T.O.	9	13	1
21−0400	Spring−Compression	9	48	1
21−1600	Clamp P.T.O. Lever	10	54	1
21−1820	Stud−Retainer Belt	30	1	3
21−1830	Spring Tension	35	5	1
21−1830	Spring−Tension	9	50	2
21−1880	Grip Handle	9	1	1
21−1880	Grip−Handle	12	35	1
21−2000	Rod−Tie	19	41	2
21−2660	Footrest	1	5	1
21−2760	Pad−Foot Rest L.H.	2	46	1
21−2770	Pad−Foot Rest R.H.	2	45	1
21−2820	Hub−Wheel	19	25	2
21−2850	Mount−R.H. Pedal	11	4	1
21−2860	Push Arm Bracket	35	24	2
21−2890	Spring−Torsion RH	35	31	1
21−2900	Spring−Torsion LH	35	30	1
21−2960	Push Arm LH	35	29	1
21−2990	Shaft Pivot	35	26	1
21−3000	Jam Nut	35	35	2
21−3020	Ball Joint Mount Rd. Hd.	35	4	1
21−3050	Ball Joint Mount LH	35	32	1
21−3370	Cable−R.H. Brake	11	*	1
21−3380	Cable−L.H. Brake	11	15	1
21−3600	Foam−Support Tank	15	1	1
21−3610	Foam−Support Tank	15	13	1
21−5640	Joint−Ball	29	9	1
21−7670	Differential Case	17	33	1
21−7690	Pinion Gear	16	6	2
21−7700	Pinion Mate Shaft	17	31	1
21−7720	Thrust Washer	16	4	2
21−7730	Thrust Washer	16	7	2
21−7770	Drive Gear Screw	17	32	5
21−7830	Gear Cover	16	12	1
21−7850	Cap−Plug	16	20	1
21−8020	Spacer−Pinion Bearing	17	25	1
21−8090	Adjustment Shim .003	17	38	A/R
21−8100	Adjustment Shim .005	17	37	A/R
21−8110	Adjustment Shim .010	17	36	A/R
21−8120	Adjustment Shim .030	17	35	A/R
21−8180	Bearing	18	3	2
21−8270	Dowel Pin	16	3	2
21−8360	Clip−Retaining	18	10	2
21−8590	Link −Valve Lever	25	27	1
21−8620	Lever Valve	25	2	1
21−8640	Latch Valve Lever	25	7	1
21−9010	Pivot Mount−Valve Lever	25	11	1
21−9260	Cover−Dust	12	4	1
21−9370	Screw−Adjusting	18	7	2
21−9380	Nut−Pivot	18	8	2
21−9390	Socket−Adjusting Screw	18	6	2
21−9420	Spring−Shoe Return L.H.	18	17	2
21−9430	Spring−Shoe Return R.H.	18	18	2
21−9440	Spring−Adjusting Screw	18	14	2
21−9450	Dust Shield	18	4	2
21−9460	Retainer−Brake Lever	18	15	4
22−7810	Spacer	15	24	1
22−7810	Spacer	4	27	1
22−7820	Asm−Buzzer	4	28	1
22−8330	Plug	28	1	2
22−8340	Spring	28	3	2
22−8350	Ball	28	4	2
22−8360	Pin−Cam	28	6	2
22−8370	Seat−Check Valve	28	5	2
22−8380	Spring Retainer	28	10	1
22−8390	Spring Retainer	28	12	1
22−8400	Spacer Float	28	13	1
22−8410	Spring	28	11	1
22−8420	Spool	28	8	1
22−8480	Spring Ring Spool	28	14	1
22−8490	Snap Ring	28	15	1
22−8500	O−Ring	28	9	2
23−1950	Support Reinforcement	35	18	1
23−2240	Rod−Pump Control	11	17	1
23−2270	Bushing−Rubber	11	16	1
23−5180	Dipstick	15	38	1
23−7270	Nut−Wheel	15	30	10
23−9740	Oil Filter	21	34	1
24−6390	Stud−Battery Hold Down	1	12	2
24−6420	Hold Down−Battery	1	20	1
24−8790	Differential Bevel Gear Side	16	5	2
24−8840	Ring−Wheel Bearing	18	22	2
24−9180	Strut & Lever Parking Brake	18	19	2
24−9510	Pin	35	11	1
24−9830	Support−Axle	17	44	1
25−2380	Thrust Plate	23	50	2
25−2390	Motor Valve Plate	24	57	1
25−2400	Gasket	24	59	1
25−2410	Asm−Accel. Valve	23	17	2
25−2430	Dowel Pin	24	52	2
25−2440	Pump Valve Plate	23	51	1
25−2450	Variable Swashplate	23	48	1
25−2460	Plug−HH	23	28	2
25−2470	Shim Pack	23	29	2
25−2480	Valve Spring	23	44	1
25−2490	Ball	23	9	2
25−2500	Trunnion Shaft	23	43	1
25−2510	Washer−Flat	23	25	2
25−2530	Headless Straight Pin	23	39	1

*Not Illustrated

TORO PART NUMBER INDEX (Cont.)

Part No.	Description	Pg. No.	Ref. No.	Qty.
25−2550	Charge Pump Housing	23	34	1
25−2570	Valve Spring	23	30	1
25−2580	Trunnion Shaft	23	26	1
25−2610	Accel. Valve Spring	23	16	1
25−2630	Back Up Ring	23	14	1
25−2640	Valve Spring	23	8	2
25−2650	Check Valve Plug	23	6	2
25−2680	Asm−Gerotor	23	38	1
25−3190	Charge Pump	23	40	1
25−3210	Lip Seal	23	24	2
25−8640	Screw−Machine	29	11	1
26−6740	Temperature Reset Relay	4	13	1
27−1960	Hub−Engine	31	53	1
27−2360	Switch	4	15	1
27−6590	Spacer Rubber Coupling	21	22	2
27−6600	Spacer Rubber Coupling	21	20	6
27−7100	Asm−Air Cleaner	34	5	1
27−7110	Asm−Element	34	14	1
27−7120	Asm−Nut & Gasket	34	15	1
27−7130	Asm−Clamp	34	17	1
27−7140	Skirt−Baffle	34	16	1
27−7150	Asm−Cup	34	19	1
27−7160	Decal−Instructions	34	12	1
27−7170	Asm−Band	34	3	2
27−7180	Asm−Cap, Air Inlet	34	8	1
27−7290	Decal−Power Take Off	1	16	1
27−7310	Decal−Refueling	2	39	1
27−7320	Decal−Traction Pedal	3	13	1
27−7370	Asm−Brake, P.T.O.	9	25	1
27−7490	Pedal−L.H. Brake	11	41	1
27−7510	Pedal−R.H. Brake	11	42	1
27−7570	Pad−Left Turn	11	38	1
27−7580	Pad−Right Turn	11	2	1
27−7590	Mount−Brake	11	34	1
27−7640	Shaft−Brake Latch	11	36	1
27−7900	Screw−Adjusting	9	35	1
27−8550	Pedal−Parking Bake	11	45	1
27−9270	Mount−Brake Pivot Shaft	11	35	1
28−0650	Flanged Axle Shaft	18	1	2
28−0670	Oil Seal	18	13	2
28−0680	Brake Drum	18	11	2
28−1280	Boot−Cable	1	18	1
28−5220	Wheel−Friction	11	25	1
28−9570	Pump Lever	21	51	1
29−6120	Pump Plate	21	3	1
29−6150	Leaf Spring	21	46	1
29−6163	Micro Switch	21	2	1
29−6170	Extended Leaf Spring	21	7	1
31−0390	Disc−Friction	12	31	1
33−4380	Pump Hub	21	14	1
37−9550	Strap−Tank Fuel	15	4	1
37−9650	Trim	1	26	1
38−1650	Fuel Gauge	4	8	1
38−1660	Ammeter	4	10	1
38−1670	Mounting Clamp	4	7	2
38−3400	Guard−Rubber	25	5	1
38−3400	Guard−Rubber	22	60	1
38−4550	Instrument Cover	1	28	1
39−8020	Trim−Instrument Cover	1	31	1
41−8760	Gasket−Transmission	21	45	1
42−6080	Shim−Axle	15	26	A/R
42−9500	Screw−Metric	30	3	4
42−9850	Washer−Lock	30	4	5
43−1710	Asm−Valve	25	13	1
43−1730	Body	28	7	1
43−2600	Screw−Metric	30	6	3
43−3320	Foam−Radiator	6	33	2
43−3720	Collar Bearing	30	48	1
43−3780	Swivel−Cable Throttle	29	13	1
43−3810	Tube Air Cleaner	34	7	1
43−3860	Shaft−Pivot P.T.O.	9	9	1
43−4300	Trim−Rear Frame	1	32	2
43−5500	Pivot P.T.O.	9	31	1
43−5540	Shaft P.T.O.	9	43	1
43−5550	Shaft− P.T.O. Actuator	9	32	1
43−5570	Arm−P.T.O. Actuator	9	38	1
43−5630	Yoke−P.T.O.	9	51	1
43−5930	Washer−Lock	30	17	3
43−5930	Washer−Metric	6	4	2
43−6550	Snap Ring	16	21	1
43−6710	Adjustment Shim .003	16	15	A/R
43−6711	Adjustment Shim .005	16	16	A/R
43−6712	Adjustment Shim .010	16	17	A/R
43−6713	Adjustment Shim .030	16	18	A/R
43−6750	Roller Bearing Cup	16	10	1
43−6760	Roller Bearing Cone	16	9	1
43−6810	Torque−Spider	18	5	2
43−6840	Lower Housing	17	34	1
43−8600	Spring−Compression	8	11	1
43−8600	Spring−Compression	10	66	1
43−8610	Guide−Spring & Ball Seat	9	5	1
43−8610	Guide−Spring & Ball Seat	8	12	1
43−8620	Guide−Switch Pin	8	9	1
43−8620	Guide−Switch Pin	10	68	1
43−8860	Plunger−Switch	8	10	1
43−8860	Plunger−Switch	10	67	1
43−8870	Boot−Switch	8	1	1
43−8870	Boot−Switch	10	71	1
43−9071	Asm−Switch	10	*	1
43−9071	Asm−Switch	8	*	1
43−9110	Tank−Fuel	15	12	1
44−2210	Warning Light	4	30	1
44−2230	Rubber Coupling	21	17	2
46−2210	Shim−Front Pinion Bearing	16	22	A/R
46−2211	Shim−Front Pinion Bearing	16	*	A/R
46−2212	Shim−Front Pinion Bearing	16	*	A/R
46−2213	Shim−Front Pinion Bearing	16	*22	A/R
46−2214	Shim−Front Pinion Bearing	16	*	A/R
46−2215	Shim−Front Pinion Bearing	16	*	A/R/
46−2216	Shim−Front Pinion Bearing	16	*	A/R
46−2220	Shim−Front Pinion Bearing	16	*	A/R
46−2221	Shim−Front Pinion Bearing	16	*	A/R
46−2222	Shim−Front Pinion Bearing	16	*	A/R
46−2223	Shim−Front Pinion Bearing	16	*	A/R
46−2224	Shim−Front Pinion Bearing	16	*	A/R
46−2225	Shim−Front Pinion Bearing	16	*	A/R
46−2226	Shim−Front Pinion Bearing	16	*	A/R
46−2410	Shim−Front Pinion Bearing	16	*	A/R
46−2411	Shim−Front Pinion Bearing	16	*	A/R
46−2412	Shim−Front Pinion Bearing	17	*22	A/R
46−2413	Shim−Front Pinion Bearing	17	*	A/R
46−2414	Shim−Front Pinion Bearing	17	*	A/R
46−2415	Shim−Front Pinion Bearing	17	*	A/R
46−2416	Shim−Front Pinion Bearing	17	*	A/R
46−2420	Shim−Front Pinion Bearing	17	*	A/R
46−2421	Shim−Front Pinion Bearing	17	*	A/R
46−2422	Shim−Front Pinion Bearing	17	*	A/R
46−2423	Shim−Front Pinion Bearing	17	*	A/R
46−2424	Shim−Front Pinion Bearing	17	*	A/R
46−2425	Shim−Front Pinion Bearing	17	*	A/R
46−2426	Shim−Front PInion Bearing	17	*	A/R
46−6390	Drive Coupling	21	18	1
46−8400	Needle Bearing	24	53	2
46−8410	Motor Shaft	24	58	1
46−8810	Stop−Leaf Spring	22	56	1
46−8840	Spring Lift Arm	35	14	1
48−1800	Kit−Cylinder Block	23	5	2
48−7630	Screw−Metric	6	5	2
48−7730	Screw−HH	32	41	2
48−7730	Screw−Metric	30	5	1

*Not Illustrated

TORO PART NUMBER INDEX (Cont.)

Part No.	Description	Pg. No.	Ref. No.	Qty.
48−7780	Screw−Metric	30	33	2
48−7800	Screw−Metric	30	8	3
48−7890	Nut	31	59	1
48−7890	Nut−Metric	6	3	2
48−8030	Washer−Flat	29	31	1
48−9470	Screw−Metric	30	27	3
48−9590	Washer−Lock	30	7	8
49−8520	Kit−Relief, Implement	24	63	1
53−4420	Decal−Fuel	2	38	1
53−4430	Decal−Oil Fill	3	11	1
53−9480	Washer−Snubber	32	21	2
53−9480	Washer−Snubber	30	35	2
53−9660	V−Belt Torque Team	9	12	1
53−9680	Mount−Engine	32	20	2
53−9680	Mount−Engine	30	46	2
54−7890	Pump Housing	23	22	1
54−9290	Bracket	21	29	2
54−9300	Cover	21	28	1
55−3574	Cap−Tank Fuel	15	11	1
55−4300	Warning Decal	35	12	3
55−7290	Battery (Group Size 24)	1	11	1
56−2460	Washer	19	45	A/R
56−7980	Sleeve−Protective	7	56	1
59−9740	Latch−Draw	6	20	1
60−9760	Nut	26	7	1
60−9760	Nut−Hex	27	7	1
60−9770	Piston	26	6	1
60−9780	Head	26	5	1
61−4960	Repair Kit	26	3	1
61−4980	Shaft−w/Clevis	26	2	1
61−4990	Ring−Retaining	26	4	1
62−3010	Bracket−R.H.	8	15	1
62−3020	Bracket−L.H.	8	17	1
62−4250	Cylinder−Hydraulic	25	21	1
62−4260	Asm−Drive Shaft	9	44	1
62−6840	Sender−Fuel Level	15	6	1
62−7020	Asm−Wheel & Tire 4 Ply	15	*	2
62−7650	Gasket−Tank Fuel	15	5	1
63−1400	Rod−Belt	31	54	1
63−7590	Relay	4	23	1
63−7630	Hose−Vent Fuel	15	10	1
63−8140	Pulley−Idler	30	11	1
63−8360	Key	4	12	1
63−8960	Asm−Hose	6	32	1
63−8970	Hose−Trans. to Steering	12	14	1
63−8980	Hose−Aux. to Valve	12	22	1
63−8990	Hose	25	15	1
63−8990	Hose	12	23	1
63−9010	Asm−Hose	6	24	1
63−9260	Manifold−Valve	25	17	1
66−1250	Cylinder−Hydraulic	25	*	1
66−1930	Nut−Lock	20	6	1
66−1940	Piston	20	5	1
66−2990	Cup−Spindle	19	50	2
66−3160	Screw−HH	29	32	1
66−3240	Cap−Pressure Radiator	6	6	1
66−6140	Decal−Toro	6	9	1
66−6370	Lift Arm	35	1	1
66−6390	Decal−Caution	1	4	1
66−7150	Push Arm RH	35	9	1
66−9760	Nut−Hex.	12	2	1
66−9970	Kit−Spring	13	*	1
66−9980	Kit−Seal	13	*	1
66−9990	Kit−Needle Roller	13	*	1
67−1710	Decal−Caution	1	27	1
67−1720	Decal−Torque	3	10	2
67−1750	Bushing−Axle	19	21	6
67−5450	Piston	27	6	1
67−5460	Head	27	5	1
67−5470	Ring−Retaining	27	4	1
67−5480	Shaft	27	2	1
67−5500	Repair Kit	27	3	1
67−8020	Pump Shaft	23	20	1
67−8050	Needle Bearing	23	35	1
67−8190	Bracket−Engine Support	8	20	2
67−8240	Bracket−Throttle	29	23	1
67−8250	Rod−Throttle	29	16	1
67−8310	Mount−Engine	30	13	1
67−8340	Bar−Spacer	30	16	1
67−8350	Bracket−Guide Belt	30	15	1
67−8360	Governor	29	14	1
67−8370	Hub	33	4	1
67−8380	Pulley−Fan	29	7	1
67−8390	Spacer−Fan	29	6	1
67−8420	Bracket−Muffler	32	15	1
67−8440	Plate−Support Engine	32	25	1
67−8460	Pulley−Engine	30	42	1
67−8480	Support−Engine Rear	32	18	1
67−8510	Belt−Fan	29	5	1
67−8540	Cable−Ground	5	4	1
67−8550	Engine Temperature Gauge	4	11	1
67−8560	Throttle & Choke Control	4	31	2
67−8590	ASM−Radiator	6	37	1
67−8640	Shroud−Radiator	6	17	1
67−8660	Hose−Radiator Lower	6	21	1
67−8690	Support−Column	12	7	1
67−8890	Arm−Idler	30	12	1
67−8910	Spacer−Pulley	30	19	1
67−8920	Shield−Heat	29	27	1
67−8940	Connector−Outlet	32	5	1
67−8960	Weight−Axle Rear	19	1	1
67−9030	Grille−Radiator	6	38	1
67−9080	Motor Housing	23	4	1
67−9090	Plug	23	42	2
67−9100	Gasket	23	10	1
67−9120	Muffler	32	16	1
67−9130	Pipe−Muffler	32	11	1
67−9150	Support−Governor	29	30	1
67−9800	Bumper	35	37	3
68−5140	Cap−Wheel, Steering	12	46	1
68−5370	Decal−Toro	12	1	1
68−8610	Fender−Extension	2	42	1
68−8660	Elbow	21	31	1
68−8990	Head−Filter	21	33	1
68−9160	Bracket	6	29	1
68−9650	Hose−Axle	21	37	1
68−9710	Hose−Steering Cylinder	7	55	2
68−9720	Hose−Cylinder to Steering	12	19	1
68−9730	Hose−Steering to Cylinder	12	18	1
68−9760	Base−Tank Fuel	15	40	1
69−9870	Asm−Wheel & Tire 6 Ply	15	*	2
69−9880	Tire−23” x 10.5” x 12” 6 Ply	15	*	2
70−1380	Sleeve−Protective	12	17	1
70−1390	Sleeve−Protective	12	15	1
70−1630	Hose−Radiator Upper	6	14	1
70−1660	Bracket−E.S.C.	6	42	1
70−1670	Hose−Heater	32	4	1
70−1690	Adapter−Gauge Temp.	32	2	1
70−1790	Strip−Foam Sealing	6	34	1
70−1890	Guard−Flywheel	8	18	1
70−1910	Hose−Vac. Advance	30	25	1
70−1920	Hose−Vacuum	30	20	1
70−2040	Guard−Trim	29	29	1
70−2050	Hose−Breather	32	8	1
70−2060	Cover−Governor	33	8	1
70−2070	Lever−Speed Adjusting	33	21	1
70−2080	Body	33	36	1
70−2090	Stud−Pivot Lever	33	22	1
70−2100	Asm−Sleeve & Bearing	33	18	1
70−2110	Main Shaft & Yoke	33	17	1

*Not Illustrated

TORO PART NUMBER INDEX (Cont.)

Part No.	Description	Pg. No.	Ref. No.	Qty.
70−2120	Spacer	33	43	1
70−2130	Clamp−Bearing to Cover	33	13	1
70−2140	Bearing−Front	33	12	1
70−2150	Flyweight	33	15	2
70−2160	Bracket−Speed Stop	33	2	1
70−2200	Decal−Toro	3	1	1
70−2620	Elbow−90°	21	38	1
71−4540	Washer−Thrust	19	7	1
71−4770	Screw	33	45	2
71−4780	Seal−Oil Rocker Shaft	33	27	1
72−3690	Fender	1	9	2
72−3750	Roller Bearing	23	2	1
72−4320	Switch−Ball	9	3	1
72−4320	Switch−Ball	8	14	1
72−5850	Pin−Force Idle	33	25	1
72−5860	Spring−Governor	33	24	1
72−5860	Spring−Governor	33	24	1
72−5870	Eyebolt	33	33	1
72−5880	Asm−Throttle Lever	33	32	1
72−5890	Shaft−Rocker	33	30	1
72−5910	Asm−Bumper Screw	33	34	1
72−5920	Screw	33	3	1
72−5930	Screw	33	26	1
72−5940	Bearing−Needle	33	20	1
72−9420	Vent Tube Assembly	17	39	1
74−0720	Tube−Manual	8	2	1
75−0560	Asm−Steering Wheel	12	3	1
75−9890	Washer−Shim	10	75	A/R
75−9900	Support−Engine Front	30	9	1
76−1900	O−Ring	23	18	2
76−8750	Decal−Warning	6	13	1
77−3100	Decal−Warning	6	15	2
77−3120	Bracket−Mount, Column	12	9	1
80−2880	Bracket−Steering, Tilt	12	40	1
80−2930	Washer	12	39	1
80−2940	Plate−Pivot	12	29	1
80−2960	Spacer−Tower	12	10	2
80−2980	Boss−Pin	12	32	1
80−3330	Gasket	34	18	1
82−5590	Hose−Air Cleaner	34	9	1
82−8650	Clamp−Half	12	37	1
82−8660	Cover−Tower	12	5	1
82−8670	Rod−Brake Latch	11	10	1
82−8760	Elbow	12	12	1
82−8770	Elbow	12	21	1
82−8930	Decal−Parking Brake	11	12	1
82−8940	Decal−Steering, Tilt	12	44	1
82−8970	Decal−Coolant Engine	6	2	1
82−9010	Disc−Friction	12	38	1
83−7260	Relief Valve Cone	23	31	2
84−5330	Bracket−Hood Prop	6	50	1
84−5380	Strap−Hood Prop	6	49	1
84−8500	Lever−P.T.O.	9	2	1
84−8520	Bracket−P.T.O. Switch	9	6	1
84−8600	Asm−Shoe & Lining	18	16	1
85−7470	Decal−Instrument Panel	4	2	1
86−7040	Rod−Seat Prop	8	6	1
86−7050	Bracket−Switch Actuator	10	73	1
86−7060	Bracket−Hood Hold Down	7	54	1
86−7220	Gear−Transmission Output	21	44	1
86−7230	Spur−Gear	16	14	1
86−7921	Cover−Spark Plug Wire	32	40	4
86−8100	Asm−Ball Joint	35	33	2
86−9370	Panel−Instrument	4	1	1
86−9400	Support−Radiator	6	40	1
86−9410	Support−Seat	7	52	1
86−9580	Upper Housing	17	26	1
86−9600	Asm−Front Axle	15	27	1
88−0070	Floor Plate	2	47	1
88−0470	Tube−Pedal Spacer	11	49	1
88−1640	Pin−Traction Pedal	11	20	1
88−1650	Shaft−Traction Pedal	11	22	1
88−1670	Bracket−Pivot	11	23	1
88−1680	Bracket−Footrest	11	48	1
88−1710	Footrest	11	50	1
88−1720	Pad−Footrest	11	51	1
88−8220	By Pass Valve	23	15	1
92−1661	Hose−Fuel	15	44	1
92−1662	Hose−Fuel	15	22	1
92−1773	Screw−HH	16	11	4
92−1774	Oil Seal	18	2	2
92−4058	Arm−P.T.O.	9	30	1
92−4060	Fork P.T.O.	9	24	1
92−4848	Asm−Gear & Pinion	17	*	1
92−4903	Asm−Upper Hsg., 2WD	17	*	1
92−5723	Bushing−P.T.O. Fork	9	23	2
92−5727	Screw−HH	9	22	2
92−5838	Ball Joint	19	10	2
92−6588	Gland	20	3	1
92−6593	Seal Kit	20	2	1
92−7308	Valve−Steering, Power	12	25	1
92−7310	Bolt−Special	13	36	4
92−7314	Asm−Column	13	*	1
92−7315	Seal	13	28	1
92−7316	Nut−Push On	13	38	4
92−7317	Foam	13	39	1
92−7800	Cover−Battery Access	1	30	1
92−7801	Shield−Cover, Battery	2	52	1
92−7802	Decal−Starting Instructions	1	29	1
92−7816	Axle−Rear	19	20	1
92−7821	Pivot−Steering	19	38	1
92−7828	Cylinder−Hydraulic	20	*	1
92−7828	Cylinder−Hydraulic	19	11	1
92−7833	Hose−Valve to Cylinder	25	19	1
92−7834	Hose	25	22	1
92−7841	Support−Axle Rear	19	5	1
92−7843	Pin−Axle Rear	19	47	1
92−8775	Gasket Kit−Liquid	18	*	2
92−8776	Plug	24	61	4
92−8777	O−Ring	24	62	2
92−8918	Center Section	24	55	1
92−8947	Transmission−Inline	21	42	1
92−9785	Belt−Alternator	30	40	1
93−0307	Retainer−Nut, Lock	19	43	2
93−0309	Washer−Tab	19	35	2
93−0312	Washer	24	60	4
93−1353	Lever−Steering, Tilt	12	34	1
93−3183	Tool Box	2	40	1
93−3184	Cover	2	49	1
93−3189	Decal−Groundsmaster 345	6	8	2
93−3198	Asm−Spindle L.H.	19	23	1
93−3199	Asm−Spindle R.H.	19	46	1
93−3769	Clevis Pin	9	26	1
93−4132	O−Ring	24	54	2
93−4133	Lip Seal	23	36	1
93−7663	Mount−Engine	30	37	1
93−8489	Arm Adjust Alternator	30	41	1
93−9741	Asm−Wire−Harness	5	2	1
94−3304	Pedal−Traction	11	18	1
94−3307	Pad−Front Pedal	11	47	1
94−3308	Pad−Rear Pedal	11	19	1
94−6934	Screw−Socket Hd.	18	21	8
94−6935	Nut−Lock	18	12	8
94−6936	Washer	18	23	8
95−1821	Spring−Compression	11	9	1
95−3093	Kit−400 Hour Filter	15	*	1
95−3093	Kit−400 Hour Filter	22	*	1
95−3093	Kit−400 Hour Filter	34	*	1
95−3304	Filter−Oil	39	8	1
95−3305	Filter−Fuel	43	7	1

*Not Illustrated

TORO PART NUMBER INDEX (Cont.)

Part No.	Description	Pg. No.	Ref. No.	Qty.
98−3864	Brace−Lower Left	3	8	1
98−3865	Brace−Lower Right	3	6	1
98−3866	Brace−Upper	3	3	2
98−3879	Asm−Frame	3	2	1
98−3883	Clamp−Wire	2	48	1
212−93	Wire Clip	10	53	1
217−106	Wheel	19	30	2
217−116	Rim−23” x 10.5” x 12”	15	*	2
217−117	Rim	15	29	2
218−461	Nut−Jam	8	7	2
218−461	Nut−Jam	10	70	2
218−515	Mounting Bracket	4	22	1
218−516	Lens	4	4	1
218−539	Clamp	4	9	1
2112−6	Clamp−Muffler	32	12	1
231−90	Tube−Inner (Optional)	15	*	2
231−95	Tire−23” x 10.5” x 12” 4 Ply	15	*	2
231−101	Tire	15	28	2
231−105	Tire	19	28	2
232−27	Stem−Valve	15	*	2
232−31	Stem−Valve	15	31	2
232−31	Stem−Valve w/Cap	19	34	2
233−17	Knob	11	11	1
233−21	Knob	25	3	1
233−35	Knob−Control	4	3	2
237−7	O−Ring	8	8	1
237−7	O−Ring	10	69	1
237−22	O−Ring	23	13	1
237−22	O−Ring	19	14	1
237−22	O−Ring	12	20	3
237−22	O−Ring	22	58	1
237−30	O−Ring	9	4	1
237−30	O−Ring	12	13	3
237−30	O−Ring	8	13	1
237−30	O−Ring	22	59	1
237−42	O−Ring	25	31	2
237−42	O−Ring	28	2	2
237−42	O−Ring	22	57	2
237−78	O−Ring	25	32	2
237−78	O−Ring	19	12	1
237−80	O−Ring	21	30	1
237−80	O−Ring	23	33	1
237−81	O−Ring	21	32	3
237−86	O−Ring	23	7	4
237−95	O−Ring	23	41	1
241−119	Cap−Dust	19	32	2
242−34	Axle Flange Stud	18	9	10
242−50	Nut−Wheel	19	31	10
249−21	Hook Clamp	1	14	3
249−40	Keeper	6	11	1
2412−3	Clamp−Hose	6	7	4
2412−6	Clamp	15	9	1
2412−31	Clamp−Cable	29	20	1
2412−34	Clamp−Hose	21	36	2
2412−36	Clamp	12	24	2
2412−36	Clamp−Hose	25	16	1
2412−39	Clamp	1	24	2
2412−39	Clamp	6	35	2
2412−39	Clamp−R	32	10	1
2412−42	Hose Clamp	34	10	2
2412−74	Clamp	1	34	1
2412−74	Clamp	7	58	1
2412−96	Clamp−R	15	21	1
2412−108	Clamp	32	9	2
2412−108	Clamp	15	23	3
2412−108	Clamp Hose	25	28	2
2412−119	Clamp−Hose	32	3	2
2412−133	R−Clamp	8	3	2
251−8	Ball Bearing	23	46	1
251−234	Lock Collar	9	41	2
251−252	Ball Bearing	9	40	2
251−252	Bearing	30	49	1
251−259	Ball Bearing	21	5	1
252−82	Needle Bearing	23	23	2
253−129	Closure	19	36	2
254−65	Cone−Tapered Bearing	17	28	2
254−66	Cup−Tapered Bearing	17	27	2
254−72	Cup−Bearing	19	26	4
254−90	Bearing Cup	17	24	1
254−91	Bearing Cone	17	23	1
254−94	Cone−Bearing	19	27	4
256−10	Bushing	11	43	4
256−113	Bushing−Flange	9	47	4
256−121	Bushing−Thrust	19	22	2
256−126	Bushing	35	16	6
256−156	Bushing	11	6	5
256−242	Bushing	19	44	2
283−10	Pin	35	40	1
283−17	Pin	25	26	1
283−42	Clevis Pin	9	7	1
283−58	Pin−Clevis	11	14	2
283−76	Pin−Lynch	7	53	1
285−17	Pipe Plug	23	12	2
285−17	Plug−Pipe	33	9	2
289−37	Nipple−Pipe	15	37	1
2811−9	Elbow−Street	15	36	1
302−2	Grease Fitting	9	39	1
302−5	Fitting	19	19	3
302−5	Fitting−Grease	11	44	2
302−5	Grease Fitting	35	13	1
302−5	Grease Fitting	35	34	2
302−10	Fitting−Grease	9	10	1
302−10	Fitting−Grease	30	47	1
302−11	Fitting	19	15	3
302−33	Grease Fitting	35	28	2
302−55	Fitting−Grease	26	1	2
302−55	Grease Fitting	27	1	2
304−46	Draincock	6	22	1
304−73	Fitting−Straight Barb	25	2	1
304−75	Fitting−90° Barb	25	20	1
321−2	Screw−HH	21	26	2
321−4	Screw−HH	29	18	1
321−4	Screw−HH	21	27	2
321−4	Screw−HH	10	72	1
321−6	Screw−HH	29	24	2
321−6	Screw−HH	15	25	1
321−6	Screw−HH	21	47	2
321−6	Screw−HH	6	51	1
321−23	Screw−HH	25	14	5
321−39	Screw−HH	29	28	2
321−39	Screw−HH	6	45	2
322−3	Screw−HH	34	1	4
322−4	Screw−HH	23	37	4
322−4	Screw−HH	12	43	1
322−5	Screw−HH	4	17	2
322−6	Screw−HH	7	57	1
322−6	Screw−HH	21	21	6
322−6	Screw−HH	1	33	1
322−8	Screw−HH	21	25	2
322−12	Screw−HH	29	1	4
322−17	Screw−HH	21	8	1
323−6	Screw−HH	12	27	2
323−6	Screw−HH	17	46	1
323−7	Screw−HH	21	39	2
323−13	Screw−HH	11	32	1
323−14	Screw−HH	6	30	3
323−14	Screw−HH	11	56	1
323−42	Screw−HH	11	54	1
323−56	Screw−HH	23	3	4
324−4	Capscrew	35	19	2

*Not Illustrated

TORO PART NUMBER INDEX (Cont.)

Part No.	Description	Pg. No.	Ref. No.	Qty.
324−11	Screw−HH	32	22	2
324−11	Screw−HH	35	22	2
324−11	Screw−HH	30	34	2
329−3	Screw−HH	33	16	2
3210−7	Screw−HH	21	6	1
3210−7	Screw−HH	16	19	8
3212−17	Screw−HH	30	29	1
3217−5	Nut	29	22	1
3217−6	Nut	1	10	2
3217−6	Nut	34	11	2
3217−6	Nut	4	19	2
3217−7	Nut−Hex	11	28	2
3217−8	Full Nut	35	8	2
3217−9	Nut	17	42	2
3217−16	Nut	21	48	2
3217−26	Nut−Hex.	4	21	1
3217−27	Nut−Hex.	4	34	2
3217−29	Nut−Hex.	4	33	6
3218−5	Nut−Jam	11	3	2
3218−7	Nut−Jam	12	42	1
3219−1	Nut	33	1	2
3219−2	Nut	16	1	8
3219−2	Nut	33	29	2
3219−2	Nut−Hex	21	9	1
3219−3	Nut	9	33	1
3219−7	Nut−Hex.	9	16	1
3219−14	Nut	4	5	4
3219−14	Nut	15	42	1
3219−14	Nut−Hex	29	10	3
3220−3	Nut−Jam	11	27	1
3220−3	Nut−Jam	19	42	8
3220−5	Nut−Jam	11	46	1
3220−5	Nut−Jam R.H. Thread	19	40	2
3220−6	Nut	13	27	1
3220−6	Nut−Jam	19	37	4
3220−7	Nut−Jam	19	29	2
3220−12	Nut−Jam L.H. Thread	19	*	2
3229−1	Bolt−Carriage	1	36	5
3230−1	Bolt−Carriage	11	52	2
3230−2	Bolt−Carriage	15	14	3
3231−21	Bolt−Carriage	11	31	2
3231−22	Bolt−Carriage	30	14	2
3231−25	Screw−Carriage	3	7	4
3231−28	Bolt−Carriage	30	10	1
3234−1	Screw−HHF	6	18	2
3234−5	Screw−HHF	29	26	1
3234−6	Screw−HHF	8	19	2
3234−11	Capscrew w/Locking Flange	1	23	5
3234−11	Screw−Flange Lock	30	36	5
3234−11	Screw−HH	11	39	3
3234−11	Screw−HHF	8	21	6
3234−11	Screw−HHF	29	33	2
3234−11	Screw−HHF	15	35	2
3234−11	Screw−HHF	32	39	4
3234−12	Screw−HHF	1	7	4
3234−13	Screw	19	49	2
3234−14	Screw−HH	2	43	2
3234−14	Screw−HHF	6	19	6
3234−17	Screw−HH	12	8	2
3234−17	Screw−HHF	8	16	4
3234−18	Screw−HHF	31	56	1
3234−24	Screw−HHF	3	4	2
3234−24	Screw−HHF	6	36	2
3234−25	Screw−HHF	3	5	10
3234−32	Screw−HHF	19	3	6
3241−5	Screw−Sq. Hd. Set	31	52	2
3241−5	Square Hd. Set Screw	21	16	2
3246−1	Screw−Set	9	46	2
3246−3	Screw−Set	9	29	4
3249−11	Screw−Round Hd. Mach.	21	1	2
3250−29	Screw−PH	30	22	1
3253−3	Washer−Lock	15	2	2
3253−3	Washer−Lock	29	21	1
3253−4	Washer−Lock	29	2	4
3253−4	Washer−Lock	1	8	2
3253−6	Washer−Lock	35	7	2
3253−12	Washer−Lock	29	17	1
3253−17	Washer−Lock	15	41	1
3253−21	Washer−Lock	11	29	4
3253−21	Washer−Lock	21	40	2
3253−21	Washer−Lock	17	45	1
3253−21	Washer−Lock	10	55	4
3254−1	Washer−Lock	4	6	6
3254−2	Washer−Lock, Int. Tooth	4	18	6
3254−2	Washer−Lock	2	54	1
3254−7	Washer−Lock	9	15	1
3254−9	Washer−Lock	21	49	2
3255−5	Washer−Lock	4	20	1
3255−7	Washer−Lock	21	50	3
3255−8	Washer−Lock	16	2	8
3255−24	Washer−Lock	4	32	5
3256−2	Washer−Flat	29	3	4
3256−3	Washer−Flat	21	23	4
3256−3	Washer−Flat	12	28	4
3256−5	Washer−Flat	17	43	2
3256−6	Washer−Flat	9	20	1
3256−6	Washer−Flat	21	53	1
3256−21	Washer−Flat	30	23	1
3256−22	Washer−Flat	11	8	1
3256−22	Washer−Flat	29	19	1
3256−22	Washer−Flat	6	48	5
3256−23	Washer−Flat	2	41	2
3256−25	Washer−Flat	35	6	1
3256−26	Washer−Flat	11	40	1
3256−28	Washer−Flat	9	14	4
3256−41	Washer−Flat	9	36	4
3256−46	Washer−Flat	12	26	2
3256−56	Washer−Flat	29	25	1
3257−5	Key−Woodruff	9	11	3
3257−32	Woodruff Key	21	15	1
3257−32	Woodruff Key	23	21	1
3257−33	Key−Woodruff	30	43	1
3258−19	Round Hd. Machine Screw	34	4	2
3269−10	Washer	6	46	2
3269−13	Rivet	6	12	2
3272−5	Pin−Cotter	11	7	3
3272−6	Cotter Pin	25	8	1
3272−6	Cotter Pin	9	8	1
3272−6	Pin−Cotter	11	21	6
3272−10	Cotter Pin	35	38	6
3272−10	Cotter Pin	22	54	1
3272−11	Cotter Pin	35	2	2
3272−11	Pin−Cotter	9	28	1
3272−13	Pin−Cotter	19	33	2
3272−22	Pin−Cotter	9	17	2
3272−24	Cotter Pin	35	10	1
3272−33	Cotter Pin	35	17	1
3274−47	Screw−HSFH	11	33	1
3290−134	Screw Machine Hex. Hd.	4	25	4
3290−144	Screw−HH	2	53	4
3290−144	Screw−Machine	1	15	6
3290−224	Washer−Pyramidal	31	55	1
3290−271	Rivet	6	10	4
3290−357	Nut−Lock, Flange	30	2	12
3290−357	Nut−Lock, Flange	32	14	5
3290−357	Nut−Lock, Flange	29	15	2
3290−357	Nut−Lock, Flange	8	22	6
3290−357	Nut−Lock, Flange	1	25	5
3290−360	Screw Machine Hex. Hd.	4	26	1
3290−378	Cable Tie	1	21	2

*Not Illustrated

TORO PART NUMBER INDEX (Cont.)

Part No.	Description	Pg. No.	Ref. No.	Qty.
3290−379	Cable Tie	4	24	A/R
3290−379	Cable−Tie	31	58	A/R
3290−379	Tie−Cable	12	16	A/R
3290−379	Tie−Cable	6	31	A/R
3296−2	Nut−Lock	1	17	9
3296−5	Nut−Lock	33	23	1
3296−6	Nut−Lock	9	34	1
3296−12	Nut−Lock	4	29	5
3296−16	Nut−Lock	6	47	1
3296−16	Nut−Lock	10	74	1
3296−20	Nut−Lock	29	12	1
3296−20	Nut−Lock	12	30	4
3296−28	Nut−Lock	9	27	1
3296−29	Nut−Lock	21	4	1
3296−29	Nut−Lock	1	35	2
3296−29	Nut−Lock	12	36	2
3296−42	Nut−Lock	21	10	6
3296−42	Nut−Lock	25	10	5
32103−2	Nut−Wing	1	13	2
32103−2	Nut−Wing	6	41	2
32104−6	Screw−TAP	10	56	4
32104−96	Screw−HH	15	3	1
32104−109	Screw−HHF	6	16	4
32107−11	Nut	34	2	2
32120−8	Retaining Ring	23	1	1
32120−11	Retaining Ring	23	47	1
32120−15	Retaining Ring	23	45	1
32120−22	Ring−Retaining	9	42	2
32120−22	Ring−Retaining Int.	30	50	1
32120−69	Ring−Retaining Ext.	31	51	1
32120−72	Ring−Retaining External	21	43	1
32121−6	Roll Pin	21	11	1
32121−9	Pin−Roll	9	49	1
32121−15	Roll Pin	17	30	1
32121−16	Pin−Roll	11	24	1
32121−24	Roll Pin	22	55	1
32121−51	Pin−Hub To Shaft	33	44	1
32121−73	Pin Slotted Spring	25	9	1
32121−84	Roll Pin	35	25	2
32121−91	Coil Spring Pin	23	49	3
32128−13	Nut−Lock, Flange	2	37	5
32128−20	Nut−Flange	15	33	3
32128−20	Nut−Flange	12	41	1
32128−20	Nut−HF	6	26	7
32128−20	Nut−Lock, Flange Hd.	34	13	4
32128−21	Nut−HF	6	25	3
32128−21	Nut−Lock HFH	3	9	4
32128−23	Nut−Lock, Flange	19	2	4
32128−23	Nut−Lock, Flange	30	44	2
32128−25	Nut−Flange Lock	11	53	2
32128−33	Nut−HHF	29	8	4
32128−33	Nut−Lock, Flange	6	39	2
32128−37	Nut−Lock, Flange	32	19	2
32128−37	Nut−Lock, Flange	30	45	2
32128−42	Nut−Flange	35	27	4
32128−43	Nut−HF	11	55	2
32128−48	Nut−Hex Flange	30	32	1
32136−2	Nut	35	3	2
32144−10	Screw−HWHTF	12	6	6
32144−10	Screw−Self Tapping	2	44	11
32144−10	Screw−TAP	6	1	5
32144−10	Screw−TAP	25	4	2
32144−10	Screw−TAP	8	4	2
32144−14	Screw−TAP	19	48	2
32144−21	Screw	12	45	1
32144−53	Screw−HWHTF	15	7	5
32144−67	Screw−Thread Forming	15	32	4
32144−112	Thread Forming Screw	16	13	8
32146−20	Nut−Lock	19	6	1
32148−9	Insert−Threaded	3	12	1
32149−2	Nut	11	37	1
32151−36	Ring−Retaining	19	16	3
32151−46	Retaining Ring	23	27	2
32151−104	Ring−Retaining	19	9	2
32152−1	Nut−Lock	21	19	8
32153−2	Nut−Hex.	12	11	2
32153−2	Nut−Lock	11	30	2
32153−2	Nut−Lock	31	57	1
340−54	Fitting−45°	19	13	1
340−70	Nut−Lock, Bulkhead	6	28	2
340−71	Union−Bulkhead	6	27	2
340−77	Elbow	21	12	1
340−97	Fitting−90°	25	25	1
340−99	Fitting−90° Elbow	25	12	1
340−99	Elbow	21	13	1
340−110	Elbow−90°	25	24	1
340−112	Elbow 90°	25	18	1
353−508	Plug−Drain	21	41	1
353−512	Plug	25	1	1
353−536	Fitting−Tank, Fuel	15	8	2
353−550	Plug−Hex. Hd.	23	19	2
353−551	Plug−HH	23	32	1
353−987	Elbow	21	35	1
384007−5	Clamp−Valve	30	21	1

*Not Illustrated

PRODUCT CHANGES

In an effort to make improvements available to TORO owners as quickly as possible minor changes are incorporated into Toro's products from time to time that do not become immediately shown in the Parts Catalog. If such a change has been made in your unit which is not reflected in your manual see your TORO Distributor or his Authorized TORO Service Dealer for information and part numbers.

IDENTIFICATION AND ORDERING

MODEL AND SERIAL NUMBERS
The Groundsmaster 345 has two identification numbers; a model number and a serial number. The two numbers are stamped on a plate which is located on the main frame under the seat. In any correspondence concerning the Groundsmaster 345, supply model and serial numbers to assure that correct information and replacement parts are obtained.

To order replacement parts from an Authorized TORO Service Dealer supply the following information:
1. Model and serial number of the Groundsmaster 345.
2. Part number description and the quantity of part(s) desired.

NOTE: Do not order by reference number if a parts catalog is being used; use the PART NUMBER.

TABLE OF CONTENTS

Description	Page
Main Frame	1−3
Instrument Panel Assembly	4
Electrical Schematic	5
Radiator & Hood Assembly	6−7
Interlock Assembly	8
Power Take Off Assembly	9−10
Brake Pedal Assembly	11
Power Steering Assembly	12
Power Steering & Valve Assembly No. 92−7308	13
Hydraulic Schematic	14
Front Axle and Fuel Tank Assembly	15
Front Axle Assembly No. 86−9600	16−17
Brake Assembly	18
Rear Wheel & Axle Assembly	19
Hydraulic Steering Cylinder Assembly No. 92−7828	20
Hydrostatic Transmission	21−22
Transmission Assembly No. 92−8947	23−24
Valve and Cylinder Assembly	25
Hydraulic Lift Cylinder Assembly No. 66−4250 (2−1/2" Bore)	26
Hydraulic Lift Cylinder Assembly No. 66−1250 (3" Bore)	27
Control Valve Assembly No. 43−1710	28
Engine Assembly	29−32
Governor Assembly No. 67−8360	33
Air Cleaner Assembly	34
Push Arm Assembly	35
Crankshaft & Camshaft Assembly	36−38
Oil Filter & Pump Assembly	39
Cylinder Head & Valve Assembly	40
Manifold Assembly	41
Carburetor Assembly	42
Ignition & Fuel Pump Assembly	43
Starter Motor Assembly	44
TORO Part Number Index	45−51

Compliance with Radio Interference Regulations Certified.
Certifie Conforme au Reglement sur le Brouillage Radioelectrique.

Litho in U.S.A.