Form No. 3371-768 Rev A

TORO®

Count on it.

Operator's Manual

TimeCutter® MX 4260 Riding Mower

Model No. 74640—Serial No. 312000001 and Up

To register your product or download an *Operator's Manual* or *Parts Catalog* at no charge, go to www.Toro.com.

Original Instructions (EN)

This machine is a ride-on, rotary-blade lawnmower intended to be used by homeowners in residential applications. It is primarily designed for cutting grass on well-maintained lawns. It is not designed for cutting brush, mowing grass and other growth alongside highways, or for agricultural uses.

WARNING

CALIFORNIA
Proposition 65 Warning

The engine exhaust from this product contains chemicals known to the State of California to cause cancer, birth defects, or other reproductive harm.

Important: This engine is not equipped with a spark arrester muffler. It is a violation of California Public Resource Code Section 4442 to use or operate the engine on any forest-covered, brush-covered, or grass-covered land. Other states or federal areas may have similar laws.

This spark ignition system complies with Canadian ICES-002.

⚠ WARNING

Removing standard original equipment parts and accessories may alter the warranty, traction, and safety of the machine. Failure to use original Toro parts could cause serious injury or death. Making unauthorized changes to the engine, fuel or venting system, may violate EPA and CARB regulations.

Replace all parts including, but not limited to, tires, belts, blades, and fuel system components with original Toro parts.

The enclosed *Engine Owner's Manual* is supplied for information regarding the US Environmental Protection Agency (EPA) and the California Emission Control Regulation of emission systems, maintenance, and warranty. Replacements may be ordered through the engine manufacturer.

For models with stated engine horsepower, the gross horsepower of the engine was laboratory tested by the engine manufacturer in accordance with SAE J1995 and rated to J2723.

Introduction

Read this information carefully to learn how to operate and maintain your product properly and to avoid injury and product damage. You are responsible for operating the product properly and safely.

You may contact Toro directly at www.Toro.com for product and accessory information, help finding a dealer, or to register your product.

Whenever you need service, genuine Toro parts, or additional information, contact an Authorized Service Dealer or Toro Customer Service and have the model and serial numbers of your product ready. Figure 1 identifies the location of the model and serial numbers on the product. Write the numbers in the space provided.

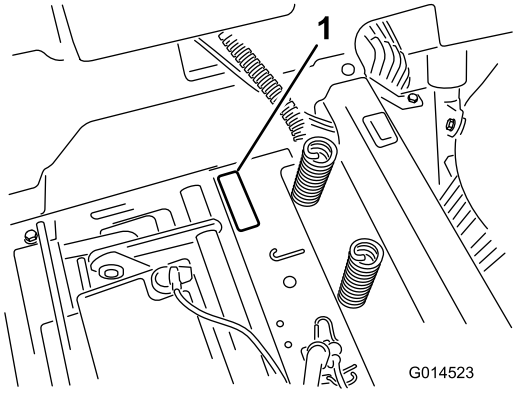

Figure 1
Under the seat

1. Model and serial number plate

Write the product model and serial numbers in the space below:

Model No. _____

Serial No. _____

This manual identifies potential hazards and has safety messages identified by the safety alert symbol (Figure 2), which signals a hazard that may cause serious injury or death if you do not follow the recommended precautions.



Figure 2

1. Safety alert symbol.

© 2011—The Toro® Company
8111 Lyndale Avenue South
Bloomington, MN 55420

Contact us at www.Toro.com.
Printed in the USA.
All Rights Reserved

This manual uses two other words to highlight information. **Important** calls attention to special mechanical information and **Note** emphasizes general information worthy of special attention.

Contents

Introduction 2
Safety 4
- Safe Operating Practices 4
- Toro Riding Mower Safety 6
- Slope Indicator 7
- Safety and Instructional Decals 8

Product Overview 13
- Controls 14

Operation 15
- Think Safety First 15
- Before Starting 17
- Starting the Engine 18
- Operating the Blades 19
- Testing the Safety Interlock System 19
- Stopping the Engine 20
- Driving 20
- Stopping the Machine 22
- Adjusting the Height of Cut 22
- Positioning the Seat 22
- Adjusting the Motion Control Levers 22
- Pushing the Machine by Hand 23
- Grass Deflector 23
- Operating Tips 24

Maintenance 26
- Recommended Maintenance Schedule(s) 26
- Premaintenance Procedures 27
  - Raising the Seat 27
- Lubrication 27
  - Greasing the Bearings 27
- Engine Maintenance 28
  - Servicing the Air Cleaner 28
  - Servicing the Engine Oil 29
  - Servicing the Spark Plug 31
  - Cleaning the Cooling System 32
- Fuel System Maintenance 32
  - Replacing the In-line Fuel Filter 32
- Electrical System Maintenance 33
  - Charging the Battery 33
  - Servicing the Fuses 34
- Drive System Maintenance 35
  - Checking the Tire Pressure 35
  - Releasing the Electric Brake 35
- Mower Maintenance 36
  - Servicing the Cutting Blades 36
  - Leveling the Mower Deck 39
  - Removing the Mower 41
  - Mower Belt Maintenance 41
  - Installing the Mower 42
  - Replacing the Grass Deflector 42
- Cleaning 44
  - Washing the Underside of the Mower 44

Storage 45
- Cleaning and Storage 45

Troubleshooting 46
Schematics 48

Safety

This machine meets or exceeds the B71.1-2003 specifications of the American National Standards Institute, in effect at the time of production. However, improper use or maintenance by the operator or owner can result in injury. To reduce the potential for injury, comply with these safety instructions and always pay attention to the safety alert symbol, which means CAUTION, WARNING, or DANGER-"personal safety instruction." Failure to comply with the instruction may result in personal injury or death.

Safe Operating Practices

This product is capable of amputating hands and feet and throwing objects. Always follow all safety instructions to avoid serious injury or death.

The following instructions are from ANSI standard B71.1-2003. All the language within this ANSI standard applies to this machine; however, due to the application of the standard across many different types of products some statements can seem general or misleading. In these instances, Toro has refined the statement to convey the meaning of the standard while better matching the product this *Operator's Manual* pertains. Safety information in addition to the instructions found in the ANSI standard below can be found in Toro Riding Mower Safety at the end of this section.

General Operation

- Read, understand, and follow all instructions in the operator's manual and on the machine before starting.
- Do not place hands or feet near rotating parts or under the machine. Keep clear of the discharge opening at all times.
- Allow only responsible adults who are familiar with the instructions to operate the machine.
- Clear the area of objects such as rocks, toys, wire, etc., which could be picked up and thrown by the blade.
- Be sure the area is clear of other people before mowing. Stop the machine if anyone enters the area.
- Never carry passengers.
- Do not mow in reverse unless absolutely necessary. Always look down and behind before and while backing up.
- Be aware of the mower discharge direction and do not point it at anyone. Avoid discharging material against a wall or obstruction. Material may ricochet back toward the operator. Stop the blade(s) when crossing gravel surfaces.
- Do not operate the machine without deflector, discharge cover or entire grass collection system in place and working.
- Be alert, slow down and use caution when making turns. Look behind and to the side before changing directions.
- Never leave a running machine unattended. Always turn off blades, set parking brake, stop engine, and remove key before dismounting.
- Turn off blades when not mowing. Stop the engine, wait for all parts to come to a complete stop and remove the key before cleaning the machine, removing the grass catcher or unclogging the discharge chute.
- Operate the machine only in daylight or good artificial light.
- Do not operate the machine while under the influence of alcohol or drugs.
- Watch for traffic when operating near or crossing roadways.
- Use extra care when loading or unloading the machine into a trailer or truck.
- Always wear eye protection when operating the mower.
- Data indicates that operators, age 60 years and above, are involved in a large percentage of riding mower-related injuries. Operators should evaluate their ability to operate the riding mower safely enough to protect themselves and others from serious injury.
- Always follow the recommendations for any application of counterweights.
- Lightning can cause severe injury or death. If lightning is seen or thunder is heard in the area, do not operate the machine; seek shelter.

Slope Operation

Slopes are a major factor related to loss of control and tip-over accidents, which can result in severe injury or death. Operation on all slopes requires extra caution. If you cannot back up the slope or if you feel uneasy on it, do not mow it.

- Do not mow slopes greater than 15 degrees.
- Watch for ditches, holes, rocks, dips, and rises that change the operating angle, as rough terrain could overturn the machine.

- Choose a low ground speed so you will not have to stop while operating on a slope.
- Do not mow slopes when grass is wet. Slippery conditions reduce traction and could cause sliding and loss of control.
- Always keep the drive wheels engaged when going down slopes.
- Reduce speed and use extreme caution on slopes.
- Do not make sudden turns or rapid speed changes.
- Remove or mark obstacles such as rocks, tree limbs, etc. from the mowing area. Tall grass can hide obstacles.
- Avoid sudden starts when mowing uphill because the mower may tip backwards.
- Be aware that loss of traction may occur going downhill. Weight transfer to the front wheels may cause drive wheels to slip and cause loss of braking and steering.
- Always avoid sudden starting or stopping on a slope. If tires lose traction, stop the machine, disengage the blades and proceed slowly off the slope.
- Use extreme care with grass catchers or other attachments. These can change the stability of the machine and cause loss of control.
- Do not try to stabilize the machine by putting your foot on the ground.
- Do not mow near drop-offs, ditches, steep banks or water. Wheels dropping over edges can cause rollovers, which may result in serious injury, death or drowning.
- Use a walk behind mower and/or a hand trimmer near drop-offs, ditches, steep banks or water.

Children

Tragic accidents can occur if the operator is not alert to the presence of children. Children are often attracted to the machine and the mowing activity. Never assume that children will remain where you last saw them.

- Keep children out of the mowing area and under the watchful care of another responsible adult, not the operator.
- Be alert and turn the machine off if children enter the area.
- Before and while backing or changing direction, look behind, down, and side-to-side for small children.
- Never carry children, even with the blades off. They may fall off and be seriously injured or interfere with safe machine operation.
- Children who have been given rides in the past may suddenly appear in the mowing area for another ride and be run over or backed over by the mower.
- Never allow children to operate the machine.
- Use extra care when approaching blind corners, shrubs, trees, the end of a fence or other objects that may obscure vision.

Towing

A hitch kit is available for this machine and can be obtained by contacting an Authorized Toro Dealer. Do not tow without first installing this manufacturer approved hitch. The following guidelines apply when towing with the approved hitch kit installed.

- Tow only with a machine that has a hitch designed for towing. Do not attach towed equipment except at the hitch point.
- Follow the manufacturer's recommendation for weight limits for towed equipment and towing on slopes.
- Never allow children or others in or on towed equipment.
- On slopes, the weight of the towed equipment may cause loss of traction and loss of control.
- Travel slowly and allow extra distance to stop.

Service

Safe Handling of Gasoline:

To avoid personal injury or property damage, use extra care when handling gasoline and other fuels. They are flammable and the vapors are explosive.

- Extinguish all cigarettes, cigars, pipes and other sources of ignition.
- Use only an approved container.
- Never remove the gas cap or add fuel when the engine is running. Allow the engine to cool before refueling.
- Never refuel the machine indoors.
- Never store the machine or fuel container inside where there is an open flame, such as near a water heater or furnace.
- Never fill containers inside a vehicle or on a truck or trailer with a plastic liner. Always place containers on the ground away from your vehicle before filling.
- Remove gas-powered equipment from the truck or trailer and refuel it on the ground. If this is not possible, then refuel such equipment with a portable

container, rather than from a gasoline dispenser nozzle.

- Keep the nozzle in contact with the rim of the fuel tank or container opening at all times until the fueling is complete. Do not use a nozzle lock-open device.
- If fuel is spilled on clothing, change clothing immediately.
- Never overfill the fuel tank. Replace gas cap and tighten securely.

General Service:

- Never operate a machine inside a closed area. Engine exhaust contains carbon monoxide, which is an odorless, deadly poison that can kill you.
- Keep nuts and bolts tight, especially the blade attachment bolts. Keep equipment in good condition.
- Never tamper with safety devices. Check their proper operation regularly.
- Keep the machine free of grass, leaves, or other debris build-up. Clean up oil or fuel spillage fuel soaked debris. Allow the machine to cool before storing.
- Stop and inspect the equipment if you strike an object. Repair, if necessary, before restarting.
- Never make any adjustments or repairs with the engine running.
- Grass catcher components are subject to wear, damage and deterioration, which could expose moving parts or allow objects to be thrown. Frequently check components and replace with manufacturers' recommended parts, when necessary.
- Mower blades are sharp and can cut. Wrap the blade(s) or wear gloves, and use extra caution when servicing them.
- Check for proper brake operation frequently. Adjust and service as required.
- Maintain or replace safety and instruction decals as necessary.
- Use only genuine Toro replacement parts to ensure that original standards are maintained.

Toro Riding Mower Safety

The following list contains safety information specific to Toro products or other safety information that you must know that may not be included in the ANSI standards.

- Stop the engine, move the motion control levers to neutral and outward to the park position, disengage the blade control switch, remove key before and disconnect spark plug wire(s) performing any service, repairs, maintenance or adjustments.
- Keep hands, feet, hair, and loose clothing away from attachment discharge area, underside of mower and any moving parts while engine is running.
- Do not touch equipment or attachment parts which may be hot from operation. Allow to cool before attempting to maintain, adjust or service.
- Battery acid is poisonous and can cause burns. Avoid contact with skin, eyes, and clothing. Protect your face, eyes, and clothing when working with a battery.
- Battery gases can explode. Keep cigarettes, sparks and flames away from battery.
- Use only Toro approved attachments. Warranty may be voided if used with unapproved attachments.
- If loading the machine onto a trailer or truck, use a single, full-width ramp only. The ramp angle should not exceed 15 degrees.

Slope Indicator

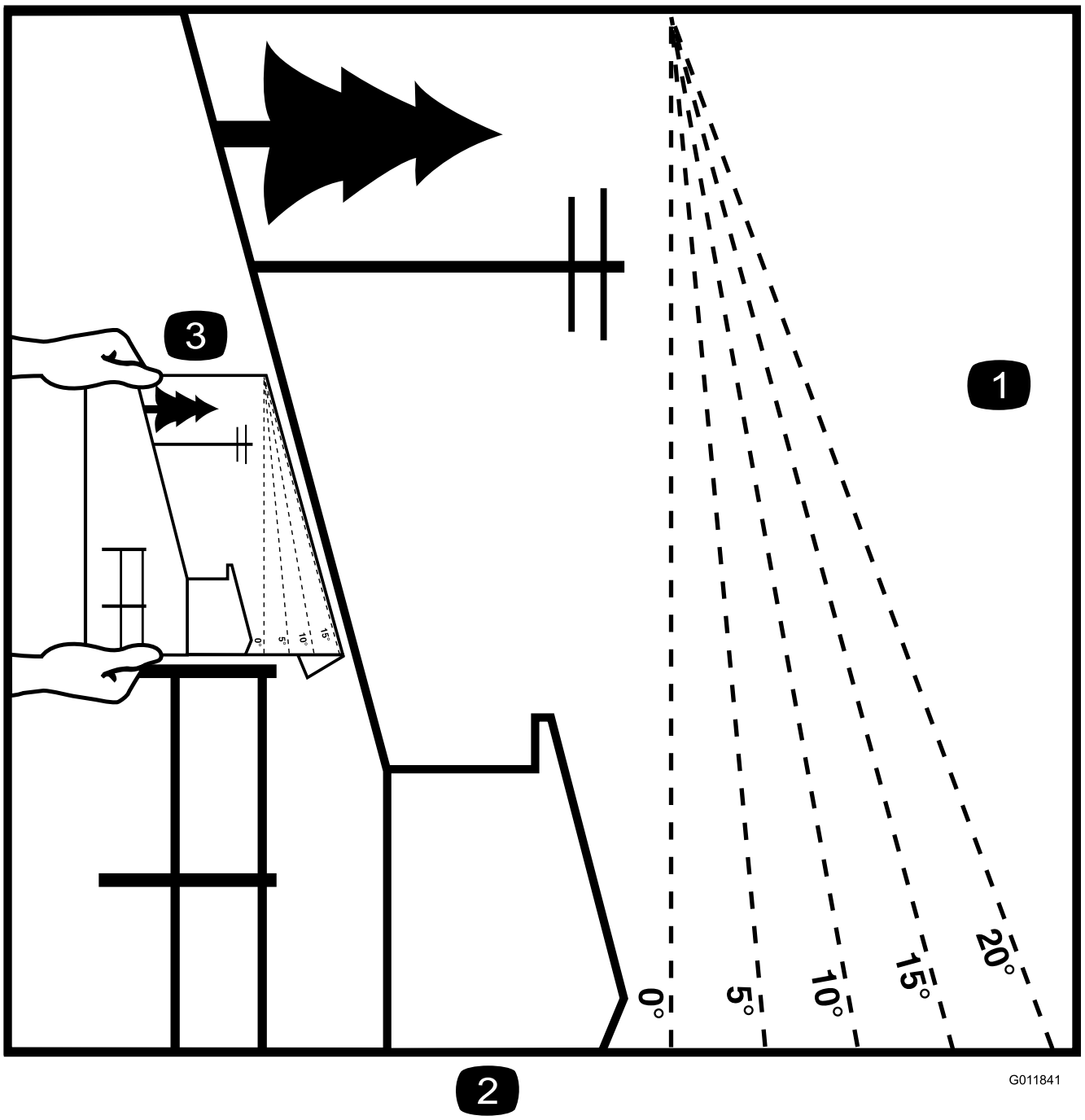

Figure 3

This page may be copied for personal use.

1. The maximum slope you can safely operate the machine on is **15 degrees**. Use the slope chart to determine the degree of slope of hills before operating. **Do not operate this machine on a slope greater than 15 degrees.** Fold along the appropriate line to match the recommended slope.
2. Align this edge with a vertical surface, a tree, building, fence pole, etc.
3. Example of how to compare slope with folded edge.

Safety and Instructional Decals

Safety decals and instructions are easily visible to the operator and are located near any area of potential danger. Replace any decal that is damaged or lost.

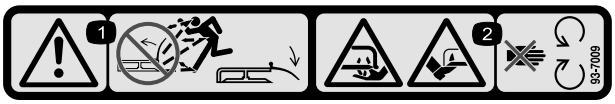

93-7009

1. Warning—don't operate the mower with the deflector up or removed; keep the deflector in place.
2. Cutting/dismemberment hazard of hand or foot, mower blade—stay away from moving parts.

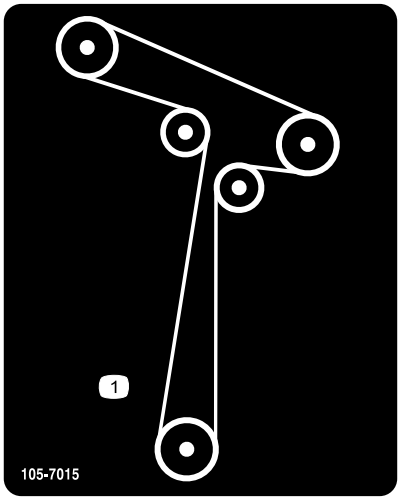

105-7015

For Models with 42 Inch Decks

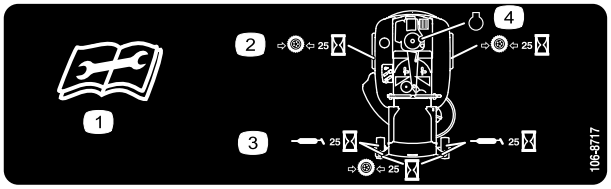

106-8717

1. Read the instructions before servicing or performing maintenance.
2. Check tire pressure every 25 operating hours.
3. Grease every 25 operating hours.
4. Engine



110-6691

1. Thrown object hazard—keep bystanders a safe distance from the machine.
2. Thrown object hazard, mower—do not operate without the deflector, discharge cover, or grass collection system in place.
3. Cutting/dismemberment of hand or foot—stay away from moving parts.

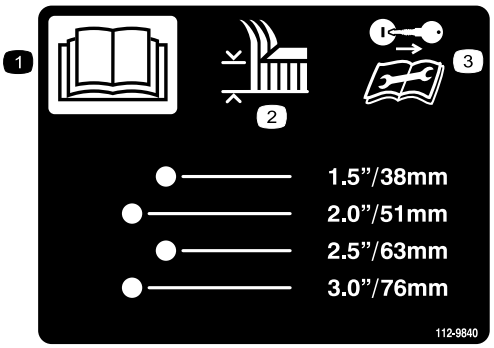

112-9840

1. Read the *Operator's Manual*.
2. Height of cut
3. Remove the ignition key and read the instructions before servicing or performing maintenance.

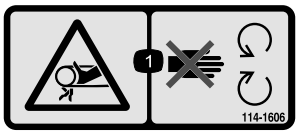

114-1606

1. Entanglement hazard, belt—keep all guards in place.

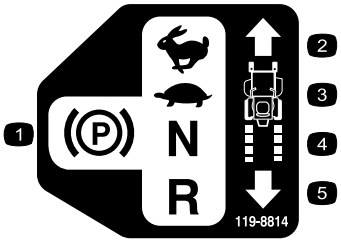

119-8814

1. Parking position
2. Fast
3. Slow
4. Neutral
5. Reverse

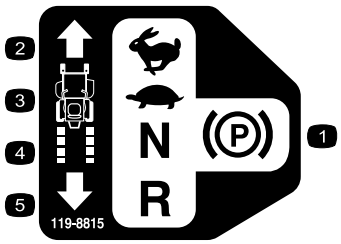

119-8815

1. Parking position
2. Fast
3. Slow
4. Neutral
5. Reverse

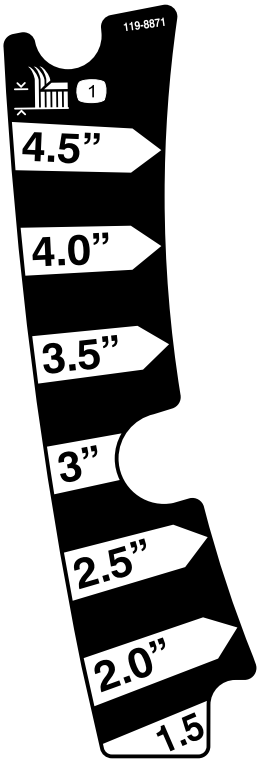

119-8871

Certain models only

1. Height-of-cut

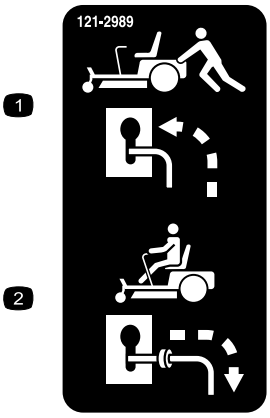

121-2989

1. Bypass lever position for pushing the machine
2. Bypass lever position for operating the machine

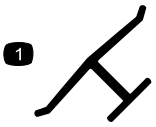

Manufacturer's Mark

1. Indicates the blade is identified as a part from the original machine manufacturer.



Battery Symbols

Some or all of these symbols are on your battery

1. Explosion hazard
2. No fire, open flame, or smoking.
3. Caustic liquid/chemical burn hazard
4. Wear eye protection
5. Read the *Operator's Manual.*
6. Keep bystandersa safe distance from the battery.
7. Wear eye protection; explosive gases can cause blindness and other injuries
8. Battery acid can cause blindness or severe burns.
9. Flush eyes immediately with water and get medical help fast.
10. Contains lead; do not discard.

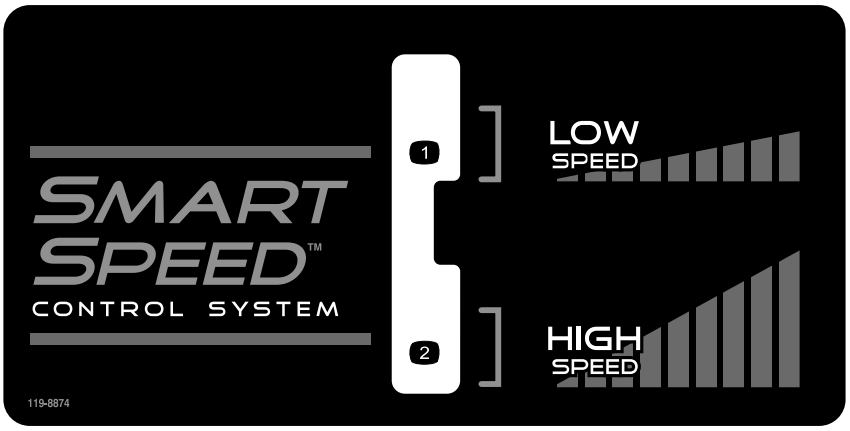

119-8874

1. Low speed
2. High speed

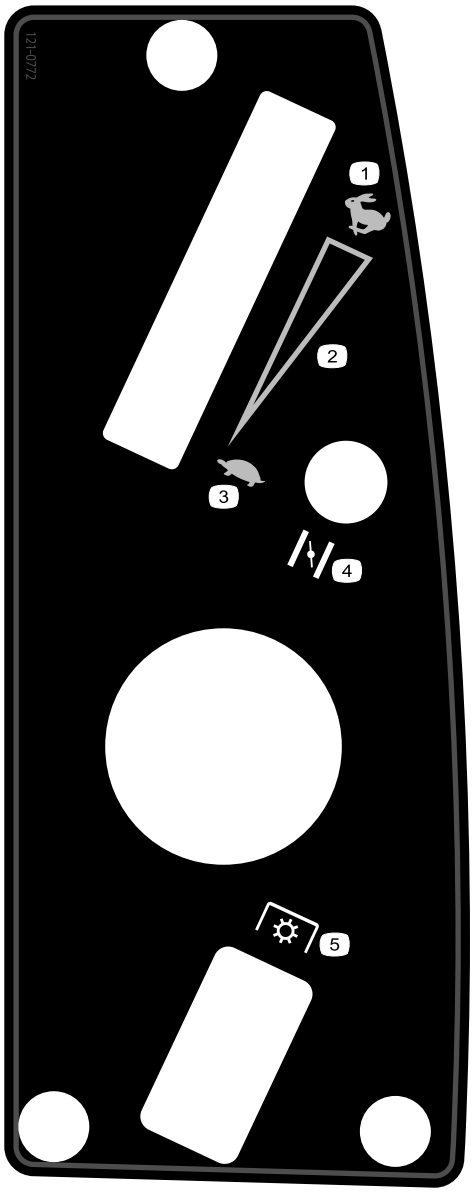

121-0772

1. Fast
2. Continuous variable setting
3. Slow
4. Choke
5. Power take-off (PTO), Blade control switch

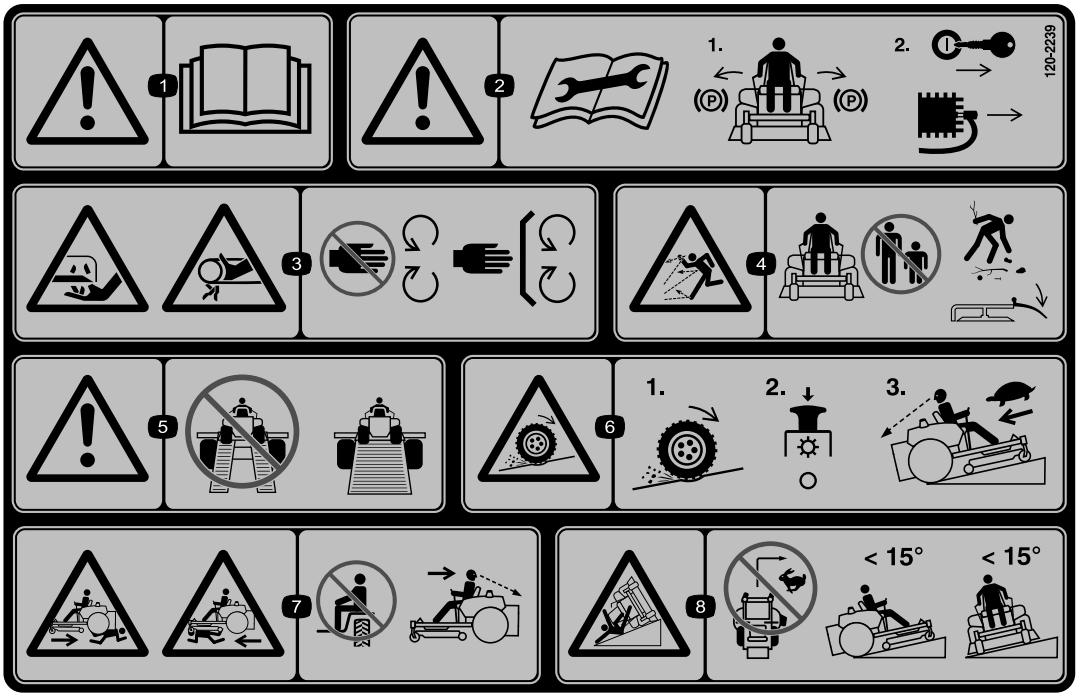

120-2239

1. Warning—read the *Operator's Manual*.
2. Warning—read the instructions before servicing or performing maintenance; move the motion control levers to the park (brake) position, remove the ignition key and disconnect the spark plug wire.
3. Cutting/dismemberment hazard, mower blade; entanglement hazard, belt—stay away from moving parts, keep all guards and shields in place.
4. Thrown object hazard—keep bystanders a safe distance from the machine, pick up debris before operating, keep deflector in place.
5. Warning—do not use split ramps, use a full ramps when transporting machine.
6. Loss of traction/control hazard, slopes—loss of traction/control on a slope, disengage the blade control switch (PTO), proceed off the slope slowly.
7. Crushing/dismemberment hazard of bystanders, reversing; crushing/dismemberment hazard of bystanders—do not carry passengers, look behind and down when reversing.
8. Tipping hazard—do not mow slopes greater than 15 degrees, avoid sudden and sharp turns while on slopes.

Product Overview

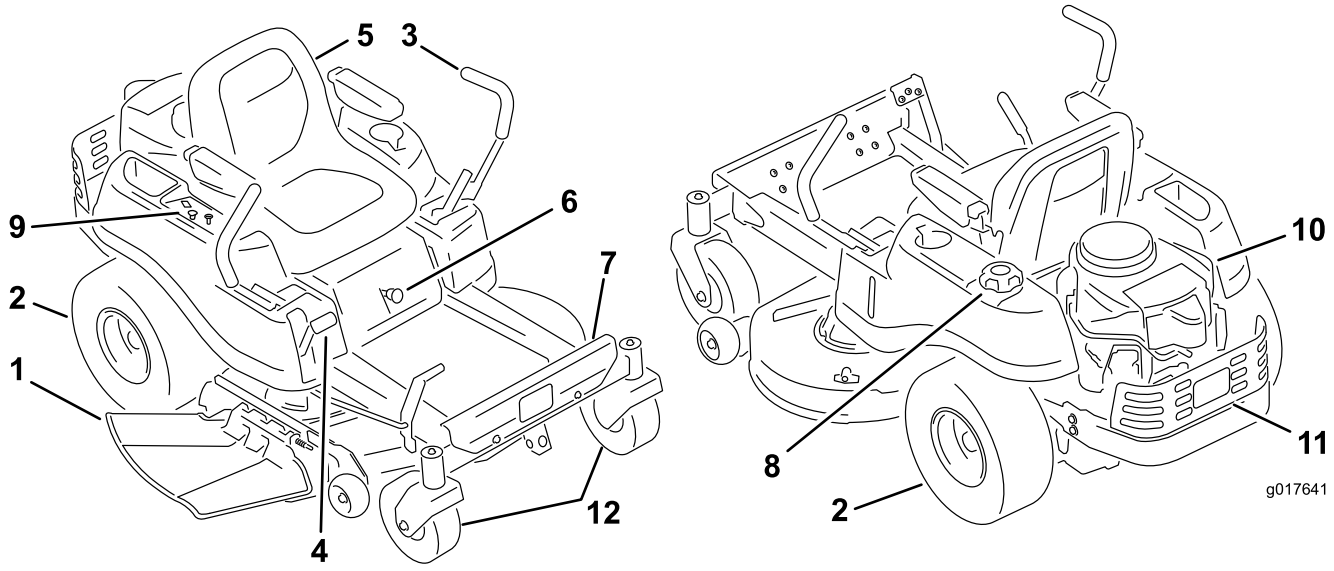

Figure 4

1. Deflector	4. Height of cut lever	7. Footrest	10. Engine
2. Rear drive wheel	5. Operator seat	8. Fuel tank cap	11. Engine guard (certain models only)
3. Motion control levers	6. Smart Speed™ lever	9. Control panel	12. Front caster wheel

Controls

Become familiar with all of the controls in Figure 4 and Figure 5 before you start the engine and operate the machine.

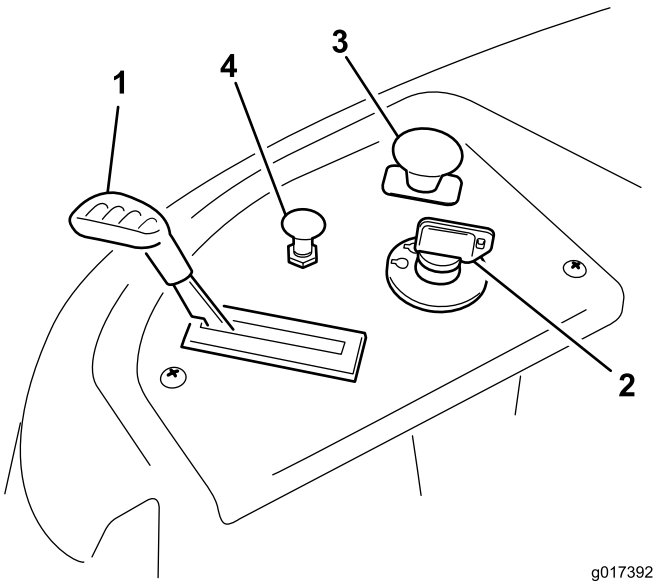

Figure 5
Control Panel

1. Throttle
2. Ignition switch
3. Blade control switch (power take-off)
4. Choke

Ignition Switch

The ignition switch has three positions, Off, Run and Start. The key will turn to Start and move back to Run upon release. Turning the key to the Off position will stop the engine; however, always remove the key when leaving the machine to prevent someone from accidentally starting the engine (Figure 5).

Throttle Control

The throttle controls the engine speed and it has a continuous variable setting from Slow to Fast (Figure 5).

Choke Control

Pull up on the Choke control until it stops to choke the engine (Figure 5). Push down on the Choke control for normal engine operation

Blade Control Switch (Power Take-Off)

The blade control switch, represented by a power take-off (PTO) symbol, engages and disengages power to the mower blades (Figure 5).

Motion Control Levers and Parking Brake Position

The motion control levers are speed sensitive controls of independent wheel motors. Moving a lever forward or backward turns the wheel on the same side forward or in reverse; wheel speed is proportional to the amount the lever is moved. Move the control levers outward from the center to the park position and exit the machine (Figure 17). Always position the motion control levers into the park position when you stop the machine or leave it unattended.

Smart Speed™ Control System Lever

The Smart Speed™ Control System lever, located below the operating position, gives the operator a choice to drive the machine at two speed ranges, high and low (Figure 6).

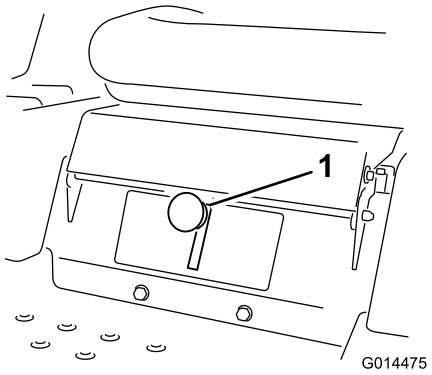

Figure 6

1. Smart speed lever

Fuel Window

The fuel window located on the left hand side of the machine can be used to verify the presence of gasoline in the tank (Figure 7).

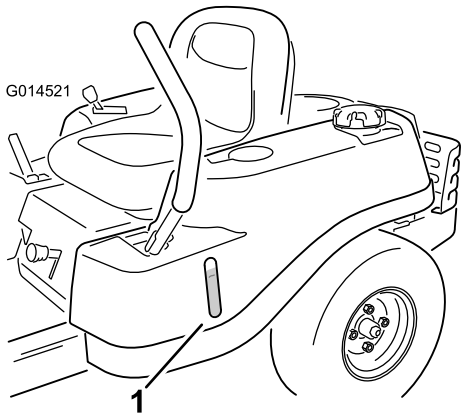

Figure 7

1. Fuel presence window

Height-of-Cut Lever

The height of cut lever allows the operator to lower and raise the deck from the seated position. When the lever is moved up, toward the operator the deck is raised from the ground and when moved down, away from the operator it is lowered toward the ground. Only adjust the height of cut while machine is not moving (Figure 4).

Hour Meter

The hour meter records the number of hours when the operator is in the seat and the ignition switch is in the ON position (Figure 8).

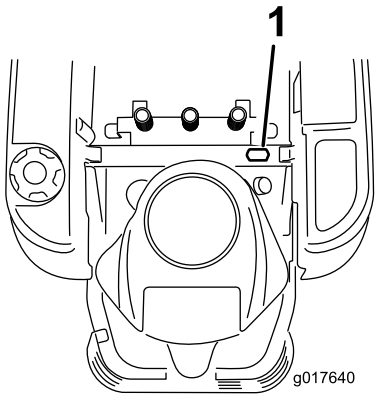

Figure 8

1. Hour meter location behind the seat

Operation

Note: Determine the left and right sides of the machine from the normal operating position.

Think Safety First

Operating Safety

Please carefully read all of the safety instructions and decals in the safety section. Knowing this information could help you, your family, pets or bystanders avoid injury.

⚠ DANGER

Mowing on wet grass or steep slopes can cause sliding and loss of control.

Wheels dropping over edges can cause rollovers, which may result in serious injury, death or drowning.

A loss of traction is a loss of steering control.

To avoid loss of control and possibility of rollover:

- **Do not mow near drop-offs or near water.**
- **Do not mow slopes greater than 15 degrees.**
- **Reduce speed and use extreme caution on slopes.**
- **When mowing slopes, gradually work from lower to higher areas on the incline.**
- **Avoid sudden turns or rapid speed changes.**
- **Turn up, into an incline when changing directions on slopes. Turning down the slope reduces traction.**
- **Attachments change the handling characteristics of the machine. Use extra caution when using attachments with the machine.**

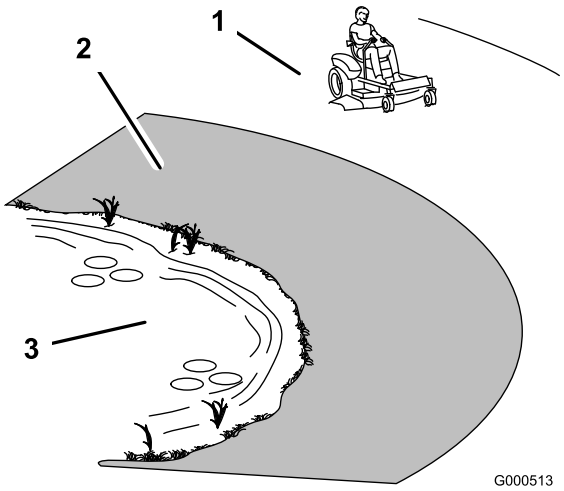

Figure 9

1. Safe Zone-use the TimeCutter here
2. Use walk behind mower and/or hand trimmer near drop-offs and water.
3. Water

Fuel Safety

⚠ DANGER

In certain conditions, gasoline is extremely flammable and highly explosive. A fire or explosion from gasoline can burn you and others and can damage property.

- **Fill the fuel tank outdoors, in an open area, when the engine is cold. Wipe up any gasoline that spills.**
- **Never fill the fuel tank inside an enclosed trailer.**
- **Do not fill the fuel tank completely full. Add gasoline to the fuel tank until the fuel reaches the base of the filler neck. This empty space in the tank allows gasoline to expand.**
- **Never smoke when handling gasoline, and stay away from an open flame or where gasoline fumes may be ignited by a spark.**
- **Store gasoline in an approved container and keep it out of the reach of children. Never buy more than a 30-day supply of gasoline.**
- **Do not operate without entire exhaust system in place and in proper working condition.**

⚠ DANGER

In certain conditions during fueling, static electricity can be released causing a spark which can ignite the gasoline vapors. A fire or explosion from gasoline can burn you and others and can damage property.

- **Always place gasoline containers on the ground away from your vehicle before filling.**
- **Do not fill gasoline containers inside a vehicle or on a truck or trailer bed because interior carpets or plastic truck bed liners may insulate the container and slow the loss of any static charge.**
- **When practical, remove gas-powered equipment from the truck or trailer and refuel the equipment with its wheels on the ground.**
- **If this is not possible, then refuel such equipment on a truck or trailer from a portable container, rather than from a gasoline dispenser nozzle.**
- **If a gasoline dispenser nozzle must be used, keep the nozzle in contact with the rim of the fuel tank or container opening at all times until fueling is complete.**

⚠ WARNING

Gasoline is harmful or fatal if swallowed. Long-term exposure to vapors can cause serious injury and illness.

- **Avoid prolonged breathing of vapors.**
- **Keep face away from nozzle and gas tank or conditioner opening.**
- **Keep gas away from eyes and skin.**

Understanding the Safety Interlock System

⚠ WARNING

If safety interlock switches are disconnected or damaged the machine could operate unexpectedly causing personal injury.

- **Do not tamper with the interlock switches.**
- **Check the operation of the interlock switches daily and replace any damaged switches before operating the machine.**

The safety interlock system is designed to prevent the engine from starting unless:

- The blades are disengaged.
- The motion control levers are in the park position.

The safety interlock system also is designed to stop the engine whenever the control levers are out of the park position and you rise from the seat.

Before Starting

Recommended Fuel

- For best results, use only clean, fresh, unleaded gasoline with an octane rating of 87 or higher ((R+M)/2 rating method).
- Oxygenated fuel with up to 10% ethanol or 15% MTBE by volume is acceptable.
- **Do Not** use ethanol blends of gasoline (such as E15 or E85) with more than 10% ethanol by volume. Performance problems and/or engine damage may result which may not be covered under warranty.
- **Do Not** use gasoline containing methanol.
- **Do Not** store fuel either in the fuel tank or fuel containers over the winter unless a fuel stabilizer is used.
- **Do Not** add oil to gasoline.

Using Stabilizer/Conditioner

Use a fuel stabilizer/conditioner in the machine to provide the following benefits:

- Keeps gasoline fresh during storage of 90 days or less. For longer storage it is recommended that the fuel tank be drained.
- Cleans the engine while it runs.
- Eliminates gum-like varnish buildup in the fuel system, which causes hard starting.

Add the correct amount of gas stabilizer/conditioner to the gas.

Note: A fuel stabilizer/conditioner is most effective when mixed with fresh gasoline. To minimize the chance of varnish deposits in the fuel system, use fuel stabilizer at all times.

Filling the Fuel Tank

Make sure the engine is shut off and the motion controls are in the park position. Tank maximum capacity is 2.9 gallons.

Important: Do Not overfill fuel tank. Fill the fuel tank to the bottom of the filler neck. The empty space in the tank allows the fuel to expand. Overfilling may result in fuel leakage or damage to the engine or emission system.

1. Clean around the fuel tank cap and remove the cap.

   Note: You can use the fuel window to verify the presence of gasoline before filling the tank (Figure 10).

2. **Slowly** add regular, unleaded gasoline until the fuel reaches the base of the filler neck (Figure 10).

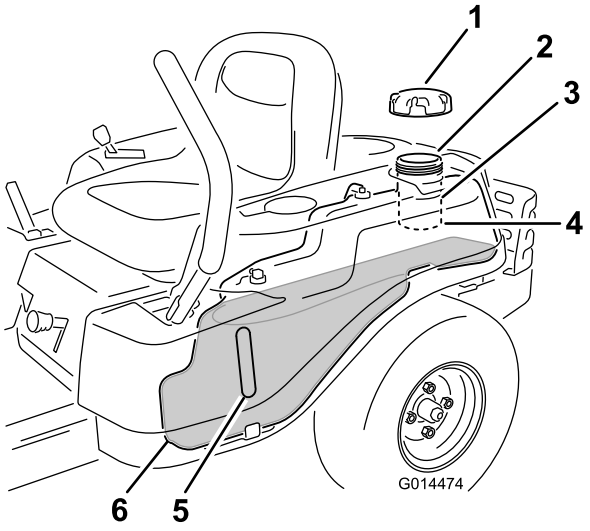

Figure 10

1. Fuel tank cap
2. Fill opening
3. Filler neck
4. Base of filler neck, **DO NOT FILL PAST HERE**
5. Fuel window

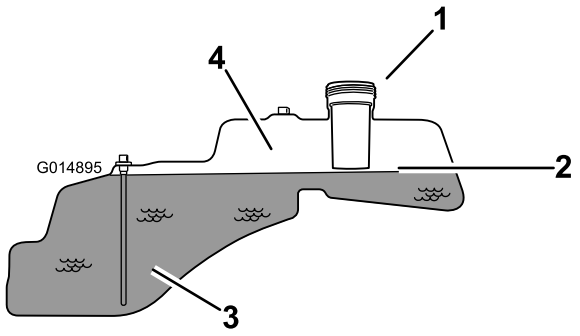

Figure 11

1. Fill opening
2. Base of filler neck, **DO NOT FILL PAST HERE**
3. Fuel
4. Empty space for fuel expansion.

3. Install the fuel tank cap securely and tighten until it "clicks". Wipe up any gasoline that may have spilled.

Checking the Engine Oil Level

Before you start the engine and use the machine, check the oil level in the engine crankcase; refer to Checking the Oil Level in the Engine Maintenance section.

Starting the Engine

1. Sit down on the seat and move the motion controls outward to the park position.
2. Move the throttle control to fast (Figure 12).
3. Disengage the blades by moving the blade control switch to Off (Figure 12)

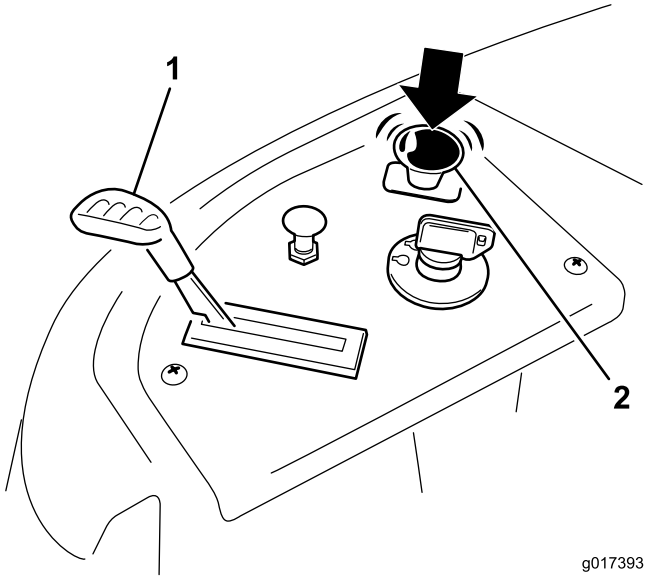

Figure 12

1. Throttle
2. Blade control switch—Off position

4. Pull up on the Choke control before starting a cold engine (Figure 13).

   Note: A warm or hot engine may not require choking.

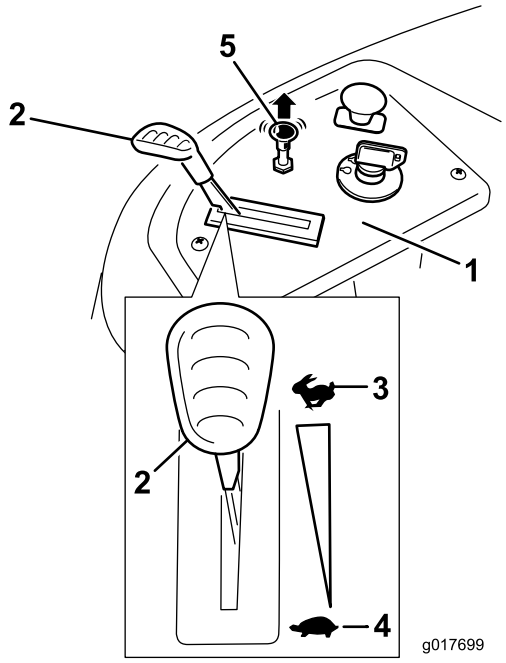

Figure 13

1. Control panel
2. Throttle
3. Fast
4. Slow
5. Choke control

5. Turn the ignition key to Start to energize the starter. When the engine starts, release the key (Figure 14).

   Important: Do not engage the starter for more than 10 seconds at a time. If the engine fails to start, allow a 60 second cool-down period between attempts. Failure to follow these instructions can damage the starter motor.

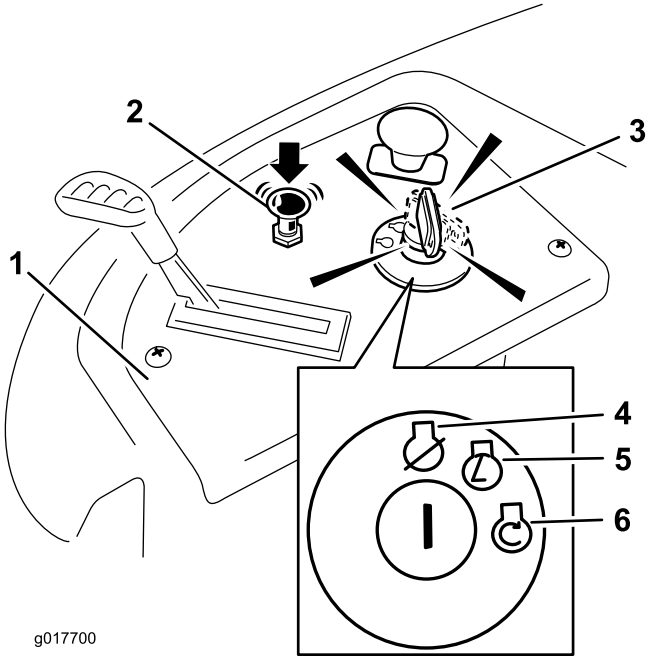

Figure 14

1. Control panel
2. Choke control
3. Ignition key
4. Off
5. Run
6. Start

6. After the engine starts, push down on the Choke control (Figure 14). If the engine stalls or hesitates, pull up on the Choke control and let the engine run for a few seconds. Then push down on the Choke control. Repeat this as required.

Operating the Blades

The blade control switch, represented by a power take-off (PTO) symbol, engages and disengages power to the mower blades. This switch controls power to any attachments that draw power from the engine, including the mower deck and cutting blades.

Engaging the Blades

Important: Do not engage the blades when parked in tall grass. Belt or clutch damage can occur.

1. Release pressure on the motion control levers and place the machine in neutral.
2. Move the throttle to the Fast position.

   Note: Always engage the blades with the throttle in the Fast position.
3. Pull up on the blade control switch to move it to the On position and engage the blades (Figure 15).

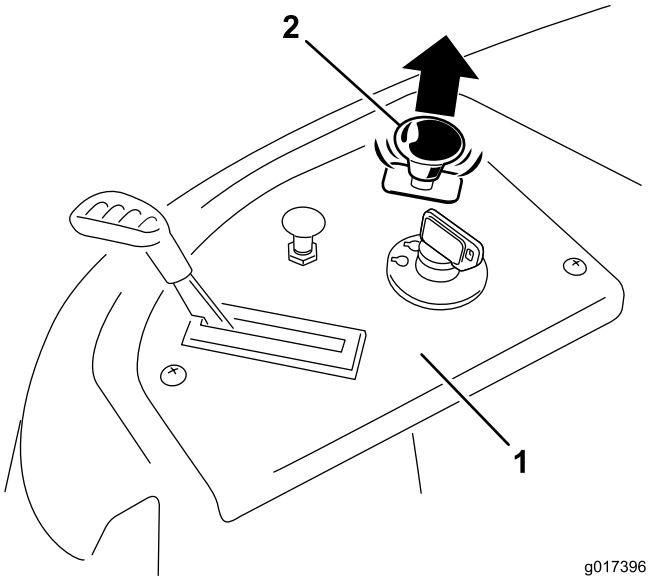

Figure 15

1. Control panel
2. Blade control switch—On position

Disengaging the Blades

Push down on the blade control switch to move it to the Off position and disengage the blades (Figure 16).

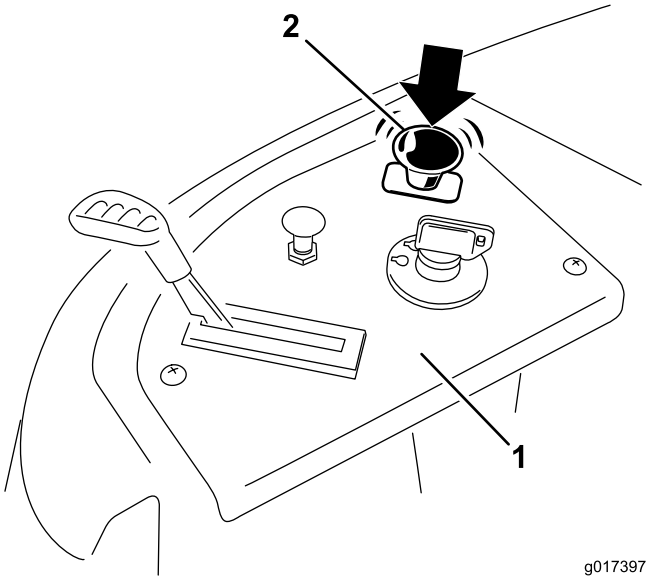

Figure 16

1. Control panel
2. Blade control switch—Off

Testing the Safety Interlock System

Test the safety interlock system before you use the machine each time. If the safety system does not

operate as described below, have an Authorized Service Dealer repair the safety system immediately.

1. While sitting on the seat, with the control levers in park position, and move the blade control switch to On. Try starting the engine; the engine should not crank.
2. While sitting on the seat, move the blade control switch to Off. Move either motion control lever to the center, unlocked position. Try starting the engine; the engine should not crank. Repeat with the other motion control lever.
3. While sitting on the seat, move the blade control switch to Off, and lock the motion control levers in the park position. Start the engine. While the engine is running, engage the blade control switch, and rise slightly from the seat; the engine should stop.
4. While sitting on the seat, move the blade control switch to Off, and lock the motion control levers in the park position. Start the engine. While the engine is running, move the motion control levers to the center, unlocked position, engage the blade control switch, and rise slightly from the seat; the engine should stop.

Stopping the Engine

1. Disengage the blades by moving the blade control switch to Off (Figure 16).
2. Move the throttle lever to between the Fast position (Figure 13).
3. Turn the ignition key to Off (Figure 14) and remove the key.

Driving

Driving the machine benefits from an understanding of what zero turn radius mower means. The drive wheels turn independently, powered by hydraulic motors on each axle; hence one side can turn in reverse while the other turns forward causing the machine to spin rather than turn. This vastly improves the machine maneuverability but may require some adjustment if the operator is unfamiliar.

⚠ WARNING

The machine can spin very rapidly. The operator may lose control of the machine and cause personal injury or damage to the machine.

- **Use caution when making turns.**
- **Slow the machine down before making sharp turns.**

The throttle control regulates the engine speed as measured in rpm (revolutions per minute). Placing the throttle control in the Fast position can be best for performance. For most applications, operating in the full throttle position is desirable.

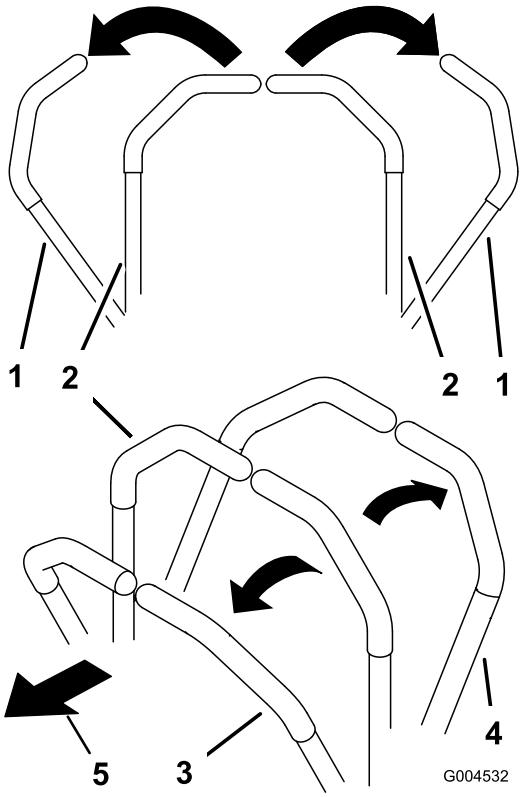

Figure 17

1. Park (brake) position
2. Center unlock position
3. Forward
4. Backward
5. Front of machine

Using the Smart Speed™ Control System

The Smart Speed™ Control System lever, located below the operating position (Figure 18), gives the operator a choice to drive the machine at two ground speed ranges, high and low.

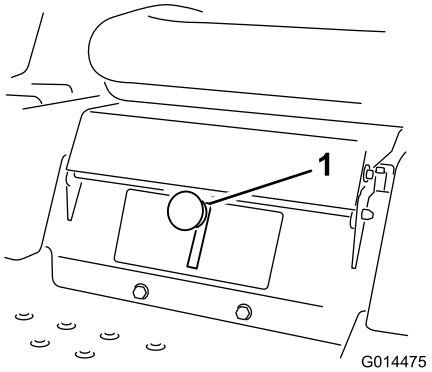

Figure 18

1. Smart speed lever

To change speeds:

1. Move the motion control levers to neutral and outward to the park position; disengage the blade control switch.

   ⚠ WARNING

   Removing your hands from the motion control levers while the machine is in motion can result in a loss of control causing harm to you or bystanders.

   Always stop the machine and move the motion control levers to the park position before adjusting the Smart Speed™ Control System.

2. Adjust the lever to the desired position.

Forward

1. Move the levers to the center, unlocked position.
2. To go forward, slowly push the motion control levers forward (Figure 17).

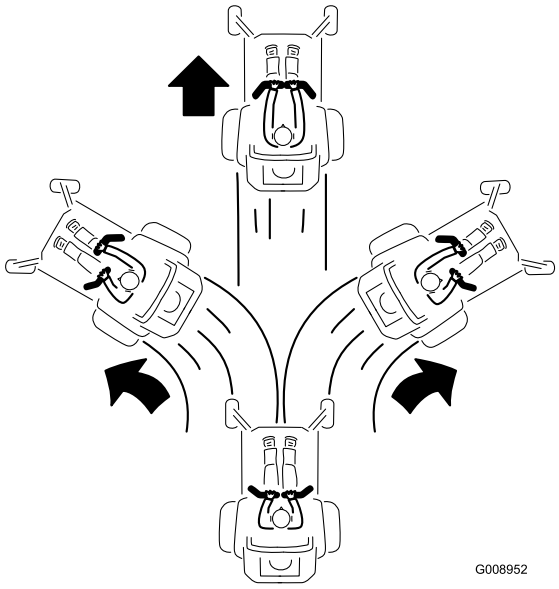

Figure 19

To go straight, apply equal pressure to both motion control levers (Figure 19).

To turn, release pressure on the motion control lever toward the direction you want to turn (Figure 19).

The farther you move the motion control levers in either direction, the faster the machine will move in that direction.

To stop, pull the motion control levers to neutral.

Backward

1. Move the levers to the center, unlocked position.
2. To go backward, look behind you and down as you slowly pull the motion control levers rearward (Figure 20).

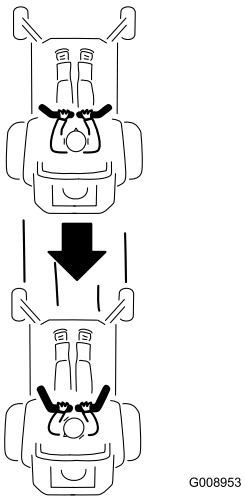

Figure 20

To go straight, apply equal pressure to both motion control levers (Figure 20).

To turn, release the pressure on the motion control lever toward the direction you want to turn.

To stop, push the motion control levers to neutral.

Stopping the Machine

To stop the machine, move the motion control levers to neutral and outward to the park position, disengage the blade control switch, ensure the throttle is in the fast position, and turn the ignition key to Off. Remember to remove the key from the ignition switch.

⚠ WARNING

Children or bystanders may be injured if they move or attempt to operate the mower while it is unattended.

Always remove the ignition key and move the motion control levers outward to the park position when leaving the machine unattended, even if just for a few minutes.

Adjusting the Height of Cut

Height-of-cut is controlled by the lever located to the right of the operating position (Figure 21).

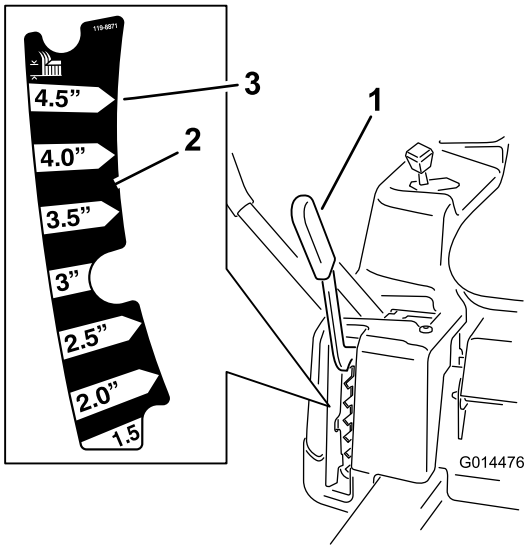

Figure 21

1. Height-of-cut lever
2. Height-of-cut positions
3. 4.5 inch (115 mm), Transport position

1. Pull up and inward on the lever to move it to the desired cutting position.
2. Once at the desired cutting position, slowly lower the lever until it engages the position.

The transport position is the highest height-of-cut position or cutting height **4.5** inch [115 mm] (Figure 21).

Positioning the Seat

1. Raise the seat and loosen the adjustment bolts just enough that seat can move (Figure 22).

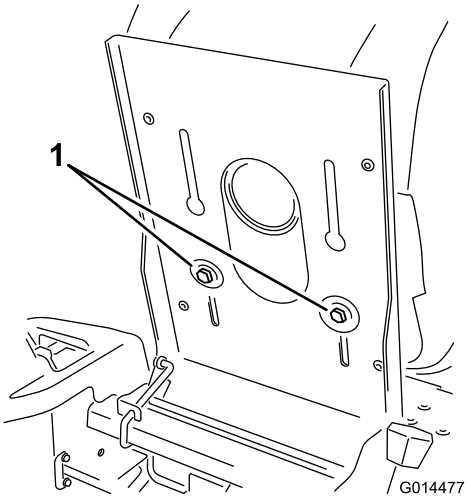

Figure 22

1. Adjustment bolt

2. Move the seat to the desired position and tighten the bolts.

Adjusting the Motion Control Levers

Adjusting the Height

The motion control levers can be adjusted higher or lower for maximum operator comfort.

1. Remove the 2 bolts holding the control lever to the control arm shaft (Figure 23).
2. Move the control lever to the next set of holes. Secure the lever with the 2 bolts (Figure 23).

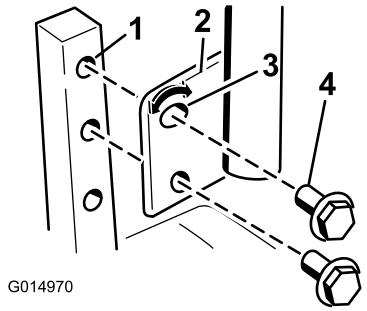

Figure 23

1. Control arm shaft
2. Control lever
3. Slotted, upper hole
4. Bolt

3. Repeat the adjustment for the opposite control lever.

Adjusting the Tilt

The motion control levers can be tilted fore or aft for maximum operator comfort.

1. Loosen the upper bolt holding the control lever to the control arm shaft.
2. Loosen the lower bolt just enough to pivot the control lever fore or aft (Figure 23). Tighten both bolts to secure the control in the new position.
3. Repeat the adjustment for the opposite control lever.

Pushing the Machine by Hand

Important: Always push the machine by hand. Never tow the machine because damage may occur.

This machine has an electric brake mechanism and to push the machine the ignition key needs to be in the Run position. The battery needs to be charged and functioning for the electric brake to be disengage.

To Push the Machine

1. Park the machine on a level surface and disengage the blade control switch.
2. Move the motion control levers outward to park position, stop the engine, and wait for all moving parts to stop before leaving the operating position.
3. Locate the bypass levers on the frame on both sides of the engine.
4. Move the bypass levers forward through the key hole and down to lock them in place as shown in Figure 24 . Ensure this is done for each lever.
5. Move the motion control levers inward to the neutral position and turn the ignition key to the run position. Do not start the machine.

   The machine is now able to be pushed by hand.

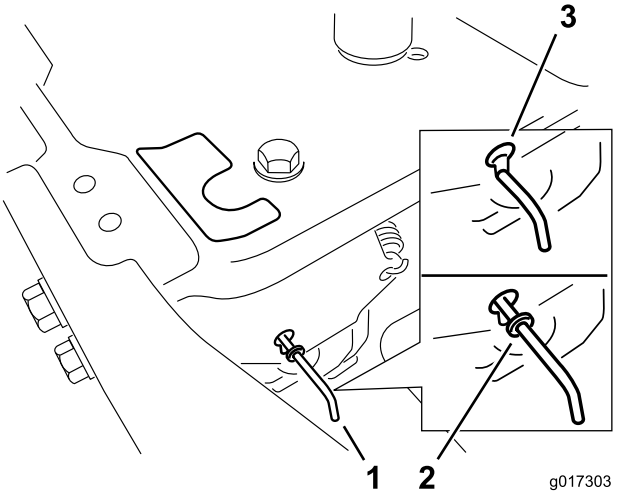

Figure 24

1. Bypass lever location
2. Lever position for operating the machine
3. Lever position for pushing the machine

6. When finished, ensure the key has been returned to the Stop position to avoid draining the battery charge.

If the machine fails to move the electric brake may still be engaged. If necessary the electric brake can be released manually. Refer to the Releasing the Electric Brake (page 35) procedure in Drive Maintenance.

To Operate the Machine

Move the bypass levers rearward through the key hole and down to lock them in place as shown in Figure 24. Ensure this is done for each lever.

Grass Deflector

The mower has a hinged grass deflector that disperses clippings to the side and down toward the turf.

⚠ DANGER

Without the grass deflector, discharge cover, or complete grass catcher assembly mounted in place, you and others are exposed to blade contact and thrown debris. Contact with rotating mower blade(s) and thrown debris will cause injury or death.

- **Never remove the grass deflector from the mower because the grass deflector routes material down toward the turf. If the grass deflector is ever damaged, replace it immediately.**
- **Never put your hands or feet under the mower.**
- **Never try to clear discharge area or mower blades unless you move the blade control switch to Off and rotate the ignition key to Off. Also remove the key and pull the wire off the spark plug(s).**

Operating Tips

Fast Throttle Setting

For best mowing and maximum air circulation, operate the engine at the Fast position. Air is required to thoroughly cut grass clippings, so do not set the height-of-cut so low as to totally surround the mower by uncut grass. Always try to have one side of the mower free from uncut grass, which allows air to be drawn into the mower.

Using the Smart Speed™ Control System

The Smart Speed™ Control System lever, located below the operating position, gives the operator a choice to drive the machine at two speed ranges, high and low. An operator can benefit from the lower speed setting when maneuvering the machine in tight spaces or operating around delicate landscapes. The low setting can also be used to operate the machine at a high throttle setting and blade speed while still being able to reduce ground speed to increase quality of cut.

Cutting a Lawn for the First Time

Cut grass slightly longer than normal to ensure that the cutting height of the mower does not scalp any uneven ground. However, the cutting height used in the past is generally the best one to use. When cutting grass longer than six inches tall, you may want to cut the lawn twice to ensure an acceptable quality of cut.

Cut 1/3 of the Grass Blade

It is best to cut only about 1/3 of the grass blade. Cutting more than that is not recommended unless grass is sparse, or it is late fall when grass grows more slowly.

Mowing Direction

Alternate mowing direction to keep the grass standing straight. This also helps disperse clippings which enhances decomposition and fertilization.

Mow at Correct Intervals

Normally, mow every four days. But remember, grass grows at different rates at different times. So to maintain the same cutting height, which is a good practice, mow more often in early spring. As the grass growth rate slows in mid summer, mow less frequently. If you cannot mow for an extended period, first mow at a high cutting height; then mow again two days later at a lower height setting.

Avoid Cutting Too Low

If the cutting width of the mower is wider than the mower you previously used, raise the cutting height to ensure that uneven turf is not cut too short.

Long Grass

If the grass is ever allowed to grow slightly longer than normal, or if it contains a high degree of moisture, raise the cutting height higher than usual and cut the grass at this setting. Then cut the grass again using the lower, normal setting.

When Stopping

If the machine's forward motion must be stopped while mowing, a clump of grass clippings may drop onto your lawn. To avoid this, move onto a previously cut area with the blades engaged.

Keep the Underside of the Mower Clean

Clean clippings and dirt from the underside of the mower after each use. If grass and dirt build up inside the mower, cutting quality will eventually become unsatisfactory.

Blade Maintenance

Maintain a sharp blade throughout the cutting season because a sharp blade cuts cleanly without tearing or

shredding the grass blades. Tearing and shredding turns grass brown at the edges, which slows growth and increases the chance of disease. Check the cutter blades daily for sharpness, and for any wear or damage. File down any nicks and sharpen the blades as necessary. If a blade is damaged or worn, replace it immediately with a genuine Toro replacement blade.

Maintenance

Note: Determine the left and right sides of the machine from the normal operating position.

Recommended Maintenance Schedule(s)

Maintenance Service Interval	Maintenance Procedure
After the first 8 hours	• Change the engine oil.
Before each use or daily	• Check the safety interlock system. • Check the engine oil level. • Clean the air intake screen. • Check the cutting blades. • Inspect the grass deflector for damage • Clean the mower housing.
Every 25 hours	• Grease all lubrication points. • Check tire pressure. • Check the belts for wear/cracks.
Every 100 hours	• Service the paper element. (more often in dusty, dirty conditions) • Change the engine oil. (more often in dusty, dirty conditions) • Check the spark plug(s). • Replace the in-line fuel filter
Every 200 hours	• Replace the paper element. (more often in dusty, dirty conditions) • Change the oil filter. (more often in dusty, dirty conditions)
Before storage	• Charge the battery and disconnect battery cables. • Perform all maintenance procedures listed above before storage. • Paint any chipped surfaces.

Important: **Refer to your engine operator's manual for additional maintenance procedures.**

⚠ CAUTION

If you leave the key in the ignition switch, someone could accidently start the engine and seriously injure you or other bystanders.

Remove the key from the ignition and disconnect the wire from the spark plug before you do any maintenance. Set the wire aside so that it does not accidentally contact the spark plug.

Premaintenance Procedures

Raising the Seat

Make sure the motion control levers are locked in the park position. Lift the seat forward.

The following components can be accessed by raising the seat:

- Serial plate
- Service decal
- Seat adjustment bolts
- Fuel filter
- Battery and battery cables

Lubrication

Greasing the Bearings

Service Interval: Every 25 hours—Grease all lubrication points.

Grease Type: No. 2 General Purpose Lithium Base Grease

1. Park the machine on a level surface and disengage the blade control switch.
2. Move the motion control levers outward to the park position, stop the engine, remove the key, and wait for all moving parts to stop before leaving the operating position.
3. Clean the grease fittings (Figure 25 and Figure 26) with a rag. Make sure to scrape any paint off of the front of the fitting(s).

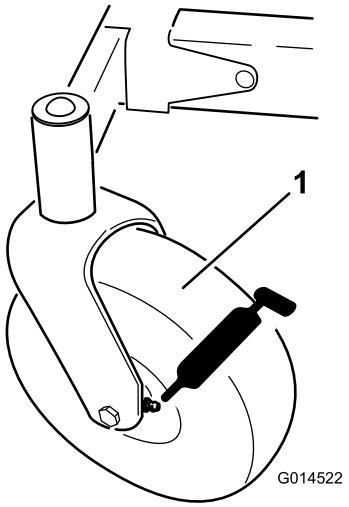

Figure 25

1. Front caster tire

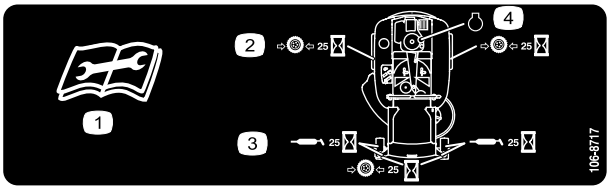

Figure 26

Located on the seat pan underside

1. Read the instructions before servicing or performing maintenance.
2. Check tire pressure every 25 operating hours.
3. Grease every 25 operating hours.
4. Engine

4. Connect a grease gun to each fitting (Figure 25 and Figure 26). Pump grease into the fittings until grease begins to ooze out of the bearings.
5. Wipe up any excess grease.

Engine Maintenance

Servicing the Air Cleaner

Note: Service the air cleaner more frequently (every few hours) if operating conditions are extremely dusty or sandy.

Removing the Element

1. Park the machine on a level surface and disengage the blade control (PTO).
2. Move the motion control levers to the brake position, stop the engine, remove the key, and wait for all moving parts to stop before leaving the operating position.
3. Clean around the air cleaner cover to prevent dirt from getting into the engine and causing damage. Lift the cover and remove the hose clamp securing the air cleaner assembly to the engine (Figure 27).
4. Loosen the hose clamp and remove the paper element (Figure 27).

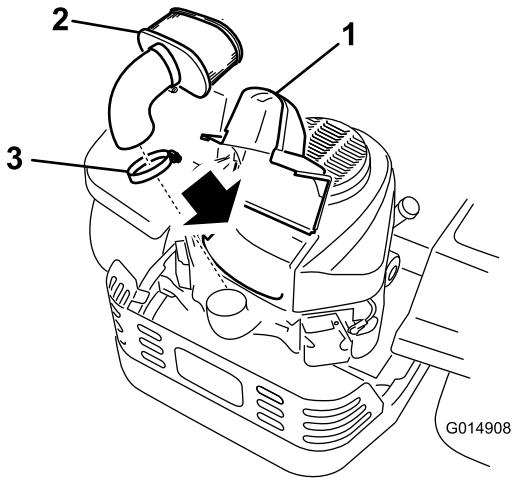

Figure 27

1. Cover
2. Paper element
3. Hose clamp

Cleaning the Element

Service Interval: Every 100 hours—Service the paper element. (more often in dusty, dirty conditions)

Every 200 hours/Yearly (whichever comes first)—Replace the paper element. (more often in dusty, dirty conditions)

1. Lightly tap the element on a flat surface to remove dust and dirt.
2. Inspect the element for tears, an oily film, and damage to the seal.

   Important: Never clean the paper element with pressurized air or liquids, such as solvent, gas, or kerosene. Replace the paper element if it is damaged or cannot be cleaned thoroughly.

Servicing the Engine Oil

Oil Type: Detergent oil (API service SF, SG, SH, SJ, or SL)

Crankcase Capacity:with a filter change, 70 ounces (2.1 l); without a filter change, 61 ounces (1.8 l)

Viscosity: See the table below.

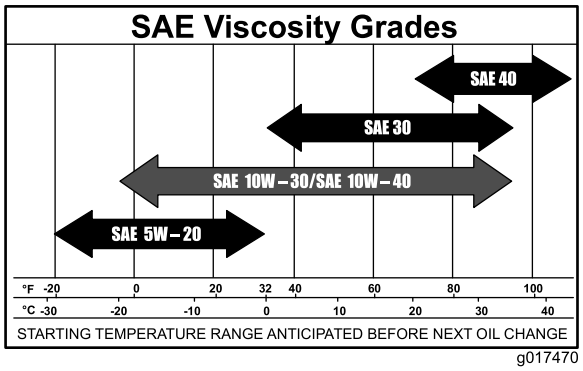

Figure 28

Note: Using multi grade oils (5W-20, 10W-30, and 10W -40) will increase oil consumption. Check oil level more frequently when using them.

Checking the Engine Oil Level

Service Interval: Before each use or daily

Note: Check the oil when the engine is cold.

⚠ WARNING

Contact with hot surfaces may cause personal injury.

Keep hands, feet, face, clothing and other body parts away the muffler and other hot surfaces.

Important: Do not overfill the crankcase with oil because damage to the engine may result. Do not run engine with oil below the low mark because the engine may be damaged.

1. Park the machine on a level surface, disengage the blade control switch, stop the engine, engage parking brake, and remove the key.
2. Make sure the engine is stopped, level, and is cool so the oil has had time to drain into the sump.
3. To keep dirt, grass clippings, etc., out of the engine, clean the area around the oil fill cap/dipstick before removing it.
4. Stop the engine, remove the key, and wait for all moving parts to stop before leaving the operating position (Figure 29).

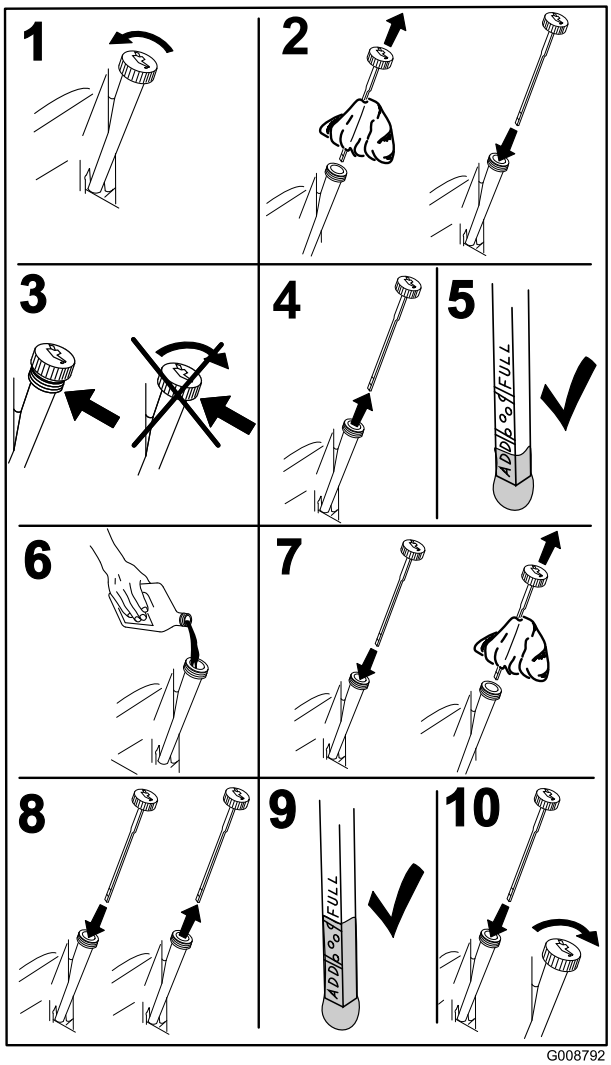

Figure 29

Changing the Engine Oil

Service Interval: After the first 8 hours—Change the engine oil.

Every 100 hours—Change the engine oil. (more often in dusty, dirty conditions)

Note: Dispose of the used oil at a recycling center.

1. Park the machine so that the drain side is slightly lower than the opposite side to assure the oil drains completely.

2. Disengage the PTO, move the motion control levers to the neutral locked position and set the parking brake.
3. Stop the engine, remove the key, and wait for all moving parts to stop before leaving the operating position (Figure 30).

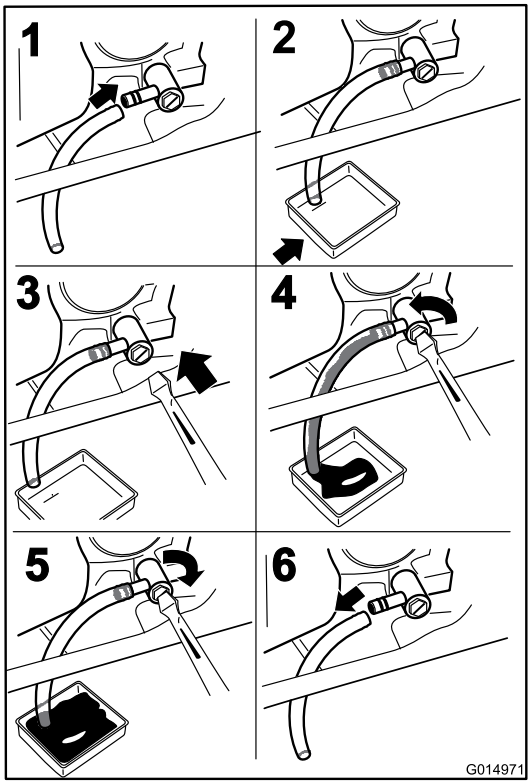

Figure 30

4. Slowly pour approximately 80% of the specified oil into the filler tube and slowly add the additional oil to bring it to the **Full** mark (Figure 31).

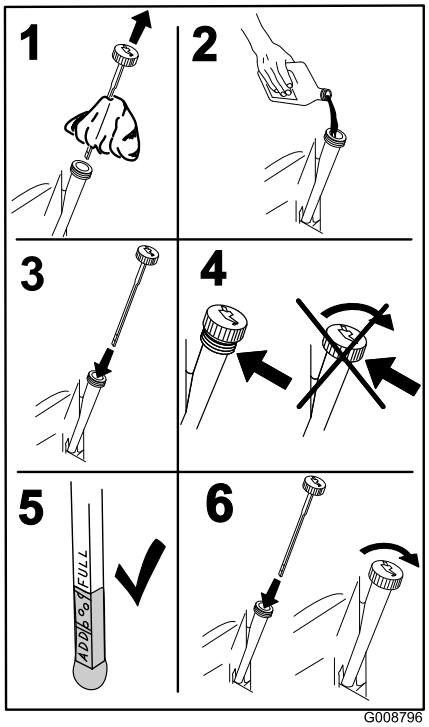

Figure 31

Changing the Engine Oil Filter

Service Interval: Every 200 hours—Change the oil filter. (more often in dusty, dirty conditions)

Note: Change the engine oil filter more frequently when operating conditions are extremely dusty or sandy.

1. Drain the oil from the engine; refer to Changing the Engine Oil.

2. Change the engine oil filter (Figure 32).

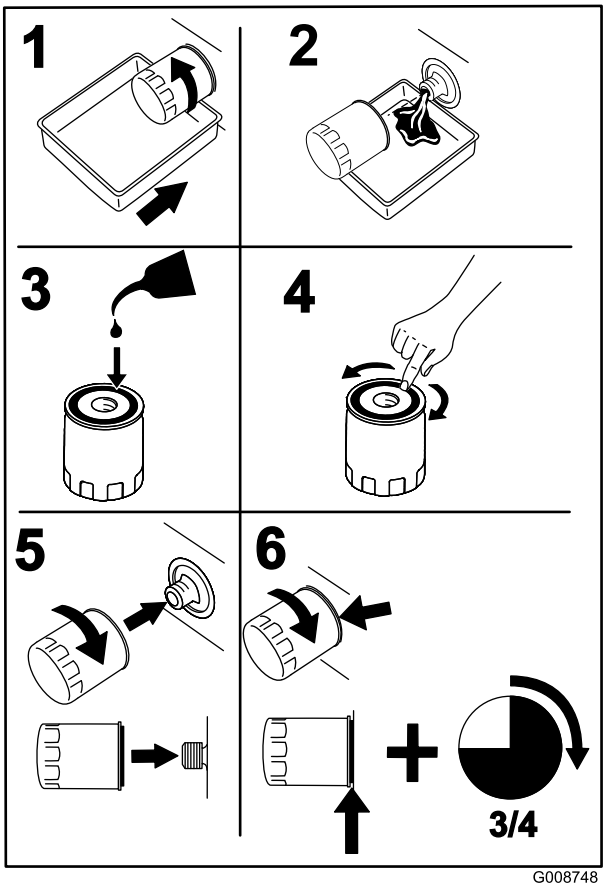

Figure 32

Note: Ensure the oil filter gasket touches the engine and then an extra 3/4 turn is completed.

3. Fill the crankcase with the proper type of new oil; refer to Changing the Oil.

Servicing the Spark Plug

Service Interval: Every 100 hours—Check the spark plug(s).

Make sure the air gap between the center and side electrodes is correct before installing the spark plug. Use a spark plug wrench for removing and installing the spark plug(s) and a gapping tool/feeler gauge to check and adjust the air gap. Install a new spark plug(s) if necessary.

Type: NGK BPR4ES (or equivalent)

Air Gap: 0.030 inch (0.76 mm)

Removing the Spark Plug

1. Disengage the PTO, move the motion control levers to the neutral locked position and set the parking brake.
2. Stop the engine, remove the key, and wait for all moving parts to stop before leaving the operating position.

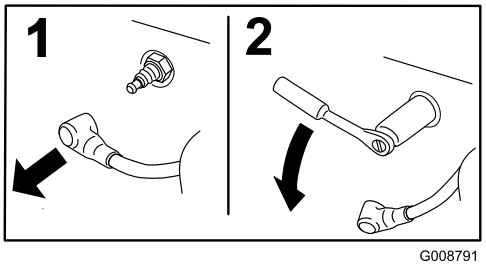

Figure 33

Note: Due to the deep recess around the spark plug, blowing out the cavity with compressed air is usually the most effective method for cleaning. The spark plug is most accessible when the blower housing is removed for cleaning.

Checking the Spark Plug

Important: Never clean the spark plug(s). Always replace the spark plug(s) when it has: a black coating, worn electrodes, an oily film, or cracks.

If you see light brown or gray on the insulator, the engine is operating properly. A black coating on the insulator usually means the air cleaner is dirty.

Set the gap to 0.030 inches (0.76 mm).

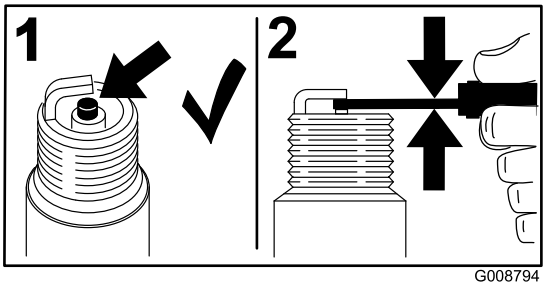

Figure 34

Installing the Spark Plug

Tighten the spark plug(s) to 16 ft-lb (22 N-m).

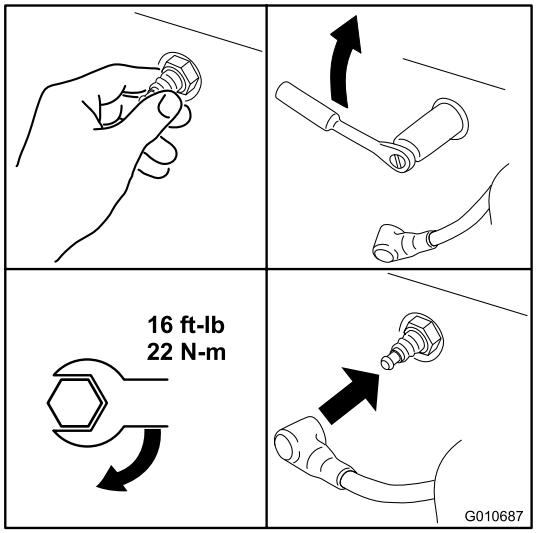

Figure 35

Cleaning the Cooling System

Clean the air intake screen from grass and debris before each use.

1. Disengage the blade control switch and move the control levers to the neutral locked position and apply the parking brake.
2. Stop the engine, remove the key, and wait for all moving parts to stop before leaving the operating position.
3. Remove the air intake screen, air cleaner cover, and fan housing.
4. Clean debris and grass from the parts.
5. Install the air intake screen, air cleaner cover, and fan housing.

Fuel System Maintenance

⚠ DANGER

In certain conditions, gasoline is extremely flammable and highly explosive. A fire or explosion from gasoline can burn you and others and can damage property.

- **Perform any fuel related maintenance when the engine is cold. Do this outdoors in an open area. Wipe up any gasoline that spills.**
- **Never smoke when draining gasoline, and stay away from an open flame or where a spark may ignite the gasoline fumes.**

Replacing the In-line Fuel Filter

Service Interval: Every 100 hours—Replace the in-line fuel filter

Never install a dirty filter if it is removed from the fuel line.

1. Park the machine on a level surface and disengage the blade control switch.
2. Move the motion control levers outward to the park position, stop the engine, remove the key, and wait for all moving parts to stop before leaving the operating position.
3. Locate the fuel filter on the side of the engine as shown in Figure 36.

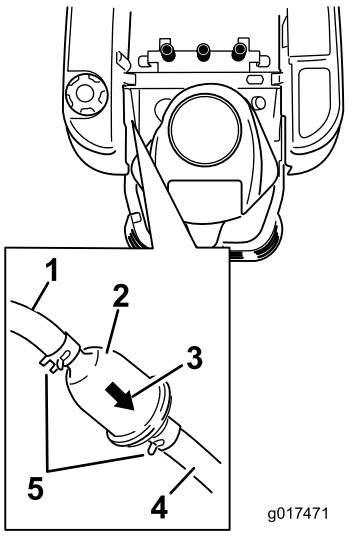

Figure 36

1. Fuel line from tank
2. In-line Fuel filter
3. Flow direction arrow
4. Fuel line to engine
5. Hose clamp

4. Squeeze the ends of the hose clamps together and slide them away from the filter (Figure 36).
5. Remove the filter from the fuel lines.
6. Install a new filter with the flow direction arrow coming from the fuel tank and pointing to the engine. Move the hose clamps close to the filter (Figure 36) to secure it in place.

Electrical System Maintenance

WARNING

CALIFORNIA
Proposition 65 Warning

Battery posts, terminals, and related accessories contain lead and lead compounds, chemicals known to the State of California to cause cancer and reproductive harm. Wash hands after handling.

Charging the Battery

Removing the Battery

⚠ WARNING

Battery terminals or metal tools could short against metal machine components causing sparks. Sparks can cause the battery gasses to explode, resulting in personal injury.

- **When removing or installing the battery, do not allow the battery terminals to touch any metal parts of the machine.**
- **Do not allow metal tools to short between the battery terminals and metal parts of the machine.**

1. Park the machine on a level surface and disengage the blade control switch.
2. Move the motion control levers outward to the park position, stop the engine, remove the key, and wait for all moving parts to stop before leaving the operating position.
3. Raise the seat to access the battery.
4. Disconnect the negative (black) ground cable from the battery post (Figure 37). Retain all fasteners.

⚠ WARNING

Incorrect battery cable routing could damage the machine and cables causing sparks. Sparks can cause the battery gasses to explode, resulting in personal injury.

- **Always disconnect the negative (black) battery cable before disconnecting the positive (red) cable.**
- **Always connect the positive (red) battery cable before connecting the negative (black) cable.**

5. Slide the rubber cover up the positive (red) cable. Disconnect the positive (red) cable from the battery post (Figure 37). Retain all fasteners.
6. Remove the battery hold-down (Figure 37) and lift the battery from the battery tray.

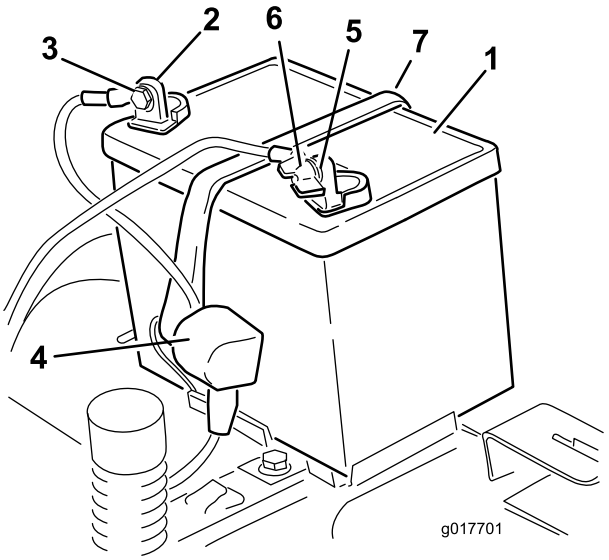

Figure 37

1. Battery
2. Positive battery post
3. Bolt, washer, and nut
4. Terminal boot
5. Negative battery post
6. Wing nut, washer, and bolt
7. Battery hold-down

Charging the Battery

Service Interval: Before storage—Charge the battery and disconnect battery cables.

1. Remove the battery from the chassis; refer to Removing the Battery.
2. Charge the battery for a minimum of 1 hour at 6 to 10 amps. Do not overcharge the battery.
3. When the battery is fully charged, unplug the charger from the electrical outlet, then disconnect the charger leads from the battery posts (Figure 38).

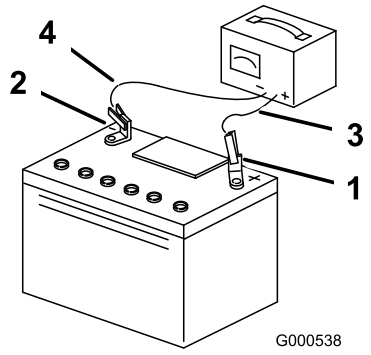

Figure 38

1. Positive battery post
2. Negative battery post
3. Red (+) charger lead
4. Black (-) charger lead

Note: Do not run the machine with the battery disconnected, electrical damage may occur.

Installing the Battery

1. Position the battery in the tray (Figure 37).
2. Install the positive (red) battery cable to the positive (+) battery terminal using the fasteners removed previously.
3. Install the negative battery cable to the negative (-) battery terminal using the fasteners removed previously.
4. Slide the red terminal boot onto the positive (red) battery post.
5. Secure the battery with the hold-down (Figure 37).
6. Lower the seat.

Servicing the Fuses

The electrical system is protected by fuses. It requires no maintenance; however, if a fuse blows, check the component/circuit for a malfunction or short.

Fuse:

- Main F1-30 amp, blade-type
- Charge Circuit F2-25 amp, blade-type

1. Remove the screws securing the control panel to the machine. Retain all fasteners
2. Lift the control pane up to access the main wiring harness and fuse block (Figure 39).
3. To replace a fuse, pull out on the fuse to remove it (Figure 39).

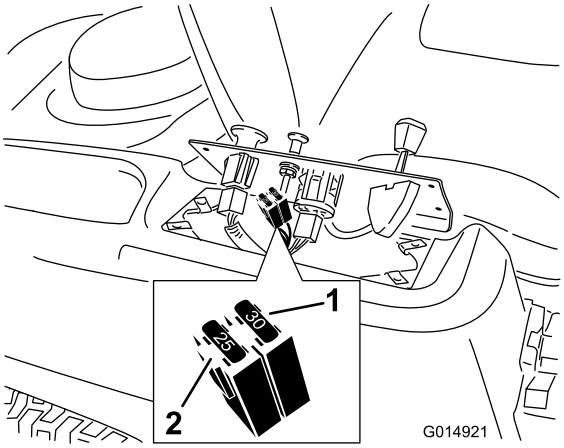

Figure 39

1. Main-30 amp
2. Charge circuit-25 amp

4. Return the control panel to its original position. Use the screws removed previously to secure the panel to the machine.

Drive System Maintenance

Checking the Tire Pressure

Service Interval: Every 25 hours—Check tire pressure.

Maintain the air pressure in the front and rear tires as specified. Uneven tire pressure can cause uneven cut. Check the pressure at the valve stem (Figure 40). Check the tires when they are cold to get the most accurate pressure reading.

Refer to the maximum pressure suggested by the tire manufacturer on the sidewall of the caster wheel tires.

Inflate the rear drive wheel tires to 12 psi.

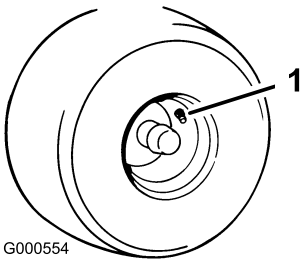

Figure 40

1. Valve stem

Releasing the Electric Brake

The electric brake can be release by manually rotating the link arms forward. Once the electric brake is energized the brake will reset.

To release the brake:

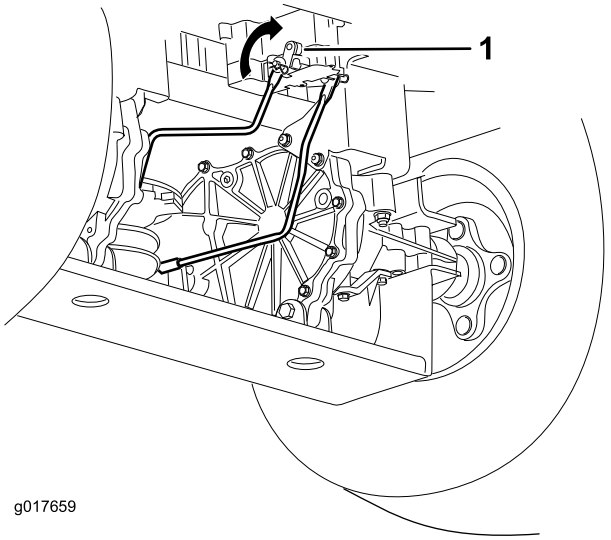

Figure 41

1. Brake link arm on the electric brake control module

1. Locate the shaft on the electric brake where the brake link arms are connected.
2. Rotate the shaft forward to release the brake.

Mower Maintenance

Servicing the Cutting Blades

Maintain sharp blades throughout the cutting season because sharp blades cut cleanly without tearing or shredding the grass blades. Tearing and shredding turns grass brown at the edges, which slows growth and increases the chance of disease.

Check the cutter blades daily for sharpness, and for any wear or damage. File down any nicks and sharpen the blades as necessary. If a blade is damaged or worn, replace it immediately with a genuine Toro replacement blade. For convenient sharpening and replacement, you may want to keep extra blades on hand.

⚠ WARNING

A worn or damaged blade can break, and a piece of the blade could be thrown into the operator's or bystander's area, resulting in serious personal injury or death.

- **Inspect the blade periodically for wear or damage.**
- **Replace a worn or damaged blade.**

Before Inspecting or Servicing the Blades

Park the machine on a level surface, disengage the blade control switch, and move the motion control levers outward to the park position. Stop the engine and remove the key.

Inspecting the Blades

Service Interval: Before each use or daily—Check the cutting blades.

1. Inspect the cutting edges (Figure 42). If the edges are not sharp or have nicks, remove and sharpen the blades; refer to Sharpening the Blades.
2. Inspect the blades, especially the curved area (Figure 42). If you notice any damage, wear, or a slot forming in this area (item 3 in Figure 42), immediately install a new blade.

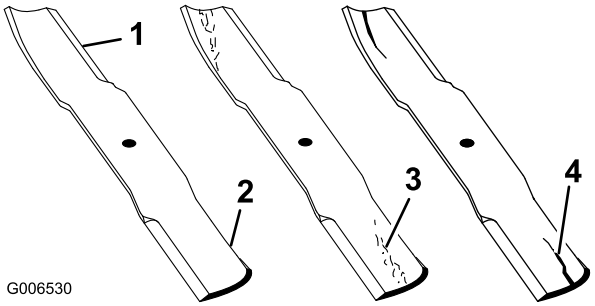

Figure 42

1. Cutting edge
2. Curved area
3. Wear/slot forming
4. Damage

Checking for Bent Blades

Note: The machine must be on a level surface for the following procedure.

1. Raise the mower deck to the highest height-of-cut position; also considered the 'transport' position.
2. While wearing thickly padded gloves or other adequate hand protection slowly rotate blade to be measured into a position that allows effective measurement of the distance between the cutting edge and the level surface the machine is on.

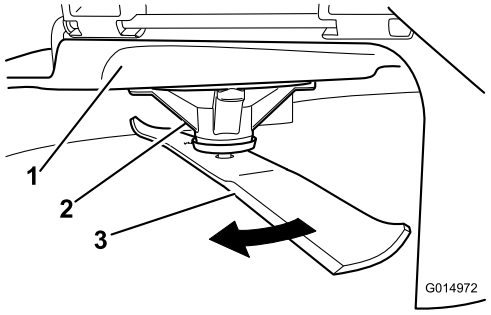

Figure 43

1. Deck
2. Spindle housing
3. Blade

3. Measure from the tip of the blade to the flat surface here.

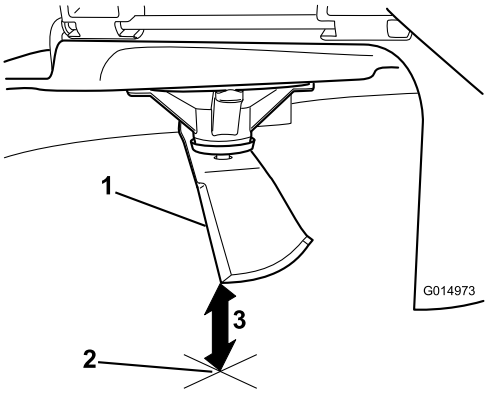

Figure 44

1. Blade, in position for measuring
2. Level surface
3. Measured distance between blade and surface (A)

4. Rotate the same blade 180 degrees so that the opposing cutting edge is now in the same position.

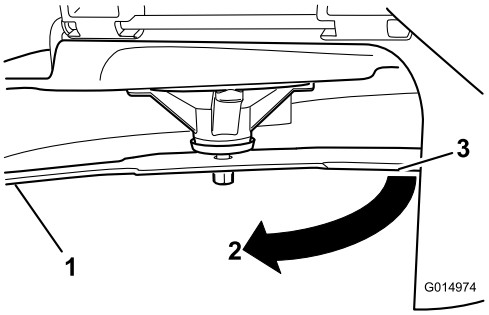

Figure 45

1. Blade, side previously measured
2. Measurement position used previously
3. Opposing side of blade being moved into measurement position

5. Measure from the tip of the blade to the flat surface here. The variance should be no more than 1/8 inch (3mm).

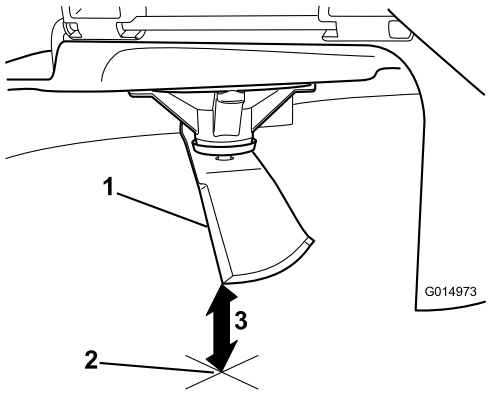

Figure 46

1. Opposing blade edge, in position for measuring
2. Level surface
3. Second measured distance between blade and surface (B)

⚠ WARNING

A blade that is bent or damaged could break apart and could seriously injure or kill you or bystanders.

- **Always replace bent or damaged blade with a new blade.**
- **Never file or create sharp notches in the edges or surfaces of blade.**

A. If the difference between A and B is greater than 1/8 inch (3mm) replace the blade with a new blade. Refer to Removing the Blades and Installing the Blades.

Note: If a bent blade is replaced with a new one and the dimension obtained continues to exceed 1/8 inch (3mm), the blade spindle could be bent. Contact an Authorized Toro Dealer for service.

B. If the variance is within constraints, move to the next blade..

Repeat this procedure on each blade.

Removing the Blades

The blades must be replaced if a solid object is hit, if the blade is out of balance, or the blade is bent. To ensure optimum performance and continued safety conformance of the machine, use genuine Toro replacement blades. Replacement blades made by other manufacturers may result in non-conformance with safety standards.

Hold the blade end using a rag or thickly-padded glove. Remove the blade bolt, curved washer, blade stiffener, and blade from the spindle shaft (Figure 47).

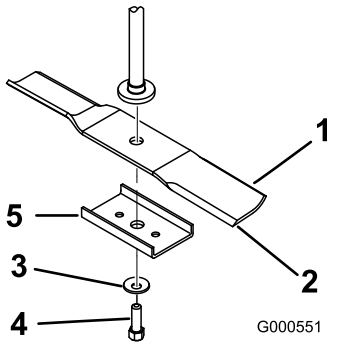

Figure 47

1. Sail area of blade
2. Blade
3. Curved washer
4. Blade bolt
5. Blade stiffener

Sharpening the Blades

1. Use a file to sharpen the cutting edge at both ends of the blade (Figure 48). Maintain the original angle. The blade retains its balance if the same amount of material is removed from both cutting edges.

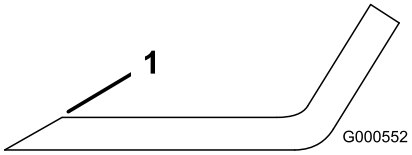

Figure 48

1. Sharpen at original angle

2. Check the balance of the blade by putting it on a blade balancer (Figure 49). If the blade stays in a horizontal position, the blade is balanced and can be used. If the blade is not balanced, file some metal off the end of the sail area only (Figure 48). Repeat this procedure until the blade is balanced.

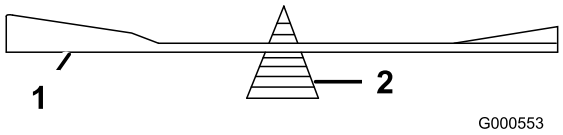

Figure 49

1. Blade
2. Balancer

Installing the Blades

1. Install the blade onto the spindle shaft (Figure 47).

Important: The curved part of the blade must be pointing upward toward the inside of the mower to ensure proper cutting.

2. Install the blade stiffener, the curved washer (cupped side toward the blade) and the blade bolt (Figure 47).
3. Torque the blade bolt to 35-65 ft-lb (47-88 N-m).

Leveling the Mower Deck

Check to ensure the mower deck is level any time you install the mower or when you see an uneven cut on your lawn.

The mower deck must be checked for bent blades prior to leveling; any bent blades must be removed and replaced. Refer to the Checking for Bent Blades procedure before continuing.

The mower deck must be leveled side-to-side first then the front to rear slope can be adjusted.

Requirements:

- The machine must be on a level surface.
- All four tire must be properly inflated. Refer to Checking the Tire Pressure in the Drive System Maintenance section.

Leveling the Mower from Side-to-Side

The mower blades must be level from side to side. Check the side-to-side level any time you install the mower or when you see an uneven cut on your lawn.

1. Park the machine on a level surface and disengage the blade control switch.
2. Move the motion control levers outward to the park position, stop the engine, remove the key, and wait for all moving parts to stop before leaving the operating position.
3. Check the air pressure of all four tires. If needed, adjust to the recommended inflation; refer to Checking the Tire Pressure in the Drive System Maintenance section.
4. Set the height-of-cut lever to the 3 inch (76 mm) position.
5. Carefully rotate the blade(s) side to side (Figure 50). Measure between the outside cutting edges and the flat surface (Figure 50). If both measurements are not within 3/16 inch (5 mm), an adjustment is required; continue with this procedure.

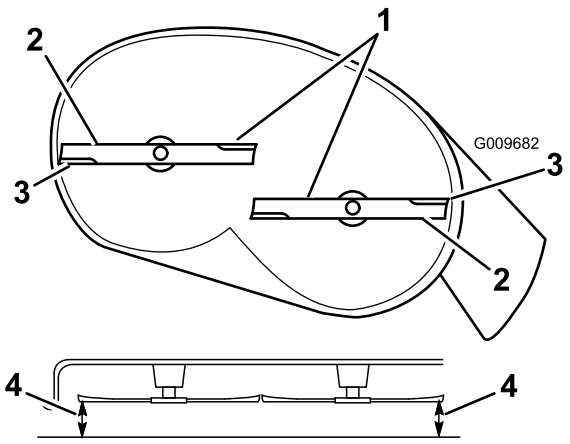

Figure 50

1. Blades side to side
2. Sail area of blade
3. Outside cutting edges
4. Measure here

6. Move to the left side of the machine. Loosen, but do not remove, the rear locking nut on the hanger bracket (Figure 51).
7. Loosen the side locking nut on the hanger bracket just enough to allow the eccentric plate to be adjusted (Figure 51). Use a 3/8 inch drive extension on a socket wrench to manipulate the eccentric plate. Use the wrench to reposition the height of the mower deck and adjust it so the measurements taken in Step 5 are with in 3/16 inch (5 mm).
8. Stop the deck at the adjusted position and tighten the side locking nut on the hanger bracket to hold the new position (Figure 51). Tighten the rear locking nut on the hanger bracket.
9. Continue leveling the deck by checking the front-to-rear blade slope; refer to Adjusting the Front-to-Rear Blade Slope.

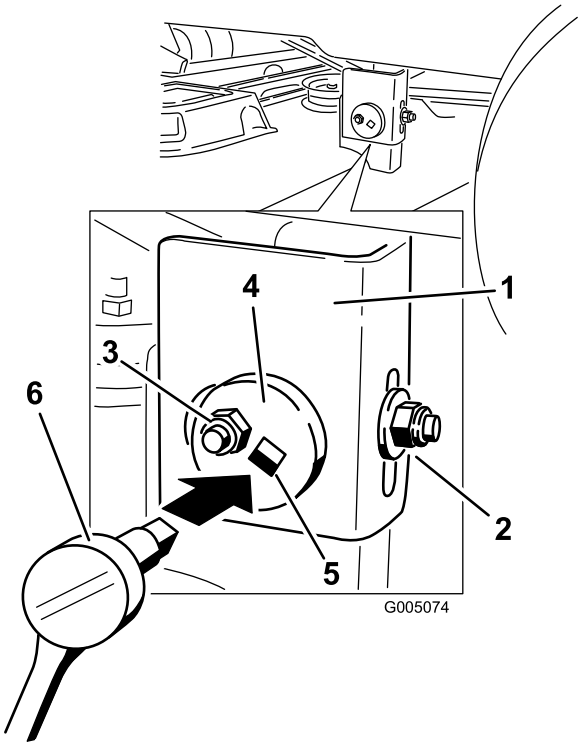

Figure 51

1. Hanger bracket
2. Rear locking nut
3. Side locking nut
4. Eccentric adjustment plate
5. Socket wrench hole
6. Socket wrench with 3/8 inch extension

Adjusting the Front-to-Rear Blade Slope

Check the front-to-rear blade level any time you install the mower. If the front of the mower is more than 5/16 inch (7.9 mm) lower than the rear of the mower, adjust the blade level using the following instructions:

1. Park the machine on a level surface and disengage the blade control switch.
2. Move the motion control levers outward to the park position, stop the engine, remove the key, and wait for all moving parts to stop before leaving the operating position.
3. Set the height-of-cut lever to middle position.

   Note: Check and adjust the side-to-side blade level. If you have not checked the setting; refer to Side-to-Side Leveling.
4. Carefully rotate the blades so they are facing front to rear (Figure 52).

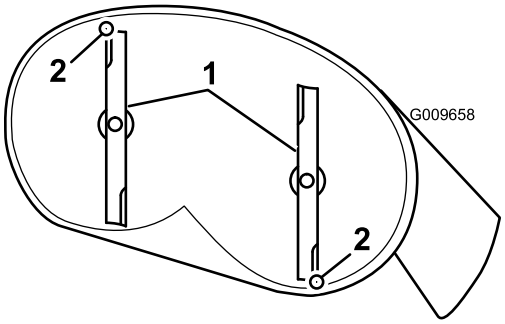

Figure 52

1. Blades front to rear
2. Measure from the tip of the blade to the flat surface here

5. Measure from the tip of the front blade to the flat surface and the tip of the rear blade to the flat surface (Figure 52). If the front blade tip is not 1/16-5/16 inch (1.6-7.9 mm) lower than the rear blade tip, adjust the front locknut.
6. To adjust the front-to-rear blade slope, rotate the adjustment nut in the front of the mower (Figure 53).

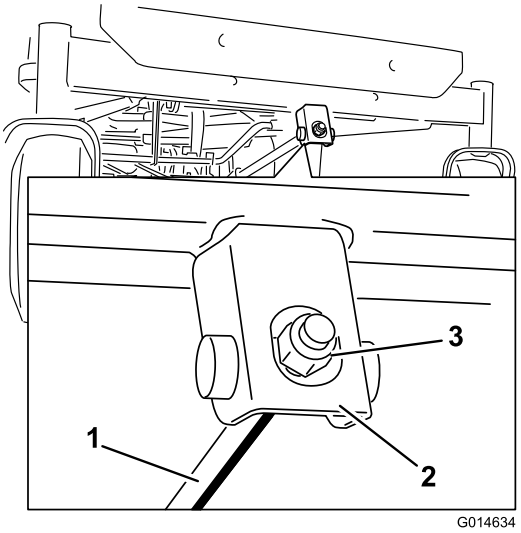

Figure 53

1. Adjusting rod
2. Adjusting block
3. Lock nut

7. To raise the front of the mower, tighten the adjustment nut. To lower the front of the mower, loosen the adjustment nut.
8. After adjustment, check the front-to-rear slope again. Continue adjusting the nut until the front blade tip is 1/16-5/16 inch (1.6-7.9 mm) lower than the rear blade tip (Figure 52).
9. When the front-to-rear blade slope is correct check the side-to-side level of the mower again; refer to Leveling the Mower from Side-to-Side.

Removing the Mower

1. Park the machine on a level surface and disengage the blade control switch.
2. Move the motion control levers outward to the park position, stop the engine, remove the key, and wait for all moving parts to stop before leaving the operating position.
3. Lower the height-of-cut lever to the lowest position.
4. Remove the hairpin cotter from the front support rod and remove the rod from the deck bracket (Figure 54). Carefully lower the front of the mower deck to the ground.

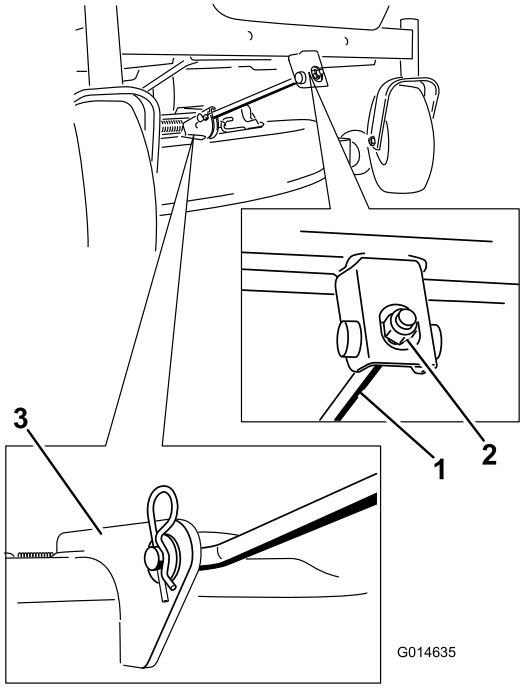

Figure 54

1. Front support rod
2. Locking nut
3. Deck bracket

5. Using the mower deck handles, lift the mower deck and hanger brackets clear of the rear lift rod and lower the mower carefully to the ground (Figure 55 and Figure 56).

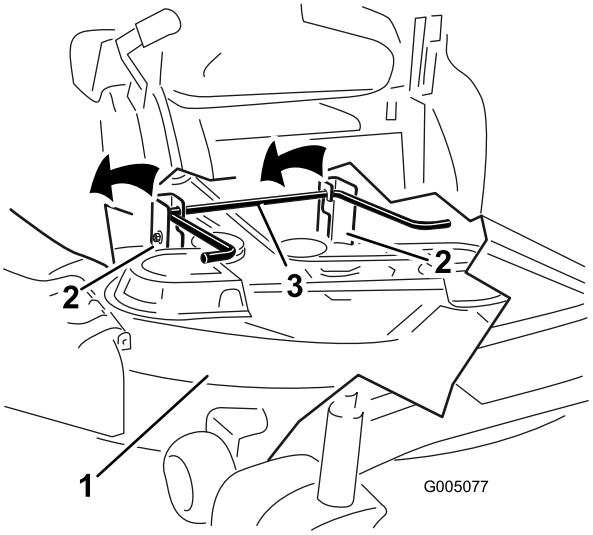

Figure 55

1. Mower deck
2. Hanger bracket
3. Rear lift rod

6. Slide the mower deck rearward to remove the mower belt from the engine pulley.
7. Slide the mower deck out from underneath the machine.

   Note: Retain all parts for future installation.

Mower Belt Maintenance

Inspecting the Belts

Service Interval: Every 25 hours—Check the belts for wear/cracks.

Check the belts for cracks, frayed edges, burn marks, or any other damage. Replace damaged belts.

Replacing the Mower Belt

Squealing when the belt is rotating, blades slipping when cutting grass, frayed belt edges, burn marks, and cracks are signs of a worn mower belt. Replace the mower belt if any of these conditions are evident.

1. Park the machine on a level surface and disengage the blade control switch.
2. Move the motion control levers outward to the park position, stop the engine, remove the key, and wait for all moving parts to stop before leaving the operating position.
3. Set the height-of-cut at the lowest cutting position [1-1/2 inch (38 mm)].
4. Using a spring removal tool, (Toro part no. 92-5771), remove the idler spring from the deck hook to

remove tension on the idler pulley and roll the belt off of the pulleys (Figure 56).

⚠ WARNING

The spring is under tension when installed and can cause personal injury.

Be careful when removing the belt.

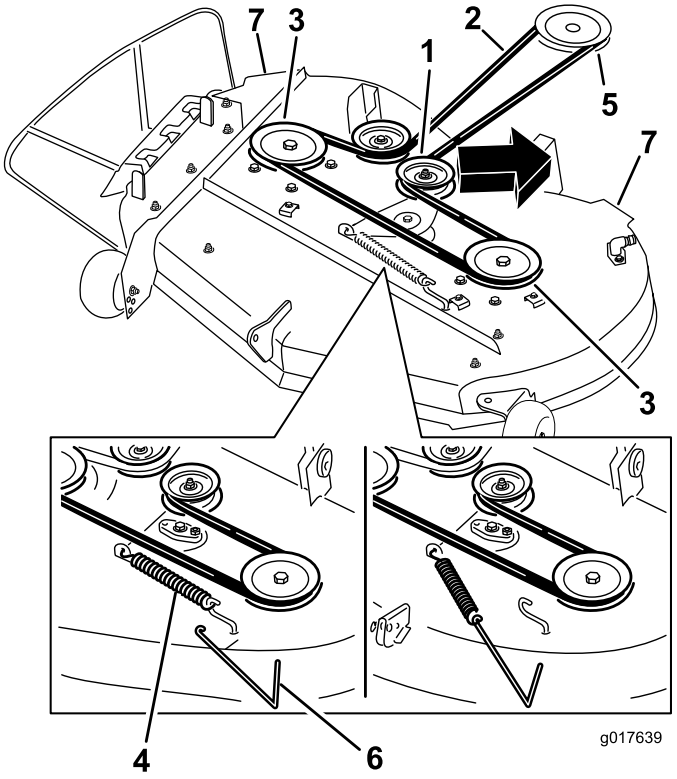

Figure 56

1. Idler pulley
2. Mower belt
3. Outside pulley
4. Spring
5. Engine pulley
6. Spring removal too
7. Mower deck handles

5. Route the new belt around the engine pulley and mower pulleys (Figure 56).
6. Using a spring removal tool, (Toro part no. 92-5771), install the idler spring over the deck hook and placing tension on the idler pulley and mower belt ((Figure 56).

Installing the Mower

1. Park the machine on a level surface and disengage the blade control switch.
2. Move the motion control levers outward to the park position, stop the engine, remove the key, and wait for all moving parts to stop before leaving the operating position.
3. Slide the mower under the machine.
4. Lower the height-of-cut lever to the lowest position.
5. Lift the rear of the mower deck and guide the hanger brackets over the rear lift rod (Figure 55).
6. Attach the front support rod to the mower deck with the clevis pin and hairpin cotter (Figure 54).
7. Install the mower belt onto the engine pulley; refer to Replacing the Mower Belt.

Replacing the Grass Deflector

Service Interval: Before each use or daily—Inspect the grass deflector for damage

⚠ WARNING

An uncovered discharge opening could allow the lawn mower to throw objects in the operator's or bystander's direction and result in serious injury. Also, contact with the blade could occur.

Never operate the lawn mower unless you install a mulch plate, discharge deflector, or grass collection system.

Inspect the grass deflector for damage before each use. Replace any damaged parts before use.

1. Disengage the spring from the notch in the deflector bracket and slide the rod out of the welded deck brackets, spring, and discharge deflector (Figure 57). Remove the damaged or worn discharge deflector.

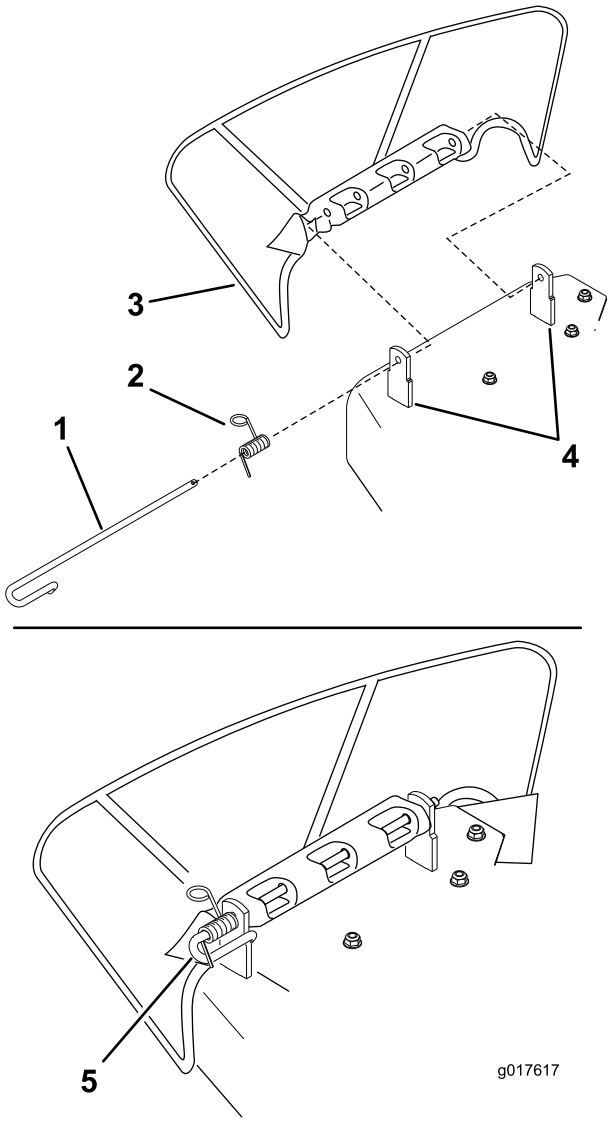

Figure 57

1. Rod
2. Spring
3. Deflector
4. Deck brackets
5. Spring installed over the rod

2. Position the new discharge deflector with the bracket ends between the welded brackets on the deck as shown in Figure 57.
3. Install the spring onto the straight end of the rod. Position the spring on the rod as shown in so the shorter spring end is coming from under the rod before the bend and going over the rod as it returns from the bend.
4. Lift the loop end of the spring and place it into the notch on the deflector bracket (Figure 58).

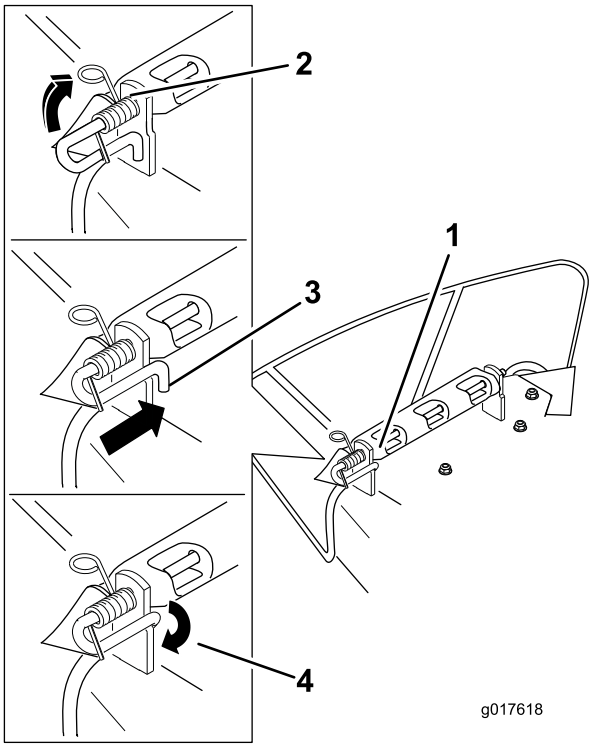

Figure 58

1. Rod and spring assembly installed
2. Loop end of the spring installed into the notch in the deflector bracket
3. Rod, short end, moved behind mower bracket
4. Short end, retained by mower bracket.

5. Secure the rod and spring assembly by twisting it so the short end of the rod can be placed behind the front bracket welded to the deck (Figure 58).

Important: The grass deflector must be spring loaded in the down position. Lift the deflector up to test that it snaps to the full down position.

Cleaning

Washing the Underside of the Mower

Service Interval: Before each use or daily—Clean the mower housing.

Wash the underside of the mower after each use to prevent grass buildup for improved mulch action and clipping dispersal.

1. Park the machine on a level surface and disengage the blade control switch.
2. Move the motion control levers outward to the park position, stop the engine, remove the key, and wait for all moving parts to stop before leaving the operating position.
3. Attach the hose coupling to the end of the mower washout fitting, and turn the water on high (Figure 59).

   Note: Spread petroleum jelly on the washout fitting O-ring to make the coupling slide on easier and protect the O-ring.

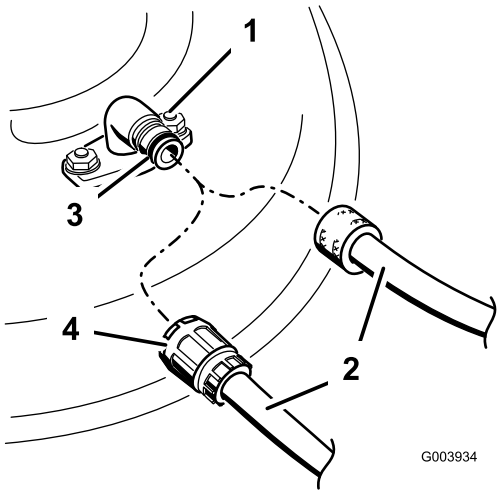

Figure 59

1. Washout fitting
2. Hose
3. O-ring
4. Coupling

4. Lower the mower to the lowest height-of-cut.
5. Sit on the seat and start the engine. Engage the blade control switch and let the mower run for one to three minutes.
6. Disengage the blade control switch, stop the engine, and remove the ignition key. Wait for all moving parts to stop.
7. Turn the water off and remove the coupling from the washout fitting.

   Note: If the mower is not clean after one washing, soak it and let it stand for 30 minutes. Then repeat the process.
8. Run the machine and mower blades again for one to three minutes to remove excess water.
9. Turn off the mower blades.

⚠ WARNING

A broken or missing washout fitting could expose you and others to thrown objects or blade contact. Contact with blade or thrown debris can cause injury or death.

- **Replace broken or missing washout fitting immediately, before using mower again.**
- **Never put your hands or feet under the mower or through openings in the mower.**

Storage

Cleaning and Storage

1. Disengage the blade control switch, move the motion controls outward to the park position, stop the engine, and remove the key.
2. Remove grass clippings, dirt, and grime from the external parts of the entire machine, especially the engine. Clean dirt and chaff from the outside of the engine cylinder head fins and blower housing.

   Important: You can wash the machine with mild detergent and water. Do not pressure wash the machine. Avoid excessive use of water, especially near the control panel, under the seat, around the engine, hydraulic pumps, and motors.
3. Service the air cleaner; refer to Servicing the Air Cleaner in the Engine Maintenance section.
4. Grease and oil the machine; refer to the Lubrication section.
5. Change the crankcase oil and filter; refer to Servicing the Engine Oil in the Engine Maintenance section.
6. Check the tire pressure; refer to Checking the Tire Pressure in the Drive System Maintenance section.
7. Charge the battery; refer to Servicing the Battery in the Electrical System Maintenance section.
8. Check the condition of the blades; refer to Servicing the Cutting Blades in the Mower Maintenance section.
9. Prepare the machine for storage when non-use occurs over 30 days. Prepare the machine for storage as follows.
10. Add a petroleum based stabilizer/conditioner to the fuel in the tank. Follow the mixing instructions from the stabilizer manufacturer. Do not use an alcohol based stabilizer (ethanol or methanol).

    Note: A fuel stabilizer/conditioner is most effective when mixed with fresh gasoline and used at all times.

    Run the engine to distribute the conditioned fuel through the fuel system (5 minutes).

    Important: Do not store stabilizer/conditioned gasoline over 90 days.
11. Remove the spark plug(s) and check its condition; refer to Servicing the Spark Plug in the Engine Maintenance section. With the spark plug(s) removed from the engine, pour two tablespoons of engine oil into the spark plug hole. Use the starter to crank the engine and distribute the oil inside the cylinder. Install the spark plug(s). Do not install the wire on the spark plug(s).
12. Clean any dirt and chaff from the top of the mower.
13. Scrape any heavy buildup of grass and dirt from the underside of the mower, then wash the mower with a garden hose.
14. Check the condition of the drive and mower belts.
15. Check and tighten all bolts, nuts, and screws. Repair or replace any part that is worn or damaged.
16. Paint all scratched or bare metal surfaces. Paint is available from your Authorized Service Dealer.
17. Store the machine in a clean, dry garage or storage area. Remove the key from the ignition switch and keep it in a memorable place. Cover the machine to protect it and keep it clean.

Troubleshooting

Problem	Possible Cause	Corrective Action
The engine overheats.	1. The engine load is excessive. 2. The oil level in the crankcase is low. 3. The cooling fins and air passages under the engine blower housing are plugged. 4. The air cleaner is dirty. 5. Dirt, water, or stale fuel is in fuel system.	1. Reduce ground speed. 2. Add oil to the crankcase. 3. Remove the obstruction from the cooling fins and air passages. 4. Clean or replace the air cleaner element. 5. Contact an Authorized Service Dealer
The starter does not crank	1. The blade control switch is engaged. 2. The motion control levers are not in the park position. 3. The battery is dead. 4. The electrical connections are corroded or loose. 5. A fuse is blown. 6. A relay or switch is damaged.	1. Move the blade control switch to Disengaged. 2. Move the motion control levers outward to the park position. 3. Charge the battery. 4. Check the electrical connections for good contact. 5. Replace the fuse. 6. Contact an Authorized Service Dealer.
The engine will not start, starts hard, or fails to keep running.	1. The fuel tank is empty. 2. The choke is not on. 3. The air cleaner is dirty. 4. The spark plug wire(s) is loose or disconnected. 5. The spark plug(s) is pitted, fouled, or the gap is incorrect. 6. There is dirt in fuel filter. 7. Dirt, water, or stale fuel is in fuel system. 8. There is incorrect fuel in the fuel tank. 9. The oil level in the crankcase is low.	1. Fill the fuel tank. 2. Move the choke lever to On. 3. Clean or replace the air cleaner element. 4. Install the wire(s) on the spark plug. 5. Install a new, correctly gapped spark plug(s). 6. Replace the fuel filter. 7. Contact an Authorized Service Dealer. 8. Drain the tank and replace the fuel with the proper type. 9. Add oil to the crankcase.
The engine loses power.	1. The engine load is excessive. 2. The air cleaner is dirty. 3. The oil level in the crankcase is low. 4. The cooling fins and air passages under the engine blower housing are plugged. 5. The spark plug(s) is pitted, fouled, or the gap is incorrect. 6. The fuel tank vent is blocked. 7. There is dirt in the fuel filter. 8. Dirt, water, or stale fuel is in the fuel system. 9. There is incorrect fuel in the fuel tank.	1. Reduce ground speed. 2. Clean the air cleaner element. 3. Add oil to the crankcase. 4. Remove the obstruction from the cooling fins and air passages. 5. Install a new, correctly gapped spark plug(s). 6. Contact an Authorized Service Dealer. 7. Replace the fuel filter. 8. Contact an Authorized Service Dealer. 9. Drain the tank and replace the fuel with the proper type.
The machine does not drive.	1. The bypass valves are open 2. The traction belts are worn, loose, or broken. 3. The traction belts are off of the pulleys. 4. The transmission has failed.	1. Close the tow valves. 2. Contact an Authorized Service Dealer. 3. Contact an Authorized Service Dealer. 4. Contact an Authorized Service Dealer.

Problem	Possible Cause	Corrective Action
There is abnormal vibration.	1. The engine mounting bolts are loose. 2. The engine pulley, idler pulley, or blade pulley is loose. 3. The engine pulley is damaged. 4. The cutting blade(s) is/are bent or unbalanced. 5. A blade mounting bolt is loose. 6. A blade spindle is bent.	1. Tighten the engine mounting bolts. 2. Tighten the appropriate pulley. 3. Contact an Authorized Service Dealer. 4. Install a new cutting blade(s). 5. Tighten the blade mounting bolt. 6. Contact an Authorized Service Dealer.
Uneven cutting height.	1. The blade(s) is not sharp. 2. A cutting blade(s) is/are bent. 3. The mower is not level. 4. An anti-scalp wheel is not set correctly. 5. The underside of the mower is dirty. 6. The tire pressure is incorrect. 7. A blade spindle is bent.	1. Sharpen the blade(s). 2. Install a new cutting blade(s). 3. Level the mower from side-to-side and front-to-rear. 4. Adjust the anti-scalp wheel height. 5. Clean the underside of the mower. 6. Adjust the tire pressure. 7. Contact an Authorized Service Dealer.
The blades do not rotate.	1. The drive belt is worn, loose or broken. 2. The drive belt is off of the pulley. 3. The Power Take-Off (PTO) switch or PTO clutch is faulty. 4. The mower belt is worn, loose, or broken.	1. Install a new drive belt. 2. Install the drive belt and check the adjusting shafts and belt guides for the correct position. 3. Contact an Authorized Service Dealer. 4. Install a new mower belt.

Schematics

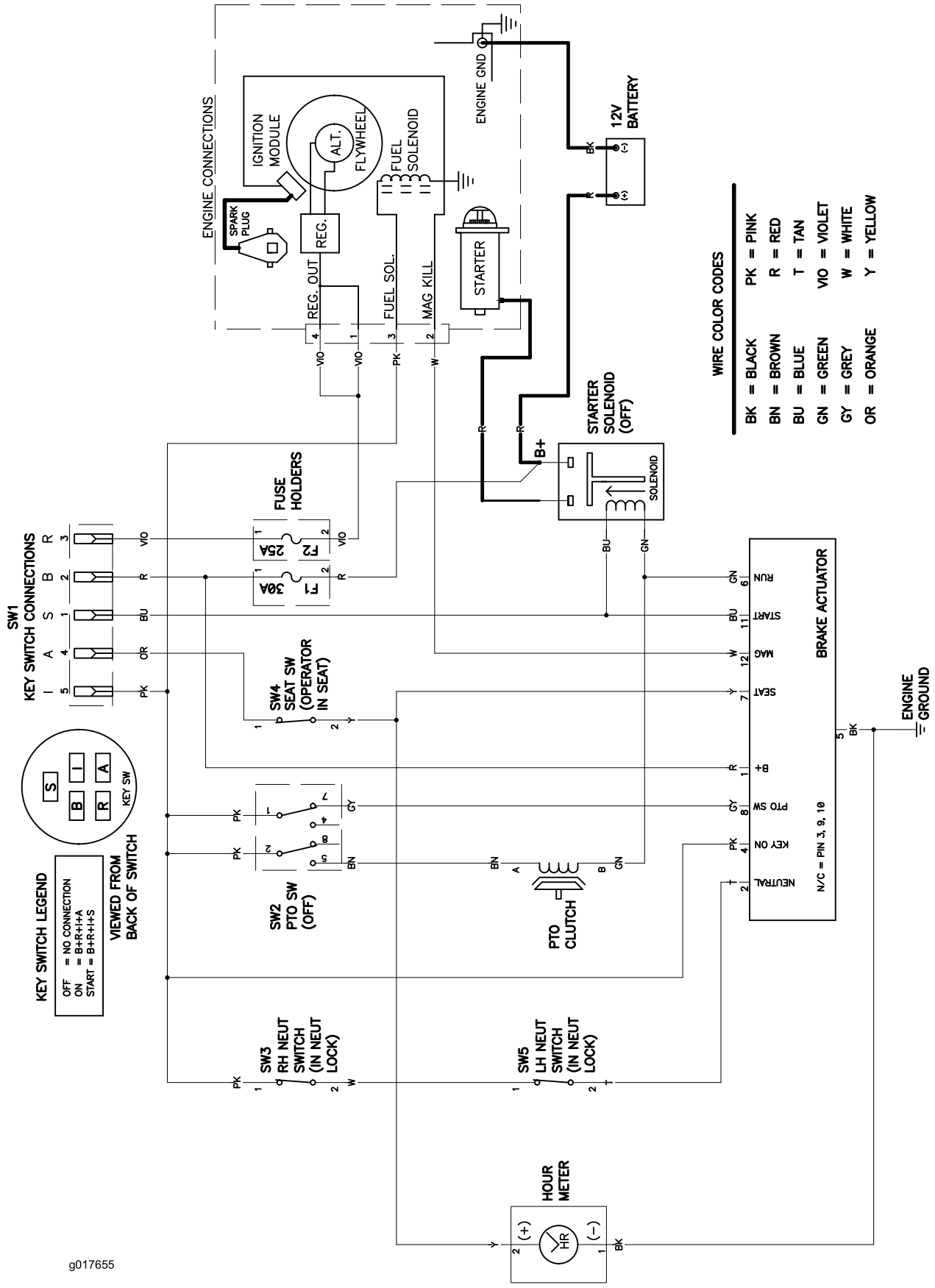

Electrical Diagram (Rev. A)

Notes:

Notes:

Notes:

TimeCutter
and
TITAN
Mowers

The Toro Total Coverage Warranty

Limited Warranty (see warranty periods below)

Conditions and Products Covered

The Toro Company and its affiliate, Toro Warranty Company, pursuant to an agreement between them, jointly promise to the original purchaser to repair the Toro Products listed below if defective in materials or workmanship.

The following time periods apply from the date of purchase by the original owner:

Products	Warranty Period
TimeCutter and MX Mowers	Residential use[2] – 3 years
• Engines[1] — Residential use	Kawasaki – 3 years Kohler – 3 years Toro – 3 years
TimeCutter and MX Mowers	Commercial use 30 days
• Engines[1] — Commercial use	Kawasaki – 3 years Kohler – 90 days Toro – 90 days
TITAN Mowers – Residential or Commercial use	3 years or 240 hours[3]
• Engines[1] — Residential or Commercial use	Kawasaki – 3 years Kohler – 2 years
• Frame	Lifetime (original owner only)[4]
TITAN MX Mowers – Residential or Commercial use	3 years or 400 hours[3]
• Engines[1] — Residential or Commercial use	Kawasaki – 3 years Kohler – 2 years
• Frame	Lifetime (original owner only)[4]
All Mowers	
• Attachments	1 year
• Battery	90 days Parts and Labor 1 year Parts only
• Belts and Tires	90 days

[1]Some engines used on Toro Products are warranted by the engine manufacturer.

[2]Residential use means use of the product on the same lot as your home. Use at more than one location is considered commercial use and the commercial use warranty would apply.

[3]Whichever occurs first.

[4]Lifetime Frame Warranty - If the main frame, consisting of the parts welded together to form the tractor structure that other components such as the engine are secured to, cracks or breaks in normal use, it will be repaired or replaced, at Toro's option, under warranty at no cost for parts and labor. Frame failure due to misuse or abuse and failure or repair required due to rust or corrosion are not covered.

This warranty includes the cost of parts and labor, but you must pay transportation costs.

Warranty may be denied if the hour meter is disconnected, altered, or shows signs of being tampered with.

Owner Responsibilities

You must maintain your Toro Product by following the maintenance procedures described in the *Operator's Manual*. Such routine maintenance, whether performed by a dealer or by you, is at your expense.

Instructions for Obtaining Warranty Service

If you think that your Toro Product contains a defect in materials or workmanship, follow this procedure:

1. Contact any Authorized Toro Service Dealer to arrange service at their dealership. To locate a dealer convenient to you, refer to the *Yellow Pages* of your telephone directory (look under “Lawn Mowers”) or access our web site at www.Toro.com. You may also call the numbers listed in item #3 to use the 24-hour Toro Dealer locator system.
2. Bring the product and your proof of purchase (sales receipt) to the Service Dealer. The dealer will diagnose the problem and determine if it is covered under warranty.
3. If for any reason you are dissatisfied with the Service Dealer’s analysis or with the assistance provided, contact us at:

   Customer Care Department, RLC Division
   Toro Warranty Company
   8111 Lyndale Avenue South
   Bloomington, MN 55420-1196
   Toll free at 866-216-6029 (U.S. customers)
   Toll free at 866-216-6030 (Canadian customers)

Items and Conditions Not Covered

There is no other express warranty except for special emission system coverage and engine warranty coverage on some products. This express warranty does not cover the following:

- Cost of regular maintenance service or parts, such as filters, fuel, lubricants, oil changes, spark plugs, air filters, blade sharpening/worn blade on mowers, cable/linkage adjustments, or brake and clutch adjustments
- Components failing due to normal wear
- Any product or part which has been altered or misused and requires replacement or repair due to accidents or lack of proper maintenance
- Repairs necessary due to improper battery care, failure to use fresh fuel (less than one month old), or failure to properly prepare the unit prior to any period of non-use over one month
- Pickup and delivery charges
- Operational misuse, neglect, or accidents
- Repairs or attempted repairs by anyone other than an Authorized Toro Service Dealer

General Conditions

All repairs covered by these warranties must be performed by an Authorized Toro Service Dealer using Toro approved replacement parts.

Neither The Toro Company nor Toro Warranty Company is liable for indirect, incidental or consequential damages in connection with the use of the Toro Products covered by this warranty, including any cost or expense of providing substitute equipment or service during reasonable periods of malfunction or non-use pending completion of repairs under this warranty.

All implied warranties of merchantability (that the product is fit for ordinary use) and fitness for use (that the product is fit for a particular purpose) are limited to the duration of the express warranty.

Some states do not allow exclusions of incidental or consequential damages, or limitations on how long an implied warranty lasts, so the above exclusions and limitations may not apply to you.

This warranty gives you specific legal rights, and you may also have other rights which vary from state to state.

Countries Other than the United States or Canada

Customers who have purchased Toro products outside the United States or Canada should contact their Toro Distributor (Dealer) to obtain guarantee policies for your country, province, or state. If for any reason you are dissatisfied with your Distributor's service or have difficulty obtaining guarantee information, contact the Toro importer. If all other remedies fail, you may contact us at Toro Warranty Company.