Form No. 3310-465

TORO®

MODEL NOS. 37025, 37014,
37013, 37012, 37011

CROSS REFERENCE

GENERAL TRACTOR
(TRANSMISSION ASSEMBLY)

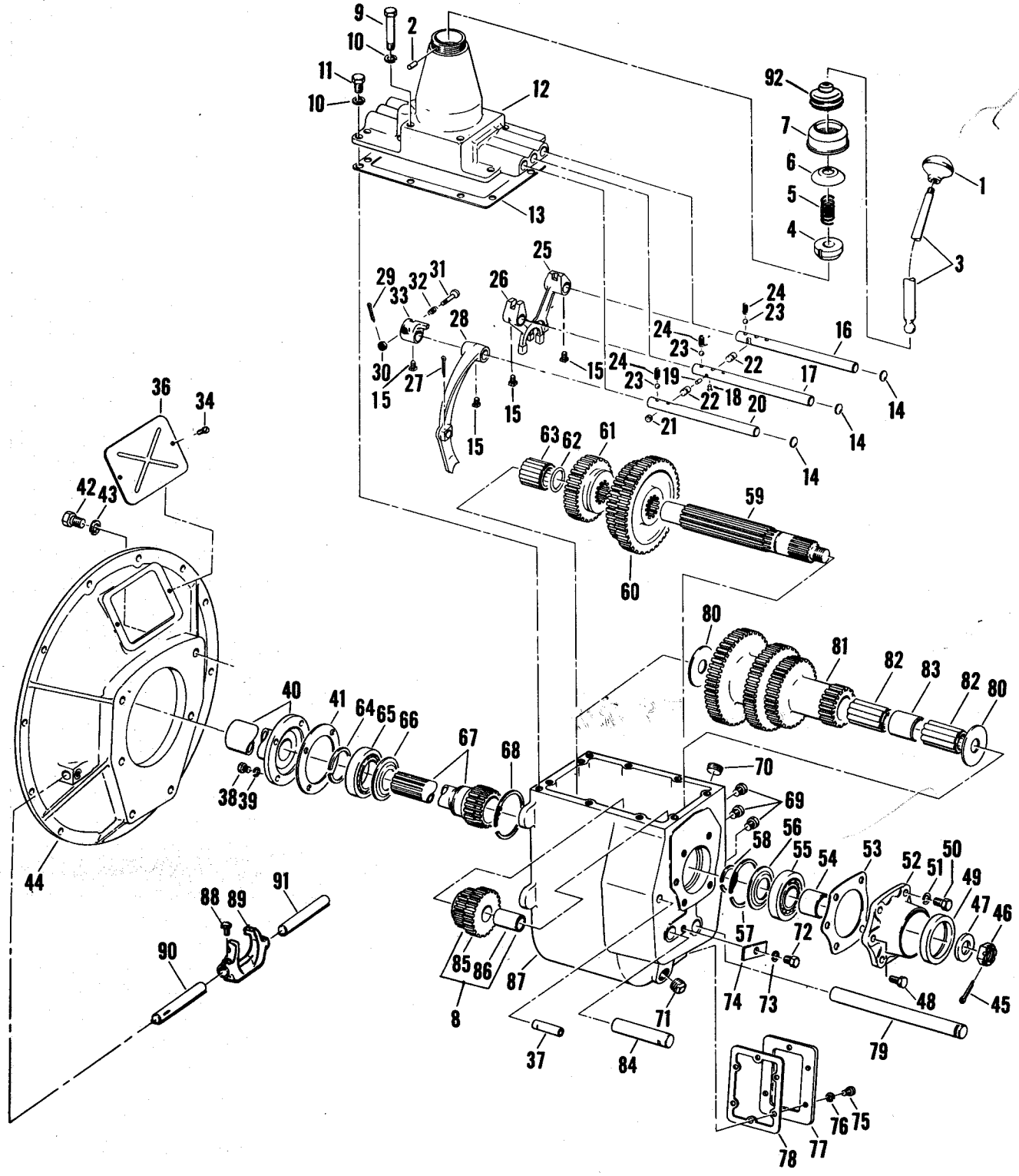

Copyright 1973 By
The Toro Company
Bloomington, Minnesota 55420 U.S.A.

TRANSMISSION ASSEMBLY

Ref. No.	Part No.	Description	Borg-Warner Part No.	No. Used
1	19-7580	Knob, Gear Shift	C37J-50A	1
2	19-7590	Pin, Retaining	4499A	1
3	19-7600	Lever, Gear Shift	AC9A-2	1
4	~~19-7810~~ 19-7610	Ball, Shift Lever	C8-2-½C	1
5	19-7620	Spring	4498B	1
6	19-7630	Cup, Spring Retaining	4497	1
7	19-7640	Cap, Lever Housing	4496K	1
8	19-7650	Reverse Gear and Bushing	AT9A-10	1
9	19-7660	Capscrew, Cover Retaining	190911	1
10	19-7670	Lockwasher	103321	18
11	19-7680	Capscrew, Cover Retaining	179838	5
12	19-7690	Cover, Shift Linkage	T8G-148A	1
13	19-7700	Gasket, Cover	T9-115	1
14	19-7710	Plug	103892	3
15	19-7720	Setscrew	4418B	3
16	19-7730	Rod, 1st & 2nd Gears	T8A-21	1
17	19-7740	Rod, 3rd & 4th Gears	T8A-20	1
18	19-7750	Pin, Retaining	4447	1
19	19-7760	Pin	4446A	1
20	19-7770	Rod, Reverse Gear	T8-99A	1
21	19-7780	Plug	X2850S	1
22	19-7790	Interlock Pawl	T8-86	2
23	19-7800	Ball, Detent	453593	3
24	19-7810	Spring, Detent	T8B-42	3
25	19-7820	Shift Fork, 1st & 2nd Gears	T8-24	1
26	19-7830	Shift Fork, 3rd & 4th Gears	T8-23	1
27	19-7840	Pin, Cotter	103386	1
28	19-7850	Shift Fork, Reverse Gear	T8-51	1
29	19-7860	Pin, Cotter	103361	1
30	19-7870	Nut, Spring Retaining	102643	1
31	19-7880	Plunger, Reverse Shift	T9A-40	1
32	19-7890	Spring	T9A-39	1
33	19-7900	Socket, Reverse Gear	T9A-37	1
34	19-7910	Screw, Plate Retaining	4776L	2
36	19-7930	Plate, Inspection	T9-74	1
37	19-7950	Rod, Reverse Fork Guide	T8-52	1
38	19-7960	Capscrew, Throw-Out Sleeve Retaining	179816	4
39	19-7970	Lockwasher	4801A	4
40	19-7980	Throw-Out Sleeve	T9-6H	1
41	19-7990	Gasket	T9-145	1
42	19-8000	Capscrew, Clutch Housing Retaining	179883	6
43	19-8010	Lockwasher	103323	6
44	19-8020	Clutch Housing	T9-1-½	1
45	19-8030	Pin, Cotter	103387	1
46	19-8040	Nut, Slotted	T9-50P	1
47	19-8050	Washer, Flat	T9-50-½G	1
48	19-8060	Capscrew (in item 52)	179847	1
49	19-8070	Oil Seal	T9-110	1
50	19-8080	Capscrew, Bearing Housing Retaining	179839	4
51	19-7670	Lockwasher	103321	5
52	19-8100	Bearing Housing	T9-7Z	1
53	19-8110	Gasket	T9-145-½	1
54	19-8120	Spacer	T9-75-½Y	1
55	19-8130	Bearing, Rear	B307A	1
56	19-8140	Grease Shield	T8-137	1
57	19-8150	Ring, Retaining	T8-7-½	1
58	19-8160	Ring, Retaining	T69-137	1
59	19-8170	Shaft, Output	T9-2G	1
60	19-8180	Gear, 1st & 2nd	T9-12W	1
61	19-8190	Gear, 3rd & 4th	T9A-11	1
62	19-8200	Retaining Ring	T8-25	1
63	19-8210	Bearing, Front, Inner	4919B	1
64	19-8220	Ring, Retaining	4495	1
65	19-8230	Bearing, Front	B-209A	1
66	19-8240	Grease Shield	T8-136	1
67	19-8250	Shaft, Clutch	L2-16D	1
68	19-8260	Ring, Retaining	T8-6-½	1
69	19-8270	Capscrew	X775	3
70	19-8280	Plug, Filler and Level	9409949	1
71	19-8290	Plug, Drain	444592, 444593, 444594 opt.	1
72	19-8300	Capscrew	179837	7
73	19-7670	Lockwasher	103321	1
74	19-8330	Plate, Lock	4501	1
75	19-8300	Capscrew, Cover Retaining	179837	6
76	19-7670	Lockwasher	103321	6
77	19-8090	Plate, Cover	T53-160B	1
78	19-8320	Gasket	T9-150	1
79	19-8340	Countershaft	T9-3P	1
80	19-8350	Thrust Washer	T9-30Y	2
81	19-8360	Cluster Gear	T8C-8A	1
82	19-8370	Bearing, Roller	4919C	2
83	19-8380	Spacer	T8-28A	1
84	19-8390	Shaft, Reverse Gear	T8-35	1
85	19-8400	Gear, Reverse	T9A-10	1
86	19-8410	Bushing, Reverse Gear	T8-85	1
87	19-8420	Housing, Transmission	T9-1YY	1
88	19-8430	Set Screw	5573	2
89	19-8440	Fork, Throw-Out Bearing	T64J-360D	1
90	19-8450	Shaft, Fork Linkage	T9-311XX	1
91	19-8460	Shaft, Fork Support	T9-310	1
92	3-6184	Dust Cover		1
	19-7570	Transmission Assembly Complete	T-9-C9A	1

Warner gear part numbers are listed for identification only. Obtain parts from Toro Distributor.