1963-67

TORO®

REFERENCE DRAWING AND PARTS LIST

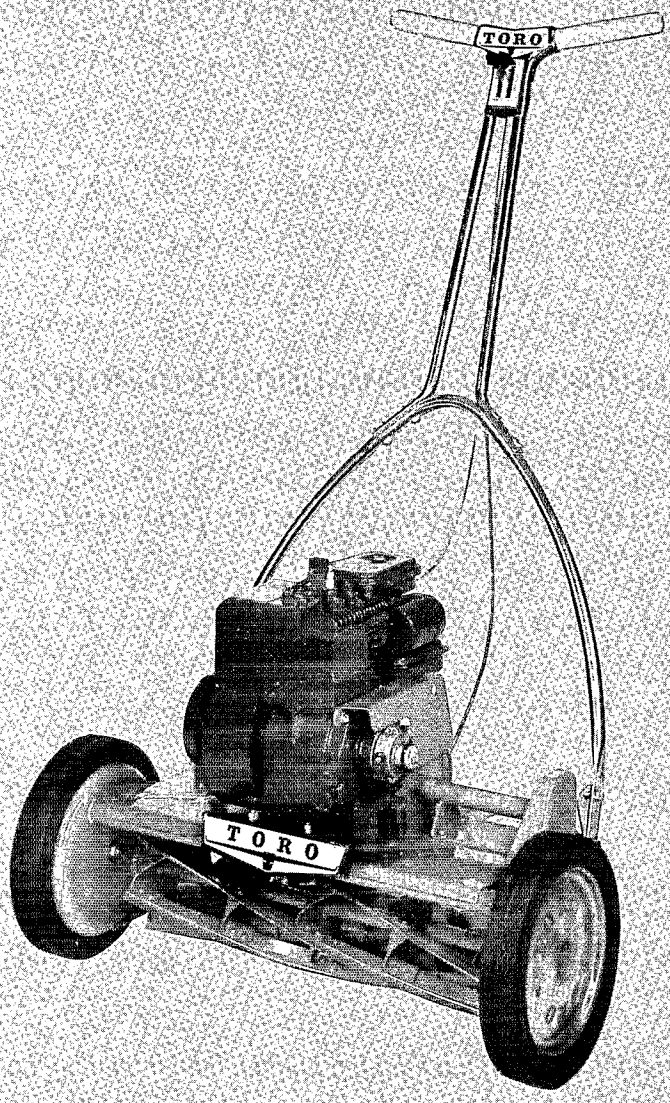

18" SPORTLAWN

MODEL NOS. 10013-101 & UP; 10013-400001 & UP; 10013-500001 & UP; 10013-600001 & UP; 10013-700001 & UP

21" SPORTLAWN

MODEL NOS. 10313-101 & UP; 10313-400001 & UP; 10323-400001 & UP;
10323-500001 & UP; 10323-600001 & UP; 10323-700001 & UP

Price 25 cents

18" and 21" MOWER DRAWING

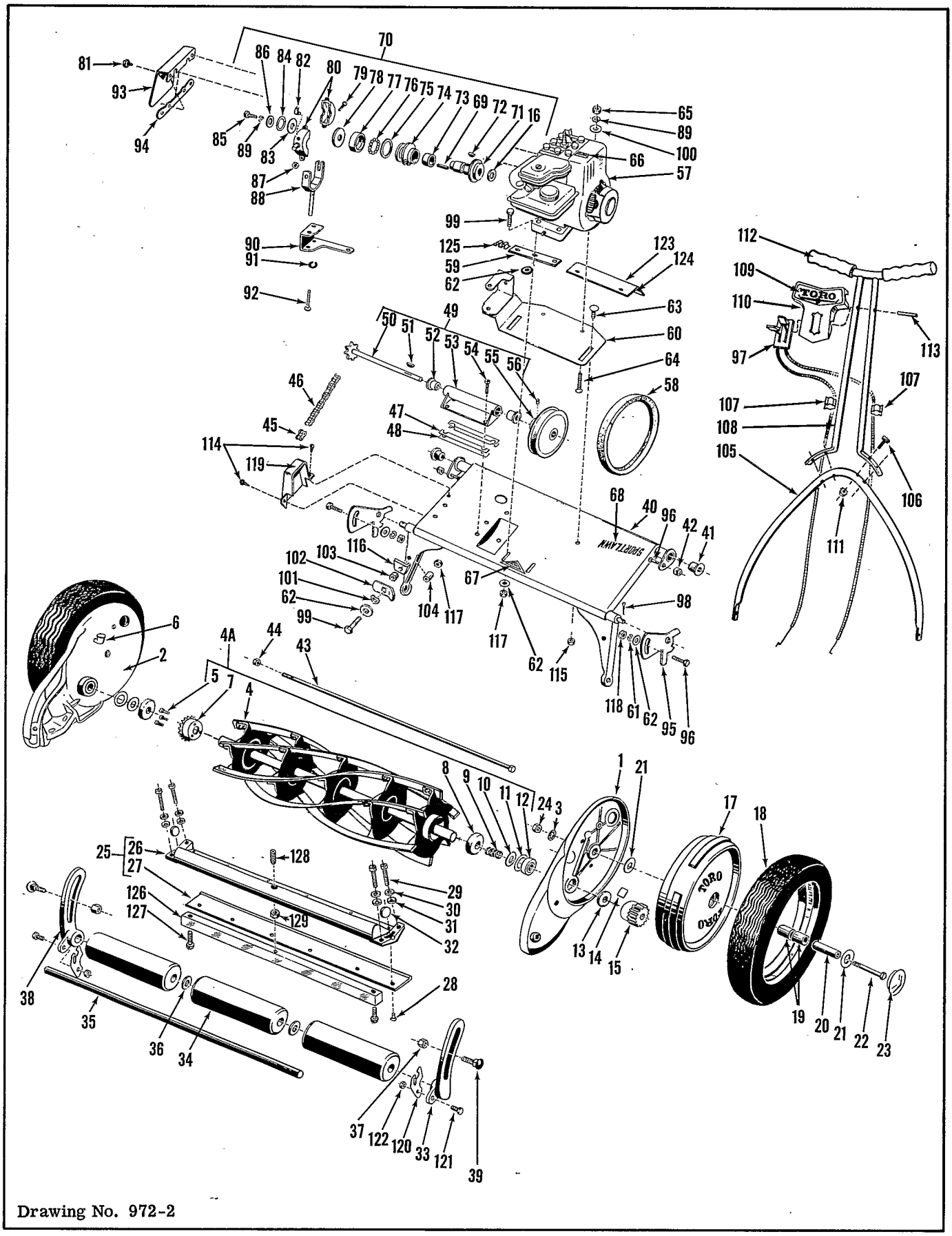

Drawing No. 972-2

COPYRIGHT 1955 BY TORO MANUFACTURING CORPORATION, MINNEAPOLIS, MINNESOTA, U.S.A.

18" and 21" MOWER PARTS LIST

Ref. No.	Part No.	Description	No. Used 18"	21"
1	3-7369	Side Plate Assy., Right consisting of Side Plate & Outer Bearing Race	1	1
2	3-7359	Side Plate Assy., Left consisting of Side Plate & Outer Bearing Race	1	1
3	3255-16	Lockwasher	2	2
4A	2-2459	Reel Assy., consisting of Blades, Spiders, Shaft, Brg. Cover, Sprocket, Thrust Washers, Dust Seals, Take-up Spring, Inner Brg. Races, Felt Washers & Steel Balls	1	
4A	2-6189	Reel Assy., consisting of Blades, Spiders, Shaft, Brg. Cover, Sprocket, Thrust Washers, Dust Seals, Take-up Spring, Inner Brg. Races, Felt Washers & Steel Balls		1
4	3-8322	Reel Assembly, 6 Blade	1	
4	3-7660	Reel Assembly, 6 Blade Low-Cut		1
*	3-8950	Reel Assembly, 5 Blade Hi-Cut		1
5	32140-6	Screw, Hi-Cut		3
5	32140-16	Screw, Low-Cut	3	3
6	301-2	Oiler	2	2
7	3-3065	Reel Sprocket		1
*	5-1572	Reel Sprocket	1	
8	5-1518	Felt Washer, Inner	2	2
9	3-3081	Spring, Bearing Take-up	1	1
10	5-1078	Thrust Washer	2	2
11	5-1520	Seal	2	2
12	251-30	Bearing, Reel	2	2
13	5-1522	Felt Washer, Outer	2	2
14	2-3620	Dog, Ratchet	2	2
15	2-2209	Pinion Kit, consisting of Right and Left Pinions and Dogs	1	1
16	5-1574	Washer	1	
17	3-7389	Wheel Assembly with Bushings (4) Ref. 19	2	2
18	4-2580	Tire	2	2
*	3-3668	Tire (Hi-Cut Model)		2
19	256-32	Bushing, Wheel	4	4
20	5-1521	Spindle, Wheel	2	2
21	5-0744	Washer, Wheel Spindle	4	4
22	5-1513	Bolt, Wheel Spindle	2	2
23	3-4007	Plug Button	2	2
24	3220-4	Nut	2	2
25	3-9060	Bed Knife & Bed Bar Assy. (21 Low-Cut model only)		1
*	3-7429	Bed Knife & Bed Bar Assy.	1	
*	3-9070	Bed Knife & Bed Bar Assy. (21" Hi-Cut model only)		1
26	5-1543	Bed Bar	1	
26	5-1523	Bed Bar		1
27	5-1544	Bed Knife	1	
27	5-1514	Bed Knife (Low-Cut Model)		1
*	3-3068	Bed Knife (Hi-Cut Model)		1
28	3290-57	Rivet, Bed Knife	6	
*	3290-57	Rivet, Bed Knife (Low-Cut)		7
*	3290-50	Rivet, Bed Knife (Hi-Cut)		7
29	5-1497	Adjusting Screw	4	4
30	5-1515	Washer, Upper Spherical	4	4
31	5-1516	Washer, Lower Spherical	4	4
32	5-1517	Pivot, Bed Bar	2	2
*	2-3969	Roller Bracket Set, Ref. Nos. 33 & 38	1	1
33	3-3848	Roller Bracket, Right	1	1
34	5-1553	Roller Section	3	
34	5-1511	Roller Section		3
35	5-1554	Roller Shaft	1	
35	5-1510	Roller Shaft		1
36	3256-6	Washer	2	2
37	5-1505	Nut	2	2
38	3-3847	Roller Bracket, Left	1	1
39	3-7253	Carriage Bolt	2	2
40	5-1541	Motor Platform	1	
40	5-1586	Motor Platform		1
41	3-4327	Spacer Tube End	2	2
42	32146-4	Nut	2	2
43	5-1542	Tie Rod	1	
43	5-1502	Tie Rod		1
44	32146-6	Nut	1	1
45	2710-21	Link Connecting	1	1
46	5-1552	Chain, Drive	1	1
47	5-1498	Shim	2	
48	5-1500	Shim	2	
48	5-1588	Shim (Low-Cut)		6
49	3-7439	Countershaft Assembly	1	
49	3-7449	Countershaft Assembly		1
50	5-1551	Countershaft & Sprocket	1	
50	5-1587	Countershaft & Sprocket		1
51	3257-5	Key	1	1
52	3-4066	Bushing	2	2
53	3-7459	Countershaft Housing	1	
53	3-7469	Countershaft Housing		1
54	32113-18	Screw	4	4
55	5-1494	Pulley	1	1
56	3245-1	Set Screw	2	2
57	221-90	Engine, B & S #61102	1	1
58	271-17	V-Belt	1	1
59	3-4064	Shim	1	1
60	3-5780	Clutch Mounting Plate	1	1
61	3253-4	Lockwasher	2	2
62	3256-23	Washer	8	8
63	3230-1	Bolt	2	2
64	3289-10	Screw	2	2
65	3219-1	Nut	2	2
66	3-7644	Decal	1	1
67	5-1426	Decal	1	1
68	3-5648	Decal	1	
*	3-5652	Decal (Low-Cut)		1
*	3-5651	Decal (Hi-Cut)		1
69	5-1077	Key, Square	1	1
70	2-3029	Clutch Assembly	1	1
71	5-1558	Clutch Body Assembly	1	1

* Not Illustrated

(Continued next page)

Ref. No.	Part No.	Description	No. Used 18"	No. Used 21"
72	3257-1	Key	1	1
73	5-1546	Idler Bushing	1	1
74	5-1545	Sliding Flange	1	1
75	5-1548	Thrust Washer	1	1
76	255-5	Steel Ball	18	18
77	5-1547	Shift Collar	1	1
78	5-1226	Washer	1	1
79	3250-4	Screw	2	2
80	2-3049	Slip Ring Kit	1	1
81	32140-39	Screw	2	2
82	5-1555	Oil Cup	1	1
83	5-1550	Check Washer	1	1
84	32120-14	Snap Ring	1	1
85	329-4	Screw	1	1
86	4-8620	Washer	1	1
87	3296-1	Nut	2	2
88	3-5360	Shift Fork Assembly	1	1
89	3253-3	Lockwasher	3	3
90	3-4028	Bracket, Shift Fork	1	1
91	32120-35	Snap Ring	2	2
92	3-4031	Pivot Shaft	1	1
93	3-7661	Guard, Belt	1	1
94	3-7658	Bracket, Belt Guard	1	1
95	5-1535	Bracket, Handle Stop	2	2
96	3210-3	Screw	4	4
97	3-8370	Control Assembly Clutch & Throttle	1	1
98	3272-11	Cotter Pin	2	2
99	3210-15	Screw	4	4
100	3256-2	Washer	2	2
101	3290-213	Spring Washer	2	2

Ref. No.	Part No.	Description	No. Used 18"	No. Used 21"
102	5-1536	Lever, Handle Stop	2	2
103	5-1557	Spacer	2	2
104	5-1537	Spacer	2	2
105	3-5597	Lower Handle	1	
105	3-5598	Lower Handle		1
106	3-2654	Special Bolt	4	4
107	218-75	Clip	2	2
108	3-8340	Upper Handle W. A.	1	1
109	3-5707	Decal, Handle	1	1
110	3-5595	Cover Plate	1	1
111	32149-2	Nut, Keps	4	4
112	5-1994	Handle Grip	2	2
113	32121-10	Roll Pin	1	1
114	32140-32	Screws, Self Tap	2	2
115	32146-5	Nut	2	2
116	5-1540	Clip, Left	1	1
*	5-1538	Clip, Right	1	1
*	225-2	Spark Plug	1	1
117	32146-4	Nut	4	4
118	3219-2	Hex Nut	2	2
119	3-5593	Guard, Chain	1	1
120	3-3856	Grasscatcher Hook	2	2
121	329-3	Screw	2	2
122	32146-1	Nut	2	2
123	3-5601	Decal	1	1
124	3-5602	Name Plate	1	1
125	3290-222	Clip, Tinnerman	1	1
126	3-5968	Adjusting Bar		1
127	3290-143	Screw		2
128	3245-9	Set Screw		1
129	32127-24	Nut		1

* Not Illustrated

Briggs and Stratton

Engine, No. 61102,

Recoil Start (Part 1)

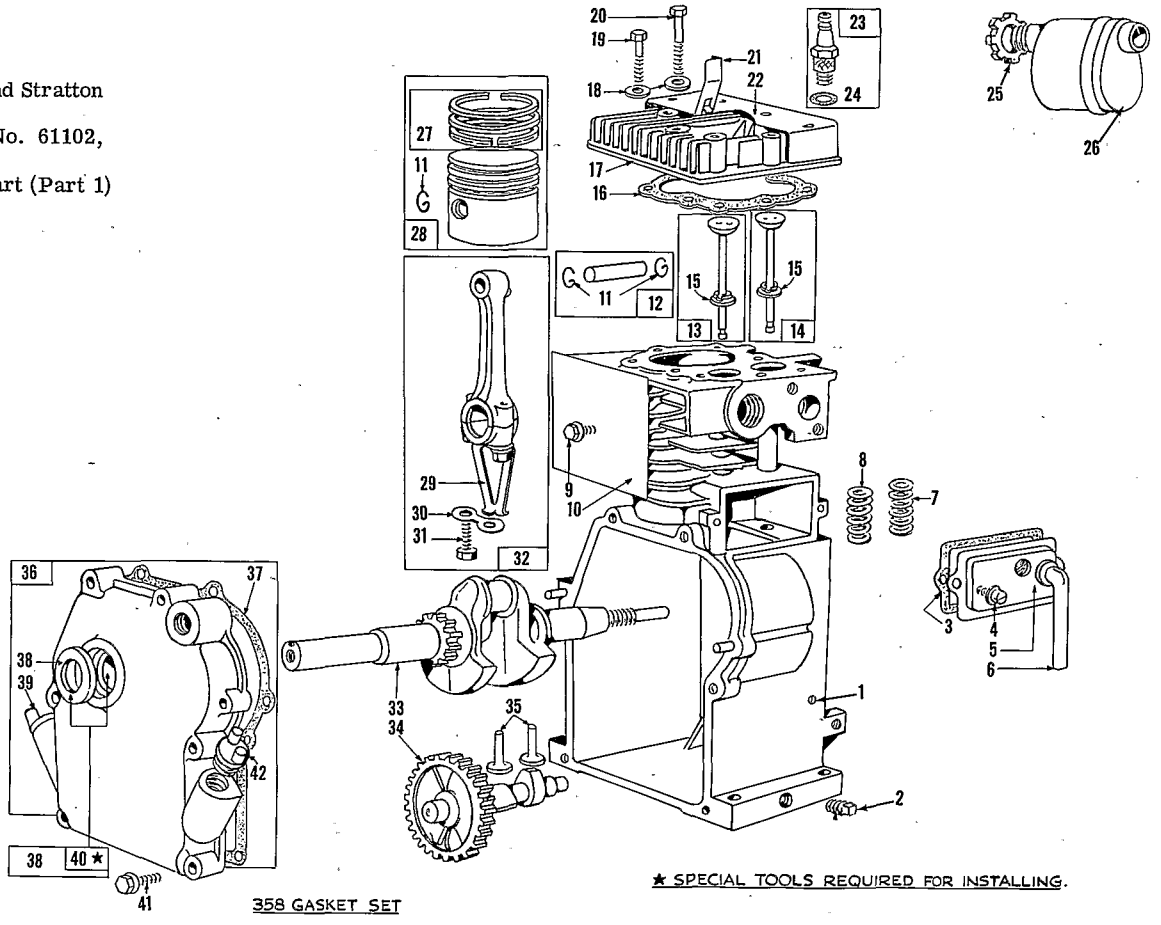

358 GASKET SET

★ SPECIAL TOOLS REQUIRED FOR INSTALLING.

Drawing No. 111-4

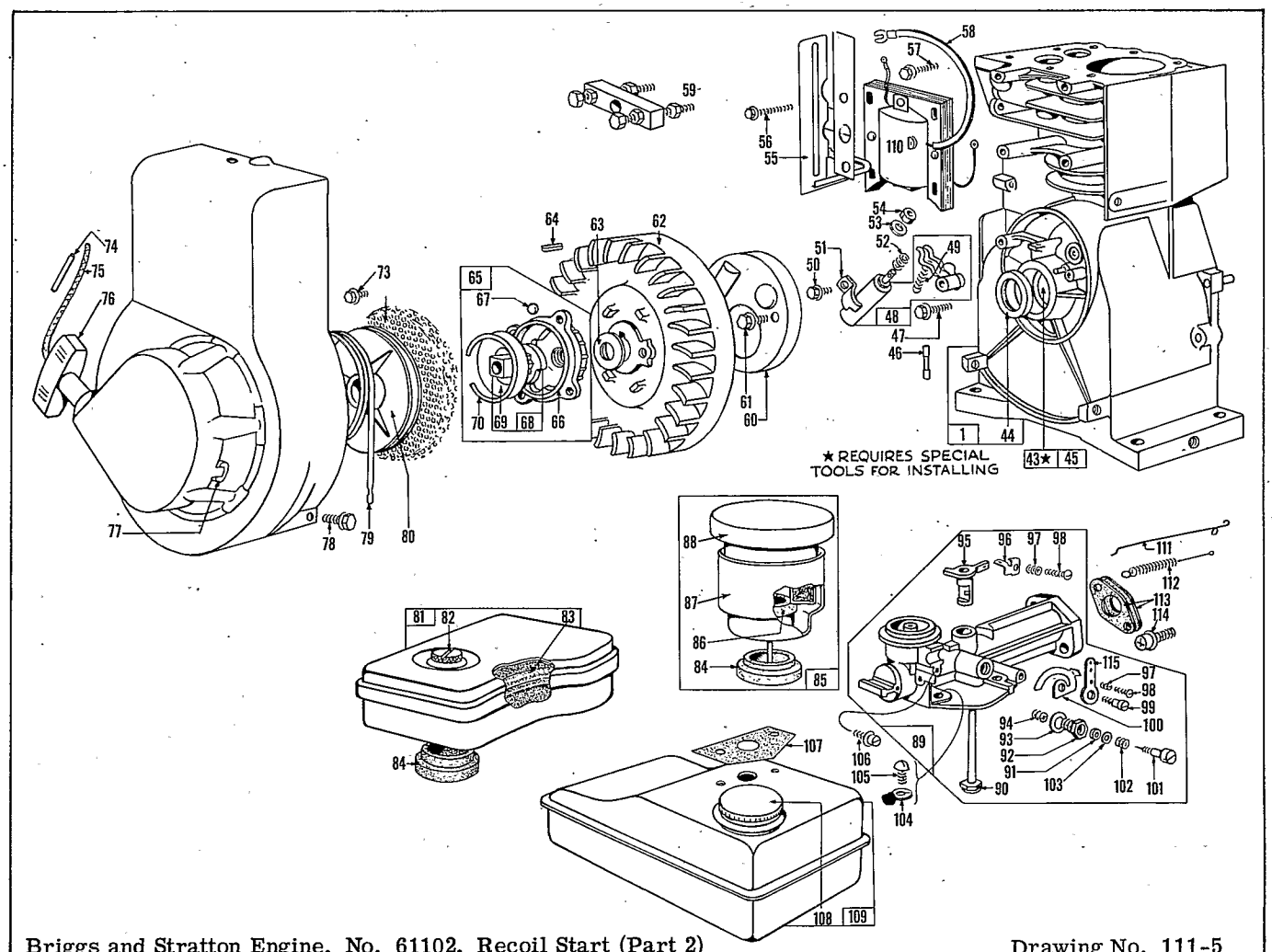

Briggs and Stratton Engine, No. 61102, Recoil Start (Part 2) Drawing No. 111-5

ENGINE PARTS LIST

Ref. No.	Part No.	Description	No. Used
1	295460	Cylinder Assy. Used on Model 61100 Series engines after Serial No. 5810030	1
	295469	Cylinder Assy. Used on Model 61100 Series engines before Serial No. 5810060	1
2	91249	Pipe Plug $\frac{1}{4}$" std.	1
3	27549	Gasket, Valve Cover	1
††4	92870	Screw, Sems	2
5	294178	Breather, Valve Chamber	1
6	66638	Tube, Breather	1
7	260552	Spring, Intake Valve	1
8	26478	Spring, Exhaust Valve	1
9	93042	Screw, Cyl. Shield	1
10	220478	Shield, Cylinder	1
11	26026	Lock, Piston Pin	2
12	291925	Pin Assy., Std.	1
13	296676	Valve, Exhaust	1
14	296677	Valve, Intake (Used after Serial No. 5810030)	1
		Note: No. 23386 Valve Intake used on engines before Serial No. 5810060	
15	93312	Retainer, Valve Spring	2
		Note: 23184 Retainer-Valve Spring	2
		No. 23187 Pin-Valve Spring Retainer used with valves with hole in stem	2
†16	27670	Gasket, Cyl. Head (Used after Serial No. 5810030)	1
		Note: No. 27548 Gasket used on engines before Serial No. 5810060	
17	210475	Head, Cylinder (Used after Serial No. 5810030)	1
		Note: No. 210209 Head is used on engines before Serial No. 5810060	
18	22963	Washer, Plain	8
19	91386	Screw, Cyl. Head 2" Lg.	5

††Included in Gasket Sets No's. 294244 and 293525
†Included in Gasket Set No. 294244

PARTS LIST (Cont'd)

Ref. No.	Part No.	Description	No. Used
20	92674	Screw, Cyl. Head -2-3/8" Lg	3
21	220884	Switch, Stop	1
22	220581	Cover, Cyl. Head	1
23	29693	Spark Plug w/gasket	1
24	29806	Gasket, Spark Plug	1
25	220859	Locknut, Muffler	1
26	294441	Muffler, Exhaust	1
27	295657	Ring Set, Standard Piston	1
		Used on Model 61100 Series after Serial No. 5810030, consists of No.	
		210796 Ring, Piston, Compression, Top, Std.	1
		No. 210797 Ring, Piston Compression, Ctr., Std.	1
		No. 295661 Ring, Oil (w/expander) Std.	1
		Note: No. 295649 Ring Set-Standard Piston Used on Model 61100 Series before Serial No. 5810060, consists of:	
		No. 210788 Ring, Piston, Compression, Top, Std.	1
		No. 210789 Ring, Piston Compression, Ctr., Std.	1
		No. 295653 Ring, Oil (w/expander) Std.	1
	295658	Ring Set-.010" O.S. Piston	1
		Used on Model 61100 Series after Serial No. 5810030, Consists of:	
		No. 210799 Ring, Piston Compression, Top, .010" O.S.	1
		No. 210798 Ring, Piston Compression, Ctr., .010" O.S.	1
		No. 295662 Ring, Oil (w/expander) .010" O.S.	1
		Note: No. 295650 Ring Set .010" O.S. Piston Used on Model 61100 Series before Serial No. 5810060, consists of:	
		No. 210790 Ring, Piston Compression, Top, .010" O.S.	1
		No. 210791 Ring, Piston Compression, Ctr., .010" O.S.	1
		No. 295654 Ring, Oil (w/expander) .010" O.S.	1
	295659	Ring Set-.020" O.S. Piston	1
		Used on Model 61100 Series after Serial No. 5810030, consists of:	
		No. 210801 Ring, Piston, Compression, Top, .020" O.S.	1
		No. 210800 Ring, Piston, Compression, Ctr., .020" O.S.	1
		No. 295663 Ring, Oil (w/expander) .020" O.S.	1
		Note: No. 295651 Ring Set-.020" O.S. Used on Model 61100 Series before Serial No. 5810060, consists of:	
		No. 210792 Ring, Piston Compression, Top,.020" O.S.	1
		No. 210793 Ring, Piston, Compression, Ctr., .020" O.S.	1
		No. 295655 Ring,Oil w/expander) .020" O.S.	1
	295660	Ring Set-.030" O.S. Piston	1
		Used on Model 61100 Series after Serial No. 5810030, consists of:	
		No. 210803 Ring, Piston, Compr'n Top, .030" O.S.	1
		No. 210802 Ring, Piston Compression, Ctr., .030" O.S.	1
		No. 295664 Ring, Oil (w/expander) .030" O.S.	1
		Note: No. 295652 Ring Set-.030" O.S.	1
		Used on Model 61100 Series before Serial No. 5810060, consists of:	
		No. 210794 Ring, Piston, Compression, Top, .030" O.S.	1
		No. 210795 Ring, Piston, Compression, Ctr., .030" O.S.	1
		No. 295656 Ring, Oil (w/expander) .030" O.S.	1
28	295455	Piston Assy., .010" O.S.	1
		No. 295455 Piston Assy. Std. (for 2-3/8" Bore)	1
		Used on Model 61100 Series after Serial No. 5810030	
	295479	Piston Assy. Std. (for 2-5/16" Bore)	1
		Used on Model 61100 Series before Serial No. 5810060	1
	295456	Piston Assy., -.010" O.S. (for 2-3/8" Bore)	1
		Used on Model 61100 Series after Serial No. 5810030	
	295480	Piston Assy., .010" O.S. (for 2-5/16" Bore)	1
		Used on Model 61100 Series before Serial No. 5810060	1
	295457	Piston Assy. -.020" O.S. (for 2-3/8" Bore)	
		Used on Model 61100 Series after Serial No. 5810030	

Engine part numbers are listed for identification purposes only.
See your local Briggs and Stratton dealer for purchase of parts.

PARTS LIST (Cont'd)

Ref. No.	Part No.	Description	No. Used
	295481	Piston Assy., .020" O.S. (for 2-5/16" Bore) Used on Model 61100 Series before Serial No. 5810060	1
	295458	Piston Assy. -.030" O.S. (for 2-3/8" Bore) Used on Model 61100 Series after Serial No. 5810030	1
	295482	Piston Assy., .030" O.S. (for 2-5/16" Bore) Used on Model 61100 Series before Serial No. 5810060	1
29	220459	Dipper, Connecting Rod	1
30	220460	Lock Conn. Rod Screw	1
31	92296	Screw, Conn. Rod	2
32	294300	Connecting Rod, Assy. (including Ref. No.'s 29/30 & 31)	1
33	260228	Crankshaft	1
34	210453	Gear, Cam	1
35	230173	Tappet, Valve	2
36	294305	Cover, Assy. - Crankcase	1
††37	27586	Gasket, Crankcase .015" Thick, Std.	1
††37	27617	Gasket, Crankcase .005" Thk.	1
††37	27618	Gasket, Crankcase .009" Thk.	1
38	89660	Seal, Oil w/Ref. No. 40	1
39	66768	Plug-Oil Filler	1
★40	293708	Bushing, Crankcase Cover	1
41	93032	Screw, Crankcase Cover, Sems	6
42	66768	Plug, Oil Filler	1
43	293708	Bushing, Cyl.	1
44	89960	Seal, Oil	1
45	89960	Seal, Oil w/Ref. 43	1
46	65704	Plunger, Breaker Point	1
47	93117	Screw, Breaker Arm Sems	1
48	294628	Breaker Points and Condenser Set w/Ref. Nos. 49	1
49	26018	Spring, Breaker Arm	1
50	93042	Screw, Sem	1
51	220477	Clamp, Condenser	1
52	260374	Spring, Connector (Condenser Post)	1
53	92813	Shakeproof Lockwasher	1
54	92987	Nut, Cond. Terminal	1
55	294298	Blade, Governor	1
56	92984	Screw, Sems	3
57	93117	Screw, Sems	1
58	292149	Cable, Ignition	1
59	19069	Puller, Flywheel (Optional Accessory)	1
60	220366	Cover, Condenser	1
61	93014	Screw, Sem, Dust Cover	2
62	295936	Flywheel Assy.	1
63	220865	Washer, Spring	1
64	61760	Key, Flywheel	1
65	296468	Clutch Assy., Rewind Starter	1
66	210400	Housing, Starter Clutch	1
67	63770	Ball, Clutch	4
68	296597	Ratchet, Rewind Starter	1
69	221301	Washer, Clutch Retainer Used with Square Shank Ratchet Note: No. 220575 Washer-Clutch Retainer Used with 7 point shank ratchet	1
70	26032	Spring, Clutch Retainer	1
71	93042	Screw, Sem	4
72	220648	Screen, Starter Pulley	1
73	294260	Housing, Blower (Rewind Str.)	1
74	230228	Pin, Starter Grip	1
75	63384	Rope, Starter (47-1/8" Long)	1
76	66728	Grip, Starter Rope	1
77	66528	Bumper, Starter Pulley	2
78	93158	Screw, Sem-Blower Hsg.	3
79	294303	Spring, Rewind Starter	1
80	294088	Pulley, Rewind Starter	1
■81	296767	Air Cleaner Assembly	1
■82	93322	Screw, Air Cleaner	1
■83	27987	Element, Air Cleaner	1
■††84	27660	Gasket, Air Cleaner	1
85	294870	Air Cleaner Assy. w/Mtg. Stud	1
86	27795	Gasket, Air Cleaner	1
87	293991	Bowl, Air Cleaner	1
88	294861	Cover and Filter w/Stud	1
89	295281	Carburetor Assy (Manual Choke)	1
90	296476	Pipe, Fuel (Used to replace Plastic pipes)	1
90	293700	Pipe, Fuel (Used to replace Brass pipes)	1
91	65978	Packing, Needle Valve	1
92	23431	Nut, Needle Valve	1
93	65787	Gasket, Needle Valve	1
94	23432	Seat, Needle Valve	1
95	210721	Throttle, Carburetor	1
96	220105	Connector, Governor Link	1
97	260575	Spring, Speed & Throttle Adj.	2
98	92634	Screw, 5-40 x 5/8" R.H.	2
99	230030	Screw, Carb. Cam & Lever	1
100	220107	Cam, Speed Adjuster	1
101	23433	Valve, Needle	1
102	26336	Spring, Needle Valve	1
103	22235	Washer, Needle Valve	1
104	92290	Lockwasher #10 x 1/16" x 3/64"	2
105	93124	Screw, Fuel Tank Mtg.	2
106	93263	Screw, 10-32 x 3/8" Fill. Hd.	1
††107	27404	Gasket, Fuel Tank Mtg.	1
108	69221	Cap, Fuel Tank	1
109	291834	Fuel Tank Assembly	1
110	291617	Armature, Magneto	1
111	260155	Link, Governor	1
112	260041	Spring, Governor	1
††113	27355	Gasket, Intake Elbow	1
114	93329	Screw, Sem-Carb. Mtg.	4
115	220949	Lever, Speed Adj.	1
*	294244	Gasket Set (used on engines after Serial No. 5810030	1
*	293525	Gasket Set (used on engines before Serial No. 5810060	1

†† Included in Gasket Set No. 294244 for 293525

† Included in Gasket Set No. 293525

*Not Illustrated

★ Special tools required for installing

■ Optional equipment

TORO POWER MOWERS

Toro power mowers and Power Handle implements are designed and built to give years of precision performance . . . to make them "the best you can buy." And there's over 50 years of manufacturing experience to back them up.
One of Toro's most important objectives — and one which has helped make Toro the world's largest manufacturer of power mowers — is to provide the customer with complete local service and parts. This Toro has done through an extensive chain of service dealers, factory-trained to give you the most careful, competent care for your Toro work-saver.

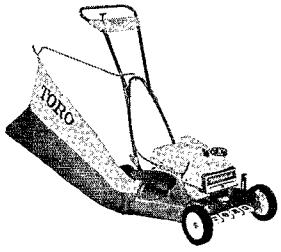

19" WHIRLWIND

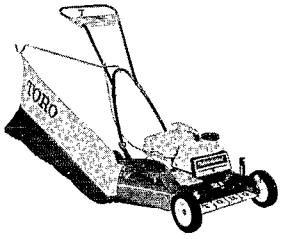

21" HAND PROPELLED WHIRLWIND

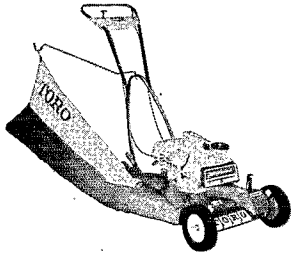

21" POW-R-DRIVE WHIRLWIND


21" HEVI-DUTY WHIRLWIND HAND PROPELLED


21" HEVI-DUTY WHIRLWIND SELF PROPELLED

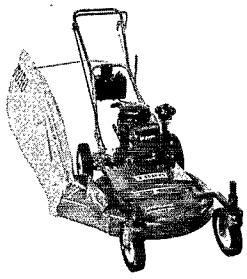
25" HEVI-DUTY WHIRLWIND

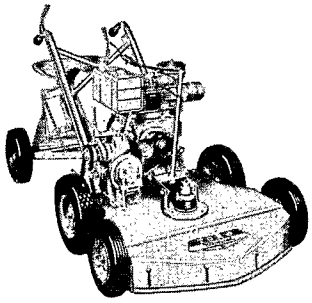
31" WHIRLWIND

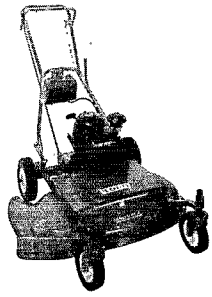
34" HEVI-DUTY WHIRLWIND

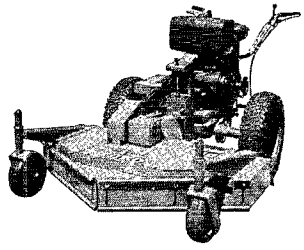
50" TROJAN

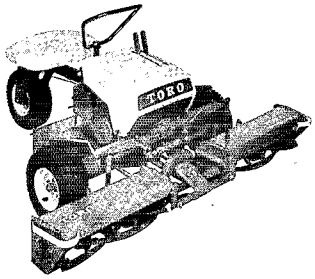

58" PROFESSIONAL

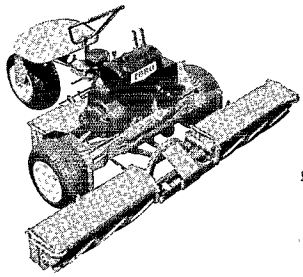
70" PROFESSIONAL

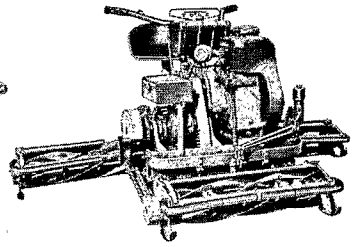
76" PROFESSIONAL

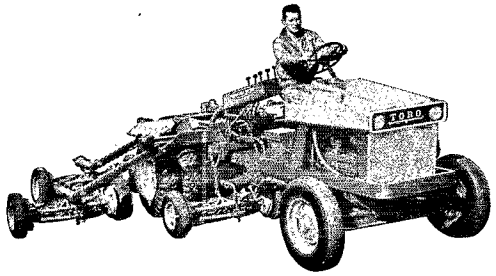

7 UNIT HYDRAULIC PARKMASTER

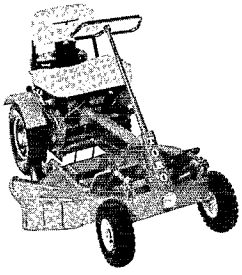
BIG RED

Reel Mower or Rotary Mower . . . Self Propelled or Riding Mower . . . Whatever your preference in Power Mowers, Toro makes a model to fit your needs. Choose from Toro's complete line of fine mowing equipment.

Toro has a mower that's just right for you. And Toro Mowers are the best you can buy!

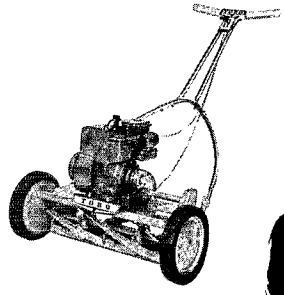
21" SPORTLAWN

TORO MANUFACTURING CORPORATION – Minneapolis, Minnesota 55420. U.S.A.

). 972–1

LITHO IN U. S. A.

TORO *Builds the right Power Mower for every need!*