TORO

OWNER'S OPERATING AND PARTS MANUAL



24" S.P.

SERIAL NOS. 25006–101 AND UP

Price 25 cents

TO THE TORO OWNER

This Owner Manual has been especially prepared for your information and guidance in the operation and care of your new Toro 24" Rotary.

Properly operated and maintained, this Toro 24" will respond quickly and easily to every reasonable demand and give years of reliable service.

Toro 24" mowers are manufactured by an organization of mowing machinery specialists. Each machine is carefully inspected and tested before leaving the factory. For best performance from your Toro 24" Rotary, study this manual for regular maintenance procedures.

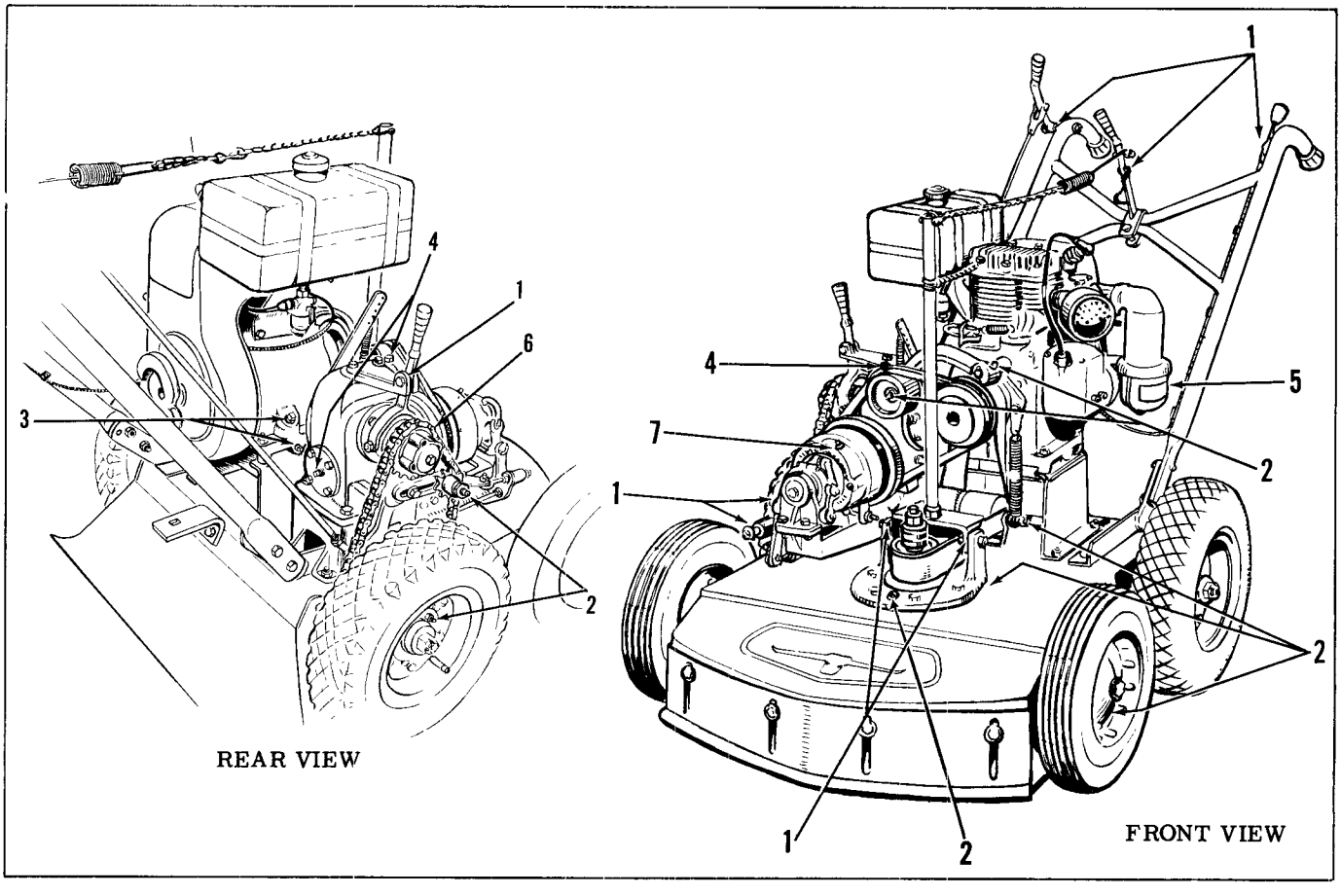

REAR VIEW

FRONT VIEW

1. PIVOT POINTS AND CONTROL CASING: Use lubricating oil, oil daily.

2. ZERK FITTINGS: Use a good grade of gun grease; grease after every 48 operating hours. CAUTION: Do not use too much grease. Two or three shots from gun is ample.

3. ENGINE: Use a good grade of S.A.E. #20 motor oil; check oil level after every four hours of running. If oil is below filler opening, fill up to proper level. Study engine manual for further instructions.

4. SPEED REDUCER: Use a good grade of S.A.E. #140 gear oil. Check oil level of the speed reducer twice a season. Remove small plug on bearing cap. If oil flows out, no more is needed. If no oil flows, remove filler plug on top of reducer housing and add oil to bring it up to the proper level. To drain, remove top plug and drain plug. (Not oil level plug)

5. AIR CLEANER: Fill to level mark. Use a good grade of S.A.E. #20 motor oil; change after each 25 operating hours, more often under dusty conditions. Study engine manual for further instructions.

7. REVERSE ATTACHMENT: Use a good grade of S.A.E. #140 gear oil; check periodically. To fill reverse housing, turn pipe plug to top, remove lower plug to check oil level. Remove top plug and fill till oil runs out of lower hole. To drain, remove both plugs and turn one to bottom.

SPECIFICATIONS

ENGINE: Wisconsin AKN, 6 H.P. at 3200 R.P.M. and Wisconsin BKN

FUEL TANK CAPACITY: 1 gallon

CUTTER BAR CLUTCH: Tight slack flat belt

TRACTION CLUTCH: Rockford #LMS-114 Disc and jaw type clutch on speed reducer output.

CUTTER BAR DRIVE: 1-1/4" flat belt on 3" O. D. pulleys from engine.

CUTTER BAR: 3/8" thick arm with hardened blades riveted to ends. 24" long assembled.

TRACTION DRIVE: "A" Section Industrial heavy duty "V" belt on 2.76 P.D., 3.63 P.D. or 4.32 P.D. engine pulley to 6.32 P.D., 5.32 P.D. or 4.76 P.D. pulley on speed reducer. 5/8 pitch x 1/4" wide roller chain on 17 T. and 48 T. sprockets from speed reducer.

REDUCTION, ENGINE TO WHEELS: 64.2:1, 41.1:1, or 31:1, depending on pulley groove selected, including 10:1 reduction in speed reducer.

WHEELS: #14 Ga. Steel Disc

TIRES: Front - 12 x 3.00 Semi Pneumatic
Rear - 4.00 x 7 Pneumatic

DIFFERENTIAL: Enclosed, Bevel gear

GROUND SPEED: 2 MPH, 3 MPH or 4 MPH, depending on engine pulley groove selected.

HEIGHT OF CUT: 1" to 4" adjusted by spacers on cutter bar shaft.

WIDTH OF CUT: 24"

HOUSING: Fabricated of 3/16" steel plate and welded into one unit. Adjustable front guard. Hinged rear guard.

HANDLE: $1\frac{1}{4}$ O.D. x #13 Ga. welded steel tubing.

DIMENSIONS: Width 32"
Length 60" Including handle
Height 36"

WEIGHT: 357 pounds w/o reverse
387 pounds with reverse

OPTIONAL EQUIPMENT: Sulky, Leaf Mulcher, Reverse Unit, Wheel Weights and Electric Start (Battery).

REVERSE UNIT: Enclosed bevel gear mounted on speed reducer input shaft.

Every piece of equipment is in perfect working condition before leaving the factory and will, when properly operated, perform the work for which it is recommended.

Should any parts, within three months from date of purchase, prove defective, new parts will be furnished, free of charge, f.o.b. factory, if the broken parts are returned to us for inspection.

We reserve the right to make improvements and changes in the machine in this manual without notice.

IMPORTANT ORDERING INSTRUCTIONS

Repair parts are available from your TORO distributor or service dealer.

To insure getting correct parts without delay, please furnish the following information:

1. Serial number of your mower as shown on the name plate.
2. Part number, description and quantity of each part required.
3. State whether parts should be shipped by mail or express. All repair parts are shipped F.O.B. factory.
4. Name and address where parts are to be shipped.
5. Do not order by reference number; use part number only.

COPYRIGHT, 1955 BY
TORO MANUFACTURING CORPORATION
OF MINNESOTA

—OPERATING INSTRUCTIONS—

HANDLE

The screws for mounting the handle to your new 24" S.P. will be found in the plastic bag attached to the mower.

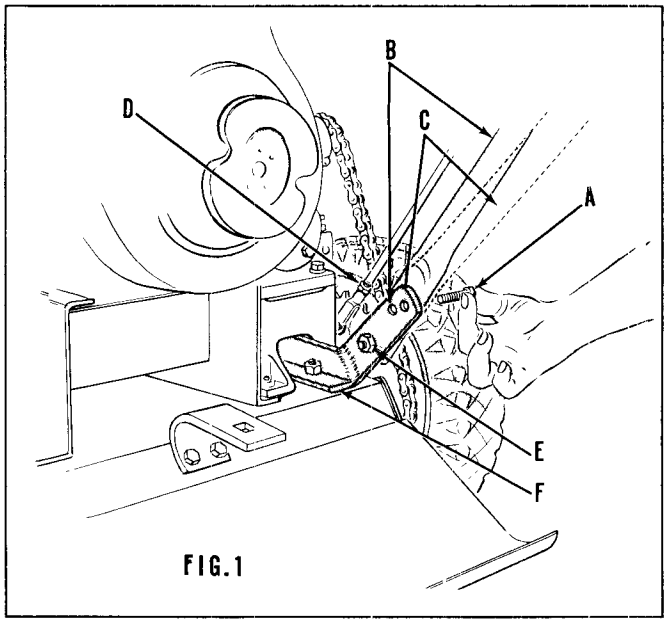

FIG.1

In Figure 1 you will note that there are three holes in the handle bracket "F." First insert the pivot screw "E" as shown. Then there are the two height adjustment holes "B" and "C." By placing screw "A" into the upper hole "C" the handle will be in the low position; if inserted into the lower hole "B" the handle will be in the high position. Set the handle at the most convenient height and tighten the screws securely.

Clutch rod "D" is used to connect the clutch rod handle to the lever arm on the mower. IT IS IMPORTANT THAT ITS LENGTH BE PROPERLY ADJUSTED TO SUIT THE HANDLE HEIGHT YOU HAVE SELECTED. Lock cotter key after checking clutch lever rod adjustment.

If at anytime it is desired to change the height of the mower handle, disconnect the clutch rod "D" in Figure 1 from the clutch lever arm, loosen the four screws holding the handle to the brackets and set the handle in its new position. Then tighten the screws again. Then the clutch rod "D" must be adjusted to a new length.

THROTTLE CONTROL

The throttle wire and casing, with finger lever attached, will be found wrapped around the engine. UNWRAP CAREFULLY SO AS NOT TO KINK IT. Attach the throttle control lever to the mower handle, using the 2 screws and lockwashers found in the plastic bag attached to the mower. Down the handle are three tapped holes. Attach the screws and clips found in the bag and place the control wire casing under the clips and tighten the screws. The loop in the casing from the handle to the engine should not be kinked.

FLAT BELT ADJUSTMENT

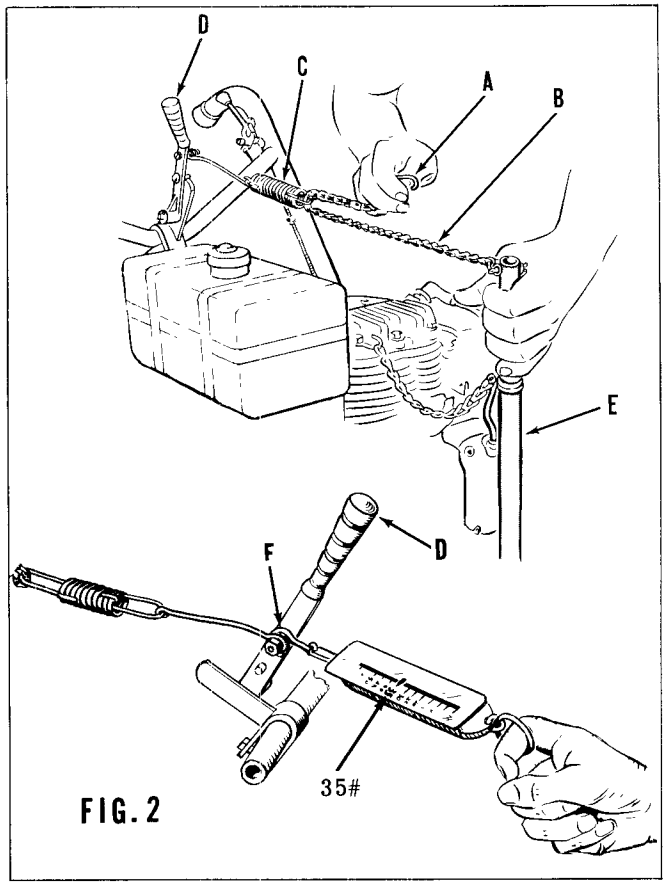

FIG. 2

The cutter control lever "D" (see Figure 2) is mounted on the cross bars of the mower handle. Unfasten the chain from the position in which it is shipped, leaving it attached to the rod "E" that extends vertically from the flat belt tensioner frame. Move the cutter control lever "D" as far forward as it will go. Then fasten spring hook extension to cutter control handle "D" with screw and 2 nuts provided, in such a manner that the spring hook extension is free to pivot.

You are now ready to adjust the tension on the flat belt. The tension should be sufficient to provide minimum slippage of the flat belt. Excessive slip will be indicated by squealing and/or smoking of the flat belt at the engine pulley. The hook "A" in Figure 2 should be adjusted on Chain "B" so that it requires a force of 30 to 35 pounds to pull control lever "D" over center, as measured with a spring scale pulling on pin "F." This adjustment will have to be repeated from time to time to compensate for stretching of the belt or change in handle height.

With the engine running at moderate speed, pull up slowly on the cutter control lever "D." As the cutter picks up speed, increase the pull and lock the bar in its operating position. Do not make this engagement too rapidly or the belt is liable to slip and burn on the engine pulley. BE SURE TO RELEASE TENSION ON BELT WHEN MOWER IS NOT IN USE.

—OPERATING INSTRUCTIONS—

BEFORE STARTING THE MOWER

Pull clutch rod handle back and release. Release jaw clutch above chain drive.

See that the cutter control bar is in forward, on "off" position, with the flat belt slack on pulleys.

Fill gasoline tank with REGULAR, clean gasoline. (See that gasoline valve below tank is open).

TO START ENGINE open throttle about half way, using lever on the left handle grip. When the engine is cold, it is necessary to choke the engine entirely for one full pull on the starting rope. Set choke about half way and the engine should start on the next try. When the engine starts, gradually move the choke back until the engine runs smoothly. Do not crank the engine with full choke too long, as this will flood the engine, and make it harder to start. Do not run engine partly choked for any length of time, as this will cause the engine to run too hot. A few trials will show you the best way to get the engine running smoothly. To stop the engine, press stop switch until engine stops.

MOWING

It is best to run the mower at first without the cutter in operation so as to become familiar with how the mower operates.

To control the engine speed, raise or lower the control lever at the left handle grip. With engine running at somewhat reduced speed, slowly move clutch rod handle forward until mower starts to move at the same time increasing the engine speed as necessary to keep the engine from stalling, then move the clutch handle all the way forward into the operating position. Control the speed of the mower by means of the throttle control as desired. In making turns, reduce the speed somewhat and bear down slightly on the handle so that the front wheels can slide sideways over the grass. When making a "U" turn, it is best to disengage the clutch and allow the machine to coast through the turn, then gradually engage clutch again after turn is completed. To stop the mower, disengage the clutch some distance from the stopping point and allow mower to coast to a stop. Always engage the clutch gradually in starting, and hold up on the mower handle a little to prevent the front end of the machine from bobbing up. A little practice as described above will make the handling of the mower easy and simple.

YOU ARE NOW READY TO CUT GRASS

SETTING THE HEIGHT OF CUT

When your 24" S. P. leaves the factory, the cutter is set to cut at a 2 inch height for average conditions. The height of cut is adjustable from 1 to 4 inches. This is best accomplished by placing spacers "C" (See Figure 3) and spacers "D" (See Figure 4), either above or below the cutter shaft sleeve. For the highest cut, all spacers are placed above the sleeve. For the lowest cut, all spacers are placed below the sleeve. For intermediate settings, some spacers are below and some above as required. These spacers are 1/2 and 1/4 inch thick, so the variation in height of cut can be made in 1/4 inch steps.

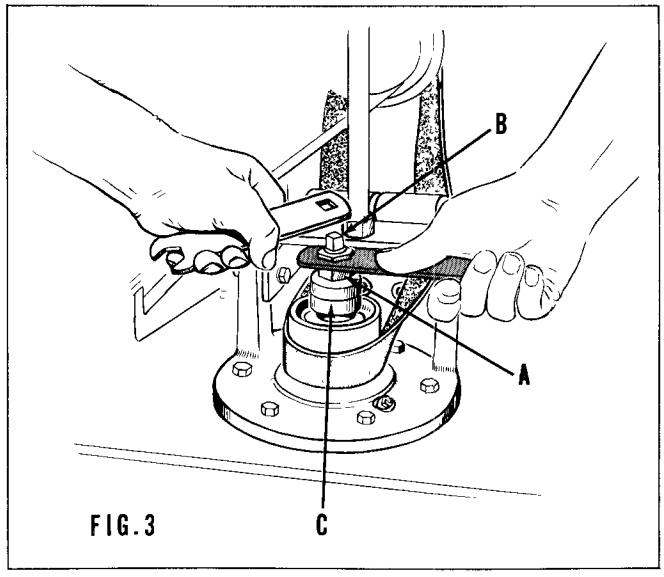

FIG. 3

To change the height of cut, first loosen nut "A" (See Figure 3) at upper end of cutter shaft, using the wrenches provided, then tip mower back until handle rests on the ground. Hold cutter arm and shaft "G" (Figure 4) and remove top nut "A" (Figure 3). The shaft can now be drawn down through the sleeve. Place the required number of spacers on the cutter shaft and replace shaft in sleeve. Put the balance of the spacers on shaft at top and replace top nut "A" by hand. Tip mower forward and tighten nut "A" securely.

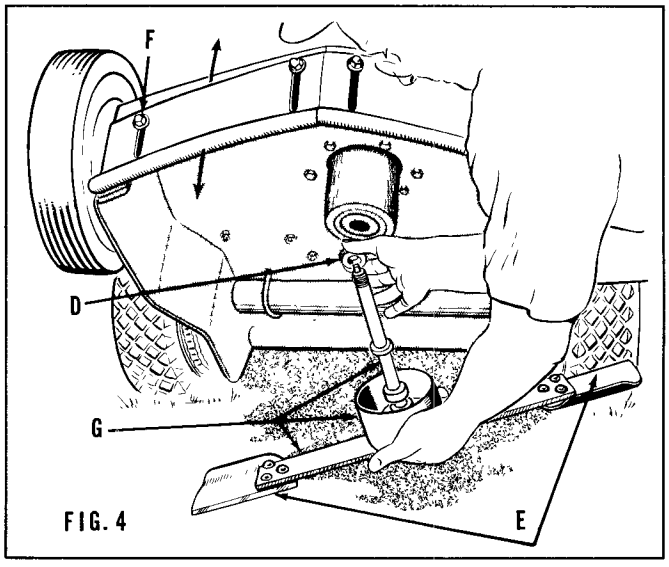

FIG. 4

THE FRONT GUARD

The front guard is slotted to allow adjustment up or down according to the cutting height selected (See Figure 4). It should be set so that its lower edge is about 1/8 inch below the blade. This can be done by first turning the cutter arm until it points straight forward when the blade will be close to the guard. Then loosen the four holding screws(F)in the slots and set the guard at the desired height. Be sure that the screws are securely tightened.

SERVICE INSTRUCTIONS

CHANGING GROUND SPEED

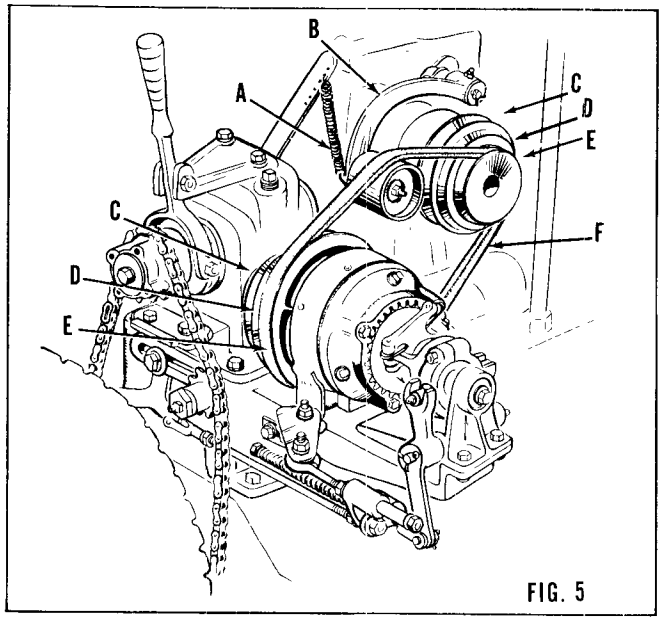

FIG. 5

Multi-groove pulleys are used to provide three optional ground speeds. (see Fig. 5). The grooves "C" nearest to the engine are for the higher speed, and the other grooves "D" and "E" are for the lower speed. To shift the "V" belt "F" (see Fig. 5) from one speed to the other, disconnect spring "A" attached to the idler arm "B". Turn idler arm "B" up out of the way and remove belt "F" first from the reducer pulley and then from the engine pulley. Place belt "F" in the other groove selected of the reducer pulley and then slip it into the corresponding groove of the engine pulley. Re-connect tension spring "A" to the idler arm "B". Adjust spring tension for minimum slippage of "V" belt.

REPLACING "V" BELT

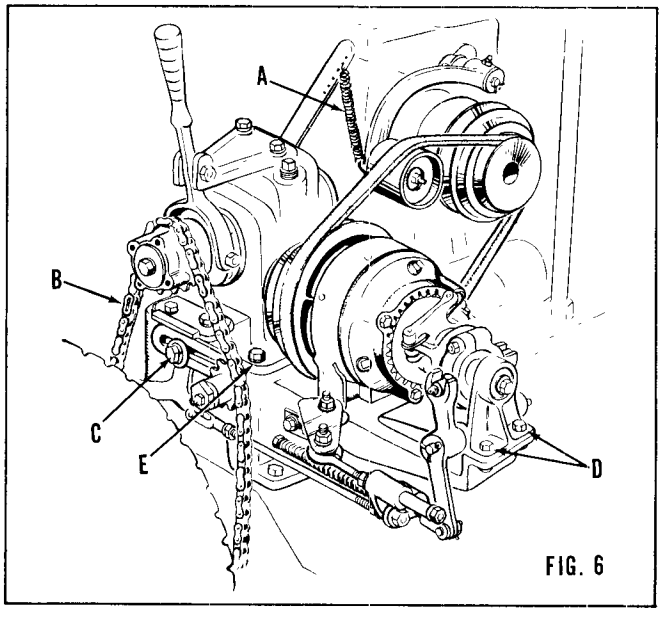

FIG. 6

To replace the "V" belt on your 24" S. P., first cut off the old belt, then remove chain "B" (see Fig. 6). Next loosen the two screws "D" that hold the bearing block to the speed reducer base. Next step is to remove the crank bracket "C". Then remove the four screws "E" that secure the housing to the speed reducer base. Then unhook spring "A" from the spring anchor. Now lift the housing off the base and install the new "V" belt by slipping it over the housing.

Make certain when replacing belt that the pulleys are lined up properly and that the idler assembly does not jump when the machine is running.

TRACTION DRIVE ADJUSTMENT

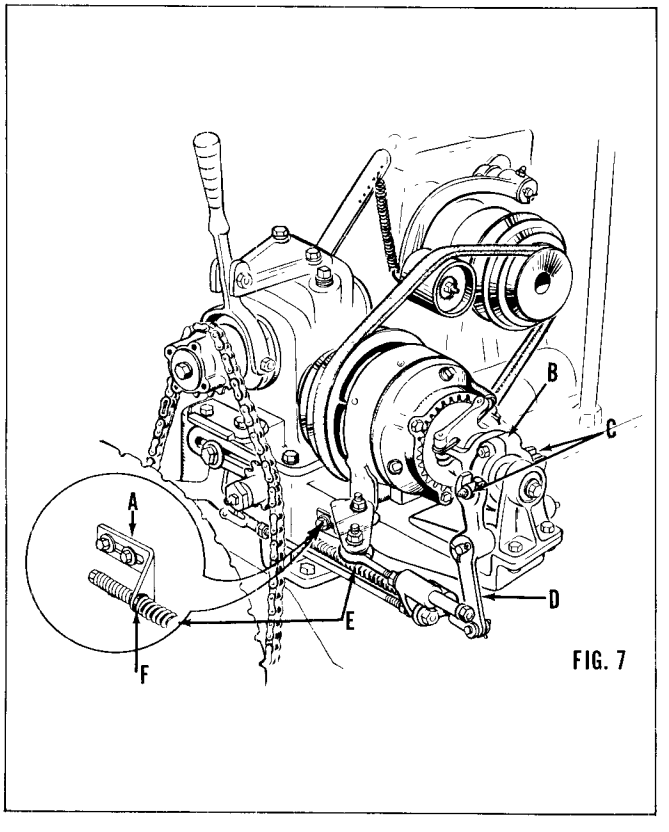

FIG. 7

The traction drive mechanism has been adjusted at the factory. Additional adjustments will be necessary to compensate for wearing of moving parts. In Fig. 7 be sure bracket "A" is positioned so there is approximately a 1/16" gap between bracket "A" and the cut washer just behind spring "E" at point "F", when the clutch is in the disengaged position. This adjustment should allow free movement of release bearing "B" in openings of clevis "D" at point "C". If binding should occur at points "C" a slight readjustment at point "F" will be necessary.

SERVICE INSTRUCTIONS

CLUTCH ADJUSTMENT

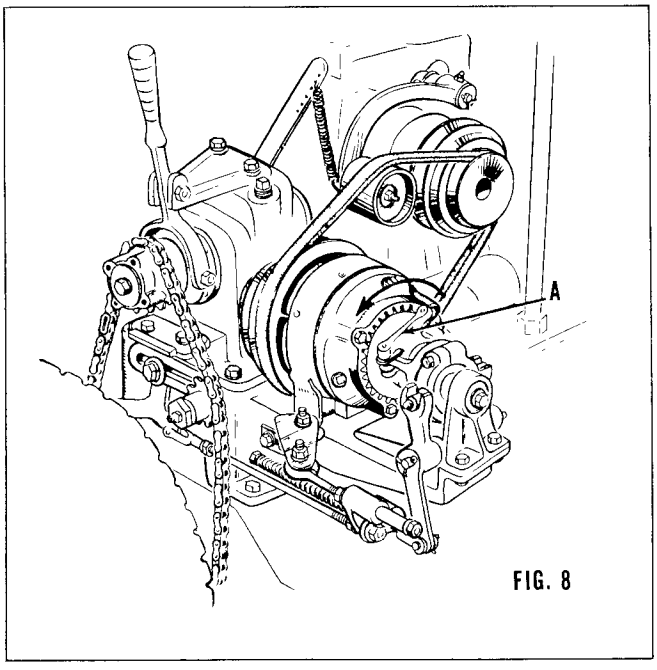

FIG. 8

When your 24" S. P. leaves the factory, the clutch itself is properly adjusted. To make an overall check, throw the clutch rod handle forward until the clutch locks in its operating position. Pull the mower backward a few inches. If the wheels skid, the adjustment is correct. If the clutch slips, allowing the wheels to turn, adjust the clutch as follows: Loosen setscrew "A" (see Fig. 8) in the roller lever spider of the clutch. Turn the spider counter-clock-wise (as shown by arrow in Fig. 8) about a $\frac{1}{4}$" turn, tighten setscrew "A" and recheck. Make further adjustment as needed to stop the clutch from slipping.

CAUTION: Be careful to set the clutch only tight enough to prevent slipping. After a new mower has been in use for a short time, a readjustment of the clutch will be necessary to take up the "run in" wear on the friction discs. From time to time after that, it will be necessary to make additional adjustments to take up the normal wear on the discs. It is best to make the "over-all" check, as described above each time the mower is used. This can be done in a few moment's time and will greatly prolong the life of the discs.

CONTACT YOUR LOCAL
TORO DEALER
FOR REPAIR PARTS,
MOWER SERVICE AND
LAWN CARE INFORMATION



BRAKE BAND ADJUSTMENT

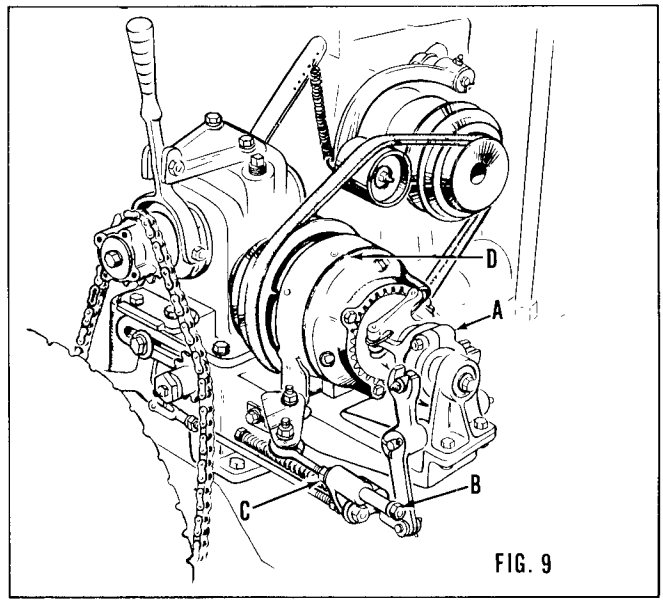

FIG. 9

Release clutch "A" (see Fig. 9) and adjust sleeve by releasing nut "B" to allow 1/16" clearance at "C" (See Fig. 9). On the engine side of the brake band "D" are two nuts for adjusting tension of the brake band. This band should be moved up tight and then released until there is no drag on the reverse mechanism with the control handle in a neutral position.

CHAIN ADJUSTMENT

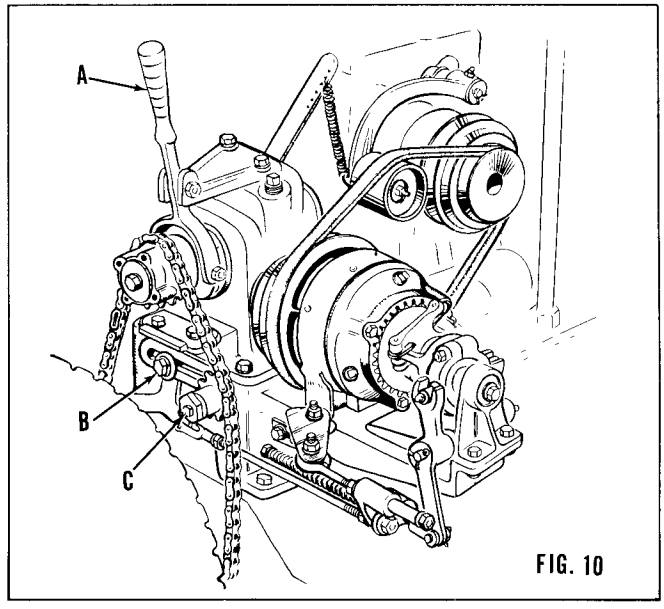

FIG. 10

To adjust chain tension, (see Fig. 10) release clutch lever "A" put block under axle to raise right rear wheel off of the ground; loosen bolt "B" and move idler sprocket "C" forward until chain is snug. Tighten bolt "B" by hand, turn wheel over to make sure the chain does not bind in any position. Then tighten bolt "B" securely.

SERVICE INSTRUCTIONS

CARE OF THE MOWER

Keep your mower clean. Remove accumulations of dirt and old grass, especially around moving parts. In this way you can watch for minor adjustments that may be needed, such as nuts, or screws that might work loose after a considerable period of use. Attention to this will prevent future trouble that might necessitate costly replacements. After the mower has been run a week or so, carefully tighten all screws and nuts.

Rear tires should be kept inflated to 35 pounds pressure.

ADJUSTMENT OF DIFFERENTIAL

This is done by means of the axle nut. Block left hand wheel so that it cannot turn, and tighten nut until the gears bind and will not allow the wheel to spin freely. Back the nut off a little until the cotter pin can be inserted. (Note that there are two holes in the axle for the cotter pin. This allows a closer adjustment of the gears.) If the gears do not run freely, back the nut off a little more, using the other cotter pin hole if necessary. IT IS IMPORTANT THAT THE GEARS BE KEPT IN PROPER ADJUSTMENT. This can be easily and quickly checked by simply blocking up rear end of mower, and checking the back-lash in the right wheel when the left wheel is held stationary. If there is more than a very slight amount of back-lash, the gears should be adjusted.

REPLACING FLAT BELT

When it becomes necessary to replace the flat belt, first remove "V" belt as described in the paragraph: "Changing Ground Speed." Be sure that the cutter is not engaged. Remove old belt from cutter pulley. Slip belt, one side at a time, out from the belt guides which are below the idler pulleys. DO NOT PULL THE BELT OUT FORCIBLY, AS THIS MIGHT BEND THE GUIDES. To put on the new belt, reverse the above operation being sure that the belt is between the guides and the pulleys, and that the inside surface of the belt is next to all pulleys.

ENGINE

The cooling fan will suck in cut grass and some will become lodged between cooling fins. This must be removed to prevent damage to engine from overheating. For further engine care, please study your engine manual.

SHARPENING CUTTER ARM BLADES

Always keep the blades on your cutter bar sharp, this will insure better performance and a cleaner cut.

Remove cutter arm and shaft from the mower as explained in the paragraph: "Setting the height of cut" and illustrated in Figures 3 and 4. Then unscrew left-hand nut at bottom of cutter shaft and remove cutter arm from shaft. To do this, hold squared top "B" (Figure 3) of shaft with wrench. When sharpening, it is best to hold the cutter bar in a vise if one is available. Otherwise place the cutter bar on any convenient solid support where it can be held stationary.

In filing the blades "E" (Figure 4), maintain the original angle of the cutting edge as closely as possible.

It is not necessary to file out all the small nicks that may have appeared in the edge as long as the edge in general is in a sharp condition. We wish to stress the following point: BE SURE TO REMOVE THE SAME AMOUNT OF METAL FROM EACH BLADE TO PREVENT UNBALANCE! IF AN EMERY WHEEL IS USED FOR SHARPENING, CARE SHOULD BE EXERCISED SO THE CUTTING EDGES ARE NOT "BURNED" BY TOO RAPID GRINDING.

STORING MOWER

When storing your 24" S. P. over the winter or any long period, we recommend that you block up the machine to remove weight from the tires and release tension on all belts and springs.

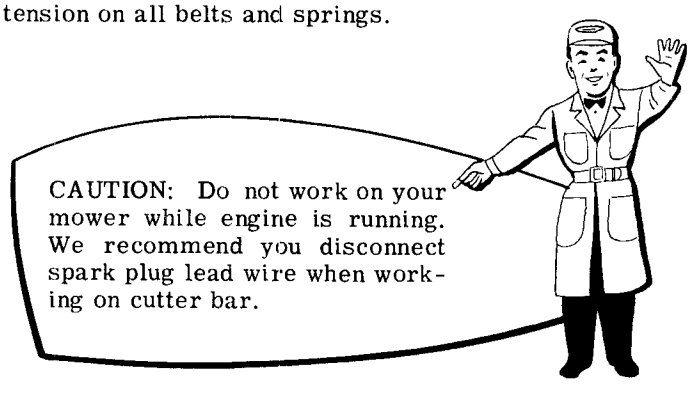

TORO POWER MOWERS

Designed for heavy duty mowing

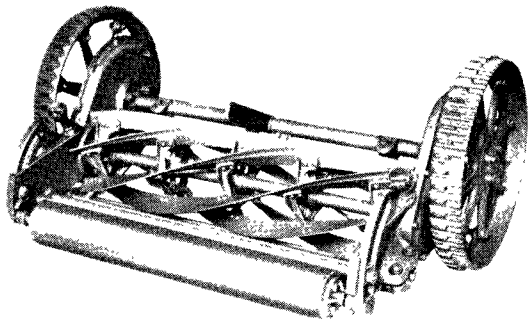

SPARTAN

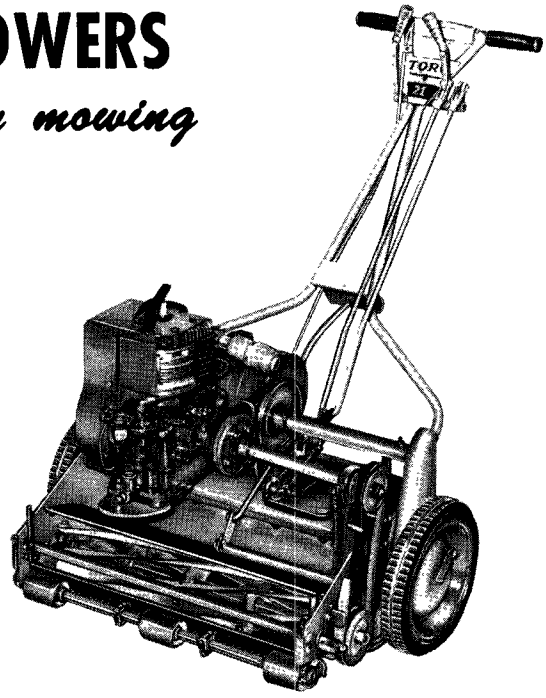

21" GREENSMOWER

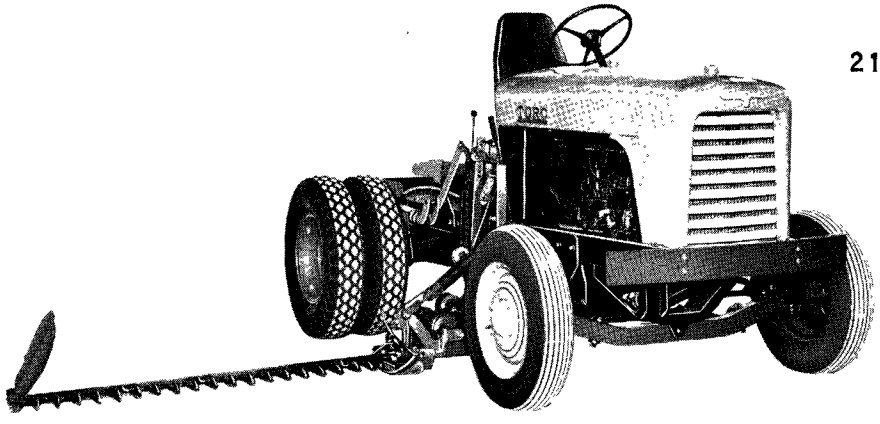

SERIES IV TRACTOR

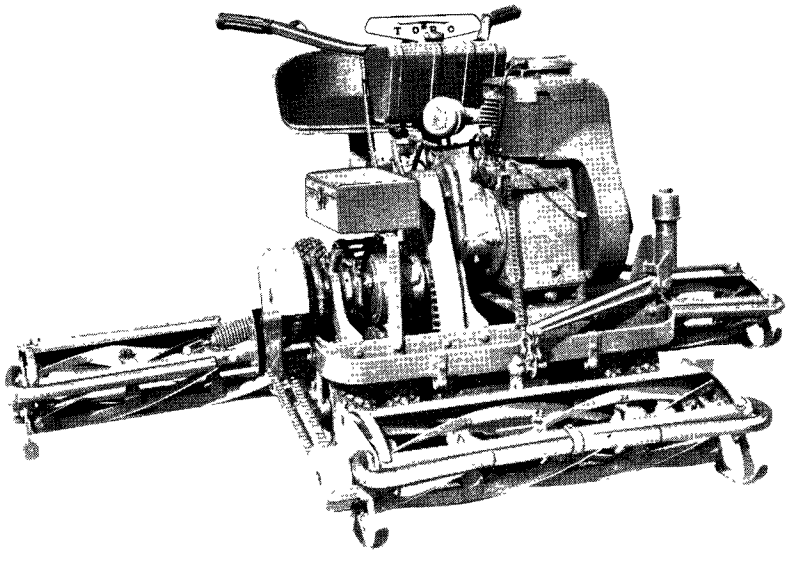

76" PROFESSIONAL

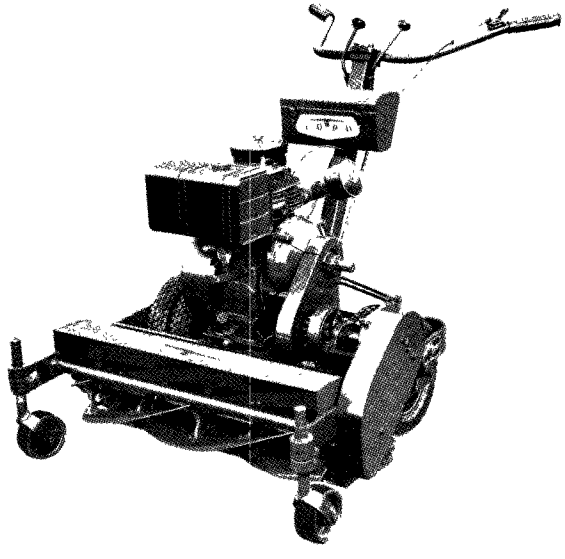

PARK SPECIAL

SERIES II

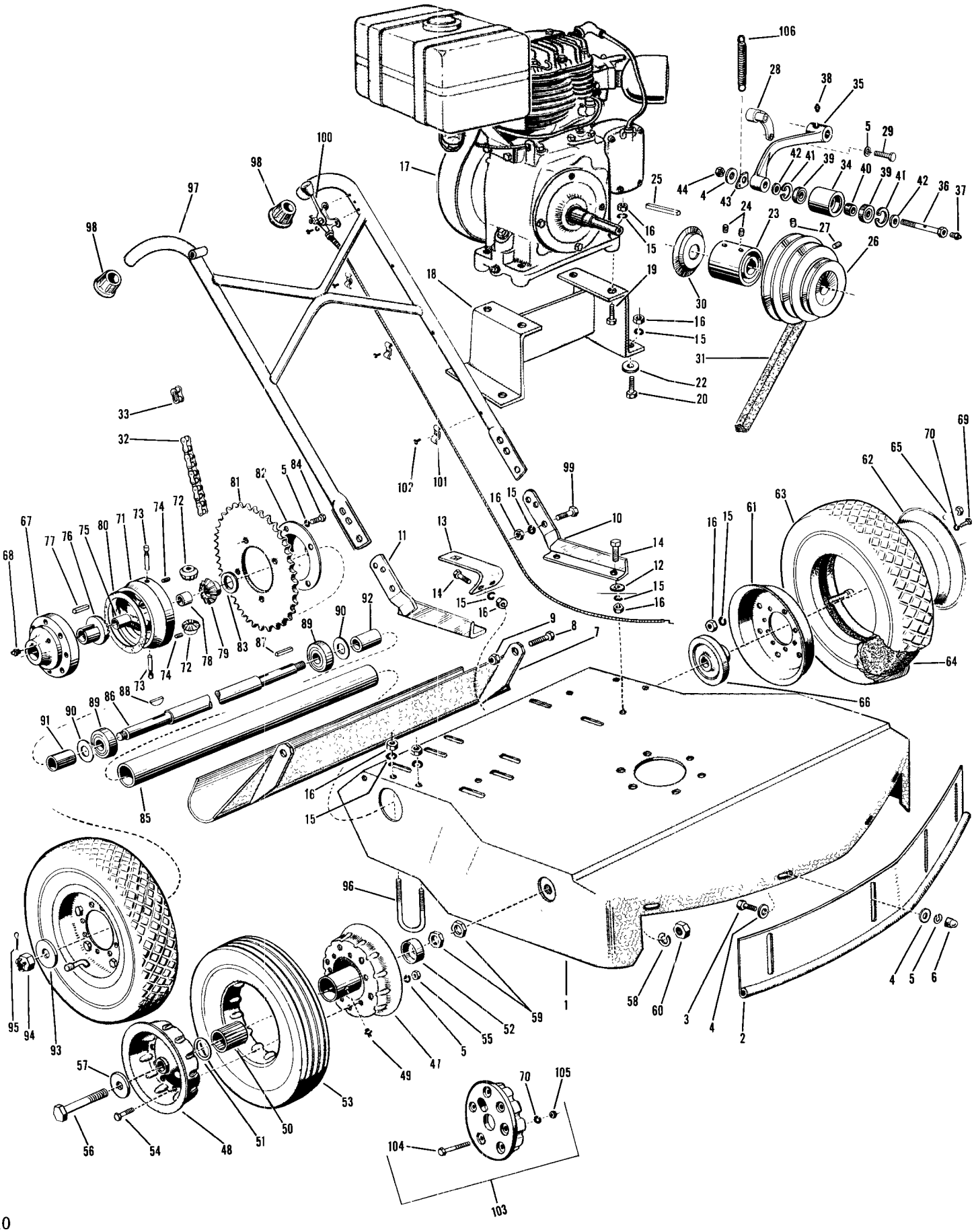
106
28
38
35
5
29
42
41
39
34
40
39
41
42
36
37
44
4
43
24
23
27
26
25
16
15
30
17
100
98
97
98
18
19
16
15
31
22
20
33
32
102
101
99
10
14
12
15
16
13
11
14
15
16
81
82
5
84
67
77
76
75
80
71
73
74
72
68
72
78
79
83
87
89
90
92
73
74
9
8
7
16
15
61
63
62
65
70
69
64
66
91
90
89
86
88
85
16
15
96
95
94
93
57
56
54
48
51
50
53
49
47
5
55
52
59
1
58
60
3
4
2
4
5
6
70
105
104
103

PARTS LIST

Ref. No.	Part No.	Description	No. Used
1	WW-6656	Main Frame	1
2	WW-6660	Front Guard	1
3	322-4	Screw, 5/16" N.C. x 7/8"	4
4	3256-3	Washer, 5/16" Cut	9
5	3253-4	Lockwasher 5/16" Reg.	22
6	32111-4	Acorn Cap Nut, 5/16" Plated	4
7	WW-6662	Rear Guard	1
8	WW-5297	Screw	2
9	3296-11	Nut, Elastic Stop, 3/8"	2
10	WW6525-1	Handle Bracket, Left	1
11	WW6525-2	Handle Bracket, Right	1
12	WW-5313	Rubber Washer	4
13	WW-5938	Sulky Hitch Plate	1
14	323-7	Screw, 3/8" N. C. x 1-1/4"	6
15	3253-5	Lockwasher, 3/8" Reg.	30
16	3217-7	Nut, 3/8" N.C. Full	30
17	221-35	Engine, Wisconsin BKN	1
18	WW-5419	Engine Base	1
19	323-11	Screw, 3/8" N.C. x 2-1/4"	4
20	323-6	Screw, 3/8" N.C. x 1"	4
21	WW-5397	Washer	2
22	3256-4	Washer, 3/8" Cut	2
*	WWK-6521	"V" Belt Idler Assembly	1
23	WW-5440	Pulley, Flat Belt	1
24	3247-3	Set Screw	2
25	WC-1472	Key	1
26	WW-6517	Pulley, "V" Belt	1
27	3245-9	Set Screw	2
28	WWK-6735	Idle Bracket Assy.	1
29	322-16	Screw, 5/16" N.C. x 1⅛"	2
30	WW-6575	Collar	1
31	271-56	"V" Belt	1
32	WW-6536-1	Roller Chain	1
33	2710-26	Connecting Link	1
34	WW-6518	Idler Pulley	1
35	WW-6519	Idler Arm	1
36	WW-6539	Idler Shaft	1
37	302-18	Zerk Fitting	1
38	302-19	Zerk Fitting	1
39	251-109	Bearing	2
40	WW-6520	Spacer	1
41	32120-10	Retainer Ring	2
42	T-99	Washer	2
43	WW-5652	Spring Anchor	1
44	3218-3	Nut, 3/8" N.C. Jam	1
*	241-35	Front Wheel Complete	2
47	241-33	Wheel Disc & Hub, Inside Front	2
48	241-34	Wheel Disc, Outside Front	2
49	302-21	Zerk Fitting	2
50	252-46	Bearing, Front Wheel	2
51	252-47	Retainer, Bearing	2
53	234-4	Tire	2
54	321-2	Screw, 1/4" N.C. x 1/2"	12

Ref. No.	Part No.	Description	No. Used
55	3219-1	Nut, 1/4" N.C. Full	12
56	WW-5300A	Stub Axle	2
57	3256-28	Washer, 3/4" S.A.E.	4
58	3253-16	Lockwasher, 3/4" Reg.	2
59	3220-7	Nut, 3/4" N.F. Jam	4
60	3219-7	Nut, 3/4" N.F. Full	2
*	WWK-5279	Rear Wheel Assembly	2
61	241-13	Wheel Disc, Inside Rear	2
62	241-12	Wheel Disc, Outside Rear	2
63	231-2	Tire, Rear	2
64	232-2	Tube, Rear	2
65	323-4	Screw, 3/8" N.C. x 3/4"	12
66	WW-5272	Wheel Hub, Left Rear	1
67	WW-5261	Wheel Hub, Right Rear	1
68	302-2	Zerk Fitting	1
69	321-3	Screw, 1/4" N.C. x 5/8"	16
70	3253-3	Lockwasher, 1/4" Reg.	16
71	WW-5598	Differential Spider	1
72	WW-5600	Pinion	2
73	WW-6107	Pinion Shaft	2
74	3245-1	Set Screw	2
75	WW-5578A	Bushing	1
76	WWK5577	Bevel Gear w/Bushing (Long Hub)	1
77	WW-5155	Key	1
78	WW-5599A	Bushing	1
79	WW-5581	Bevel Gear (Short Hub)	1
80	WW-5262	Grease Seal	1
81	WW-5621	Sprocket (48 Tooth)	1
82	WW-5625	Differential Cover	1
83	WW-5624	Seal, Felt	1
84	322-3	Screw, 5/16" N.C. x 3/4"	4
*	WWK-5209	Rear Axle Assembly (Reference Numbers 85 thru 95)	1
85	WW-5128	Axle Housing	1
86	WW-5138	Rear Axle	1
87	WW-5155	Key	1
88	3257-5	Key	1
89	251-82	Bearing	2
90	WW-5144	Washer	2
91	WW-5143	Spacer, Right Hand	1
92	WW-5148	Spacer, Left Hand	1
93	3256-19	Washer, 3/4"	2
94	3221-6	Nut, 3/4" N.C., Castellated	2
95	3272-12	Cotter Pin, 1/8" x 1-1/4"	2
96	WW-5122	"U" Bolt	2
97	WW-5332B	Handle	1
98	235-4	Handle Cap	2
99	323-8	Screw, 3/8" N.C. x 1-1/2"	4
100	WWK-373	Throttle Control Assembly	1
101	WW-5380	Clamp	3
102	3251-1	Screw, 10-24 x 3/8"	5
103	WWK-6615	Wheel Weights (Optional Equipment)	4
104	321-15	Screw, 1/4" N.C. x 2½"	12
105	3217-5	Nut, 1/4" N.C.	12
106	WW-5657	Spring	1
*	WW-534A	Frame Decal	1

* Not Illustrated

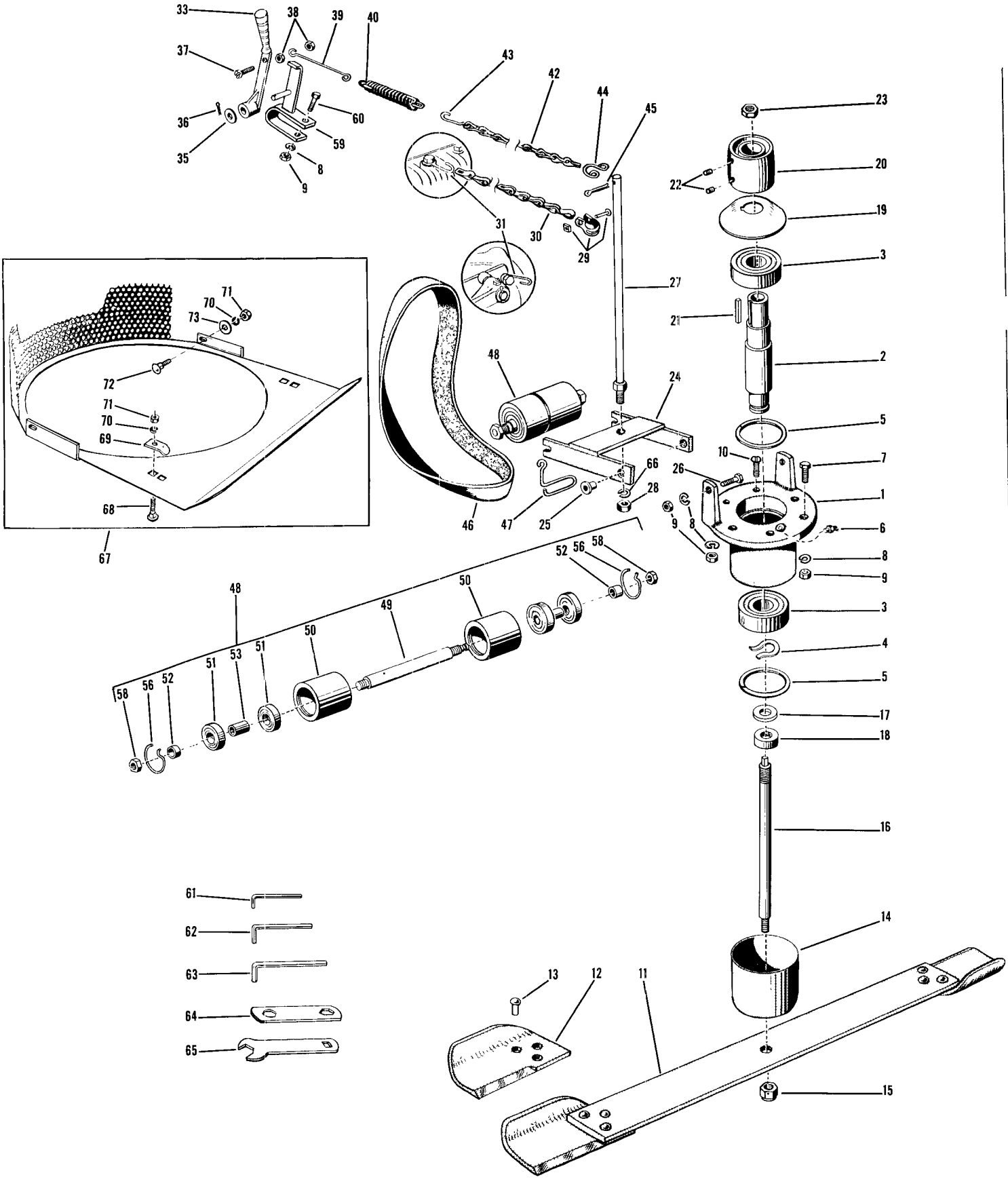
33
38
39
40
37
43
42
44
45
23
36
60
59
35
8
9
20
22
19
31
30
29
3
27
71
70
73
21
2
48
24
72
71
70
69
5
10
7
66
26
28
1
68
46
47
25
9
8
6
67
52
56
58
8
9
48
50
49
3
50
4
51
53
51
5
58
56
52
17
18
16
61
62
14
63
13
12
11
64
65
15

PARTS LIST

Ref. No.	Part No.	Description	No. Used
*	WWK-5127	Cutter Unit Complete	1
1	WW-5003A	Cutter Housing	1
2	WW-5017	Sleeve	1
3	251-81	Bearing	2
4	WW-5082	Snap Ring	1
5	32120-31	Snap Ring	2
6	302-22	Zerk Fitting	1
7	323-7	Screw, 3/8" N. C. x 1-1/4" Cap	4
8	3253-5	Lockwasher, 3/8" Reg.	9
9	3217-7	Nut, 3/8" N. C. Full	9
10	32106-6	Screw, 3/8" N.C. x 1¼" Mach.	2
11	WWK-5408	Cutter Bar Assembly	1
*	WWK-5701	Cutter Bar Assembly, (Non-Suction) Optional	1
12	WW-1501	Cutter Blade	2
*	WW-1504	Cutter Blade (Non-Suction) Optional	2
13	3264-1	Rivet	6
14	WW-5041A	Cup, Cutter Shaft	1
15	WW-5096A	Nut, 5/8", Left Hand	1
16	WW-5011	Cutter Arm Shaft	1
17	WW-5030	Spacer, (1/4")	2
18	WW-5035	Cutter Shaft Spacer (1/2")	5
19	WW-5078	Flinger	1
20	WW-5020	Pulley	1
21	WW-5025	Key	1
22	3247-3	Set Screw	2
23	3219-8	Nut, 7/8" N. F.	1
24	WWK-6565	Cantilever Frame w/bush's.	1
25	WW-1005	Bushing	2
26	323-8	Screw, 3/8" N. C. x 1-1/2"	2
27	WW-5776	Throwout Rod	1
28	3219-7	Nut, 3/4" N. F.	1
29	2412-1	Hose Clamp Assembly	1
30	WW-5771-2	Chain	1
31	WW-5851	Spring Anchor	2
33	WW6557-7	Handle Assembly	1
35	3256-4	Washer, 3/8" Cut	1

Ref. No.	Part No.	Description	No. Used
36	3272-10	Cotter Key	1
37	32114-14	Screw, 5/16"x1¼"Fil. Head	1
38	3218-2	Nut, 5/16" N. C. Jam	2
39	WW-5777	Spring Hook Extension	1
40	WWK-5857	Draw Bar Spring Assembly	1
42	WW-5771-4	Chain	1
43	WW-5762	Hook	1
44	WW-5774	Clevis	1
45	3272-22	Cotter Key	1
46	WW-6601A	Flat Belt	1
47	WW-5878	Belt Guide	2
48	WWK-6740	Cantilever Shaft Assembly	1
*49	WW-1018B	Shaft(25106-101 Thru 25106-299)	1
49	WW-1018C	Shaft (25106-300 & Up)	1
50	WW-1031A	Idler Pulley	2
51	251-5	Bearing (25106-300 & Up)	4
*51	251-123	Bearing, use w/WW1018B Shaft Only.	4
52	WW-1040B	Bearing Spacer	2
53	WW-1045A	Bearing Spacer	2
56	WW-5656	Snap Ring	2
58	3220-6	Nut, 5/8" N. F. Jamb	2
59	WW-6580	Bracket, Throwout Handle	1
60	323-10	Screw, 3/8" N.C. x 2"	1
*	302-17	Grease Fitting use with WW-1018B Shaft only	1
61	223-7	Socket Wrench, 1/4"	1
62	223-8	Socket Wrench, 5/16"	1
63	223-2	Socket Wrench, 3/8"	1
64	WW-5042A	Wrench	1
65	WW-5042B	Wrench	1
66	3253-16	Lockwasher, 3/4" Spring	1
67	LMK-19	Leaf Mulcher Assembly	1
68	3230-4	Bolt, 5/16"N. C. x 1½"Carr.	2
69	LM-422	Clip	2
70	3253-4	Lockwasher 5/16" Reg.	4
71	3217-6	Nut, 5/16" N. C. Full	4
72	3230-2	Bolt, 5/16"N. C. x1"Carr.	2
73	3256-2	Washer, 1/4" Cut	2

* Not Illustrated

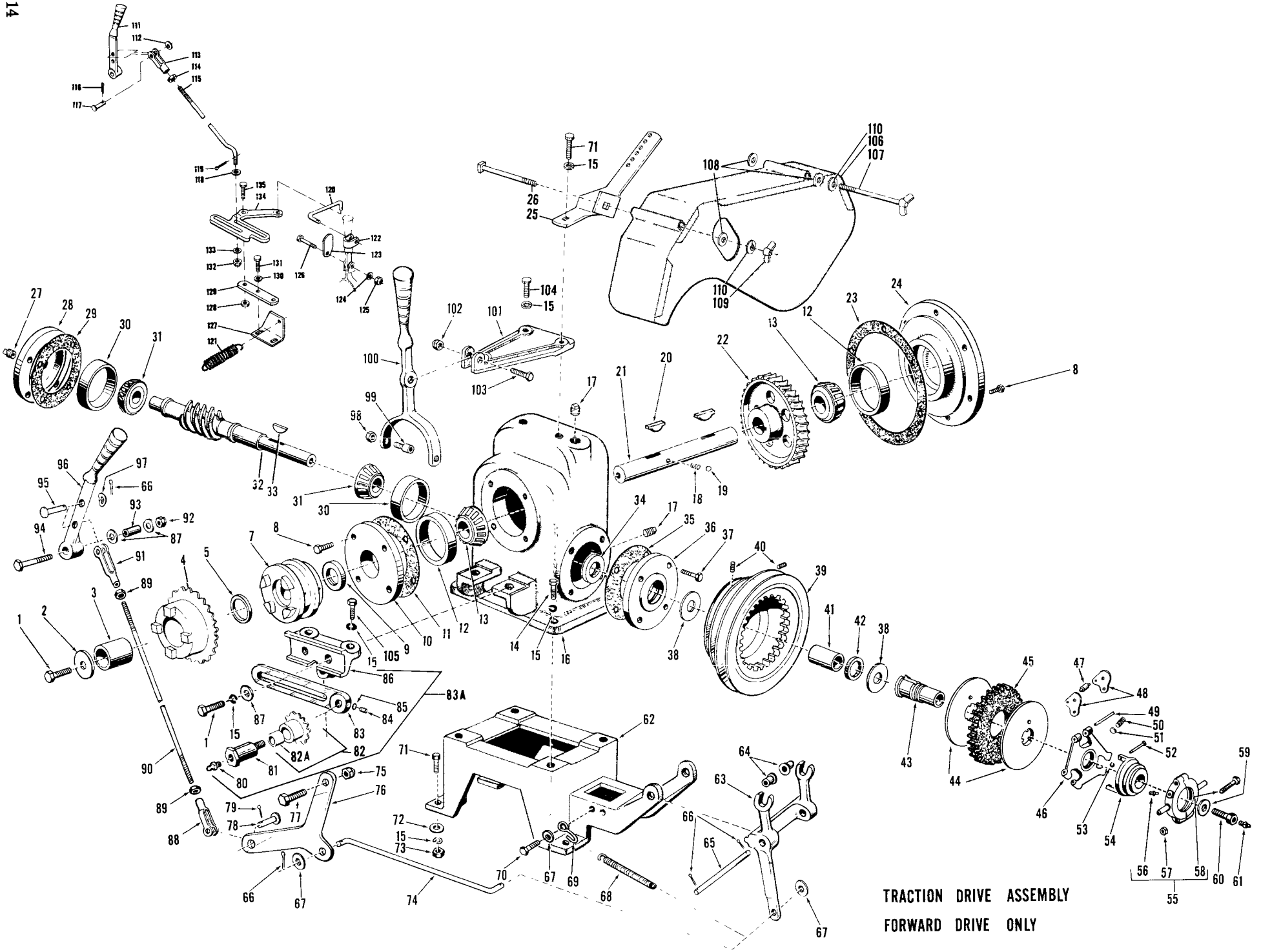

TRACTION DRIVE ASSEMBLY
FORWARD DRIVE ONLY

PARTS LIST

Ref. No.	Part No.	Description	No. Used
1	323-4	Screw, 3/8" N.C. x 3/4"	2
2	WW-6751	Washer	1
3	256-47	Bushing	1
4	WW-6750	Output Sprocket	1
5	WW-6530	Thrust Washer	1
7	WW-6749	Sliding Hub	1
8	321-3	Screw, 1/4" N.C. x 5/8"	10
9	253-33	Oil Seal	1
10	WS-285	Bearing Cap	1
11	WS-295A	Gasket	1
12	254-38	Bearing Cup	2
13	254-39	Bearing Cone	2
14	323-18	Screw, 3/8" N.C. x 1 1/8"	4
15	3253-5	Lockwasher, 3/8" Reg.	12
*	WWK-6646	Speed Reducer Assembly	1
16	WS-200A	Housing	1
17	281-2	Pipe Plug	2
18	224-15	Spring	1
19	255-1	Steel Ball, 1/4"	1
20	3257-19	Key	2
21	WW-6607	Output Shaft	1
22	WM-266	Worm Gear	1
23	WS-260	Gasket	2
24	WS-280	Bearing Cap	1
25	WW6684-1	Guard Bracket	1
26	3230-13	Bolt, 5/16" N.C. x 3 1/4"	1
27	281-7	Pipe Plug	1
28	WW-6512	Bearing Cap	1
29	WW-6515	Gasket	1-3
30	254-16	Bearing Cup	2
31	254-15	Bearing Cone	2
32	WW-6606A	Worm Shaft	1
33	3257-5	Key	1
34	253-57	Oil Seal	1
35	WW-6513	Gasket	1-3
36	WW-6608	Bearing Cap	1
37	322-3	Screw, 5/16" N.C. x 3/4"	8
38	256-45	Thrust Washer	2
39	WW-6603	"V" Pulley	1
40	3245-9	Set Screw	2
41	WW-6609	Bushing	1
42	253-59	Seal	1
*	352-168	Clutch Assembly, Complete	1
43	352-170	Clutch Body	1
44	352-171	Clutch Plate	1
45	352-172	Clutch Facing	1
46	352-182	Adjustment Spider	1
47	352-173	Roller	3
*	352-169	Lever Assembly	1
48	352-174	Clutch Lever	6
49	352-175	Adj. Spider Pin	3
50	352-180	Adj. Lock Screw	1
51	352-181	Lock Plug	1
52	352-184	Link Pin	3
53	352-183	Retaining Ring	3
54	352-177	Release Sleeve	1
55	352-178	Release Bearing Assy. w/Zerk	1
56	302-5	Grease Fitting	1
57	3296-27	Nut, 10-32	2
58	352-185	Screw, 10-32 x 1 1/2"	2
59	2-P-9	Washer	1
60	WW-6610A	Special Capscrew	1
61	302-5	Zerk Fitting	1
62	WW-6604	Speed Reducer Base	1
63	WW-6548	Clevis	1
64	WW-6549	Bushing	2
65	WW-6554	Clevis Pin	1
66	3272-6	Cotter Key	4
67	3256-23	Washer, 5/16 S.A.E.	3
68	T-350	Spring	1

Ref. No.	Part No.	Description	No. Used
69	WW-5851	Spring Anchor	1
70	322-4	Screw, 5/16" N.C. x 7/8"	1
71	323-7	Screw, 3/8" N.C. x 1 1/4"	4
72	3256-4	Washer, 3/8" Cut	4
73	3217-7	Nut, 3/8" N.C.	4
74	WW-6605	Rod	1
75	3296-18	Nut, 5/16" Elastic Stop	1
76	WW-6558	Crank	1
77	322-7	Screw, 5/16" N.C. x 1 1/2"	1
78	283-1	Yoke Pin	1
79	3272-6	Cotter Pin	1
80	302-2	Zerk Fitting	1
81	WW-5505A	Chain Tightener Stud	1
82	WWK-6372	Idler Sprocket w/Bushing	1
82A	256-17	Bushing	1
83	WW-6559	Idler Bracket	1
83A	WWK-6672	Chain Idler & Crank Bracket Assembly	1
84	32133-24	Set Screw	1
85	PD-53	Plug	1
86	WW-6568A	Crank Bracket	1
87	3256-24	Washer, 3/8" S.A.E.	2
88	GB-119	Rod Yoke	1
89	3220-3	Nut, 3/8" N.F. Jam	2
90	WW-6555	Rod	1
91	282-1	Yoke	1
92	3296-6	Nut, 3/8" Elastic Stop	1
93	WW-6132	Bushing	1
94	3211-14	Screw, 3/8" N.C. x 3 1/4"	1
95	283-2	Yoke Pin	1
96	WW6557-6	Handle	1
97	3290-212	Spring Washer	1
98	3218-2	Nut, 5/16" N.C. Jam	2
99	3274-11	Screw	2
100	WW-6526	Shift Lever	1
101	WW-6523	Bracket	1
102	3296-29	Nut, 5/16" Elastic Stop	1
103	322-7	Screw, 5/16" N.C. x 1 1/2"	1
104	323-7	Screw, 3/8" N.C. x 1 1/4"	2
105	323-5	Screw, 3/8" N.C. x 7/8"	2
106	WW-6681	Belt Guard Assembly	1
107	WW-6687	Wing Bolt	1
108	3256-23	Washer, Cut	3
109	32103-2	Wing Nut	1
110	3253-4	Lockwasher	2
111	WW6557-6	Handle	1
112	3290-211	Spring Washer	1
113	282-1	Yoke	1
114	3220-3	Nut, 3/8" N.F. Jam	1
115	WW-6697	Control Rod	1
116	3272-10	Cotter Pin, 1/8" x 3/4"	1
117	283-2	Pin, Yoke	1
118	3256-5	Washer, 7/16" Cut	1
119	3272-10	Cotter Pin, 1/8" x 3/4"	1
120	WW-6695	Link	1
121	T-350	Spring	1
122	WW-6694	Clip	1
123	WW-6700	Lock	1
124	3290-210	Spring Washer	1
125	3296-18	Lock Nut, 5/16" N.C.	1
126	322-8	Screw, 5/16" N.C. x 1-5/8"	1
127	WW-6698	Stop, Bell Crank	1
128	3220-3	Nut, 3/8" N.F. Jam	1
129	WW-6689	Pivot Bar	1
130	3253-5	Lockwasher, 3/8" Reg.	2
131	323-8	Screw, 3/8" N.C. x 1 1/2"	2
132	3296-5	Locknut, 3/8" N.F.	1
133	3256-5	Lockwasher, 7/16" Cut	1
134	WW-6699	Bell Crank	1
135	3211-5	Screw, 3/8" N.F. x 1 1/4"	1

* Not Illustrated

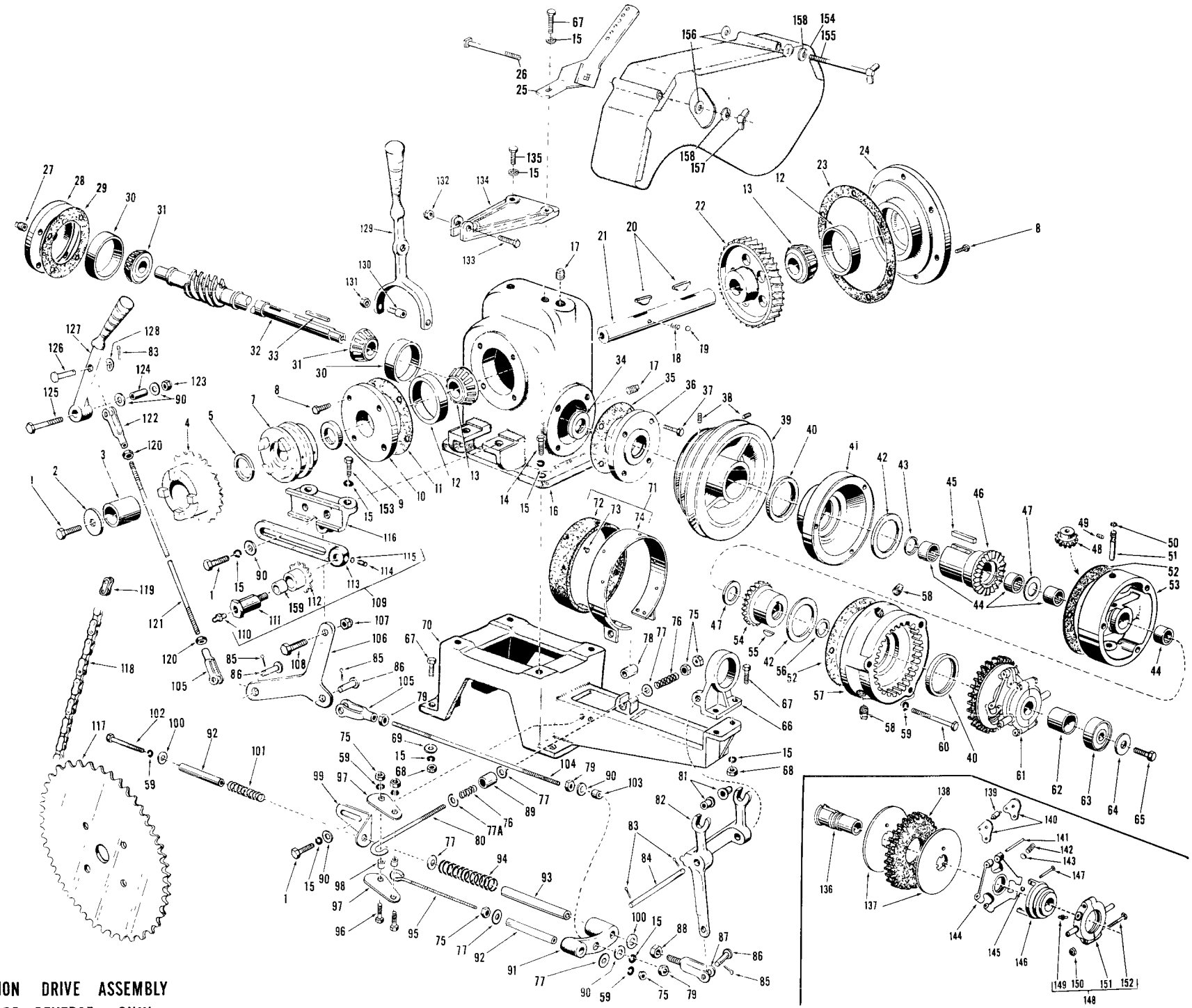

TRACTION DRIVE ASSEMBLY
FORWARD – REVERSE ONLY

PARTS LIST

Ref. No.	Part No.	Description	No. Used
1	323-4	Screw, 3/8" N. C. x 3/4"	6
2	WW-6751	Washer	1
3	256-47	Bushing	1
4	WW-6750	Sprocket, Output	1
5	WW-6530	Thrust Washer	1
7	WW-6749	Sliding Hub	1
8	321-3	Screw, 1/4" N. C. x 5/8"	10
9	253-33	Oil Seal	1
10	WS-285	Bearing Cap	1
11	WS-295A	Gasket	1
12	254-38	Bearing Cup	2
13	254-39	Bearing Cone	2
14	323-18	Screw, 3/8" N. C. x 1-1/8"	4
15	3253-5	Lockwasher, 3/8" Reg.	19
*	WWK-6618	Speed Reducer Assembly	1
16	WS-200A	Housing	1
17	281-2	Pipe Plug	2
18	224-15	Spring	1
19	255-1	Steel Ball	1
20	3257-19	Key	2
21	WW-6607	Output Shaft	1
22	WM-266	Worm Gear	1
23	WS-260	Gasket	4
24	WS-280	Bearing Cap	1
25	WW-6684-1	Guard Brkt.	1
26	3230-13	Bolt, 5/16" N.C.X 3 1/4"	1
27	281-7	Pipe Plug	1
28	WW-6512	Bearing Cap	1
29	WW-6515	Gasket	1-3
30	254-16	Bearing Cup	2
31	254-15	Bearing Cone	2
32	WW-6510	Worm Shaft	1
33	WW-127	Key	1
34	253-57	Oil Seal	1
35	WW-6513	Gasket	1-3
36	WW-6608	Bearing Cap	1
37	322-3	Screw, 5/16" N.C. x 3/4"	8
38	3245-9	Set Screw	2
39	WW-6532	Pulley	1
40	253-58	Oil Seal	2
41	WW-6509	Cover, Reverse	1
42	256-44	Thrust Washer	2
43	253-59	Oil Seal	1
44	252-45	Needle Bearing	4
45	WW-6502	Key	1
46	WW-6505	Bevel Gear, Long Hub	1
47	256-45	Thrust Washer	2
48	WW-5600	Pinion	2
49	3245-7	Set Screw	2
50	237-7	"O" Ring	2
51	WW-6107	Pinion Shaft	2
52	WW-6534	Gasket	2
53	WW-6507	Reverse Gear Housing	1
54	WW-6506	Bevel Gear, Short Hub	1
55	3257-5	Key	1
56	237-20	"O" Ring Seal	1
57	WW-6508	Clutch Housing	1

* Not Illustrated

Ref. No.	Part No.	Description	No. Used
58	285-11	Pipe Plug	2
59	3253-4	Lockwasher, 5/16" Reg.	7
60	322-22	Screw, 5/16" N. C. x 3 1/2"	1
61	352-168	Clutch Assembly	1
62	WW-6535	Clutch Spacer	1
63	251-5	Bearing	1
64	2P-9	Washer	1
65	323-5	Screw, 3/8" N.C. x 7/8"	1
66	WW-6514	Bearing Block	1
67	323-7	Screw, 3/8" N.C. x 1 1/4"	6
68	3217-7	Nut, 3/8" N.C. Full	8
69	3256-4	Washer, Cut	4
70	WW-6516	Reducer Base	1
71	WWK-6563	Reverse Brake Band Assembly	1
72	3P-29A	Brake Lining	1
73	3295-6	Rivet, Lining	9
74	WW-6551	Brake Band	1
75	3219-2	Nut, 5/16" N.C. Full	6
76	WW-6561	Spring	2
77	3256-3	Washer, 5/16" Cut	1
77A	GB-28	Washer	1
78	WW-6543	Spacer	1
79	3219-3	Nut, 3/8" N. F. Full	3
80	WW-6545	Hook	1
81	WW-6549	Bushing	2
82	WW-6548	Clevis	1
83	3272-6	Cotter Key	3
84	WW-6554	Clevis Pin	1
85	3272-6	Cotter Key, 3/32" x 3/4"	3
86	283-1	Yoke Pin	3
87	WW-6553	Yoke	2
88	3220-2	Jam Nut, 5/16" N. F.	1
89	WW-6562	Bushing	1
90	3256-24	Washer, 3/8" S. A. E.	6
91	WW-6544	Rod End	1
92	WW-6564	Spacer	1
93	WW-6547	Spacer, Clutch Spring	1
94	WC-1467	Spring	1
95	WW-6541	Eye Bolt, Reverse Cam	1
96	3210-5	Screw, 5/16" N.C. x 1"	2
97	WW-6542	Reverse Cam	2
98	GB-108	Bushing	2
99	WW-6550	Bracket, Clutch Bar	1
100	3256-23	Washer, 5/16" S. A. E.	3
101	WW-6538A	Spring	1
102	3210-13	Screw, 5/16" N. F. x 3"	1
103	WW-6567	Spacer	1
104	WW-6556	Stud	1
105	GB-119	Rod Yoke	2
106	WW-6558	Crank	1
107	3296-29	Nut, Elastic Stop, 5/16"-18	1
108	322-7	Screw, 5/16" N.C. x 1-1/2"	1
109	WWK-6672	Chain Idler & Crank Bracket Assembly	1
110	302-2	Zerk Fitting	1
111	WW-5505A	Stud, Chain Tightener	1
112	WWK-6372	Sprocket, Idler W/Bushing	1
113	WW-6559	Bracket, Idler	1

(Continued on next page)

PARTS LIST

Ref. No.	Part No.	Description	No. Used
114	32133-24	Set Screw	1
115	PD-53	Plug	1
116	WW-6568A	Crank Bracket	1
117	WW-5621	Sprocket Differential (48 Tooth)	1
118	WW-6536	Drive Chain	1
119	2710-26	Connecting Link	1
120	3220-3	Nut, 3/8" N. F. Jam	2
121	WW-6555	Rod	1
122	282-1	Yoke	1
123	3296-6	Nut, Elastic Stop, 3/8" N. F.	1
124	WW-6132	Bushing	1
125	3211-14	Screw, 3/8" N. F. x 3 1/4"	1
126	283-2	Yoke Pin	1
127	WW6557-1	Reverse Lever	1
128	3290-211	Spring Washer	1
129	WW-6526	Shift Lever	1
130	3274-11	Socket Capscrew, 5/16" N. C. x 3/4"	2
131	3218-2	Nut, 5/16" N. F. Jam	2
132	3296-29	Nut, Elastic Stop, 5/16" - 18	1
133	322-7	Screw, 5/16" N. C. x 1-1/2"	1
134	WW-6523	Bracket, Shift Lever	1
135	323-6	Screw, 3/8" N. C. x 1"	2

Ref. No.	Part No.	Description	No. Used
136	352-170	Clutch Body	1
137	352-171	Clutch Plate	2 1
138	352-172	Clutch Facing	1
139	352-173	Roller	3
*139A	352-169	Lever Assembly	1
140	352-174	Clutch Lever	6
141	352-175	Adj. Spider Pin	3
142	352-180	Adj. Lock Screw	1
143	352-181	Lock Plug	1
144	352-182	Adjusting Spider	1
145	352-183	Ring, Retaining	3
146	352-177	Release Sleeve	1
147	352-184	Link Pin	3
148	352-178	Release Bearing Assy.	1
149	302-5	Zerk Fitting	1
150	3296-27	Nut, 10-32 Stop	2
151	352-179	Release Bearing Less Zerk	1
152	32144-10	Screw, 10-32 x 1 1/2" Mach.	2
153	323-5	Screw, 3/8" N. C. x 7/8	2
154	WW-6681	Belt Guard	1
155	WW-6687	Wing Bolt	1
156	3256-23	Washer, 5/16" S. A. E.	3
157	32103-2	Wing Nut	1
158	3253-4	Lockwasher, 5/16" Reg.	2
159	256-17	Bushing	1

* Not Illustrated

OPTIONAL EQUIPMENT

24" S. P. Self Starting Kit

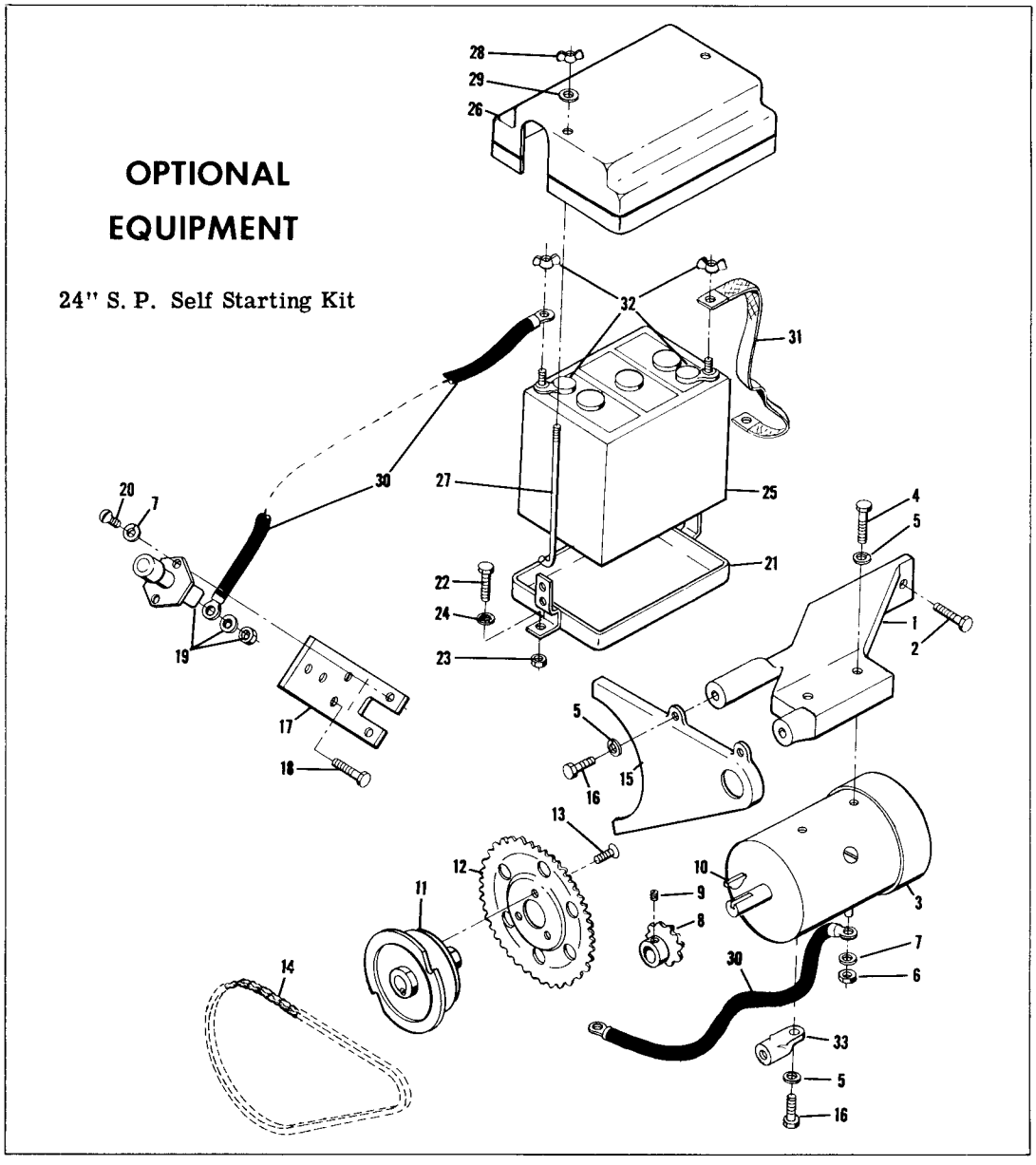

PARTS LIST

Ref. No.	Part No.	Description	No. Used
*	218-111	Starter Assembly Kit	1
1	218-116	Bkt., Starter Motor	1
2	323-7	Screw, 3/8-16x1$\frac{1}{4}$	2
3	218-115	Motor, Starter	1
4	322-5	Screw, 5/16 - 18x1	2
5	3253-4	Lockwasher, 5/16 Spring	4
6	3217-5	Nut $\frac{1}{4}$ - 20	1
7	3253-3	Lockwasher, $\frac{1}{4}$" Reg.	3
8	218-117	Sprocket, 10 Tooth	1
9	32133-26	Set Screw, #10-32x$\frac{1}{4}$ Socket	1
10	3257-2	Woodruff Key, 1/8x5/8	1
11	218-118	Clutch, Over-riding	1
12	218-119	Sprocket, 49 Tooth	1
13	32108-2	Screw Flat Hd. Mach. $\frac{1}{4}$-20x$\frac{1}{2}$	3
14	WW6748	Chain with connector link	1
15	218-120	Chain Guard	1

Ref. No.	Part No.	Description	No. Used
16	322-3	Screw, 5/16-18x$\frac{3}{4}$	2
17	WW6747	Bracket, Switch	1
18	323-9	Screw, 3/8-16x1$\frac{3}{4}$	2
19	218-112	Switch, Starter	1
20	3258-2	Screw, Rd. Hd. Mach. $\frac{1}{4}$-20x$\frac{1}{2}$	2
21	WW6745	Base Assy., Battery	1
22	322-4	Screw, 5/16-18x7/8"	2
23	3217-6	Nut, 5/16 - 18 Full	2
24	3254-2	Lockwasher, 5/16"	2
25	**	Battery	1
26	WW6752	Cover, Battery	1
27	WW6746	Bolt, Hook	2
28	32103-1	Nut, $\frac{1}{4}$" - 20 Wing	2
29	3256-2	Washer, $\frac{1}{4}$" Cut	2
30	218-121	Battery Cable, #4 Wire 17$\frac{1}{4}$" long	2
31	218-113	Strap, Ground	1
32	218-114	Adapter, Battery Terminal	2

* Not Illustrated **Obtain Locally

TORO

America's Leading

builders of Power Mowers

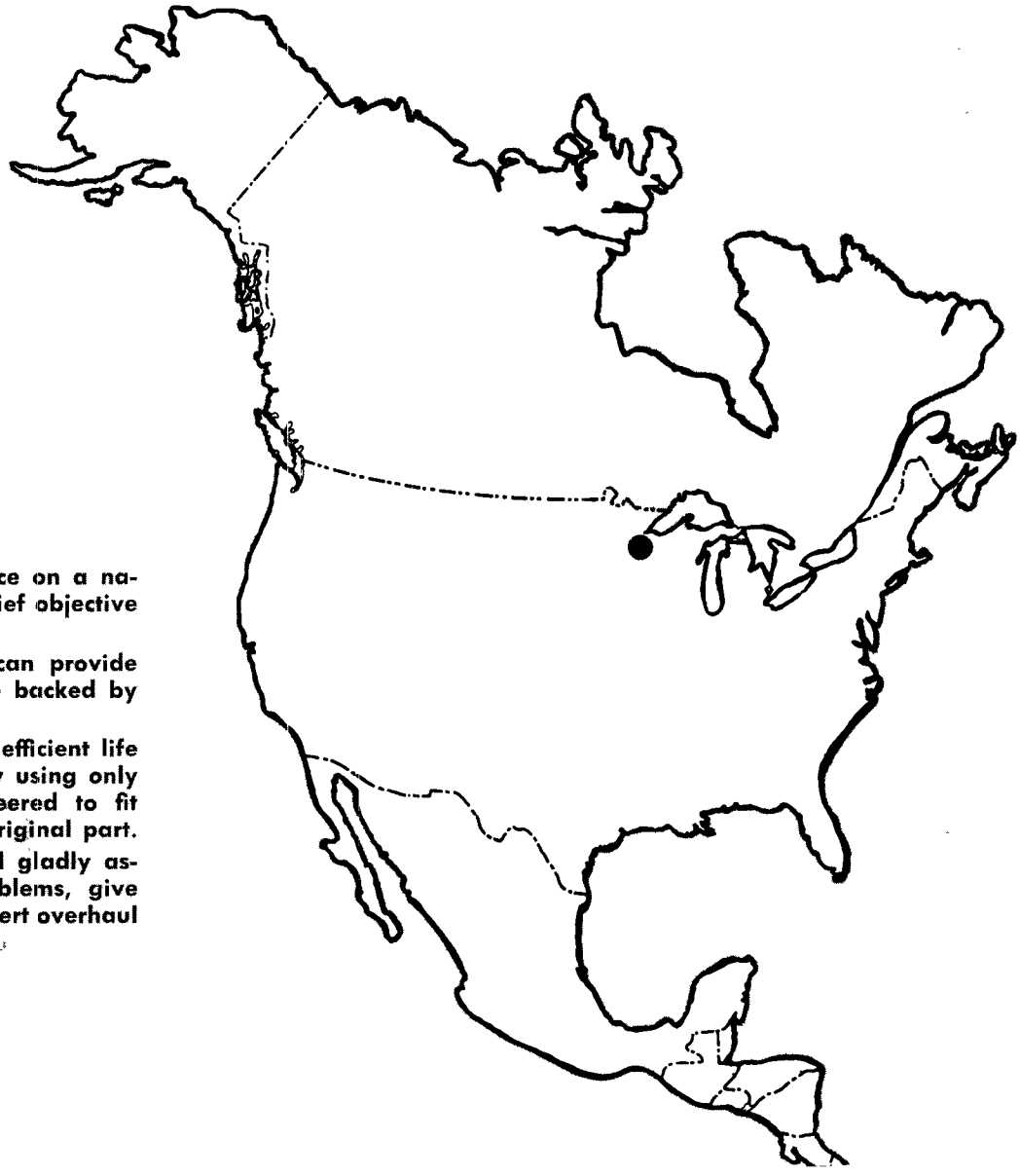

For many years, local service on a national basis has been the chief objective of the Toro organization.

The local Toro Distributor can provide efficient and prompt service backed by genuine Toro repair parts.

Protect and insure the long efficient life built into a Toro product by using only genuine Toro parts—engineered to fit and wear exactly like the original part.

Your nearby distributor will gladly assist you with mowing problems, give free demonstrations and expert overhaul service.



DISTRIBUTED BY

LITHO IN U. S. A.