1962

TORO®

REFERENCE DRAWING AND PARTS LIST

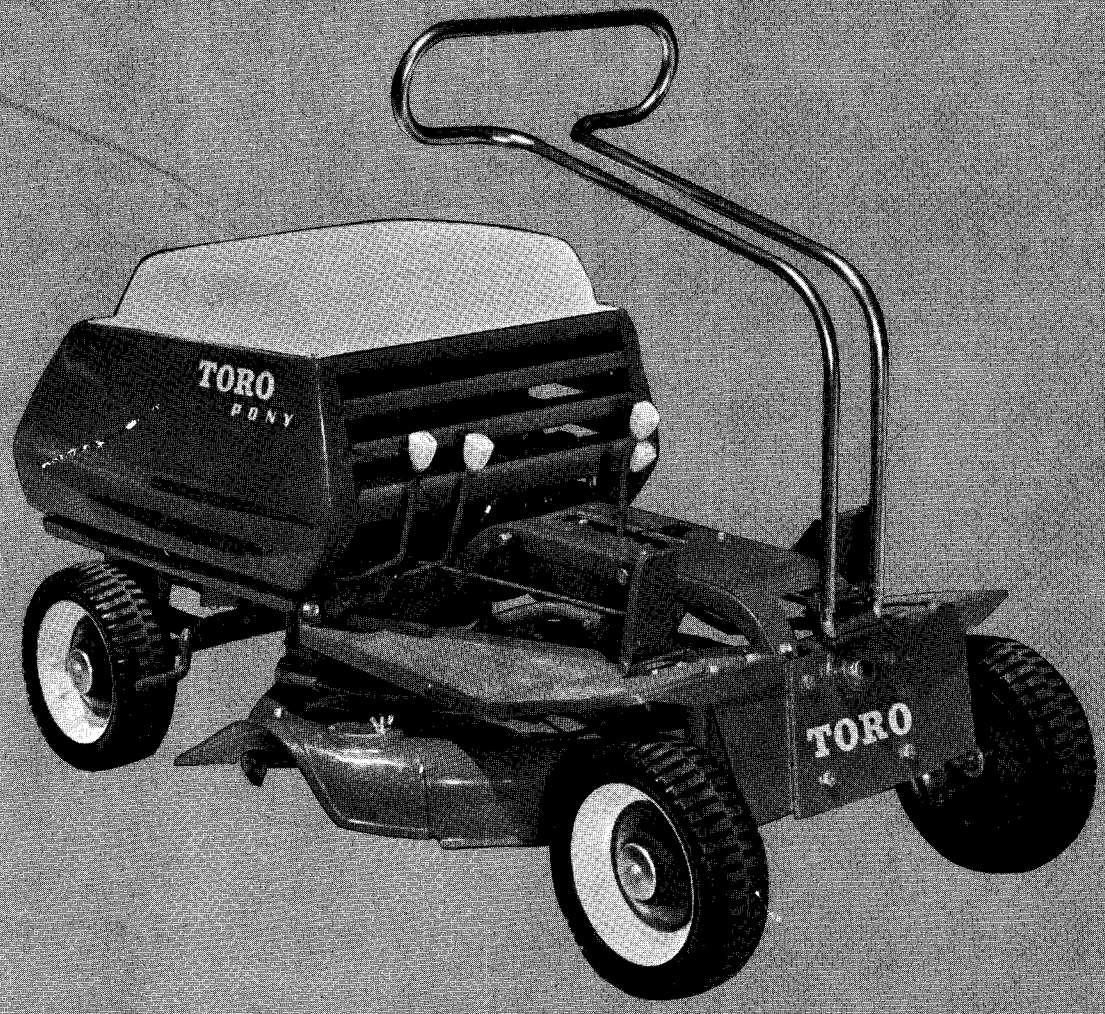

25" TORO PONY®

RECOIL START MODEL NO. 22112
ELECTRIC START MODEL NO. 22122

BOOK NO. 7620

Price 25 cents

SPECIFICATIONS

ENGINE: Lauson VXT45A-3012 Electric Start; VXT45A-3013 Recoil Start.

FUEL TANK CAPACITY: 1 Gallon

TRACTION DRIVE: Spring loaded, ball bearing mounted, idler pulley operating on V-belt connecting engine crankshaft to transmission. Transmission is a 2-speed forward, 2-speed reverse combination bevel and spur gear design. Transmission case is equipped with 6 bronze bushings and one ball bearing. It is packed with Valvoline X-All grease. Transmission to differential drive through a 1/2" pitch 1/4" wide (#41) roller chain. Differential is a stamped steel case with cast grey iron bevel gears.

REDUCTION - Engine to Transmission: 1.8 P.D. to 4.2 P.D. "A" Section pulley- (2.34:1 reduction).

Transmission:
bevel gear case - 16T to 42T (2.6:1 red.)
high speed - 13T to 17T (1: 1.31 speed up)
low speed - 17T to 13T (1.31:1 reduction)

Transmission to Rear Axle:
8T to 42T (5.25:1 reduction)

Total Reduction, Engine to Rear Axle:
24.7:1 high speed, 42.5:1 low speed

Speeds: High - 4.13 mph; Low - 2.41 mph at 3600 rpm.

WHEELS & TIRES: $10\frac{1}{4}$ x $3\frac{1}{4}$ semi-pneumatic tires on stamped steel wheel discs.

CONSTRUCTION: Welded steel square tubes joining stamped steel engine support base and front axle. Stamped steel seat supported on stamped steel shrouding which covers the engine. Shrouding secured to engine support base through separable hinges allowing easy removal of the assembly for service.

STEERING & CONTROLS: Tiller bar steering handle of 3/4 O.D. 16 ga. welded steel tubing. All steering shaft and tie rod joints equipped with sintered metal bushings. Transmission controlled with one lever (High-Low and Forward-Reverse) connected through steel bell crank and control rod. Throttle control mounted to engine head bolts gives choke - run - stop positions. Foot operated pedals control traction clutch and wheel brakes.

CUTTING UNIT:

Housing: Stamped 14 ga. steel suspended from welded steel support brackets.

Blade: One piece fully hardened alloy steel.

Cutter Spindle: Dbl. row ball brgs. driven by 4.05 P.D. pulleys from 2.8 P.D. pulley on engine crankshaft (1.44:1).

Height-of-Cut: Single lever controls spindle engagement-disengagement and height-of-cut. Four cutting heights from approximately $1\frac{1}{2}$ to $3\frac{1}{2}$ inches.

DIMENSIONS:

Wheel Base	$40\frac{3}{4}$"
Wheel Tread	19-7/8"
Turning Radius . . .	30 to center inside rear wheel.

Overall Dimensions:

Length	$53\frac{1}{2}$
Width	$29\frac{1}{2}$
Height	$25\frac{3}{4}$ not including handle.

WEIGHT: Total - 257 lbs.
Rear Axle - 163 lbs.
Front Axle - 94 lbs.

DRAWBAR PULL: Approximately 200 lbs.

SAFETY FEATURES: Automatic blade brake stops cutter blade when disengaged. Special ignition interlock system prevents engine from running unless cutter drive is disengaged or operator is sitting on seat. Completely enclosed and guarded drive.

OPTIONAL EQUIPMENT:
12 V Electric Starter and Battery

Warranty

The Manufacturer warrants each new piece of equipment sold to be free of defects in material and workmanship. For one year from the purchase date of consumer line equipment or 45 days if sold for commercial use, Toro Manufacturing Corporation will repair or replace for the original purchaser, free of charge, through any Authorized Service Dealer, any part or parts found at our factory in Minneapolis, Minnesota, to be defective under normal use and service. All institutional equipment is warranted for ninety (90) days from the purchase date.

This Warranty does not obligate the Manufacturer to bear the cost of transportation charges in connection with the replacement or repair of defective parts -- nor shall it apply to a machine upon which repairs or alterations have been made, unless authorized by the manufacturer.

This Warranty does not include nor cover standard accessories produced by other manufacturers. Such accessories have separate warranties by their respective manufacturers . . . and repair or exchange will be made on the basis of such warranties, and the policies authorized by them shall be adhered to.

This Warranty is in lieu of all other warranties expressed or implied.

COPYRIGHT 1960 BY
TORO MANUFACTURING CORPORATION
MINNEAPOLIS, MINNESOTA - U.S.A.

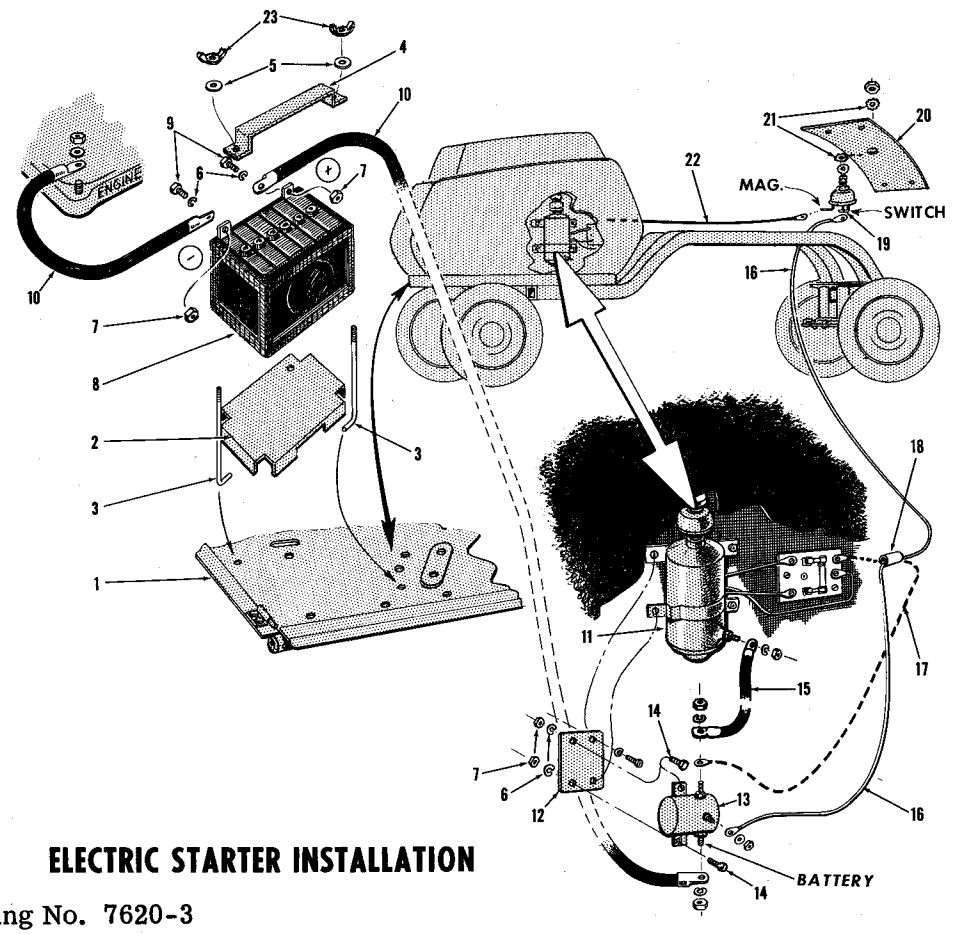

ELECTRIC STARTER INSTALLATION

Drawing No. 7620-3

ELECTRIC STARTER INSTALLATION PARTS LIST

Ref. No.	Part No.	Description	No. Used
1	3-4080	Engine Base	1
2	3-3264	Battery Base	1
3	3-1977	Battery Rod	2
4	3-3942	Cover, Battery	1
5	3256-22	Cut Washer, $\frac{1}{4}$"	2
6	3253-3	Lockwasher, $\frac{1}{4}$"	4
7	3217-5	Nut, $\frac{1}{4}$-20 N.C.	4
8	239-7	Battery, 12 Volt	1
9	321-4	Screw, $\frac{1}{4}$-20 N.C. x $\frac{3}{4}$" Hex. Head	2
10	3-3265	Wire	2
11	221-192	Engine, W/Electric Starter	1

Ref. No.	Part No	Description	No. Used
12	3-2492	Mtg. Brkt., Solenoid	1
13	218-199	Solenoid	1
14	321-2	Screw, $\frac{1}{4}$-20NC. x $\frac{1}{2}$"	2
15	3-3266	Wire	1
16	3-2497	Wire	1
17	3-1972	Wire	1
18	2311-4	Tape, Plastic $\frac{1}{2}$" Wide x 3" Lg.	1
19	218-200	Switch, Starter	1
20	3-2496	Cover Plate	1
21	3254-5	Lockwasher	2
22	3-2562	27" Wire	1
23	32103-12	Wing Nut	2

MAIN FRAME & FRONT AXLE ASSEMBLY

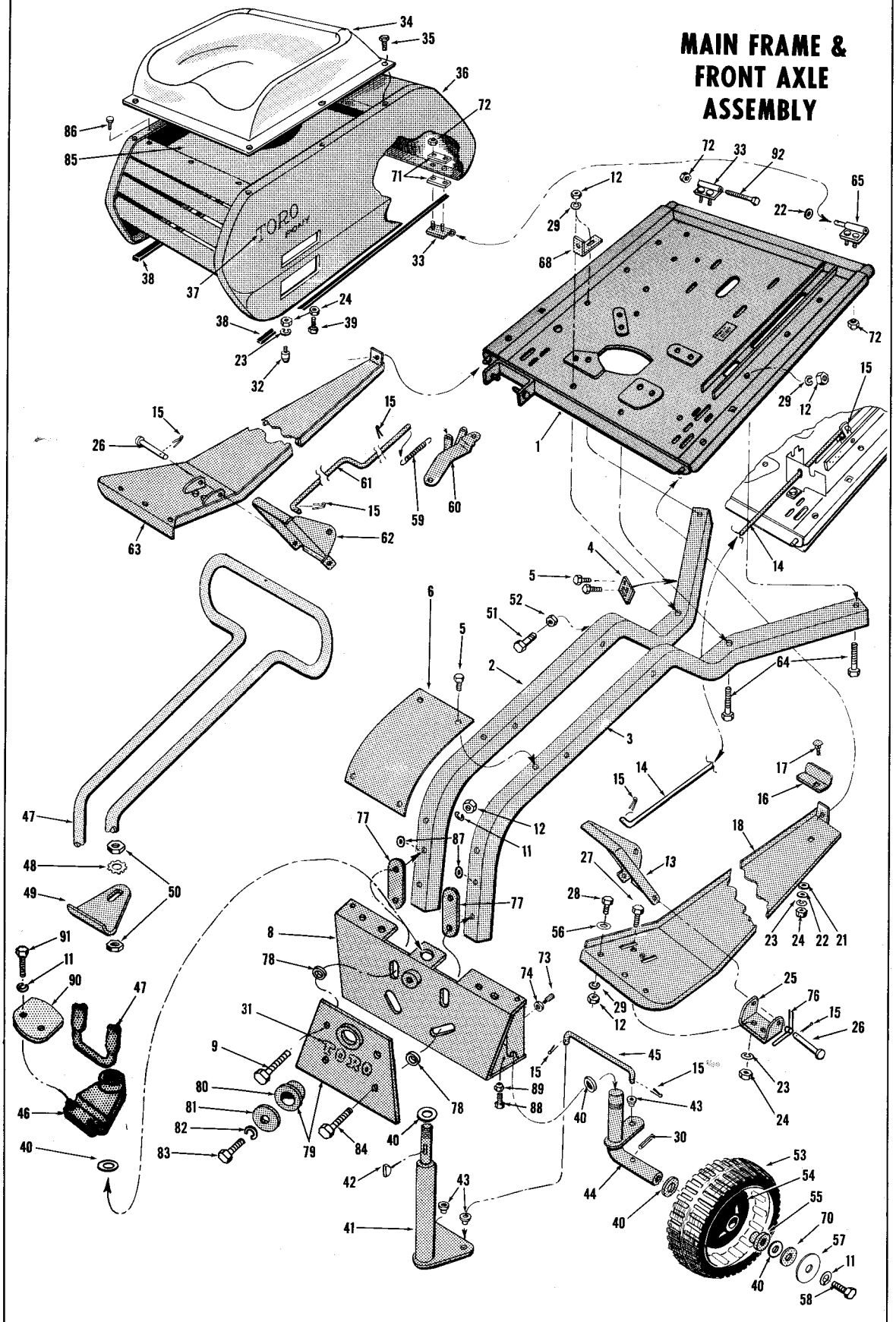

Drawing No. 7620-4

MAIN FRAME & FRONT AXLE ASSY. PARTS LIST

Ref. No.	Part No.	Description	No. Used
1	3-4080	Engine Base	1
2	3-2693	Frame, Right	1
3	3-2687	Frame, Left	1
4	3-2403	Clutch Rod Clip	1
5	32140-18	Screw x 3/8" Lg.	6
6	3-2257	Cover Plate	1
8	3-3380	Front Axle	1
9	323-31	3/8"-16 Capscrew x 2-3/8" Lg.	2
11	3253-21	3/8" Lockwasher Med.	8
12	3217-7	3/8" N.C. Nut, Reg.	12
13	3-3253	Foot Pedal, L.H.	1
14	3-2346	Brake Rod	1
15	3272-4	5/64" Cotterpin $\frac{3}{4}$" Lg.	10
16	3-2488	Shield, Muffler	1
17	3229-10	$\frac{1}{4}$" N.C. Carr. Bolt x $\frac{1}{2}$" Lg.	1
18	3-4040	Foot Rest, L.H.	1
21	3256-23	5/16" Cut Washer	1
22	3256-22	$\frac{1}{4}$" Cut Washer S.A.E.	1
23	3253-3	$\frac{1}{4}$" Lockwasher	7
24	3217-5	$\frac{1}{4}$" N.C. Nut	8
25	3-2326	Bracket Foot Pedal	2
26	3-2327	Pivot Pin, Foot Pedal	2
27	321-3	$\frac{1}{4}$" N.C. Capscrew x5/8" Lg.	4
28	323-4	3/8" N.C. Capscrew x$\frac{3}{4}$" Lg.	4
29	3253-21	3/8" Lockwasher	8
30	32121-16	3/16" Rollpin x 1" Lg.	2
31	3-1058	Decal	1
32	3-2351	Alignment Plug	2
33	3-2348	Hinge, Female	3
34	3-1851	Seat	1
35	32104-53	#10 S.M. Screw x 3/8" Lg.	6
36	3-4020	Shroud	1
*	3-1962	Decal, Shroud Rear	1
37	3-2483	Decal	2
38	3-2358	Rubber Cushion	2
39	3258-18	$\frac{1}{4}$" N.C. Screw (R.H.) x1'Lg.	1
40	3256-28	$\frac{3}{4}$" Cut Washer (S.A.E.)	6-8
41	3-2171	Steering Arm w/Bushings	1
42	3257-17	Key	1
43	3-3258	Bushing	4
44	3-3390	Wheel Spindle w/bush L.H.	1
*	3-3400	Wheel Spindle w/bush R.H.	1
45	3-2175	Tie Rod	2
46	3-4106	Pivot Clamp	1

Ref. No.	Part No.	Description	No. Used
47	3-2158	Steering Handle	1
48	3290-208	Lockwasher	1
49	3-1907	Handle Stop	1
50	3220-6	5/8"-18 Jam Nut	2
51	324-6	7/16" N.C. Capscrew x 1$\frac{1}{2}$" Lg.	1
52	3218-4	7/16" N.C. Jam Nut	1
53	3-1986	Tire	2
54	2-0179	Front Wheel Assy.	2
55	3-1992	Bushing	4
56	3256-4	3/8" Heavy Cut Washer	4
57	3-3391	Hub Cap	2
58	3211-4	3/8"-24 Capscrew x 1" Lg.	2
59	3-2462	Spring Overload	1
60	3-6860	Idler Arm	1
61	3-2696	Clutch Rod	1
62	3-3252	Foot Pedal, R.H.	1
63	3-4050	Foot Rest, R.H.	1
64	323-10	3/8" N.C. Capscrew x 2" Lg.	4
65	3-2354	Hinge Assy. Male	1
68	3-2568	Guide	1
70	3256-39	Washer	0-4
71	3-2571	Shim	4
72	32146-8	$\frac{1}{4}$" N.C. Locknut	9
73	3287-8	$\frac{1}{4}$" x $\frac{1}{2}$" Allen Set Screw	2
74	3218-1	$\frac{1}{4}$" Jam Nut	2
76	3-3163	Brake Return Spring	1
77	3-2672	Shim	2
78	3-2675	Spacer	4
79	3-3392	Front Plate w/Bushing	1
80	256-119	Bushing	1
81	WA-15A	Washer	1
82	3253-6	7/16" Lockwasher	1
83	3-2713	7/16" Capscrew x 1-3/16" Lg.	1
84	323-7	3/8" Capscrew x 1$\frac{1}{4}$" Lg.	2
85	3-3244	Baffle, Seat	1
86	32104-62	Screw, #12 x 3/8" Lg.	6
87	3256-24	Washer	0-2
88	3273-2	Capscrew	2
89	3296-6	Nut	2
90	3-4105	Clamp	1
91	323-6	Capscrew	2
92	321-14	Capscrew	1

*Not Illustrated

INSIST ON GENUINE TORO PARTS

REAR AXLE ASSEMBLY

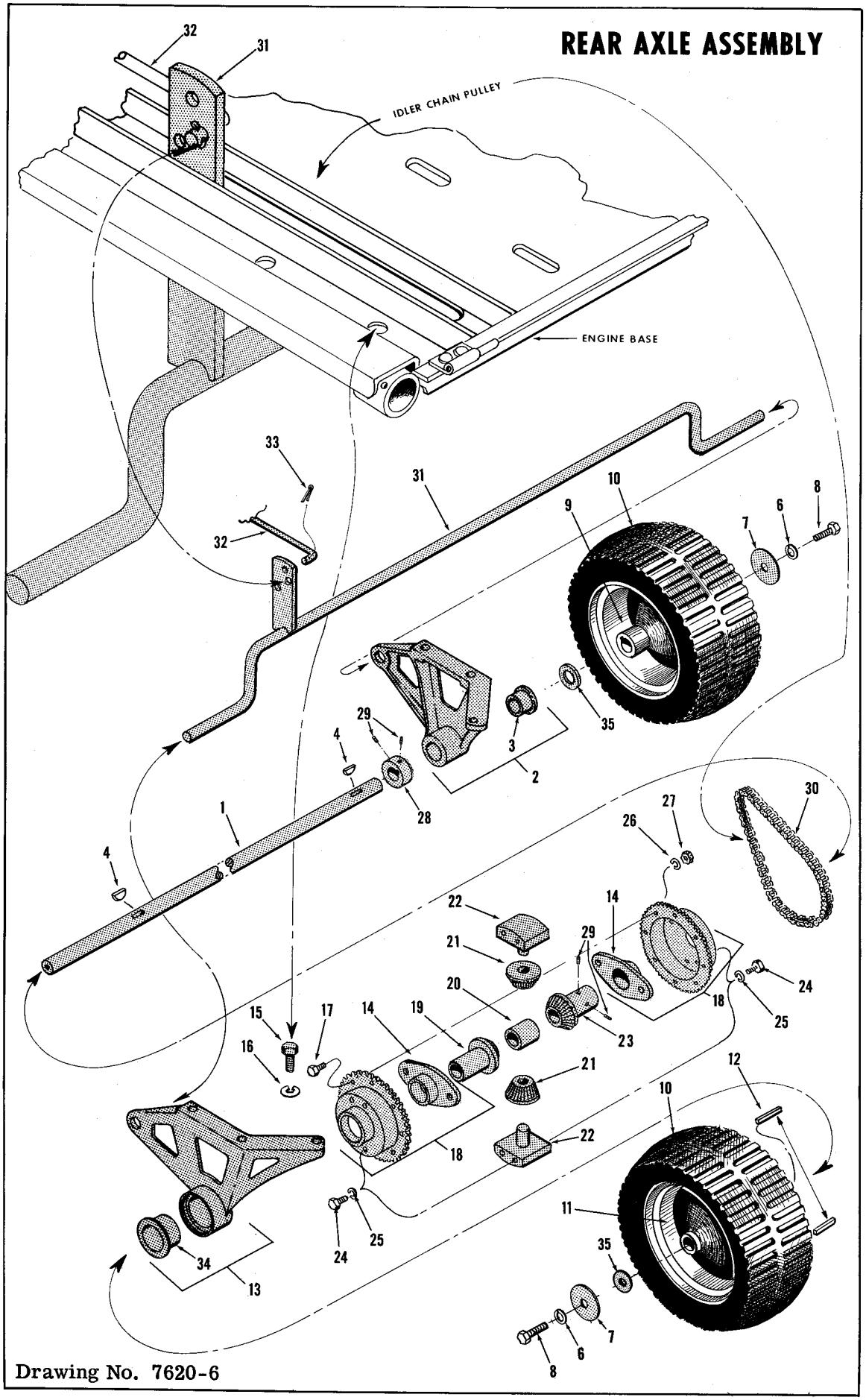

Drawing No. 7620-6

REAR AXLE ASSEMBLY PARTS LIST

Ref. No.	Part No.	Description	No. Used
1	3-2247	Axle, Rear	1
2	2-2089	Axle Bracket, w/Bushing, R. H.	1
3	K-31	Bushing	1
4	3257-26	Woodruff Key	2
6	3253-21	Shakeproof Lock-washer, 3/8"	2
7	3-3391	Hub Cap	2
8	3211-4	Capscrew, 3/8"N. F. x 1" Lg.	2
9	2-0169	Rear Wheel R. H. w/Tire	1
10	3-1987	Tire	2
11	2-2119	Rear Wheel L. H. w/Tire	1
12	32150-1	Key	2
13	2-2109	Axle Bracket w/Bush. L. H.	1
14	3-2290	Bushing	2
15	3211-2	Screw, 3/8"N. C. x $\frac{3}{4}$"	6
16	3253-21	Lockwasher	6
17	329-3	Capscrew, $\frac{1}{4}$"N. F. x 5/8" Lg.	8
18	2-0069	Sprocket Case & Bushing Assy.	2
19	3-2296	Side Gear, Diff, L. H.	1
20	3-2297	Spacer	1
21	3-2294	Pinion Gear	2
22	3-2293	Carrier, Diff. Pinion	2
23	3-2295	Side Gear Diff. R. H.	1
24	322-15	Capscrew, 5/6"N. C. x 9/16" Lg.	8
25	3253-4	Lockwasher, 5/16" Reg.	8
26	3253-3	Lockwasher, $\frac{1}{4}$" Reg.	8
27	3219-1	Nut, $\frac{1}{4}$"N. F. Full	8
28	3-2246	Collar	1
29	3246-3	Set Screw, 5/16"N. C. x 3/8" Lg.	4
30	3-2448	Roller Chain, Traction Drive	1
31	3-3450	Brake	1
32	3-2346	Brake Rod	1
33	3272-4	Cotter Pin	1
34	3-3014	Bushing	1
35	PK-232	Spacer	2-5

INSIST ON GENUINE TORO PARTS

Drawing No. 7620-8

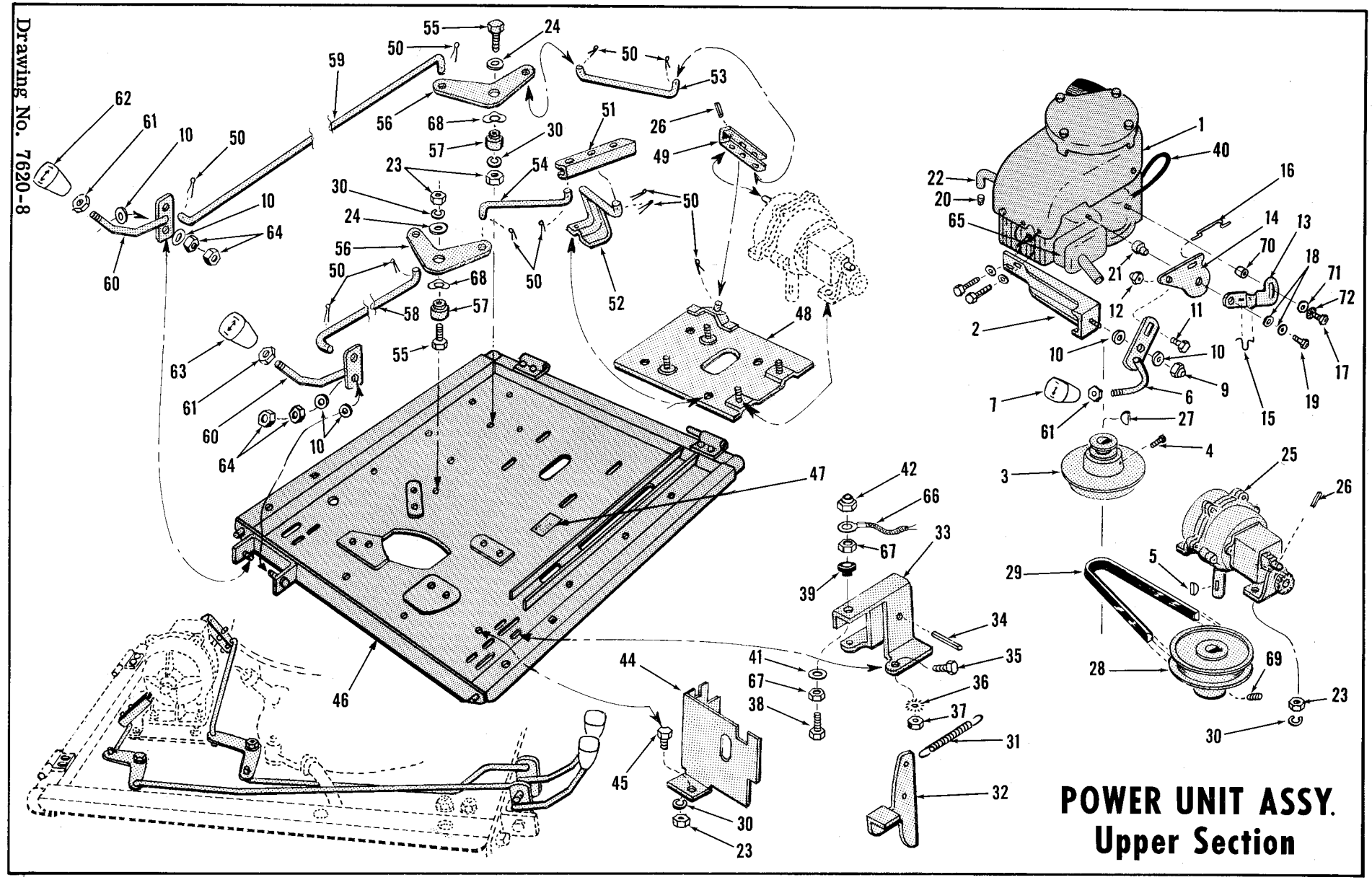

POWER UNIT ASSY. - UPPER SECTION

Ref. No.	Part No.	Description	No. Req.
1	221-192	Elec. Start	1
1	221-191	Recoil Start	1
2	3-2470	Bracket, Throttle	1
3	3-2602	Pulley, Engine	1
4	3243-5	Set Screw	2
5	3257-5	Key	1
6	3-3071	Throttle Arm	1
7	3-3660	Control Knob, Throt.	1
9	32127-35	Nut	1
10	3-2408	Washer, Control	6
11	3-2472	Throttle Screw	1
12	3296-8	Nut	1
13	3-4747	Bracket, Throttle Spring	1
14	3-2471	Bell Crank, Throttle	1
15	3-2475	Spring, Throttle Detent	1
16	3-2473	Throttle Wire #8	1
17	32140-37	Screw	1
18	3256-14	Washer	2
19	32140-24	Screw	1
20	281-7	Pipe Plug	1
21	3-2474	Spacer	1
22	3-2385	Drain Ext., Oil	1
23	3217-6	Nut	7
24	3256-23	Washer	2
25	3-2332	Transmission Assy.	1
26	32121-50	Roll Pin	2
27	3257-3	Key	1
28	3-2404	Pulley, Trans.	1
29	3-2451	Belt	1
30	3253-4	Lockwasher	7
31	3-4328	Spring-Interlock	1
32	3-2432	Bell Crank	1
33	3-2436	Bracket, Bell Crank	1
34	32121-45	Roll Pin	1
35	321-2	Screw	2
36	3290-201	Lockwasher	2
37	3217-5	Nut	2
38	3290-124	Screw	1
39	3-2435	Washer	1
40	291-6	Fuel Line	1
41	3-2433	Washer	1
42	3296-9	Nut	1
44	3-2388	Baffle, Carb. & Muffler	1
45	322-2	Screw	1
46	3-4080	Engine Base	1
47	Z-121-29	Decal (Ser. & Pat.)	1
48	3-2397	Mtg. Plate, Trans.	1
49	3-2423	Arm, Activating - Fwd. & Rev.	1
50	3272-4	Cotter Pin	11
51	3-2424	Arm, Activating	1
52	3-2410	Bracket, Pivot	1
53	3-2422	Control Rod, Fwd. - Rev., Rear	1
54	3-2417	Control Rod, Hi-Lo, Rear	1
55	322-6	Screw	2
56	3-2413	Bell Crank	2
57	3-2418	Bushing, Bell Crank	2
58	3-2416	Control Rod, Hi-Lo, Front	1
59	3-2426	Control Rod, Fwd. - Rev., Front	1
60	3-2767	Control Arm	2
61	3218-3	Nut	3
62	3-2445	Control Knob - Fwd. & Rev.	1
63	3-2446	Control Knob, Hi-Lo	1
64	3218-2	Nut	4
65	3-2490	Muffler	1
66	3-2561	10" Wire	1
67	3217-29	Nut	2
68	3290-221	Spring Washer	2
69	3243-2	Set Screw	1
70	3-4748	Spacer	1
71	3256-21	Cutwasher	1
72	3255-20	Ext. L. W.	1

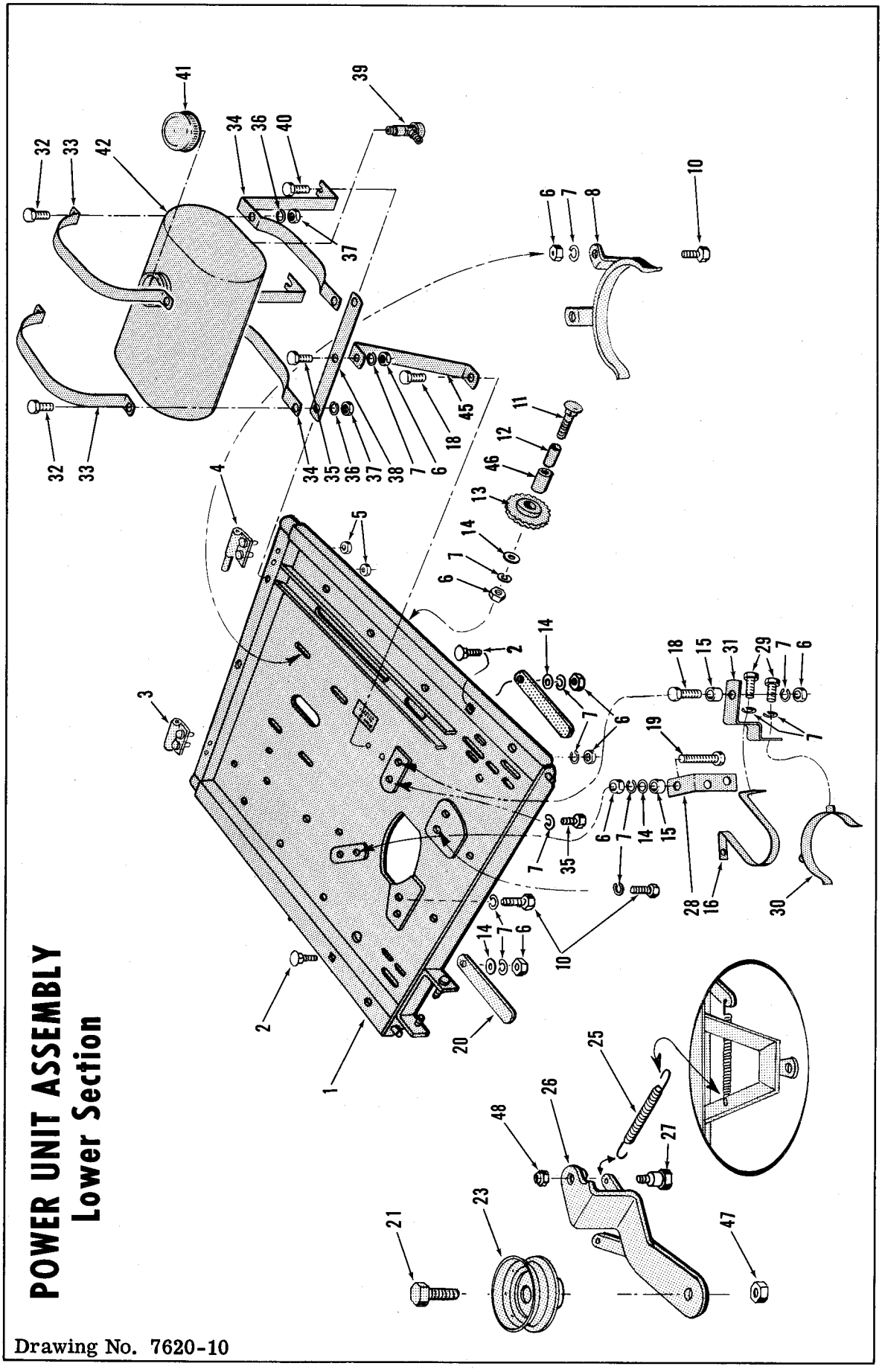

Drawing No. 7620-10

POWER UNIT ASSY. - LOWER SECTION

Ref. No.	Part No.	Description	No. Req.
1	3-4080	Engine Base	1
2	3230-1	Bolt	2
3	3-2348	Hinge Assy., female	1
4	3-2354	Hinge Assy., male	1
5	32146-8	Locknut	6
6	3217-6	Nut	8
7	3253-4	Lockwasher	17
8	3-4270	Belt Ret'ner, Trans.	1
10	322-5	Screw	6
11	3230-17	Bolt	1
12	3-3261	Spacer	1
13	3-4380	Idler, Sprkt, w/bush	1
14	3256-23	Washer, cut	4
15	3-2381	Spacer	2
16	3-3352	Belt Retainer, Eng. to Trans.	1
18	322-6	Screw	1
19	322-10	Screw	1
20	3-2487	Spring, Seat	2
21	3211-6	Screw	1
23	3-3945	Idler Pulley	1
25	3-2461	Spring, Return	1
26	3-6860	Arm, Idler	1
27	3-4752	Shoulder Bolt	1
28	3-3347	Bkt, Belt Retainer	1
29	322-2	Screw	4
30	3-4280	Retainer, Belt, Eng. to Cutter	1
31	3-3353	Bkt., Belt Retainer	1
32	3290-126	Screw	4
33	3-3241	Band	2
34	3-3237	Bracket	2
35	322-3	Screw	2
36	3253-17	Lockwasher	4
37	3217-26	Nut, Hex	4
38	3-3242	Plate	1
†39	28571	Strainer & Ftg., Fuel	1
40	321-3	Screw	2
†41	27799	Cap Assy, Fuel Filler	1
42	3-3235	Tank, Gas	1
45	3-3238	Bracket Support	1
46	256-118	Bushing	1
47	32127-14	Locknut	1
48	3296-29	Stop Nut	1

† Engine Manufacturer's Part Number

IMPORTANT ORDERING INSTRUCTIONS

To insure getting correct parts without delay, please furnish the following information:

1. Serial number of your mower as shown on the name plate.
2. Part number, description and quantity of each part required.
3. State whether parts should be shipped by mail or express. All repair parts are shipped F.O.B. factory.
4. Name and address where parts are to be shipped.
5. Do not order by reference number; use part number only.
6. Repair parts are available from your Toro distributor or dealer.

CUTTING UNIT MECHANISM ASSEMBLY

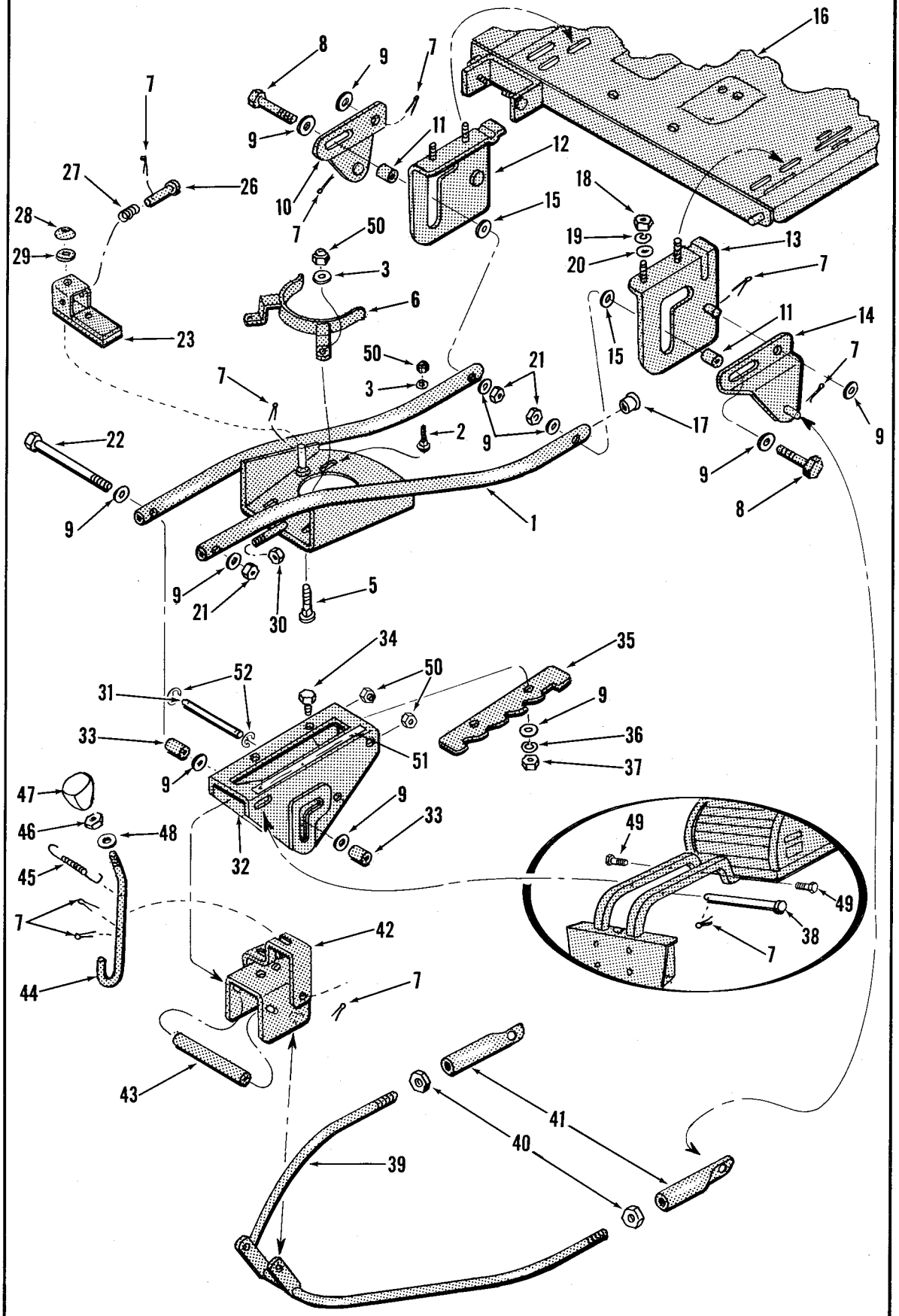

Drawing No. 7620-12

CUTTING UNIT MECHANISM ASSEMBLY

Ref. No.	Part No.	Description	No. Used
1	3-2110	Mounting Bracket Cutter Housing	1
2	3231-12	Bolt, 3/8" N.C. x 7/8" Carriage	2
3	3256-24	Washer, 5/8"S.A.E. Cut	4
5	3231-2	Bolt, 3/8"N.C. x 1" Carr.	2
6	3-4260	Belt Retainer	1
7	3272-4	Cotter Pin, 5/64" x 3/4"	11
8	322-8	Screw, 5/16"N.C. x 1-5/8"	2
9	3256-23	Washer, 5/16" S.A.E. Cut	12-14
10	3-2682	Bell Crank, Rear-Right	1
11	3-2107	Spacer	2
12	3-2100	Bracket, Height of Cut, Rear-Right	1
13	3-2095	Bracket, Height of Cut, Rear-Left	1
14	3-2683	Bell Crank, Rear-Left	1
15	3256-25	Washer, 7/16" S.A.E. Cut	2
16	3-4080	Engine Base	1
17	PD-25B	Plug Button	1
18	3217-7	Nut, 3/8"N.C.	4
19	3253-21	Lockwsher.,3/8"Reg	4
20	3256-24	Washer, 3/8"S.A.E. Cut	4

Ref. No.	Part No.	Description	No. Used
21	3296-29	Nut, 5/16"N.C.Stop	3
22	322-28	Screw, 5/16"N.C.x 6"	1
23	3-2338	Brake Assy.	1
26	3-2342	Pin, Actuating	1
27	3-2341	Spring, Blade Brake	1
28	3290-211	Spring Washer	1
29	3256-3	Washer, 5/16"Med Ct.	1
30	32146-5	Nut, 5/16"N.C. Stop	1
31	3-2092	Shaft, Pivot	1
32	3-2270	Bracket, Height of Cut, Front	1
33	3-2106	Spacer	2
34	322-2	Screw, 5/16"N.C. x 5/8"	2
35	3-2085	Selector Plate	1
36	3253-4	Lockwsher., 5/16"Reg.	2
37	3217-6	Nut, 5/16"N.C.	2
38	3-2128	Lock Pin	1
39	3-2101	Control Bail	1
40	3218-4	Nut, 7/16"N.C. Jam	2
41	3-2104	End Control, Bail	2
42	3-2090	Bell Crank, Front	1
43	3-2105	Spacer	1
44	3-2084	Handle-Height of Cut	1
45	3-1982	Spring, Return	1
46	3218-3	Nut, 3/8"N.C. Jam	1
47	3-2450	Control Knob	1
48	3256-4	Washer	1
49	323-10	Capscrew, 3/8"N.C.	2
50	3296-39	Nut, 3/8"N.C. Stop	6
51	3-2460	Decal-Ht. of Cut	1
52	32120-78	Retaining Ring	2

ROTARY CUTTING UNIT ASSEMBLY

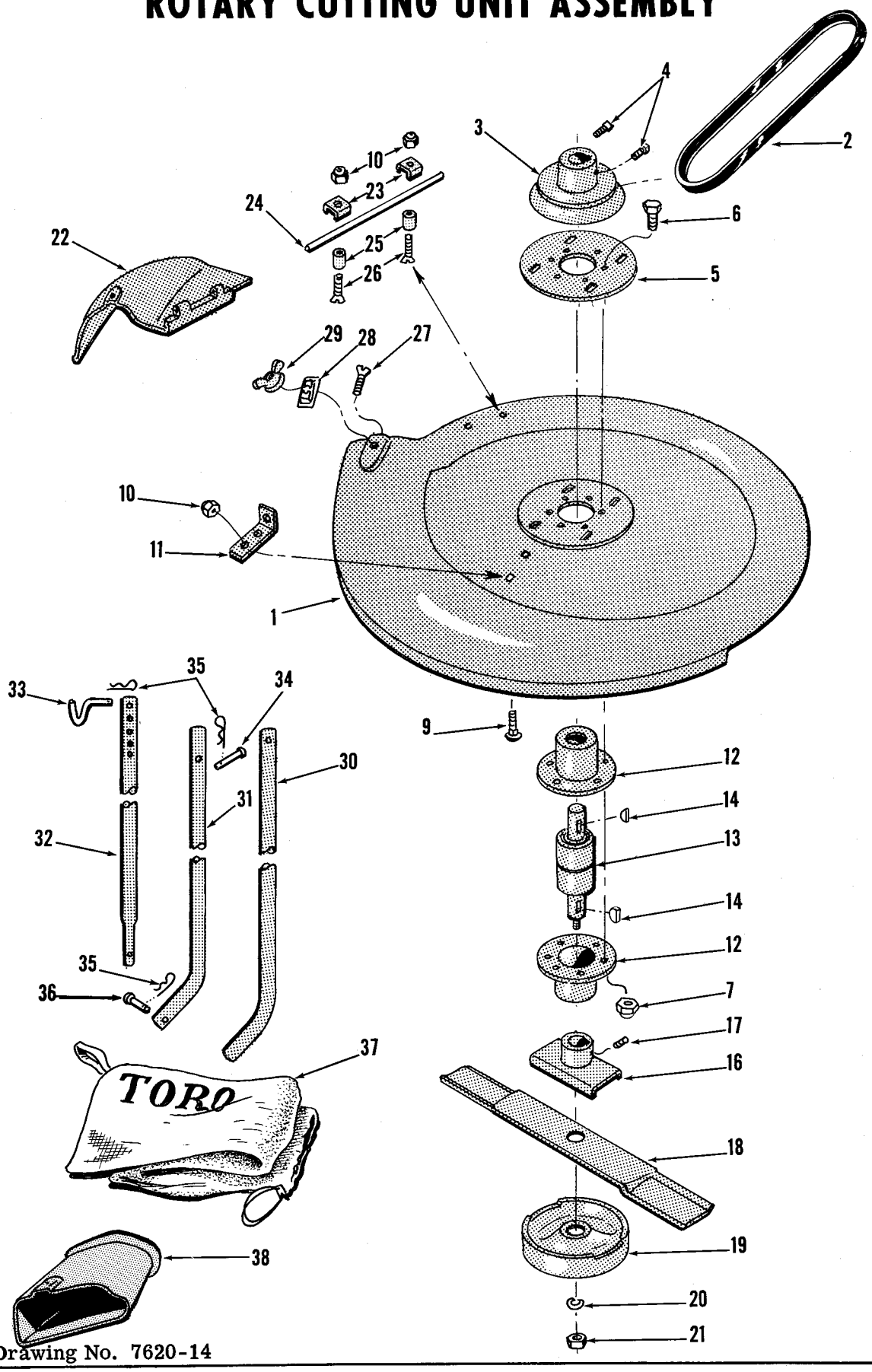

Drawing No. 7620-14

ROTARY CUTTING UNIT ASSY. PARTS LIST

Ref. No.	Part No.	Description	No. Used
1	3-4366	Housing	1
2	3-2604	Belt, Drive	1
3	3-2127	Pulley, Cutter Drive	1
4	3243-3	Set Screw	2
5	3-2118	Plate, Reinforcement	1
6	322-5	Screw, 5/16"N.C. x 1"	6
7	3296-29	Nut, 5/16"N.C. Stop	6
9	3229-11	Bolt, $\frac{1}{4}$"N.C. x 5/8"	2
10	3296-8	Nut, $\frac{1}{4}$"N.C. Stop	4
11	3-2121	Bracket, Belt Adj.	1
12	3-1931	Housing, Bearing	2
13	3-2963	Spindle Bearing	1
14	3257-23	Key, Woodruff	2
16	3-5220	Blade Retainer	1
17	3247-2	Set Screw	1
18	3-3804	Blade	1
19	3-3803	Anti-Scalp Cup	1
20	3253-7	Lockwasher	1
21	32127-41	Locknut	1
22	3-0674	Deflector	1

Ref. No.	Part No.	Description	No. Used
23	3-2123	Clamp	2
24	3-1176	Hinge Pin	1
25	3-2122	Spacer	2
26	32108-7	Screw, $\frac{1}{4}$"N.C. x $1\frac{1}{4}$"Flat Hd.	2
27	32108-21	Screw, 5/16"N.C. x 7/8" Flat Hd.	1
28	3290-184	Speednut	1
29	3-2625	Wing Nut, 5/16"	1
30	3-2428	Bag Arm, Right	1
31	3-2430	Bag Arm, Forward Sect., Left	1
32	3-2431	Bag Arm, Rear Sect., Left	1
33	3-2427	Bag Hook	1
34	3-2438	Pin, Upper Bag Arm	1
35	3290-255	Hairpin Cotter	3
36	3-2440	Pin, Lower Bag Arm	1
37	3-1695	Bag Assy.	1
38	3-6220	Bag Chute	1

INSIST ON GENUINE TORO PARTS

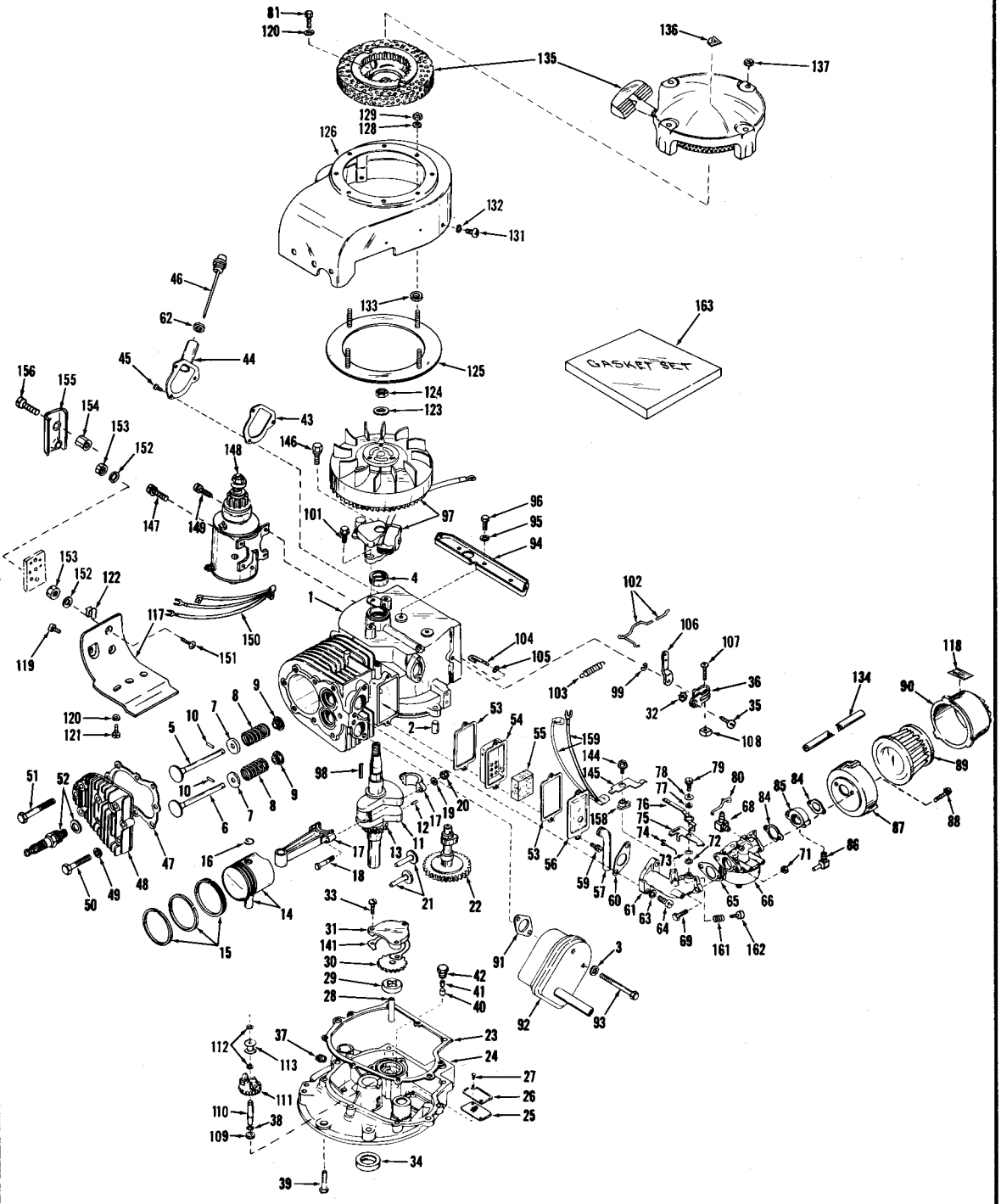

Drawing No. 7620-16

PARTS LIST For ENGINE Nos. VXT45A-3012 & VXT45A-3013

Ref. No.	Part No.	Description	No. Req.
1	30627	Cylinder Assy. (Incl. Nos. 2 & 4)	1
2	27652	Pin, Dowel	2
3	8274	Lockwasher	2
4	*27876	Seal, Oil	1
5	27877	Valve, Intake(Std.)	1
5	27879	Valve, Intake (1/32" oversize)	1
6	27878	Valve, Exhaust(Std.)	1
6	27880	Valve, Exhaust (1/32" oversize)	1
7	27882	Cap, Upper Valve Spring	2
8	27881	Spring, Valve	2
9	27883	Cap, Lower Valve Spring	2
10	20810	Pin, Valve Spring Retaining	2
11	29554	Crankshaft Assy. (Incl. Nos. 12 & 13)	1
12	29783	Pin, Crankshaft gear	1
13	27884	Gear, Crankshaft	1
14	30662	Piston & Pin Assy. (Std.) (Incl. 2 of No. 16)	1
14	30663	Piston & Pin Assy. (.010 oversize) (Incl. 2 of No. 16)	1
14	30664	Piston & Pin Assy. (.020 oversize) (Incl. 2 of No. 16)	
15	28935	Ring Set (Std.)	1
15	28936	Ring Set (.010 oversize)	1
15	28937	Ring Set (.020 oversize)	1
16	27888	Ring, Piston pin retaining	2
17	27892	Rod Assy., connecting(Incl. #18, 19, 20)	1
18	21718	Bolt, Connect. Rod	2
19	26073	Washer, connecting rod bolt	2
20	28264	Nut, Hex	2
21	27893	Lifter, Valve	2
22	30665	Camshaft	1
23	*30667	Gasket, Mtg. Flange	1
24	30690	Flange Assy., Mtg. (Incl. Nos. 25, 26, 27, 34, 37, 40, 41, 42, 110 & 141)	1
25	29325	Screen, Oil Filter	1
26	29326	Retainer, Oil Filter Screen	1
27	29117	Screw, Slotted Hex Hd. Self Tap	2
28	27652	Pin, Oil pump Gear Pilot	1
29	27648	Gear, Oil pump external	1
30	27643	Gear, Oil pump drive	1
31	27653	Cover, Oil pump	1
32	29918	Lockwasher, #8E. T.	1
33	29517	Screw, Phillips Fl. Hd. Sems	3
34	*27897	Seal, Oil	1
35	29919	Screw, Pan, slotted hd.	1
36	29916	Clamp, Governor lever	1
37	27642	Plug, oil drain, sq. hd.	1
38	30590	Washer, Shim	1
39	650488	Screw, Hex Hd. Cap. Sems	7
40	28746	Plunger, Oil Pressure Relief	1
41	28745	Spring, Compression	1
42	28744	Plug, Oil pressure relief valve	1
43	*28747	Gasket, Oil filler tube	1
44	29759	Tube, Oil filler	1
45	28749	Screw, Rd. Hd. Sems	3
46	29760	Dipstick, Oil	1
47	*28938	Gasket, Cyl. Hd.	1
48	30677	Head, Cylinder	1
49	26073	Washer, Cyl. Head	8
50	28262	Screw, Hex Hd. Cap	3
51	28261	Screw, Hex Hd. Cap	5
52	21943	Plug, Spark	1
53	*27896	Gasket, Valve chamber cover	2
54	28423	Body Assy., breather	1
55	28424	Element, Filter	1
56	28425	Cover, valve chamber	1
57	27627	Tube, Breather	1
59	650128	Screw, Phillips Fil. Hd. Sems	2
60	*27915	Gasket, Intake Pipe	1
61	29327	Pipe, Intake	1
62	*29673	Gasket, oil filler	1
63	8274	Lockwasher, Med. Split	2
64	29440	Screw, Phillips Fil. Hd. Mach.	2
65	*27913	Gasket, Carburetor	1
66	630885	Carburetor	1
68	28566	Fitting, Fuel Line	1
69	6201	Screw, Hex Hd. Cap	2
71	29752	Nut, Hex Lock	2
72	27830	Washer, Flat	1
73	28558	Washer, Spring wave	1
74	29484	Spring, control lever	1
75	29188	Lever, Control	1
76	30130	Lever, R. P. M. adj.	1

(CONTINUED NEXT PAGE)

ENGINE PARTS LIST - Continued

Ref. No.	Part No.	Description	No. Req.
77	28562	Bushing, R. P. M. Adj. Lever	1
78	28563	Washer, plain flat	1
79	28762	Screw, slot. hex hd.	1
80	30670	Link, Choke	1
81	650216	Screw, Hex Hd. Cap	1
84	*27272	Gasket, Air cleaner Brkt. to Carb.	2
85	30672	Flange, Air cleaner	1
86	30675	Fitting, Breather	1
87	30673	Bracket, Air cleaner	1
88	650514	Screw, Fil. hd. sems	2
89	30727	Element, Air cleaner	1
90	30605	Body, Air cleaner	1
91	*27930	Gasket, Muff. flange	1
92	29681	Muffler Assy.	1
93	27931	Screw, Hex hd. cap	2
94	28738	Bracket, blower hsg. (Incl. #131 & #132)	1
95	8303	Lockwasher, Heavy Split	3
96	650216	Screw, Hex hd. cap	3
97	610674	Magneto, Tecumseh (Identified by "T" after eng. model #)	1
97	610675	Magneto, Tecumseh (Identified by "P" after eng. model #)	1
98	27902	Key, Flywheel	1
99	30587	Ring, Retainer	1
101	650489	Screw, Hex Hd. cap. sems	2
102	30671	Link, Governor	1
103	29332	Spring, Extension	1
104	30669	Rod, Governor (Incl. Nos. 99 & 105)	1
105	28277	Washer, Flat	1
106	29992	Lever, Governor	1
107	29826	Screw, Allen socket Hd. Mach.	1
108	29216	Nut, Square	1
109	29335	Spacer	1
110	30668	Shaft, Mech. Gov.	1
111	30591	Gear Assy., Gov.	1
112	29193	Ring, Retaining	2
113	30588	Spool	1
117	30622	Ext., Blower Hsg.	1
118	30002	Decal, Air cleaner	1
119	650128	Screw, fil. hd. sems	1
120	8303	Lockwasher, Heavy split	2
121	650306	Screw, hex hd. cap	1
122	27275	Clip, Hi Tension wire retaining	1
123	650490	Washer, Flat	1
124	8116	Nut, Hex	1
125	28318	Ring Assy., Blower Hsg. Reinforcing	1
126	28267	Blower Housing	1
128	29689	Washer, Flat	4
129	8112	Nut, Hex	4
131	29596	Screw, Fil. hd. Mach. P. C. R.	2
132	8274	Lockwasher, Med. split	2
133	8345	Washer, Flat	4
134	29111	Fuel Line	1
135	28319	Starter Assy., Rewind	1
136	30595	Decal, Ezee Start	1
137	29752	Nut, Lockwasher	4
141	*28803	Gasket, shim (.005 thick)(use as req.)	
141	*28804	Gasket, shim (.010 thick)(use as req.)	
144	28762	Screw, slotted hex hd.	1
145	29389	Terminal	1
158	29209	Washer	1
159	29682	Wire, Ground	1
161	28569	Spring, compression	1
162	6674	Screw, Speed Adj. Slotted Hd.	1
163	30740	Gasket set (Incl. items marked *)	1

ENGINE No. VT VXT45A-3013 (Electric Start Only)

Ref. No.	Part No.	Description	No. Req.
97	29692	Magneto, Wico alternator	1
97	610681	Magneto, Tecumseh alternator (Identified by "P" after eng. model no.)	1
126	28646	Housing, Blower	1
146	650516	Screw, hex hd. sems (Use with #610681 magneto)	1
147	30063	Screw, fil. hd. sems (Use with #610681 magneto)	1
148	29965	Motor, Starter Electric	1
149	650191	Screw, fil. hd. sems	4
150	29703	Wire, Ground (Use with #29692 mag.)	1
150	30831	Wire, Ground (Use with #610681 mag.)	1
151	28726	Screw, rd. hd. mach.	2
152	28727	Lockwasher	5
153	28728	Nut, Hex	3
154	30065	Nut, Hex	1
155	30064	Cover, Panel	1
156	30066	Screw, rd. hd. mach.	1

* Gasket Set

STARTING MOTOR No. 29965

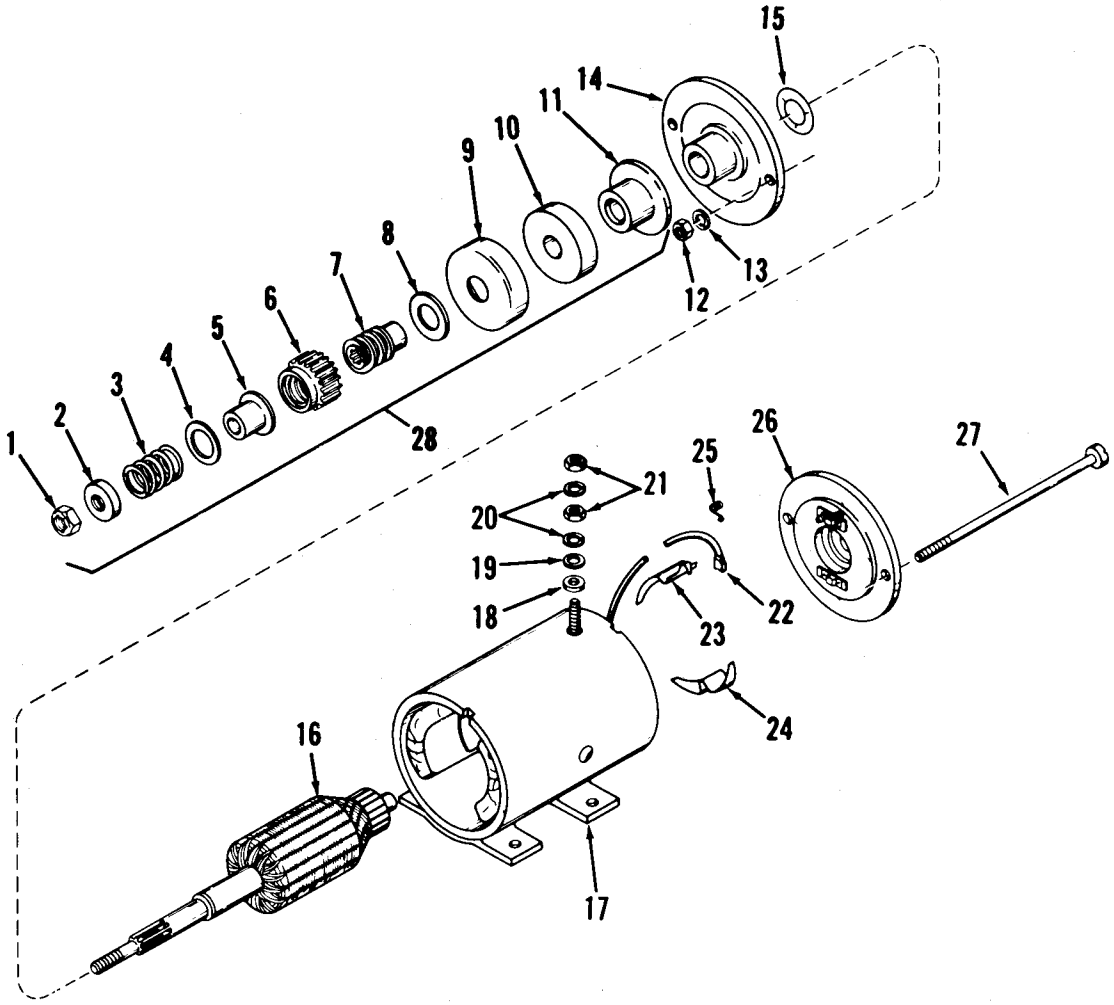

Drawing No. 7620-19

Ref. No.	Part No.	Description	No. Req.
	29965	Starting Motor, compl	1
1	30004	Nut, Elastic Stop	1
2	28692	Stop, Pinion	1
3	28693	Spring, Anti-drift	1
4	28694	Washer, Pinion	1
5	28695	Sleeve, Anti-drift	1
6	30005	Gear, Pinion	1
7	30006	Shaft, Screw	1
8	30007	Washer, Thrust	1
9	30008	Cup, Cushion	1
10	30009	Cushion, Rubber	1
11	30010	Washer, Thrust	1
12	30011	Nut, Securing	2
13	30012	Washer, Lock	2
14	30013	Cap, Assy, drive end (Incl. bearings)	1
15	30014	Washer, Spacing(.010 thick)use as req.	
15	30015	Washer, Spacing(.020 thick)use as req.	

Ref. No.	Part No.	Description	No. Req.
16	30016	Armature	1
17	30017	Housing Assy(Incl. Pole Shoes, Field Coils, Term. Post, Mounting Bracket, Nos. 18 thru 21, 23, 24, and 1 of 22)	1
18	28707	Washer, Insulating	1
19	28708	Washer, Plain	1
20	28709	Washer, Lock	2
21	28710	Nut, Hex	2
22	30018	Brush	2
23	30019	Insulation	1
24	30020	Insulation	1
25	30021	Spring, Brush	2
26	30022	End Cap Assy, commutator (Incl. Ref. #25 and 1 of 22)	1
27	30023	Bolt, Thru	2
28	30003	Drive Assy, compl. (Incl. #1 thru #11)	1

CARBURETOR No. 630885

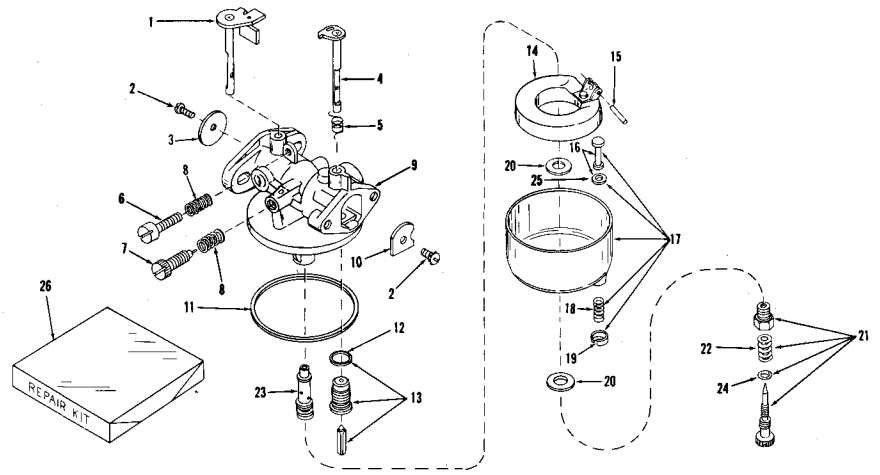

Drawing No. 7620-20A

RECOIL STARTER No. 28319

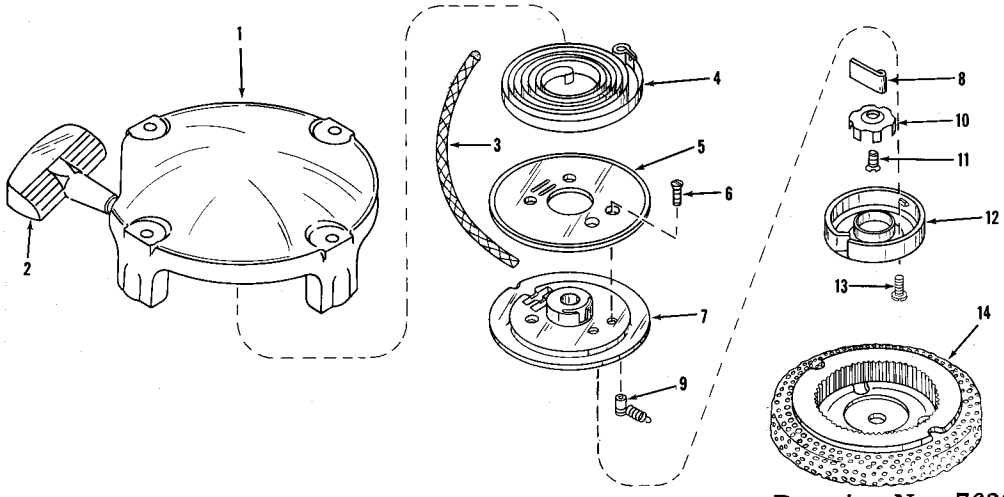

Drawing No. 7620-20B

ALTERNATOR MAGNETO No. 610681 (Electric Start)

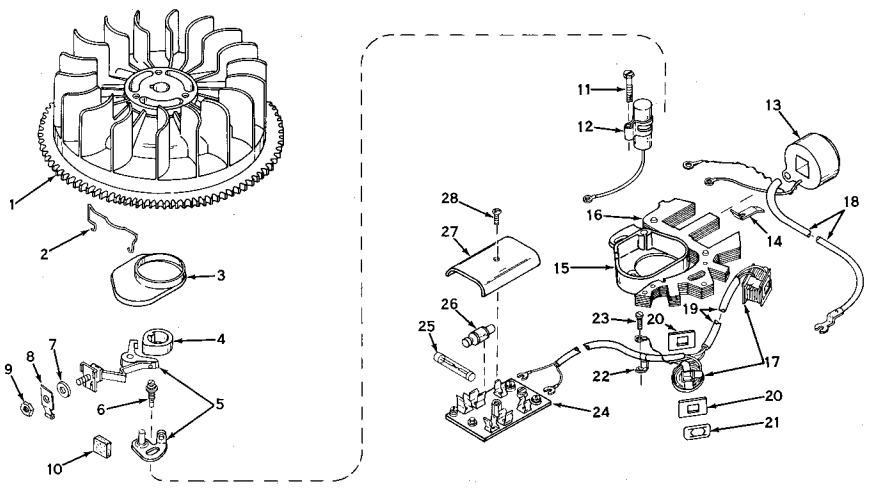

Drawing No. 7620-20C

CARBURETOR No. 630885

Ref. No.	Part No.	Description	No. Req.
	630885	Carburetor	1
1	30739	Shaft Assy.,throttle	1
2	30357	Screw, Sems pan hd.	2
3	30726	Valve, Throttle	1
4	30353	Shaft Assy., Choke	1
5	30358	Spring, Choke Shaft	1
6	27115	Screw, throttle adj.	1
7	*27112	Needle, Idle	1
8	27114	Spring, Idle adj. needle	2
9	30738	Body Assy., Carb.	1
10	28924	Valve, Choke	1
11	30356	Gasket, body-to-bowl	1
12	27108	Gasket, Float Valve Seat	1
13	29154	Valve, Seat & Gasket, Matched float	1
14	30354	Float Assembly	1
15	*27106	Shaft, Float	1
16	27136	Stem & Gskt. Assy., Bowl drain	1
17	30350	Bowl & Drain Assy., Fuel	1
18	27137	Spring, Bowl drain	1
19	27138	Ret'ner, Bowl dr. stem	1
20	*27110	Gasket, Bowl-to-body	2
21	*28945	Needle Assy., Pwr. Adj.(Incl. #22 & 24)	1
22	630786	Spring, Power Needle	1
23	30355	Nozzle	1
24	*27544	"O" Ring	1
25	27554	Gasket, bowl drain	1
26	30359	Repair Kit(Incl. items marked*)	1

* Repair Kit

RECOIL STARTER No. 28319

Ref. No.	Part No.	Description	No. Req.
	28319	Starter Assy. (Incl. Nos. 1-14)	1
1	28320	Cover	1
2	590288	Handle	1
3	28288	Rope	1
4	28289	Spring, Rewind	1
5	28287	Pulley, Sheave	1
6	590275	Screw, S. T. flat hd.	4
7	28286	Hub, Pulley	1
8	590148	Dog, Starter	1
9	27515	Bush. & Spring Assy.	1
10	590151	Brake	1
11	590150	Screw, Brake, flat hd.	1
12	590153	Retainer	1
13	590152	Screw, S. T.	2
14	29709	Hub & Screen Assy.	1

ALTERNATOR MAGNETO No. 610681 (Electric Start)

Ref. No.	Part No.	Description	No. Req.
1	30755	Flywheel	1
2	30836	Spring, Dust Cover	1
3	30550	Cover, Dust	1
4	30553	Cam, Breaker	1
5	30547	Breaker Assy.	1
6	29181	Screw & Lockwasher	1
7	610385	Washer, Terminal	1
8	30843	Tab, Terminal	1
9	610408	Nut, Terminal	1
10	30549	Felt, Cam wiper	1
11	610593	Screw, Condenser fastening	1
12	30548	Condenser	1
13	30546	Coil	1
14	29629	Spring, Coil wedge	1
15	30833	Stator Plate Assy. (Incl. #2, 3, & 5 - 28)	1
16	30834	Core & Plate Group	1
17	30835	Gen. Coils & Leads	1
18	30554	Wire, Lead	1
19	30840	Sleeve, Insulation	1
20	30838	Shield, Coil	4
21	30839	Clip, Coil fastening	2
22	30837	Clip, Ground	1
23	610288	Screw, Ground term.	1
24	30841	Plate, Rectifier(not incl. fuse & rectifiers)	1
25	29561	Fuse	1
26	30842	Rectifier	2
27	30064	Cover, Rect. panel	1
28	30066	Screw, Rd. Hd. mach.	1

WICO MAGNETO No. 29692 (Electric Start)

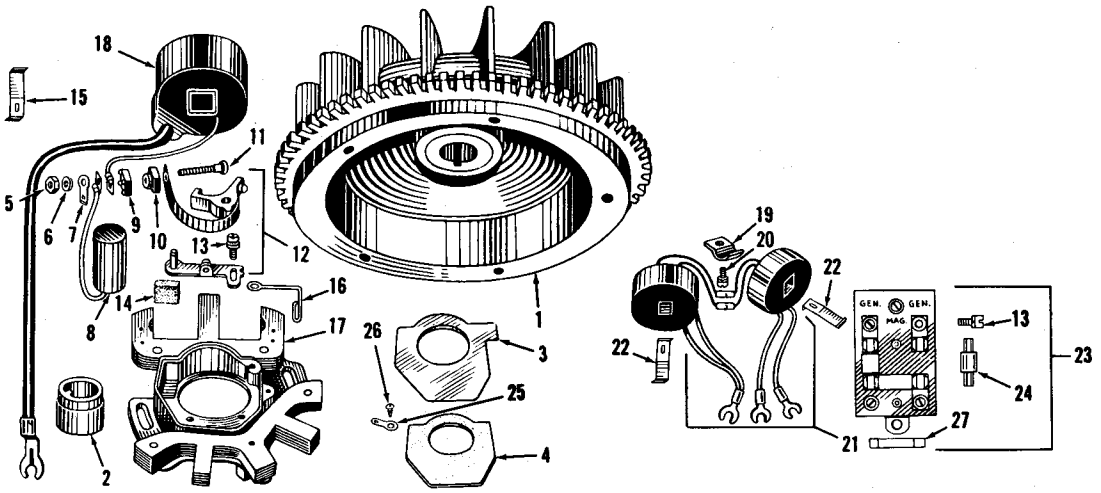

Drawing No. 7620-22A

MAGNETO No. 610674

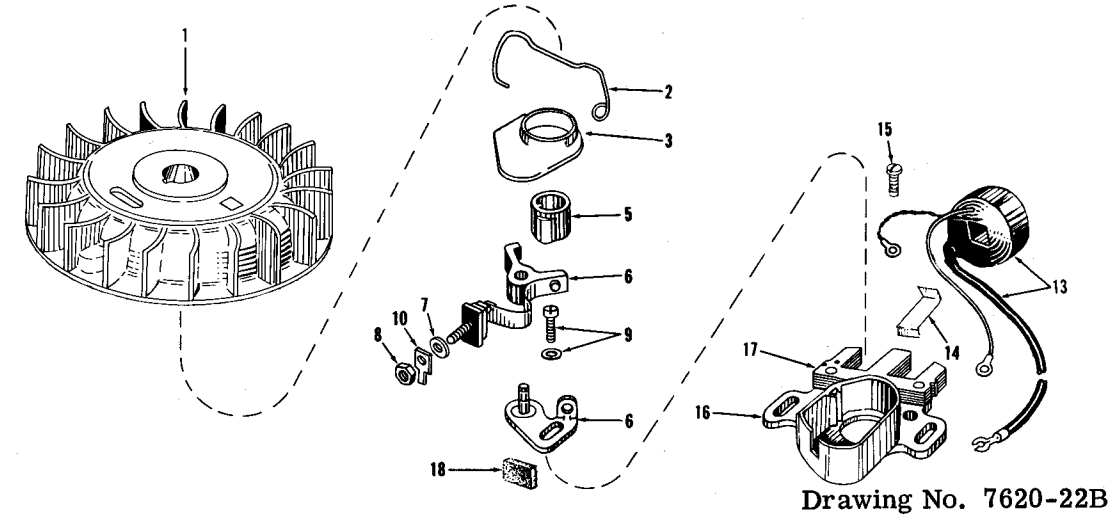

Drawing No. 7620-22B

MAGNETO No. 610675

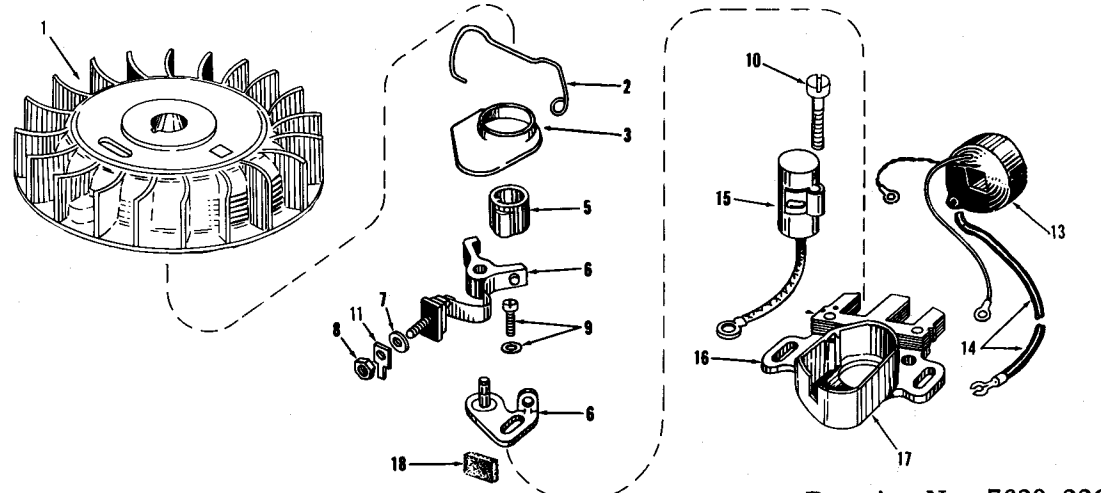

Drawing No. 7620-22C

WICO MAGNETO No. 29692 (Electric Start)

Ref. No.	Part No.	Description	No. Req.
1	29708	Flywheel	1
2	28515	Cam, Breaker	1
3	28514	Cover, Breaker box	1
4	28513	Gasket, Breaker box cover	1
5	7962	Nut, Hex, #6-32	1
6	22112	Lockwasher, split #6	1
7	28519	Terminal	1
8	29559	Condenser	1
9	27523	Insulator, Outside	1
10	27524	Insulator, Inside	1
11	27525	Stud, Connecting	1
12	28524	Contact Assy., breaker	1
13	28525	Screw & Lockwasher	5
14	25525	Felt, Cam Wiper	1
15	27528	Spring, Coil wedge	1
16	27529	Spring, Cover	1
17	28523	Plate Group, stator	1
18	28259	Coil & Lead Wire, Ignition	1
19	28526	Clamp, Condenser	1
20	610435	Screw & Lockwasher	1
21	29558	Coils & Lead Wires, Generating	1
22	28522	Spring, Coil Wedge	2
23	29560	Plate Assy., Rectifier(Incl. 5 #20 & 2 #24	1
24	28521	Rectifier, Silicon	2
25	28686	Clamp, Gen. Lead	2
26	610410	Screw, Lead Clamp	1
27	29561	Fuse	1

MAGNETO No. 610674

Ref. No.	Part No.	Description	No. Req.
1	30555	Flywheel	1
2	30551	Spring, breaker box cover	1
3	30550	Cover, Breaker box	1
5	30553	Cam, Breaker	1
6	30547	Breaker Assy.	1
7	610385	Washer, Terminal	1
8	610408	Nut, Terminal	1
9	29181	Screw & Washer, Breaker	1
10	29686	Tab, ground term.	1
13	30560	Coil & Lead Wire	1
14	29629	Spring, Coil Wedge	1
15	30562	Screw, Ground	1
16	30545	Core & Plate Group	1
17	30561	Stator Assy. (Incl. Nos. 2 thru 18	1
18	30549	Felt, Cam Wiper	1

MAGNETO No. 610675

Ref. No.	Part No.	Description	No. Req.
1	30555	Flywheel	1
2	30551	Spring, breaker box	1
3	30550	Cover, Breaker Box Dust	1
5	30553	Cam, Breaker	1
6	30547	Breaker Assy.	1
7	610385	Washer, Terminal	1
8	610408	Nut, Terminal	1
9	29181	Screw & Washer, Breaker	1
10	610593	Screw, Condenser Fastening	1
11	29686	Tab, Ground Term.	1
13	30546	Coil Assembly	1
14	30554	Wire, Ignition Lead	1
15	30548	Condenser	1
16	30545	Core & Plate Group	1
17	30544	Stator Assy. (Incl. Nos. 2 thru 18)	1
18	30549	Felt, Cam Wiper	1

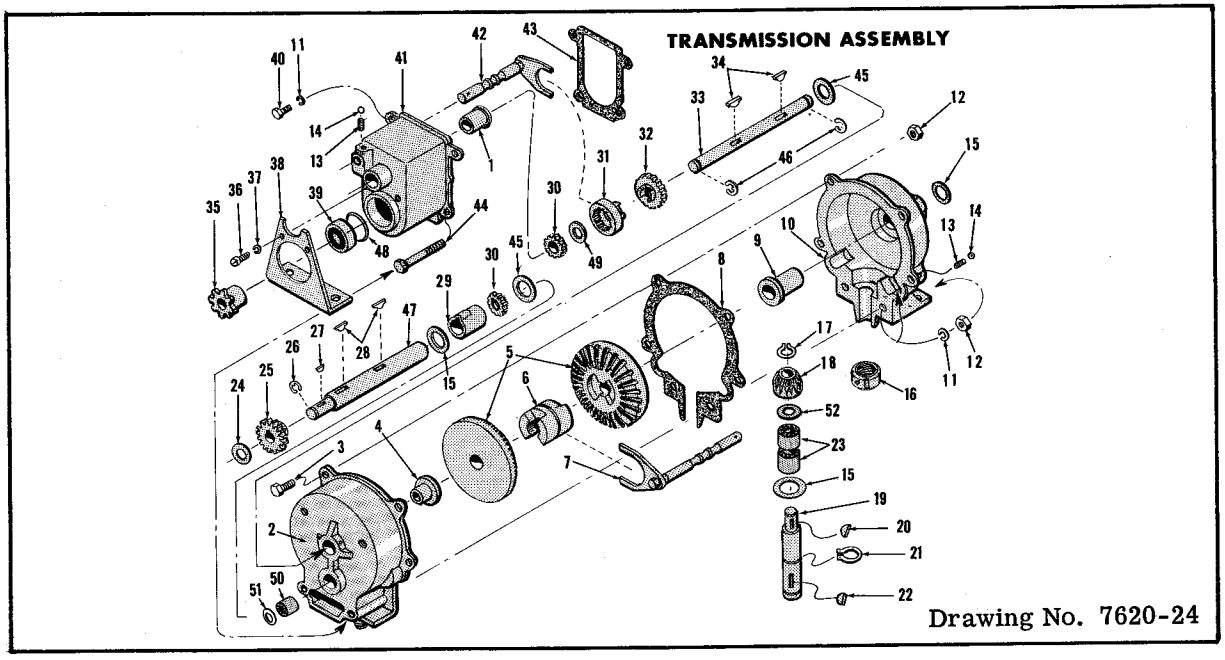

Ref. No.	Part No.	Description	No. Req.
1	2119-143	Bearing Flange	1
**2	2119-135	Hsg. Half - use with Models 22120, 22111 & 22112	1
***2A	2119-153	Hsg. Half - use with Models 22120, 22121	2
3	321-3	Screw	4
4	2119-144	Bearing Flange	1
5	2119-122	Bevel Gear	2
6	2119-123	Clutch Collar	1
7	2119-124	Detent Shaft Assy.	1
8	2119-132	Gasket	1
9	2119-127	Bearing Flange	1
**10	2119-120	Hsg. Half - use with Models 22110, 22111 & 22112	1
***10A	2119-153	Hsg. Half - use with Models 22120, 22121 & 22122	
12	3296-8	Nut	6
13	2119-130	Spring, Detent	2
14	255-1	Ball, Detent	2
15	2119-129	Washer	3
16	2119-133	Nut, Special	1
17	32120-80	Snap Ring	1
18	2119-121	Bevel Pinion	1
19	2119-156	Shaft, Input	1
20	3257-21	Woodruff Key #2	1
21	32120-79	Snap Ring	1
22	3257-5	Woodruff Key #9	1
23	252-60	Needle Bearing used with #2119-135 & #2119-120 Hsg. halves	2
23A	2119-152	Bearing Flange used with #2119-153 Hsg. half on Models 22120 22121 & 22122	2

Ref. No.	Part No.	Description	No. Req.
24	2119-131	Shim	1
25	2119-138	Gear, Output Shaft	1
26	32120-82	Snap Ring	1
27	3257-27	Woodruff Key #4	1
28	3257-24	Woodruff Key #5	2
29	2119-146	Spacer	1
30	2119-136	Gear	2
31	2119-139	Clutch Collar	1
32	2119-137	Gear, Int. Shaft	1
33	2119-140	Shaft, Int.	1
34	3257-23	#606 Hi-Pro Key	2
35	2119-125	Sprocket	1
36	3252-2	Screw	2
37	3253-17	Lockwasher	2
38	2119-145	Outboard Bracket	1
39	251-155	Ball Bearing, Serial No. 101-250	1
*	251-156	Ball Bearing, Serial No. 250 & up	1
40	321-2	Screw	2
41	2119-134	Housing	1
42	2119-142	Detent Shaft Assy.	1
43	2119-147	Gasket	1
44	321-14	Screw	2
45	2119-148	Spacer	2
46	32120-81	Snap Ring	2
47	2119-141	Shaft Output, Serial No. 101-250	1
*	2119-149	Shaft Output, Serial No. 250 & up	1
48	32120-83	Snap Ring	1
49	2119-150	Washer	2
50	252-50	Needle Bearing	1
51	2119-154	Thrust Washer	1
52	2119-155	Thrust Washer	1

* Not Illustrated
** Use #2119-128 Bearing Flange (Ref. #23)
*** Use #2119-152 Bearing Flange (Ref. #23A)

PRINTED IN U.S.A.