TORO

INSTRUCTIONS FOR ATTACHING DRAG BAR FURROW KIT

MODEL NO. 86009 FOR TILLER IMPLEMENT

FIG. 1 TO ATTACH DRAG BAR

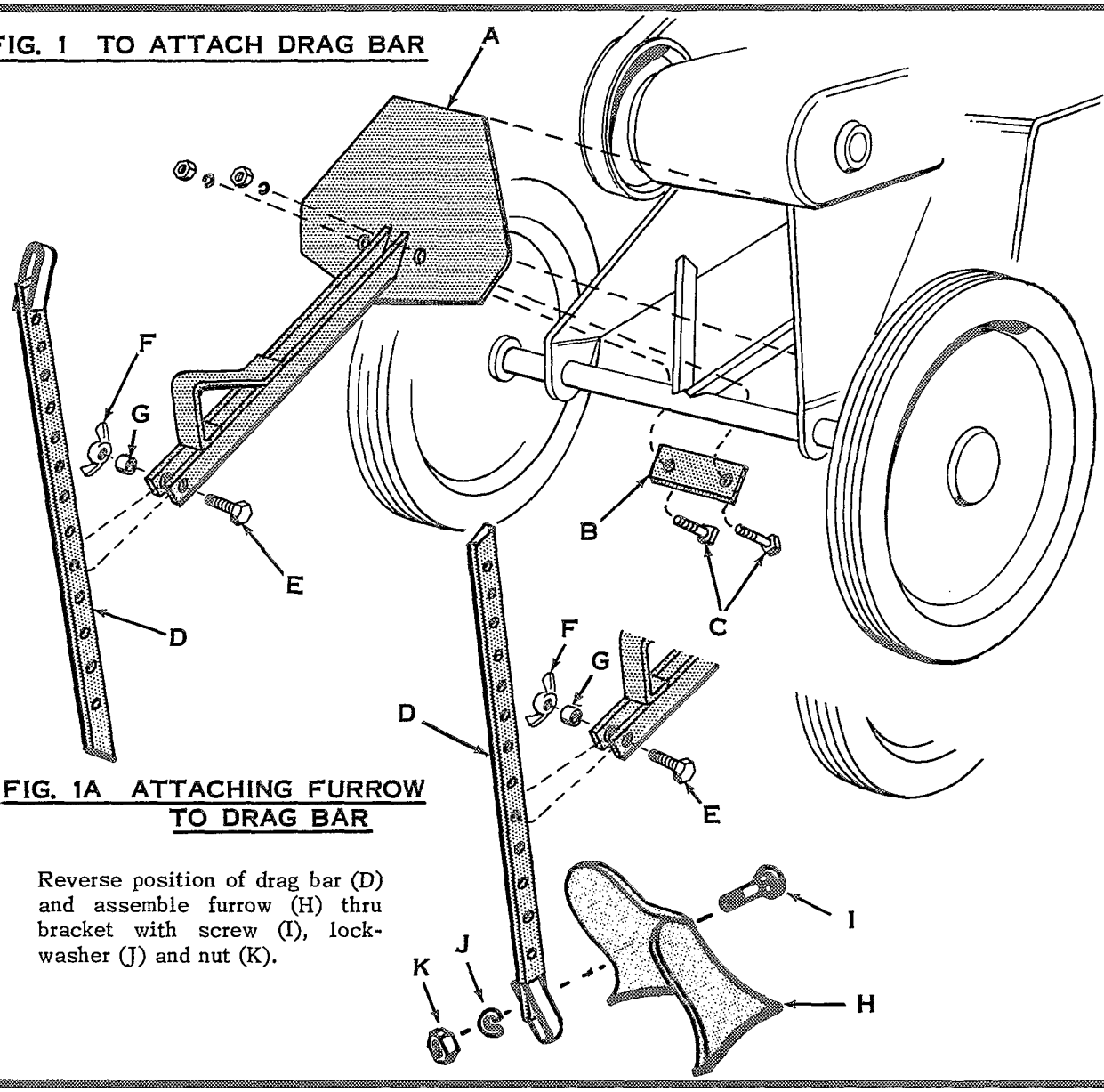

FIG. 1A ATTACHING FURROW TO DRAG BAR

Reverse position of drag bar (D) and assemble furrow (H) thru bracket with screw (I), lockwasher (J) and nut (K).

Attach drag bar mounting plate (A) against axle braces as shown in Fig. 1. Then place backing plate (B) on under side of braces and secure by placing screws (C) through plate (B) and drag bar (A) locking with lockwashers and nuts.

Position drag bar (D) in place as shown in Fig. 1 and secure by placing screw (E) through mounting plate and bushing (G) and tightening wing nut (F).

The drag bar assembly was designed for better control and deeper penetration in hard sod or rough ground. Drag bar is adjustable and deeper penetration can be obtained by placing bar in a higher hole position.

To assist in turning at the end of a row, first disengage clutch, then pull tiller implement backward slightly. This will cause drag bar (D) to partially raise out of the ground. Press down on extended end of bar with your foot to position it in channel on mounting plate.

After making your turn, lift drag (D) with toe into digging position as clutch is engaged.

(over)

Printed in U.S.A.

TORO

INSTRUCTIONS FOR ATTACHING GAUGE WHEEL ASSEMBLY

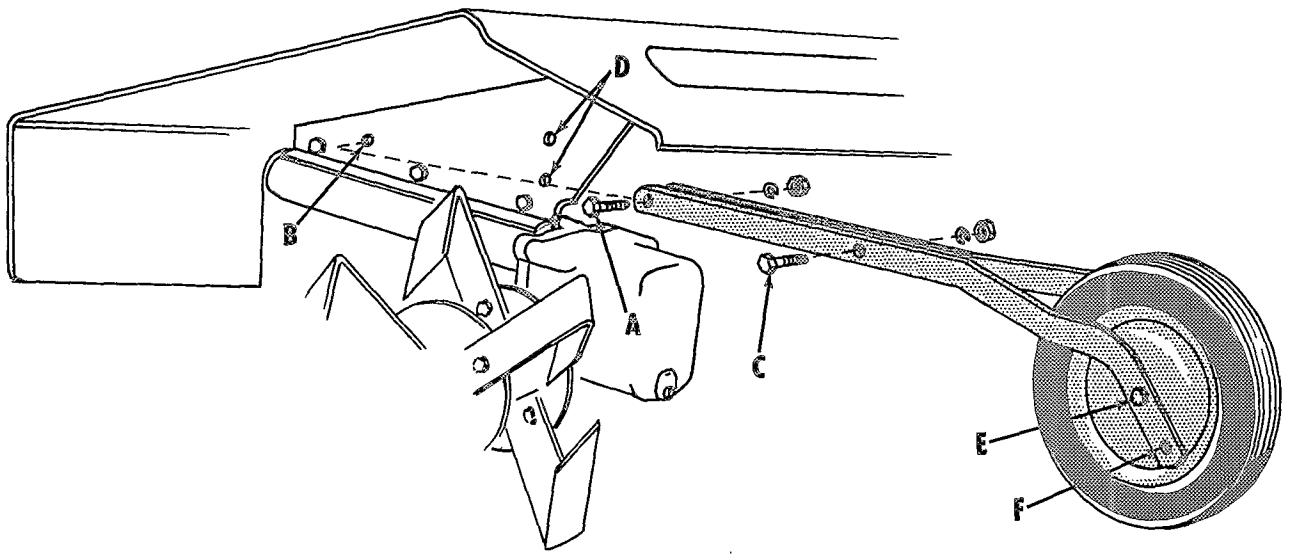

GAUGE WHEEL ASSEMBLY FIG. 2

Place gauge wheel assembly in position as shown in Fig. 2. Fasten screw (A) at pivot point (B) and screw (C) at point (D). Maximum depth can be obtained by placing wheel screw in position (E) and in top hole (D). Shallow depth is obtained by placing wheel screw (E) at (F) and bottom hole (D).

The gauge wheel assembly is best suited for use in loose or sandy soil, to better control depth penetration of the tiller implement.