Form No. 3371-849 Rev A

TORO®

Count on it.

Parts Catalog

22in Recycler® Lawn Mower

Model No. 20333C—Serial No. 312000001 and Up

Ordering Replacement Parts

To order replacement parts, please supply the part number, the quantity, and the description of each part desired.

Understanding Reference Numbers

Each identified part in an illustration has a reference number. The reference number for a part also appears in the parts list, along with other information about the part.

This catalog uses two special reference number formats, one to indicate parts in a service assembly and another to indicate the quantity of a given part in an illustration.

Service Assembly Reference Numbers

Parts in service assemblies have reference numbers in the form a:b. The a represents the reference number of the entire service assembly and the b represents a sequential number unique to each part within the service assembly.

For example, a wheel assembly might be identified by reference number 6, the tire by 6:1, the valve by 6:2, and the wheel by 6:3. When you order the assembly identified by reference number 6, you receive all parts identified by reference numbers 6:1,6:2, and 6:3. However, you may also order any part individually. Reference numbers of this type appear in illustration and in parts lists.

Reference Numbers Indicating Quantity

In an illustration, if a reference number indicates more than one part, the reference number has the form nX y. The n represents the quantity of the part, the X is the multiplication symbol, and the y represents the reference number.

For example, in an illustration, the reference number 2X 37 means that two of the parts identified by reference number 37 are indicated.

List of Abbreviations

AR: as required

ASM: assembly

BBC: blade brake control

BHTF: button head thread forming

CARR: carriage

CCW: counter clockwise

CW: clockwise

DEG: degrees

DPA: Dual Point Adjustment

ECM: electronic control module

EXT: external

FH: flat head

GA: gauge

HD: heavy-duty

HF: hex flange

HH: hex head

HHF: hex head flange

HHFTF: hex head flange thread forming

HJ: hex jam

HLH: hex lag head

HOC: height-of-cut

HSBH: hex socket button head

HSFH: hex socket flat head

HSH: hex socket head

HWH: hex washer head

HWHTF: hex washer head thread forming

HYD: hydraulic

LH: left hand

LP: Liquid Propane

NI: nylon insert

NPTF: national pipe thread fine

PFH: phillips flat head

PPH: phillips pan head

PPHTF: phillips pan head thread forming

PRH: phillips round head

PTH: phillips truss head

PTO: power-take-off

RH: right hand

ROPS: roll-over protection system

RRB: rear roller brush

SFH: slotted fillister head

SHH: slotted hex head

SHWH: slotted hex washer head

SPH: slotted pan head

SQH: square head

SRH: slotted round head

STD: standard

TAP: self tapping

TTH: torx truss head

Contents

Deck, Side Chute and Rear Door Assembly 4
Rear Bag Assembly 5
Engine and Blade Assembly 6
Front Wheel and Height-of-Cut Assembly 7
Transmission and Rear Wheel Drive Assembly 8
Upper Handle Assembly 9
Upper Handle Component Assembly 10
Attachments and Accessories 11

© 2011—The Toro® Company
8111 Lyndale Avenue South
Bloomington, MN 55420

Contact us at www.Toro.com.
Printed in the USA.
All Rights Reserved

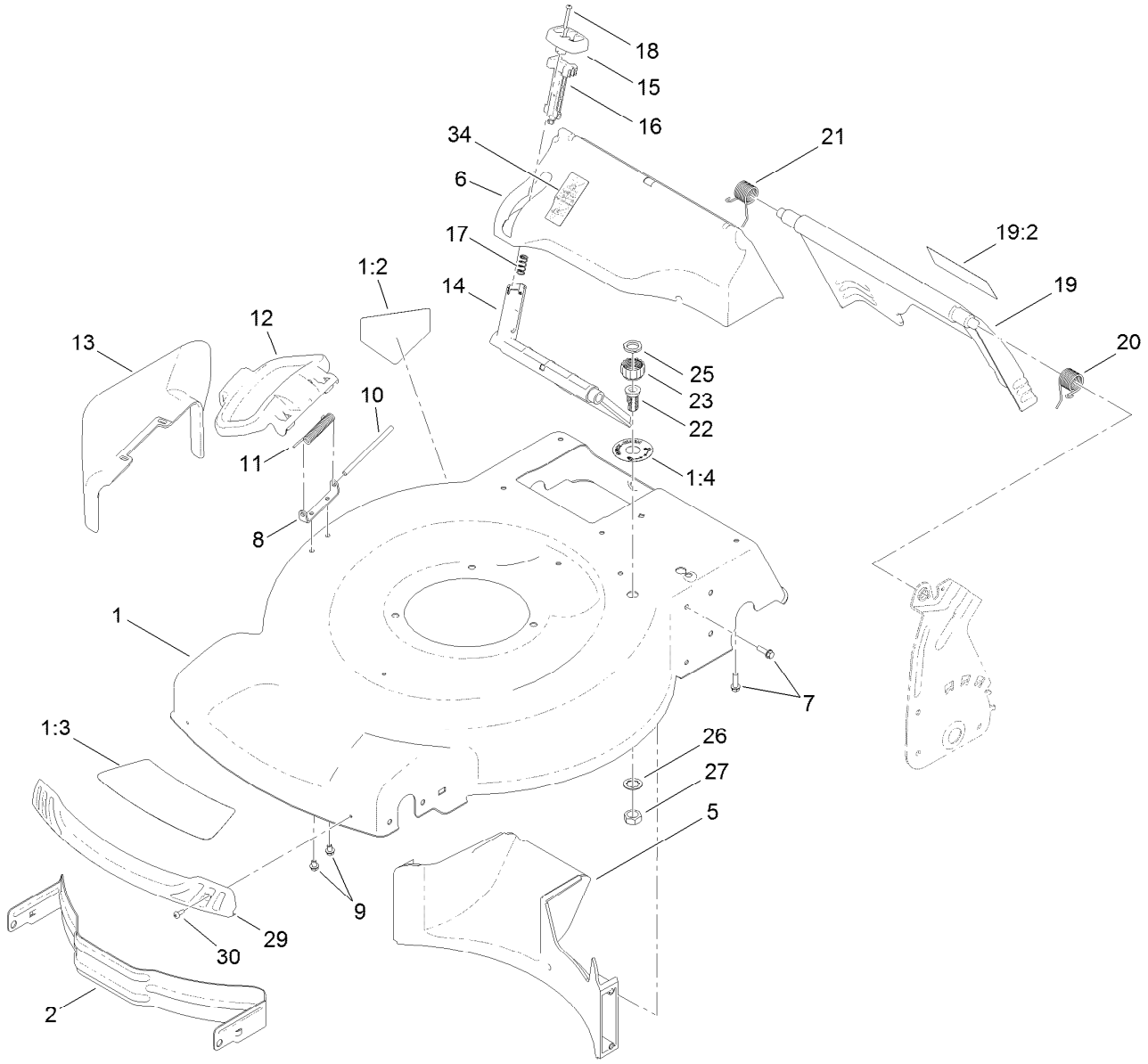

Deck, Side Chute and Rear Door Assembly

Ref.	Part Number	Qty.	Description
1	117-1084	1	Housing ASM
1:2	94-8072	1	Decal-Danger
1:3	115-4676	1	Decal-Recycler
1:4	112-8867	1	Decal-Port, Washout
2	114-7963-01	1	Baffle-Front
5	114-7961	1	Baffle-Rear
6	115-4677	1	Chute-Recycle
7	46-8091	9	Screw-HWH
8	112-6416	1	Bracket-Cover
9	99-8445	2	Screw-HWH, Taptite
10	99-5291	1	Rod-Cover
11	99-5293	1	Spring-Torsion
12	115-8449	1	Deflector-Side
13	115-8447	1	Chute-Discharge, Side
14	114-7960	1	Deflector-Recycle
15	114-7958	1	Knob-Recycle

Ref.	Part Number	Qty.	Description
16	114-7959	1	Latch-Recycle
17	117-1031	1	Spring-Compression
18	32104-120	2	Screw-PPH
19	121-5776	1	Rear Door ASM
19:2	114-7982	1	Decal-Warning
20	115-2859	1	Spring-Torsion
21	114-7924	1	Spring-Torsion
22	112-6400	1	Port-Washout
23	112-6401	1	Coupling-Hose, Washout Port
25	112-6438	1	Washer-Seal, Washout Port
26	3254-5	1	Washer-Tooth, Internal
27	3218-6	1	Nut-Jam
29	114-7987	1	Bumper
30	105-6849	2	Screw-Thread Forming
34	119-0305	1	Decal-Bag On Demand

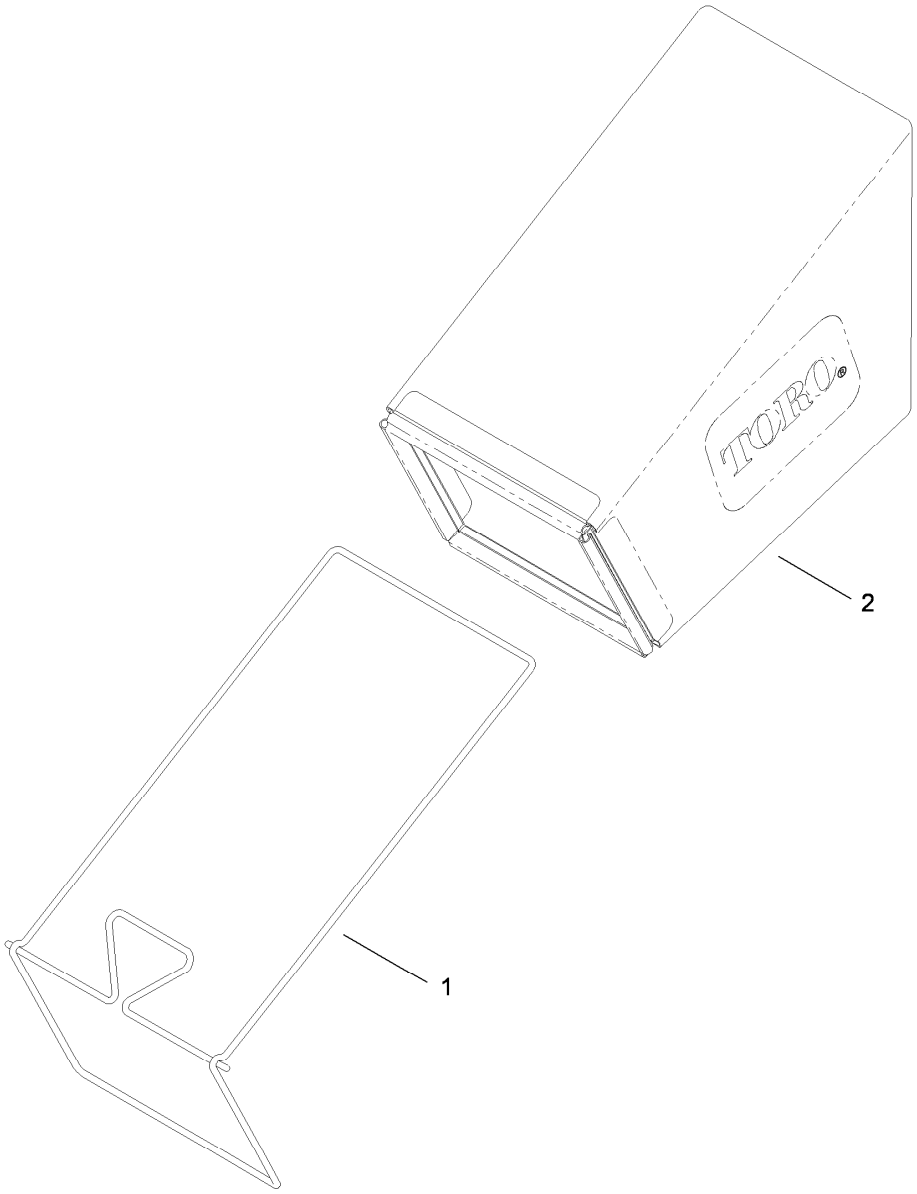

Rear Bag Assembly

Ref.	*Part Number*	*Qty.*	*Description*
1	114-2679-03	1	Frame-Bag
2	115-4673	1	Grass Bag ASM

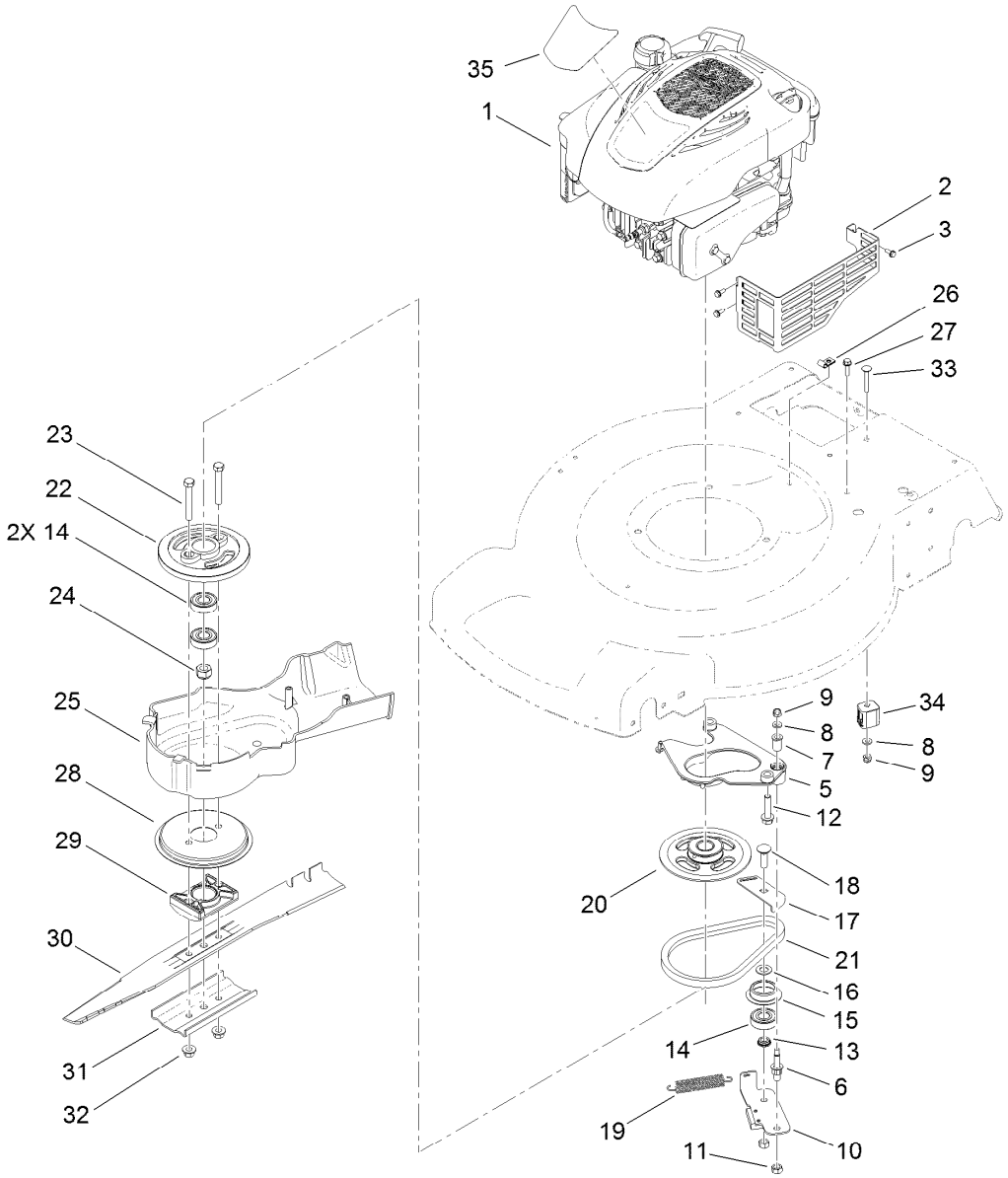

Engine and Blade Assembly

Ref.	Part Number	Qty.	Description
1		1	Engine-Briggs, 128M02-0119-F1 ●■
2	104-7577-03	1	Shield-Muffler
3	32144-1	3	Screw-Taptite
5	108-9341	1	Plate-Anchor
6	107-0759	1	Bolt-Shoulder
7	107-0797	1	Bushing
8	3256-16	2	Washer-Flat
9	3296-73	2	Nut-Lock, NI
10	120-3327	1	Brake Arm ASM
11	603773	2	Nut
12	32144-102	3	Screw-HWH
13	107-0758	1	Spacer-Bearing
14	100-1048	3	Bearing-Ball
15	108-3790	1	Retainer-Belt
16	605256	1	Washer-Plain
17	107-7471	1	Plate-Guide
18	3231-25	1	Screw-CARR

Ref.	Part Number	Qty.	Description
19	108-3792	1	Spring-Tension, Brake
20	117-5970	1	Pulley-BBC
21	110-1790	1	Belt-BBC
22	107-0754	1	Drum
23	3211-42	2	Screw-HH
24	108-9342	1	Nut-Hex
25	115-2892	1	Cover-BBC
26	2412-72	1	Clip-Closed, Insulated
27	46-8091	2	Screw-HWH
28	108-3787	1	Disc
29	107-7487	1	Support-Blade
30	108-9764-03	1	Blade-22 Inch
31	108-3766-03	1	Support-Blade
32	54-9190	2	Nut-Lock
33	3229-5	1	Screw-CARR
34	106-6801	1	Anchor-Cable, BBC
35	121-2371	1	Decal-Shroud

● Not serviced separately

■ Obtain parts from www.briggsandstratton.com

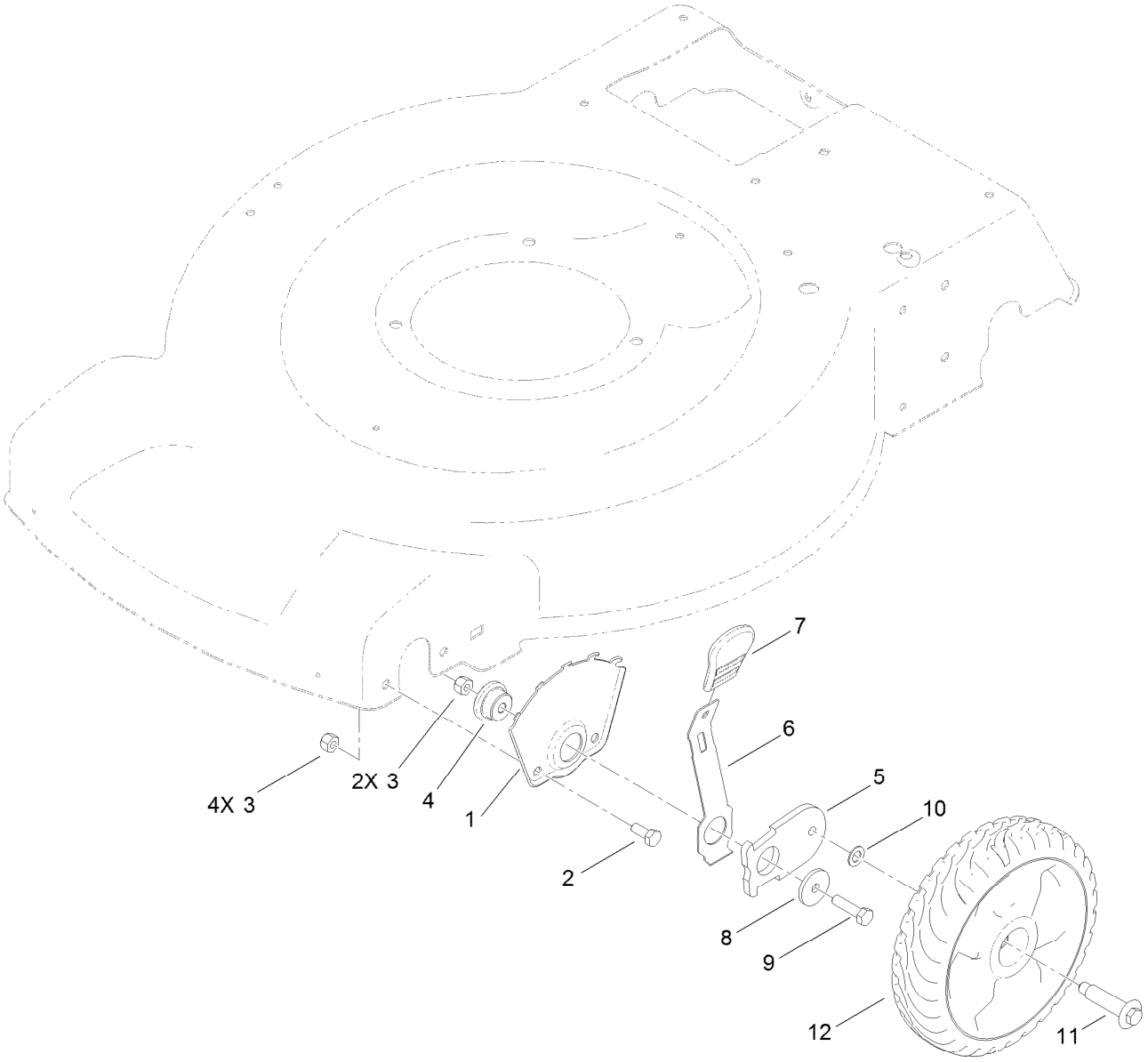

Front Wheel and Height-of-Cut Assembly

Ref.	*Part Number*	*Qty.*	*Description*
1	115-1956-03	2	Plate-HOC, Front
2	322-3	4	Screw-HH
3	3296-29	6	Nut-Lock, NI
4	105-1818	2	Bushing-Mount, HOC
5	105-1807	2	Arm-Pivot, Front
6	105-1809	2	Arm-Spring
7	110-0549	2	Knob-HOC
8	105-3048	2	Washer-Flat
9	322-6	2	Screw-HH
10	40-1940	2	Washer
11	614650	2	Bolt-Shoulder
12	115-2894	2	8 Inch Wheel ASM

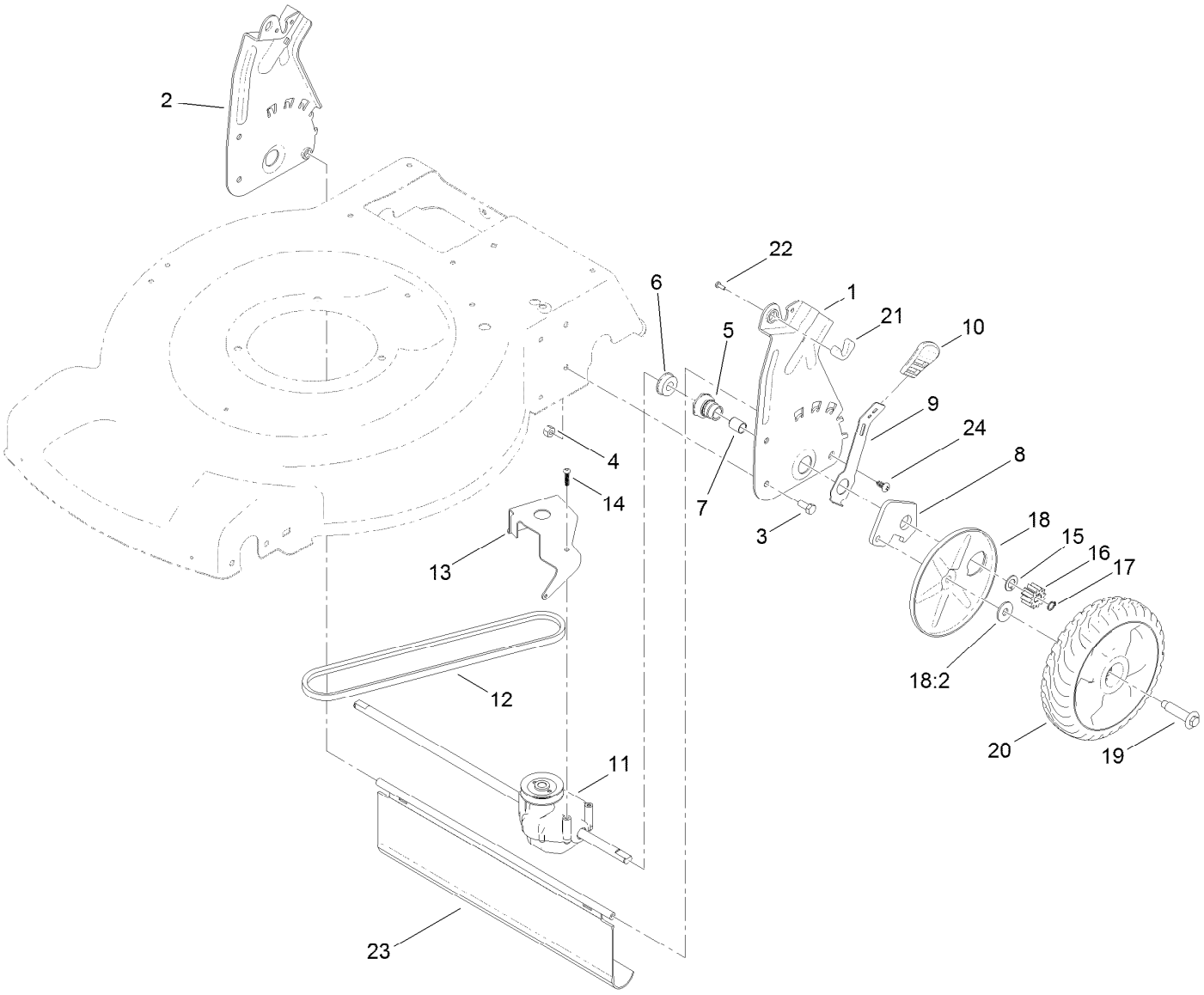

Transmission and Rear Wheel Drive Assembly

Ref.	*Part Number*	*Qty.*	*Description*
1	114-7955-03	1	Plate-Rear, LH (HOC)
2	114-7956-03	1	Plate-Rear, RH (HOC)
3	322-3	4	Screw-HH
4	3296-29	4	Nut-Lock, NI
5	108-9779	2	Retainer-Bushing, HOC
6	104-8699	2	Bearing-Ball
7	108-9782	2	Bushing-Sleeve
8	108-9781	2	Arm-Pivot, Rear
9	108-9780	2	Arm-Spring
10	110-0549	2	Knob-HOC
11	115-4652	1	Transmission
12	115-4669	1	Belt-V
13	114-7977-03	1	Bracket-Transmission

Ref.	*Part Number*	*Qty.*	*Description*
14	108-7476	3	Screw-Plastite
15	110-7191	2	Washer-Thrust
16	115-4668	2	Gear-Pinion, 12T
17	32151-61	2	Ring-Retaining
18	110-1792	2	Wheel Cover ASM
18:2	614426	1	Washer-Stepped
19	614650	2	Bolt-Shoulder
20	115-4695	2	8 Inch Wheel Gear ASM
21	115-8406	2	Anchor-Bag
22	105-9437	2	Screw-PPH
23	115-2893	1	Shield-Trailing
24	117-1092	2	Screw-PTH

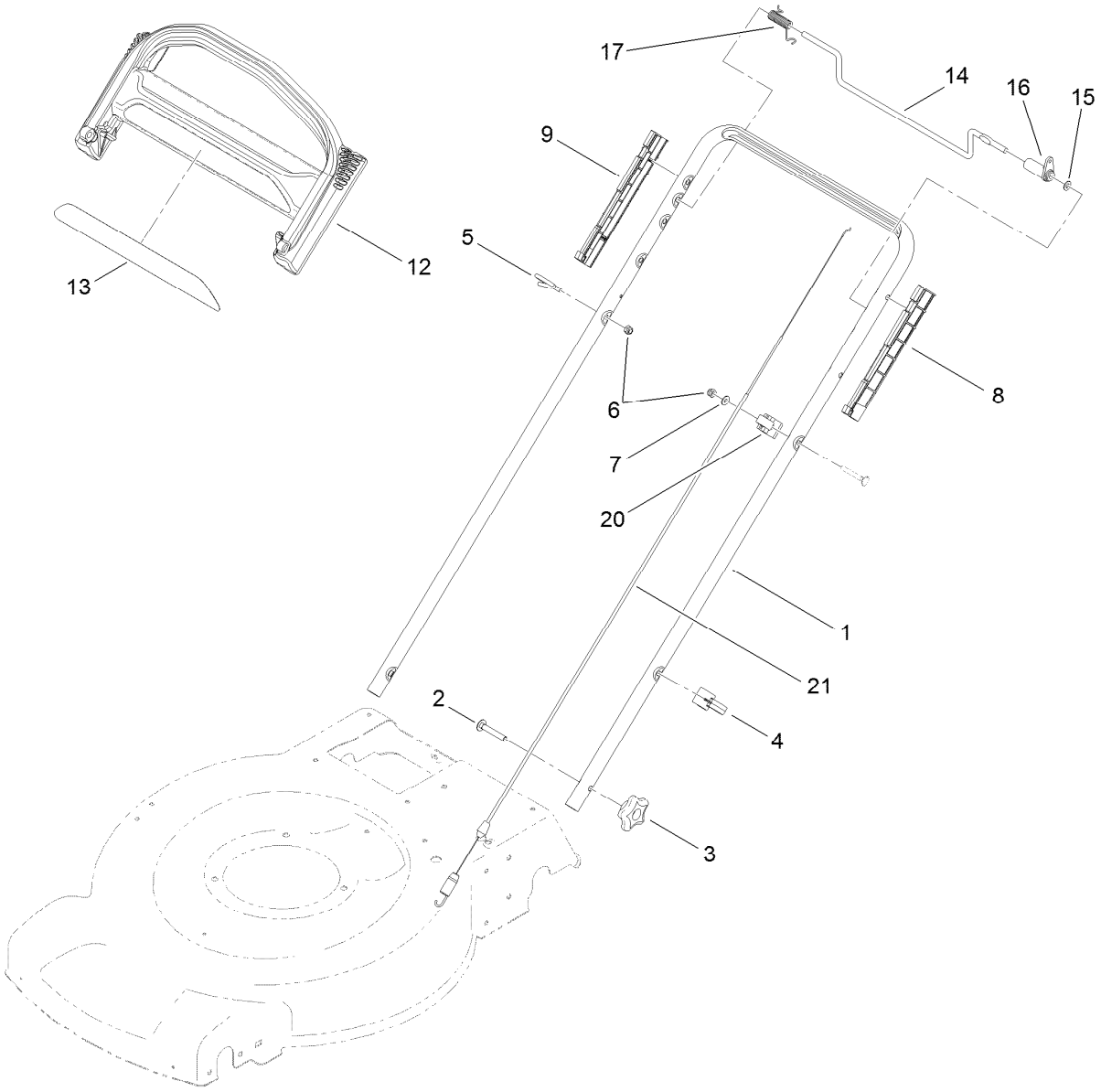

Upper Handle Assembly

Ref.	Part Number	Qty.	Description
1	119-3810-05	1	Handle
2	3230-6	2	Screw-CARR
3	117-5976	2	Knob-Handle, Locking
4	114-7988	1	Guide-Cable
5	86-9671	1	Guide-Rope
6	3296-73	2	Nut-Lock, NI
7	3256-1	1	Washer-Flat
8	105-6842	1	Guide-LH
9	105-6841	1	Guide-RH

Ref.	Part Number	Qty.	Description
12	104-8678	1	Handle-Control
13	117-1019	1	Decal
14	99-1588	1	Bar-Control, Traction
15	3256-23	1	Washer-Flat
16	99-1589	1	Lever-Traction
17	104-8690	1	Spring-Torsion
20	99-5239	1	Anchor-Cable
21	115-8435	1	Cable-Traction

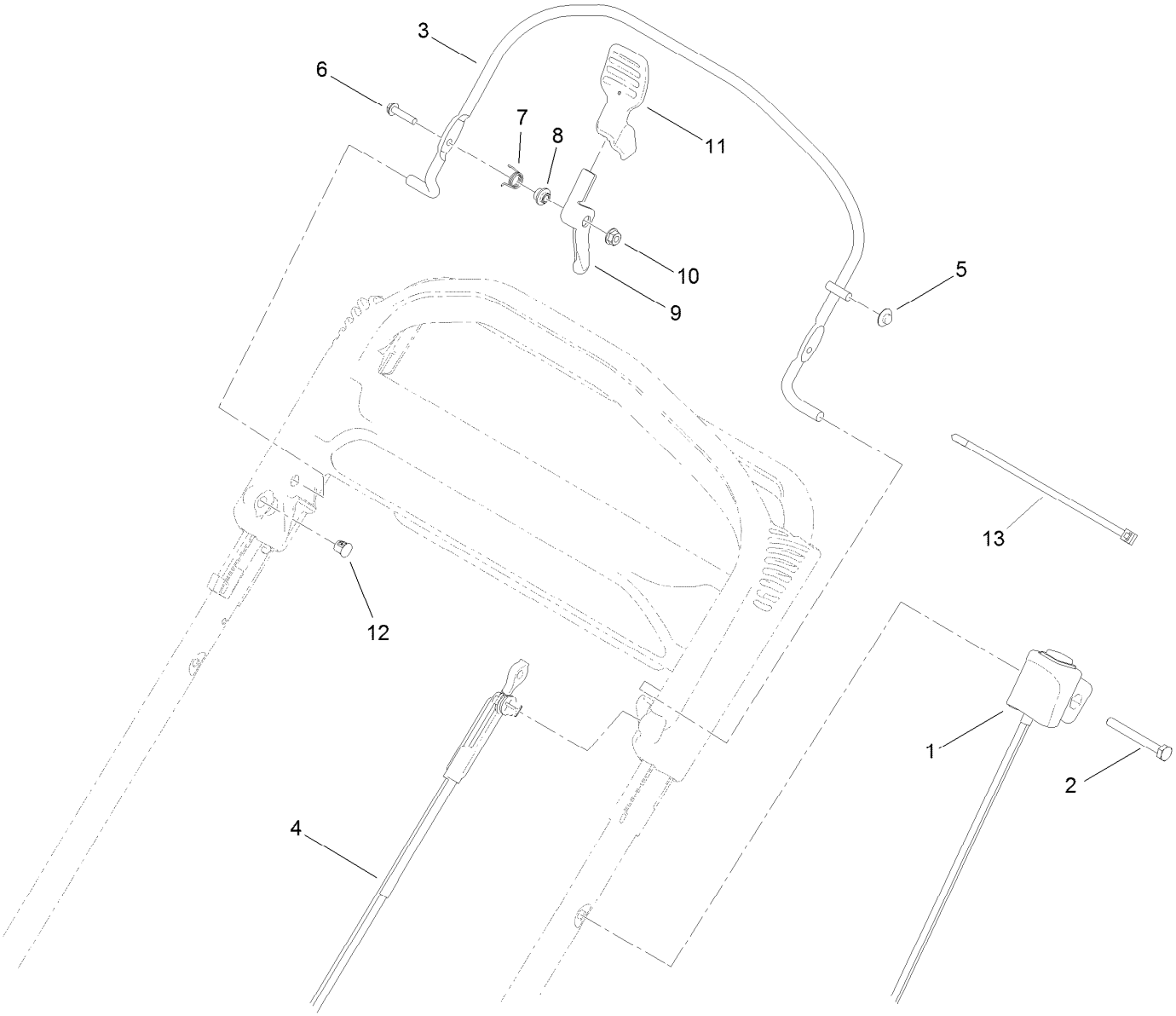

Upper Handle Component Assembly

Ref.	*Part Number*	*Qty.*	*Description*
1	117-5975	1	Switch Housing ASM
2	321-50	1	Screw-HH
3	108-3788-03	1	Bail-Brake
4	115-8439	1	Cable-Brake, BBC
5	3290-337	1	Nut-Speed
6	106-9169	1	Screw-HWH
7	107-7462	1	Spring-Torsion
8	107-7463	1	Spacer
9	106-6802	1	Lever
10	32128-17	1	Nut-Lock, Flange
11	112-8884	1	Knob-BBC
12	104-9368	1	Plug-Dome
13	614249	2	Tie-Cable

Attachments and Accessories

For 20333C 22in Recycler Lawn Mower

Product Name	Model/Part
Traction Assist Handle Kit	108-8120
Loose Parts Kit	117-4132
Replacement Bag	59310
Replacement Frame and Bag Kit	59312
22in Blade Kit	59534



Count on it.