FORM NO. 3319–168

TORO®

MODEL NO. 04490–70001 & UP

INSTALLATION INSTRUCTIONS

GROOMER KIT
FOR GREENSMASTER® 3200 CUTTING UNITS

LOOSE PARTS CHART

Note: Use this chart as a checklist to assure all parts necessary for assembly have been received. Without these parts, total set-up cannot be completed. Quantities listed are for one cutting unit.

Tapered Screw	2	Use to mount reel bearing housing
Drive Coupler Snap Ring	1 1	Mount into reel shaft
Plug	1	Replace grease fitting in reel bearing housing
Plastic Shim Pivot Plate Pivot Plate Adapter Tapered Socket Head Screws	1 1 1 2	Mount to reel bearing housing
Front Roller Bracket – R.H. Front Roller Bracket – L.H. Flat Washer	1 1 2	Mount to cutting unit side plates
Adjustment Rod External Tooth Lockwasher Locknut	2 2 2	Mount to each front roller bracket
Groomer Reel Spacer Key Driven Pulley Nut M10	1 1 1 1 1	Mount groomer reel to pivot plate
Bearing Housing Pivot Spacer Flange Head Screw–M16 x 70mm Locknut–M10 Cap Plug w/Grease Fitting	1 1 1 1 1	Mount groomer reel to bearing housing
Pivot Bracket (Black Plated) Special Washer Flat Washer Wave Washer Hardened Washer Locknut	1 2 2 1 1 2	Mount pivot bracket to right side of cutting unit
Pivot Bracket (Yellow Plated) Special Washer Flat Washer Wave Washer Hardened Washer Locknut	1 2 2 1 1 2	Mount pivot bracket to left side of cutting unit
Drive Pulley Assembly Drive Belt Driver Cover Housing Socket Head Screw–M6 x 20mm Locknut–M8 Spacer Flatwasher Special Screw w/Grease Fitting	1 1 1 2 1 1 1 1	Mount drive cover housing
Operators Manual Parts Catalog Registration Card	2 1 1	Read before operating machine Fill out and send to the Toro Co

Specifications and design subject to change without notice.

© The TORO Company – 1997

SET–UP INSTRUCTIONS

⚠ CAUTION

Before servicing or making adjustments to the machine, stop engine and remove key from the switch.

1. Disconnect and remove cutting units from traction unit and position on a level work surface.

2. Remove front roller and roller brackets from cutting unit (Fig.1). Retain mounting hardware.

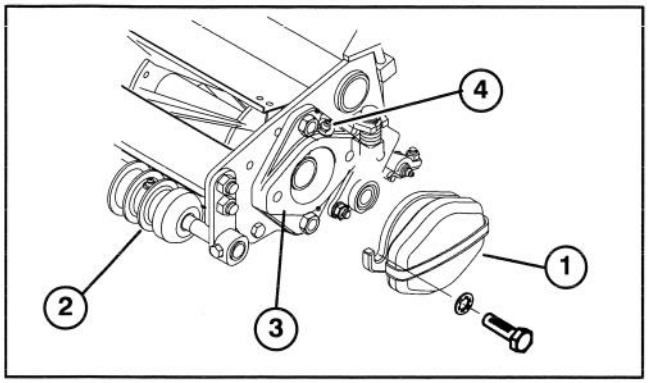

Figure 1

1. **Counter weight**
2. **Front roller**
3. **Reel bearing housing**
4. **Grease fitting**

Note: If mounting Groomer Kit on a cutting unit with a serial number prior to one of those listed below, a new shoulder bolt, eccentric bolt and nuts must be purchased before roller can be re–installed with kit.

Model No. 04480	Serial No. 60656
Model No. 04481	Serial No. 60648
Model No. 04482	Serial No. 60697
Model No. 04483	Serial No. 60985

Order the following parts from your local authorized Toro Distributor.

(1) Shoulder Bolt	Toro Part No. 95–1618
(1) Eccentric Bolt	Toro part No. 95–1617
(2) Lock Nuts	Toro Part No. 33024–00

3. Remove front roller from roller brackets (Fig. 1). Retain mounting set screws.

4. Remove cutting unit counterweight.

5. Remove (2) screws securing reel bearing housing to motor end of cutting unit. If screw heads are thick, replace with tapered thin head screws, included in kit.

6. Install screws from outside as shown in figure 2. Secure with tapered nuts previously removed.

Note: Only replace screws on counterweight end of cutting unit.

Note: The following instructions are for installing kit on a cutting unit with reel motor on right side. Unless specified, reverse procedure for cutting units with motor on left side.

7. Install drive coupler and snap ring into reel shaft (Fig. 2).

8. Remove grease fitting (Fig.1) from reel bearing housing and replace with plug (Fig. 2).

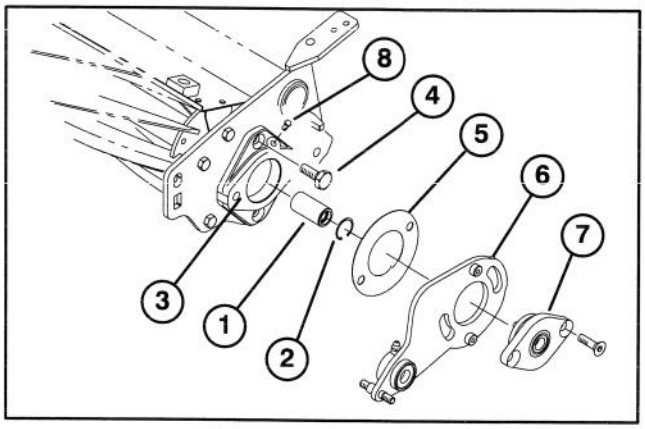

Figure 2

1. **Drive coupler**
2. **Snap ring**
3. **Reel bearing housing**
4. **Tapered screw**
5. **Plastic shim**
6. **Pivot plate**
7. **Pivot plate adapter**
8. **Plug**

9. Mount plastic shim, pivot plate and pivot plate adapter to reel bearing housing with (2) tapered socket head screws. Tighten screws firmly, but pivot plate must rotate freely.

10. Loosely mount front roller and new R.H. & L.H. roller bracket assemblies to cutting unit side plates with mounting hardware previously removed or new hardware and (2) new flat washers (included in kit). Position as shown in figure 3.

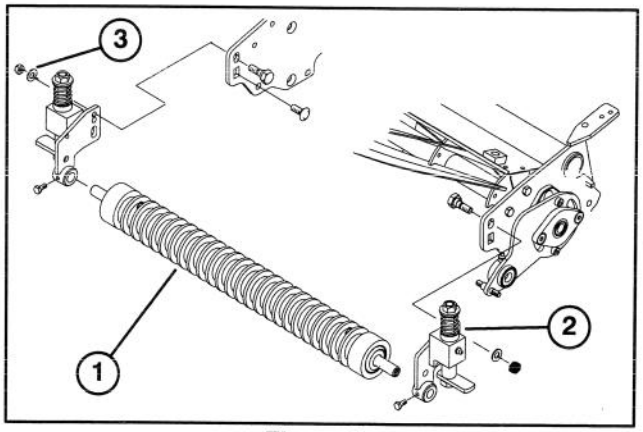

Figure 3

1. **Front roller**
2. **L.H. Roller bracket**
3. **Washer**

11. Loosely mount an adjustment rod to inside of each roller bracket with a external tooth lockwasher and locknut (Fig. 4). Lockwasher to be positioned to the inside of roller bracket.

SET–UP INSTRUCTIONS

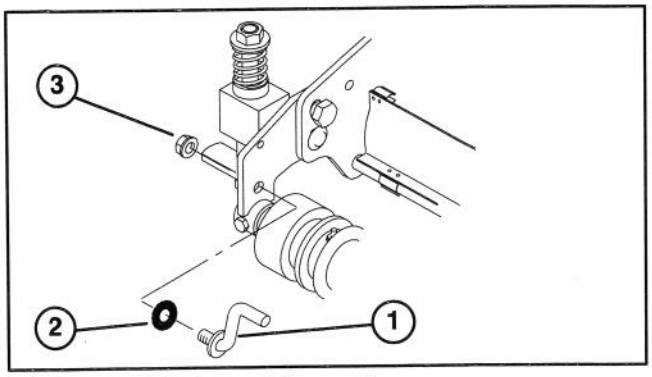

Figure 4
1. Adjustment rod
2. External tooth lockwasher
3. Locknut

12. Insert keyed end of groomer reel through pivot plate (Fig. 5).

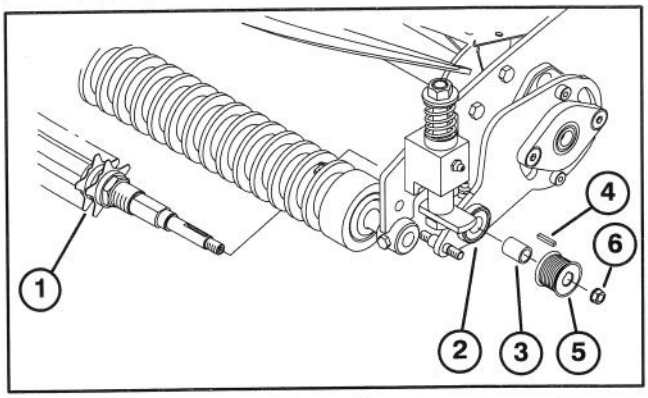

Figure 5
1. Groomer reel
2. Pivot plate
3. Spacer
4. Key
5. Driven pulley
6. Nut

13. Slide spacer (Fig. 5) onto keyed shaft end.

14. Install key (Fig. 5) into shaft keyway and slide driven pulley onto shaft. Secure assembly with M10 nut.

15. On right side of cutting unit, remove flange head capscrew securing shield rod to side plate (Fig. 6).

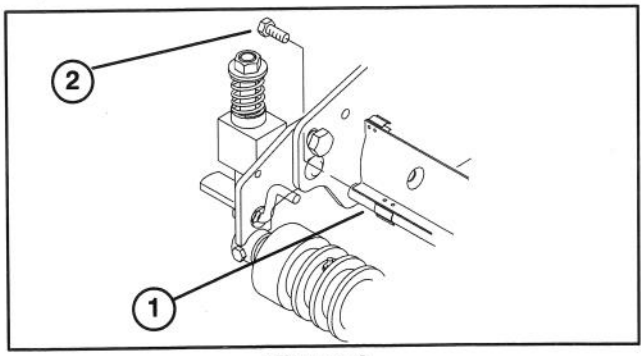

Figure 6
1. Shield rod
2. Flange head capscrew

16. Insert bearing housing onto right end of groomer reel shaft as shown in figure 7.

17. Insert pivot spacer through bushings on bearing housing (Fig. 7).

18. Insert M16 x 70mm flange head capscrew thru pivot spacer and secure to cutting unit side plate and shield rod (Fig. 7).

19. Secure groomer shaft to bearing housing with a M10 locknut (Fig. 7).

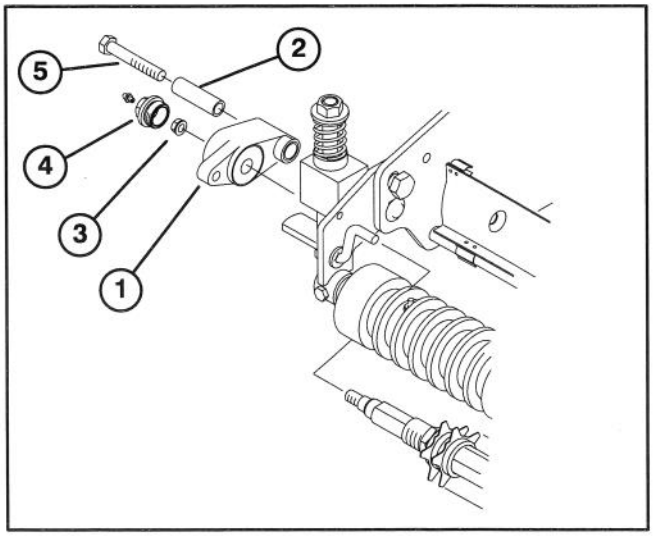

Figure 7
1. Bearing housing
2. Pivot spacer
3. Locknut
4. Cap plug w/grease fitting
5. Capscrew

20. Install cap plug w/grease fitting into hole in bearing housing (Fig. 7).

21. On right side of both L.H. and R.H. groomer drive cutting units, mount the black plated pivot bracket to either the bearing hub stud or the pivot plate stud with a special washer, wave washer, special washer, flat washer and locknut positioning as shown in figure 8.

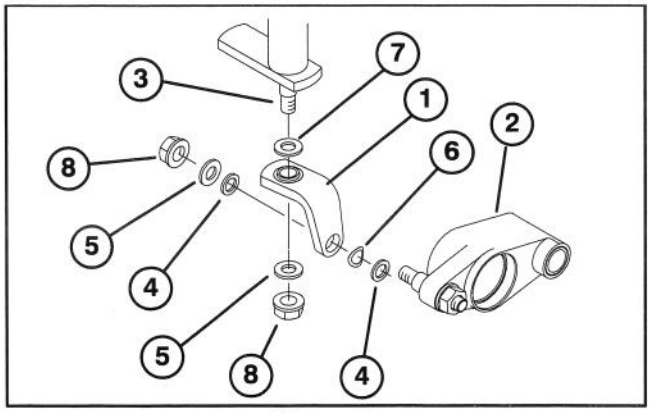

Figure 8
1. Pivot bracket (Black plated)
2. Bearing hub
3. Adjusting bolt
4. Special washer
5. Flat washer
6. Wave washer
7. Hardened washer
8. Locknut

SET–UP INSTRUCTIONS

22. Repeat step 21 on left side of cutting unit using yellow plated pivot bracket (Fig. 9).

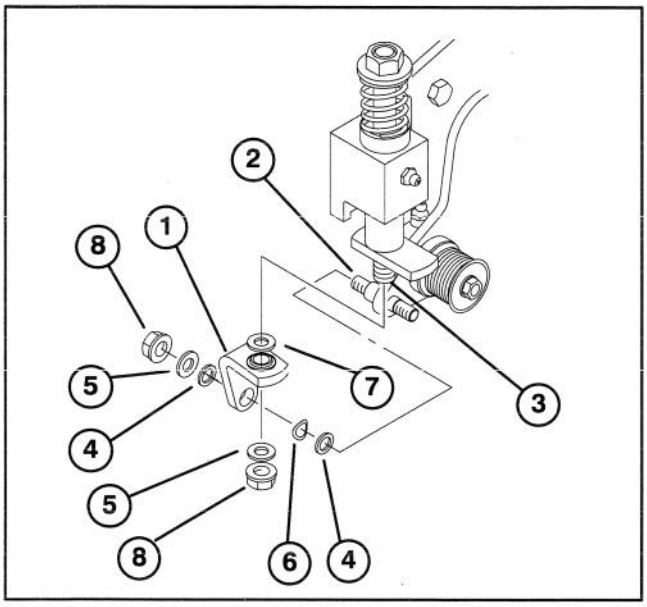

Figure 9

1. **Pivot bracket (Yellow plated)**
2. **Pivot plate stud**
3. **Adjusting bolt**
4. **Special washer**
5. **Flat washer**
6. **Wave washer**
7. **Hardened washer**
8. **Locknut**

23. Insert a hardened washer onto each adjusting bolt in front roller bracket assemblies (Fig. 8 & 9).

24. Pivot groomer reel assembly upward until pivot brackets slide onto each adjusting bolts (Fig. 8 & 9).

25. Secure each pivot bracket to adjusting bolt with flat washer and locknut (Fig. 8 & 9).

26. Insert splined end of drive pulley shaft through adapter plate into drive coupling (Fig. 10).

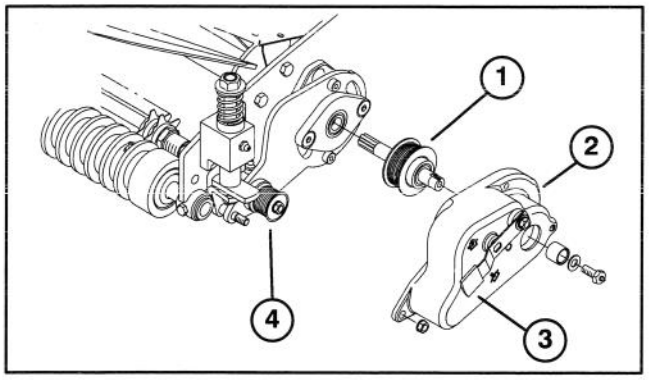

Figure 10

1. **Drive pulley**
2. **Drive cover housing**
3. **Idler control lever**
4. **Pivot plate stud**

27. Install groomer drive belt onto drive and driven pulleys.

28. Lift and rotate idler control lever onto pin (disengaged position) on drive cover housing.

29. Position drive cover housing over drive pulley shaft, pulleys and onto pivot plate stud (Fig. 10).

Note: Make sure back side of belt is against idler pulley in drive cover housing.

30. Secure drive cover housing to pivot plate with (2) M6 x 20mm socket head screws (Fig. 10). Also, secure housing to pivot plate stud with a M8 locknut.

31. Insert a spacer onto drive shaft and secure with a flat washer and special screw/grease fitting (Fig. 10).

32. Grease (5) groomer fittings.

33. Install Pull Link Kit, Toro Part No. 94–9630 per instructions supplied with kit but do not use center extension in kit (Fig. 11). Adjust pull link to shortest length.

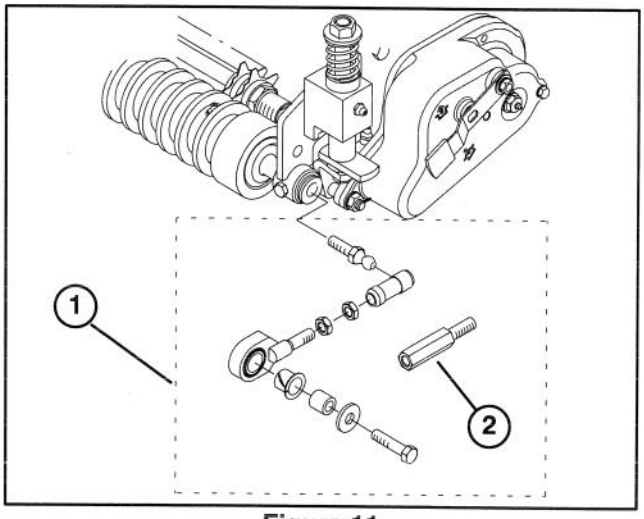

Figure 11

1. **Pull link kit**
2. **Center extension (not used)**

OPERATING INSTRUCTIONS

INTRODUCTION

Grooming is performed above the soil level. Grooming promotes vertical growth of the grass by cutting runners (stolons), removing thatch and encouraging denser growth and deeper rooting. This can, in effect, yield a more even grass with less "grain" for faster and truer action of the golf ball.

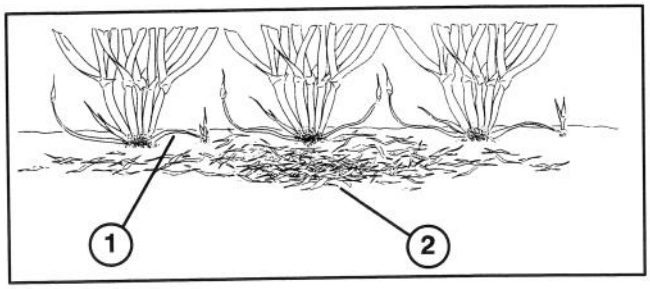

Figure 12
1. **Grass runners**
2. **Thatch**

Grooming is similar to verti–cutting in its runner cutting action. Grooming blades however, should never penetrate the soil like verti–cutting or dethatching. Groomer blades are spaced closer together and are used more often than verti–cutters so that they are more effective in cutting runners and removing thatch. Verti–cutters are used primarily for greens renovation while groomers are used for ongoing greens upkeep.

It is difficult to make precise recommendations on use of grooming reels because so many variables affect the performance of grooming including:

A. The time of the year (i.e., the growing season) and weather pattern.

B. The general condition of each green.

C. The frequency of grooming/cutting–both how many cutting per week and how many passes per cutting.

D. The height of cut setting on the main reel.

E. The height/depth setting on the grooming reel.

F. How long the grooming reel has been in use on this green.

G. Type of grass on the green.

H. The overall greens management program (i.e. irrigation, fertilizing, spraying, coring, over seeding, etc.).

I. Traffic

J. Stress periods (i.e., high temperatures, high humidity, unusually high traffic).

These factors can vary from golf course to golf course and from green to green. It is important, therefore, to inspect the greens frequently and vary the grooming practice in accordance with the need.

The groomer is set at the factory with 1/2" blade spacing. By removing spacers and adding blades or adding spacers and removing blades the groomer can be changed to 1/4" or 3/4" spacing.

Grooming with 1/4" blade spacing is recommended for fast growth periods (spring through early summer). Grooming with 3/4" blade spacing is recommended for slower growth periods (late summer through fall and winter). During high stress periods it may be desirable to not use the grooming reel.

Note: Grooming with 1/4" blade spacing will tend to remove more grass blades and thatch and cut more runners than grooming with 1/2" or 3/4" blade spacing. If grooming with 1/4" blade spacing, one or two groomings per week will probably be sufficient except during maximum growth periods.

Note: The practice of changing the direction of cut each time the green is cut should be continued when a groomer is used. This rotation will enhance the effects of the grooming.

OPERATION

Idler Control Lever (Fig. 13) is used to engage and disengage grooming reel. Do not engage groomer while cutting unit is running.

Adjusting Bolt (Fig. 13) is used to adjust grooming reel depth/height.

Groomer Quick Adjust Lever (Fig. 13) is used in conjunction with adjusting bolt to attain higher settings. It is also used to raise the grooming reel when grooming is not desired. Press down on lever and rotate to front or side to raise or lower grooming reel.

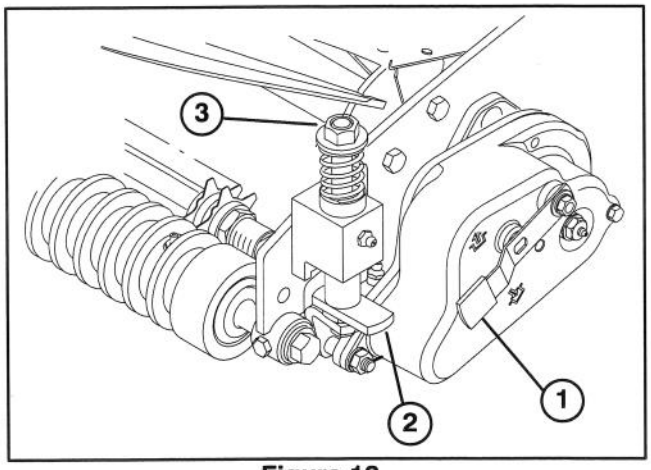

Figure 13
1. **Idler control lever**
2. **Quick adjust lever**
3. **Adjusting bolt**

OPERATING INSTRUCTIONS

ADJUSTING DEPTH/HEIGHT

1. Make sure cutting unit rollers are clean.

2. Turn cutting unit over and position on work surface.

3. Set front roller brackets in the standard (#2) position and level front roller. refer to Cutting Unit Operator's Manual for Leveling procedure.

4. Adjust cutting unit to desired height–of–cut. Refer to chart below for available groomer settings at various cutting unit heights of cut.

5. Rotate Quick Adjust Lever to the "Down" position for deeper settings and to the "Up" position for higher settings.

Note: Negative values indicate groomer blade penetration below roller level. Positive values indicate groomer blade penetration above roller level. Zero is roller level.

Cutting Unit Height–of–Cut (inch)	Groomer Depth/Height Settings (inch)	
	Deepest	Highest
.250	−0.100	+0.310
.150	−0.125	+0.270
.100	−0.140	+0.250

Important: If front roller brackets are positioned in either the #1 or #3 positions, the groomer settings will shift upward or downward respectively. Mowing/Grooming with roller brackets set in the #4 position is not recommended.

6. On one end of the cutting unit, place a gauge bar across the front and rear rollers. Measure the distance from the lowest tip of a groomer blade to the gauge bar.

7. Repeat step 6 on the other end of the groomer reel. Go back to the first side and check/adjust depth/height setting.

8. Reinstall the cutting unit on the traction unit.

TEST GROOMER PERFORMANCE

IMPORTANT: Improper or over aggressive use of the grooming reel (i.e., too deep or too frequent grooming) may cause unnecessary stress on the turf leading to severe greens damage. Use the groomer cautiously.

⚠ DANGER

Before making any adjustments cutting units, disengage the reels, set the parking brake stop engine and remove key from the switch.

It is important to determine the performance of the groomer before putting it into regular use on greens. Toro strongly suggests that a formal test procedure be used. The following is a practical way of determining the proper height/depth setting:

1. Set the main cutting reels to the height of cut that would normally be used without the grooming reel. Use a Wiehle roller on the front and a full roller with scrapers on the rear (a Wiehle roller can be used on the rear at height of cut settings 3/16" or below but this may result in a slightly deeper cut).

2. Set each of the grooming reels at a different setting as follows:

   A. One groomer 1/32" above the roller level.

   B. One groomer set to approximately one half the cutting unit height of cut setting.

   C. One groomer disengaged and raised into the transport position.

3. Make a pass over the test green and look at the results. The cutting unit with the groomer set at one half the cutting unit height of cut will have removed more grass and thatch than the cutting unit with the groomer disengaged. The reel with the groomer set 1/32" above the roller level will have removed significantly more grass and thatch than the other two reels.

4. Examine the test green and determine if one of the two groomed areas gives the desired results. If not, lower and engage the third groomer, increase or decrease the height/depth of the groomers and make another test pass. The amount of grass removed is a key indicator in determining the height/depth setting of the grooming reel.

Check the test green 2 or 3 days after the first grooming for general condition/damage. If the groomed areas are turning yellow/brown, and the non–groomed areas are green, then the grooming was too aggressive.

Note: The color of the grass will change when the grooming reel is used. This can be observed with the first grooming and will continue over time. Experience will allow the greens superintendent to judge by color of the turf (along with close examination) if the current grooming practice is appropriate for the particular green. Because the grooming reel stands up more grass and removes thatch, the quality of the cut will not be the same as without the groomer. This effect is most noticeable the first few times a groomer is used on a green.

OPERATING INSTRUCTIONS

Note: On multiple passes (i.e., double and triple cutting), the groomer will continue to penetrate deeper on each successive pass. Multiple passes are not recommended.

5. After testing the performance of the groomer on a test green and satisfactory results are obtained, grooming on the playing greens can begin. It is important to realize, however, that each green may respond differently to grooming. In addition, growing conditions are constantly changing. Inspect the groomed greens frequently and make adjustments to the grooming procedure as often as necessary.

GRASS BASKETS

The grooming reel will increase the amount of grass and thatch picked up. This means the grass baskets will have to be emptied more often.

To install baskets:

- Adjust grooming reel to maximum height.
- Rotate adjusting rods (Fig. 14) so the top of each rod is 1/8" above the tops of the grooming reel blade. Tighten adjusting rod nuts.
- Readjust groomer height/depth.
- Install baskets

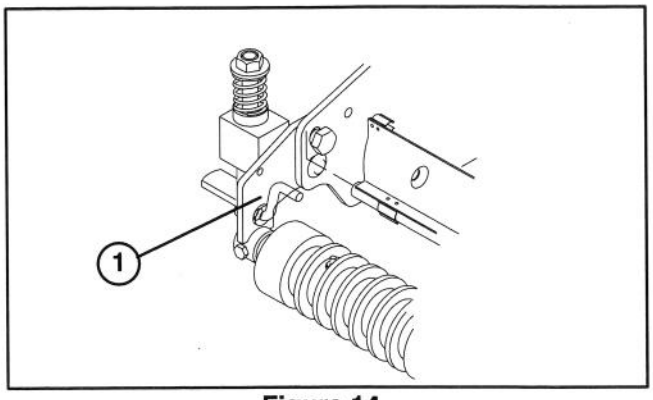

Figure 14
1. Adjusting rod

ROLLERS

If the grooming reels are set to a negative depth relative to the rollers, the groomer will penetrate deeper than the cutting unit. Because of this, the groomer will cut into the base of the grass blade which is stickier. Grass will tend to build up on the rear roller faster than without the groomer. A rear roller scraper is strongly advised when grooming reels are used.

A Wiehle roller is recommended on the front when using a grooming reel. A Wiehle roller can also be used on the rear to avoid grass build up if the height of cut is at or below 3/16". If the height of cut is set over 3/16", then a full roller with scrapers is advised.

MAINTENANCE

CLEANING

Hose off the grooming reel after use. Do not direct the water stream directly at the groomer bearing seals. Do not permit the grooming reel to stand in water so that the components rust.

LUBRICATION

If groomer is used every day, lubricate the (5) grease fittings weekly. Use a hand pump or grease gun (2 or 3 pumps maximum) (Fig. 15). Do not over grease as excess grease may cause seal failure.

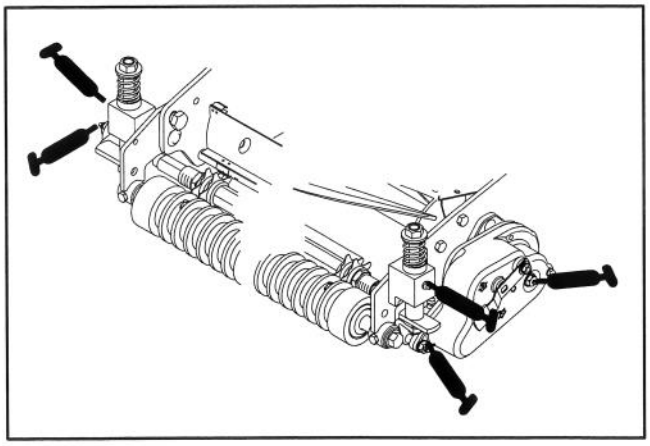

Figure 15

MAINTENANCE

BLADE INSPECTION

Inspect grooming reel blades frequently for damage and wear. Bent blades may be straightened with a pliers. Worn blades should be replaced. When inspecting the blades, check to see that the right and left blade shaft end nuts are tight.

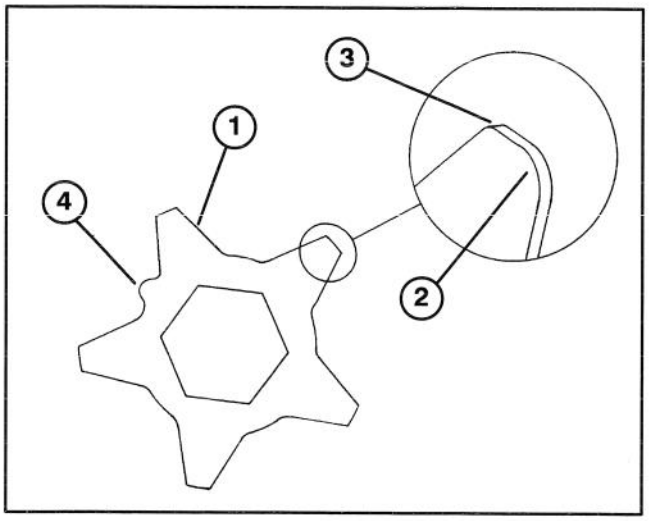

Figure 16

Note: Because the groomer may introduce more debris (i.e., dirt and sand) into the cutting unit than what the reel would normally be exposed, the bedknife and main reel should be checked for wear more frequently. This is especially important in sandy soil and/or when the groomer is set for penetration.

GROOMING REEL REPLACEMENT

The grooming reel can be removed to replace individual blades or replace entire shaft. Remove and replace the grooming reel shaft using the following procedure:

1. From drive side of cutting unit, remove groomer drive cover housing, drive belt, driven pulley nut and pulley, key and spacer.

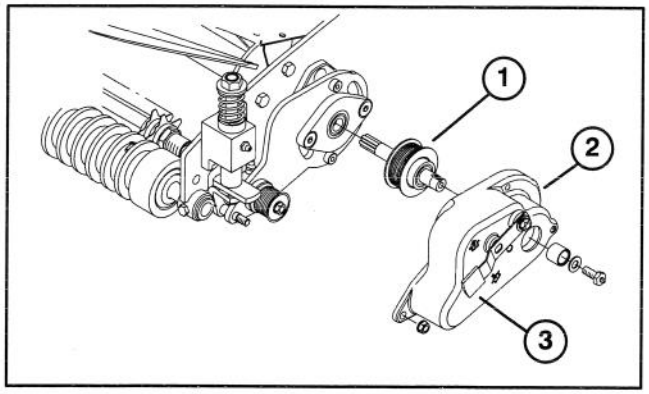

Figure 17

1. **Drive pulley**
2. **Drive cover housing**
3. **Driven pulley**

2. On opposite end of cutting unit, remove cap plug w/grease fitting, locknut retaining reel shaft to bearing housing, capscrew and spacer retaining bearing housing to cutting unit. Remove groomer reel assembly.

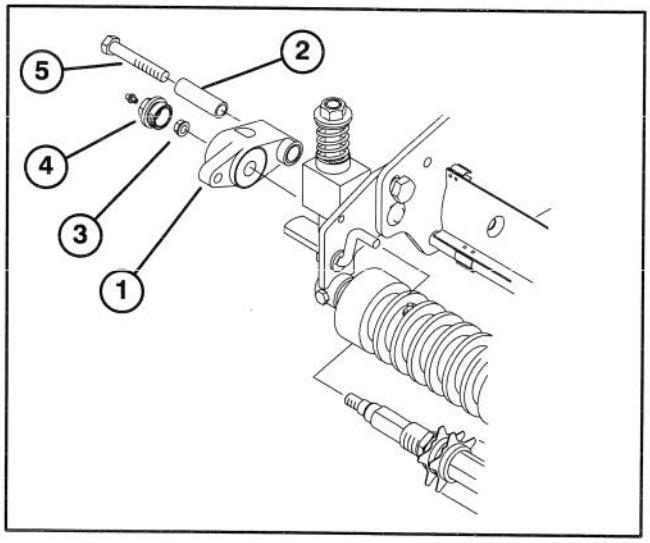

Figure 18

1. **Bearing housing**
2. **Pivot spacer**
3. **Locknut**
4. **Cap plug w/grease fitting**
5. **Capscrew**

3. Assemble the shaft in reverse order. Using the location marks on each blade as a guide, assemble each blade so the location mark is offset one flat on the hexagonal shaft.

Note: The location marks on each blade are offset so they can be used to achieve proper grooming reel setup. Stack the blades and match the location marks before installing them on the groomer reel shaft.

4. Using a hand pump grease gun, lubricate the grooming reel shaft bearings with 2–3 pumps of grease.

5. Check grooming reel height/depth setting.