FORM NO. 3312-900 Rev. A

TORO®

MODEL NO. 03745 — 60001 THRU 80001 & UP
03755 — 60001 THRU 80001 & UP
MODEL NO. 03737 — 60001 THRU 80001 & UP
03747 — 60001 THRU 80001 & UP
MODEL NO. 03741 — 60001 THRU 80001 & UP
03751 — 60001 THRU 80001 & UP

OPERATOR'S MANUAL

REELMASTER 450-D

5, 7 & 11 BLADE CUTTING UNITS

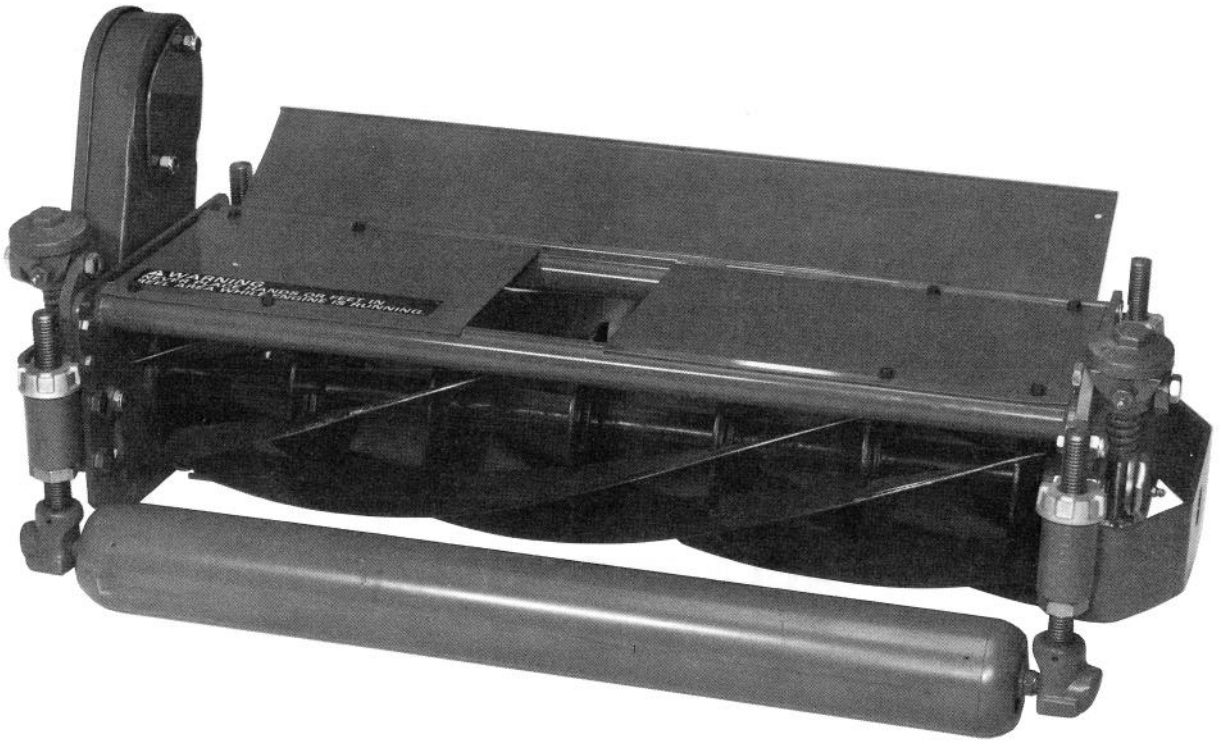

Since this operator's manual only has information necessary to maintain and operate the 450-D cutting units, we suggest you keep this manual with your traction unit operator's manual so that both may be referred to for instructions concerning safe operation and proper maintenance procedures.

PRICE $1.00

FOREWORD

The REELMASTER 450-D mower's 5, 7 & 11 blade cutting units have advanced concepts in engineering, design and safety. When adjusted and maintained properly, they are very reliable.

Read this manual to familiarize yourself with the safety instructions and the product before beginning operation. The three major sections of this manual are:

1. Set Up Instructions
2. Cutting Unit Adjustment
3. Maintenance

Note that safety, mechanical, and certain general information in this manual is emphasized. WARNING and CAUTION identify safety related information. IMPORTANT identifies mechanical information worthy of special attention.

If assistance concerning set-up, critical adjustments, operation, maintenance, or safety in use of the mower is ever needed, contact the local authorized TORO distributor. Refer to the Telephone Directory "Yellow Pages" for assistance in locating a Toro Distributor. In addition to skilled factory-trained service technicians, the distributor has other TORO products, approved accessories, and genuine Toro replacement parts. Keep your TORO all TORO. Buy genuine TORO replacement parts and accessories; use of non-genuine or "will-fit" components could adversely affect the safety, quality, and reliability built into your Toro Reelmaster 450-D mower.

See the Traction Unit Manual for additional safety instructions.

TABLE OF CONTENTS

	Page
LOOSE PARTS	3
PARTS REQUIRED TO MOUNT FIVE CUTTING UNITS	3
SAFETY AND INSTRUCTION DECAL	3
KNOW YOUR CUTTING UNIT	3
SPECIFICATIONS	4
Optional Accessories	4
SET UP INSTRUCTIONS	4
Installing Tipper Plates and Weights	5
Installing Floatation Kit Assemblies	6
Securing Cutting Units to Lift Arms	6
Mounting #4 and #5 Tipper Brackets	7
Mounting Hydraulic Motors to Cutting Units	7
Cutting Unit Orientation	8
Float Position	8
Fixed Position	8
CUTTING UNIT ADJUSTMENT	9
Adjusting Reel to Bedknife Contact	9
Height-of-Cut Adjustment (Floating)	10
Quick H-O-C Adjustment for (Floating)	11
Height-of-Cut Adjustment (Fixed)	11
Adjusting Skids and Front Roller	11
LUBRICATION	12
MAINTENANCE	13
Backlapping	13
Servicing The Bedknife/Bedbar Assembly	14
Servicing The Reel Assembly	14
Removing The Roller	16
Installing The Roller	17
IDENTIFICATION AND ORDERING	17
MAINTENANCE RECORD	18-19
THE TORO PROMISE	Back Cover

©The Toro Company — 1987

LOOSE PARTS

DESCRIPTION	QTY.
Registration Card	1

PARTS REQUIRED TO MOUNT FIVE CUTTING UNITS

3 — Right Hand Cutting Units
2 — Left Hand Cutting Units
1 — Front Roller or Skid Kit
1 — Floatation Kit
Includes: 3 Weights, 1 Backlapping Brush and 1 Gauge Bar

SAFETY AND INSTRUCTION DECAL

The following safety and instruction decal is installed on the cutting unit. If it becomes damaged or illegible, replace it. The decal is listed in your Parts Catalog. Order replacements from your Authorized Toro Distributor.



ON TOP COVER
(Part No. 59-7790)

KNOW YOUR CUTTING UNIT

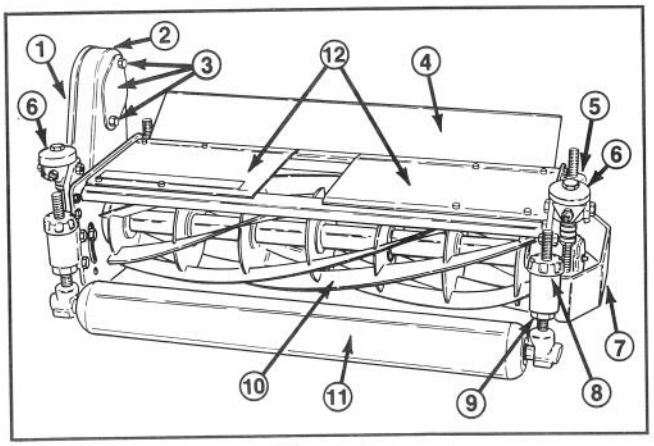

Figure 1

1. *Drive housing cover*
2. *Drive housing*
3. *Reel motor fasteners, drive plate shield and shipping cover*
4. *Grass deflector*
5. *Rear roller adjusting assembly (2)*
6. *Reel to bedknife adjustment assembly (2)*
7. *Guard*
8. *Front roller adjusting knob (2)*
9. *Cone nut*
10. *Reel assembly*
11. *Front roller (optional)*
12. *Top covers*

SPECIFICATIONS

Construction: Welded steel frame and reel with heavy duty, self-aligning ball bearings. Heavy duty steel rear roller with tapered roller bearings. Rear roller and bedbar are isolated and mounted in rubber bushings for quiet, vibration-free operation. Adjustable deflector shields are standard. Stainless steel components are used at key points for added durability.

Reel Configuration: The 5, 7 and 11 blade heavy-duty welded reels all have 8 in. (20.3 cm) diameters and are 29-3/4 in. (75.5 cm) wide.

Bedknife/Bedbar Assembly: A replaceable, single-edged, alloy steel bedbar is induction hardened. It's fastened with steel screws to a precision ground surface on the high strength, fabricated steel bedbar. The stress-relieved machined bedbar is mounted with four (4) vibration isolation bushings.

Bedknife to Reel Adjustment: Two positive control adjustment knobs at each side of the frame adjust the reel to bedknife contact. Each adjustment knob contains a detent providing 0.001 in. (0.0254 mm) reel movement for each indexed position. Top pivot points have grease fittings for lubrication.

Rear Roller: 3-1/2 in. (89 mm) diameter steel roller has greaseable tapered roller bearings. A double lip oil seal and wear sleeve isolates grit and moisture from the bearings.

Height-of-Cut: 5 Blade — 1 to 3 in. (25 to 76 mm).
7 Blade — 1/2 to 1-3/4 in. (9.5 to 45 mm).
11 Blade — 3/8 to 3/4 in. (9.5 to 19 mm).

Height-of-Cut Adjustment: Quick adjustment and positive locking is provided by the height of cut adjusting knob and locking type cone nut. Gauge marks of 1/4 in. (6.3 mm) are provided as a reference for easy changes of height-of-cut.

Clip (variable to match cutting conditions):

5 Blade Cutting Unit: .176 in. per mph
(.352 in. at 2 mph — 1.32 in. at 7.5 mph)
7 Blade Cutting Unit: .126 in. per
(.252 in. at 2 mph — .945 in. at 7.5 mph)
11 Blade Cutting Unit: .080 in. per mph
(.16 in. at 2 mph — .600 in. at 7.5 mph)

Lubrication: Easily accessible grease fittings for bearings and all major pivot points. (Refer to Figs. 19, 20 & 21).

Drive: The reel drive motor turns a maintenance-free cog belt which drives the reel. Drive pulley and cog belt are encased in a drive housing for safety and protection from contamination.

Grass Deflector Shields: Fully Adjustable.

OPTIONAL ACCESSORIES:

Model No. 03760 — Floatation Kit (1 per mach.).
Model No. 03740 — Wiehle Roller Kit (1 per mach.).
Model No. 03744 — Side Skid Kit (1 per mach.).
Model No. 03738 — Sectional Roller Kit (1 per mach.).
Model No. 03742 — Full Roller Kit (1 per mach.).
Model No. 03720 — Grass Collection System
Model No. 03732 — Dethatching Unit, RH (3 per mach.).
Model No. 03730 — Dethatching Unit, LH (2 per mach.).
Part No. 59-6090 — Rear Roller Scraper Kit (1 per c.u.).
Part No. 62-6220 — Front Roller Scraper Kit (1 per c.u.).

The front roller, or other optional accessory for the front of the cutting unit, is shipped separately. Use the instructions and parts supplied with the selected option for installation on the cutting unit.

SET UP INSTRUCTIONS

IMPORTANT: Thoroughly Read both Cutting Unit and Traction Unit Operator Manuals. Failure to do so may result in damage to the cutting unit and/or poor performance.

Note: Reference to the left and right side of the cutting unit is made from the operators perspective as if the operator were seated on the machine and the unit was in normal operation.

CAUTION

Never install or work on the cutting units or lift arms with the traction unit engine running. Always stop the engine and remove the key first.

SET UP INSTRUCTIONS

INSTALLING TIPPER PLATES AND WEIGHTS TO CUTTING UNITS

A. Refer to Figure 2 and layout all five cutting units on the floor in front of the 450-D. Position 3 R.H. (right hand) cutting units (all three are alike) as #1, #3 and #5. Position the left hand #2 and #4 cutting units also (both are alike).

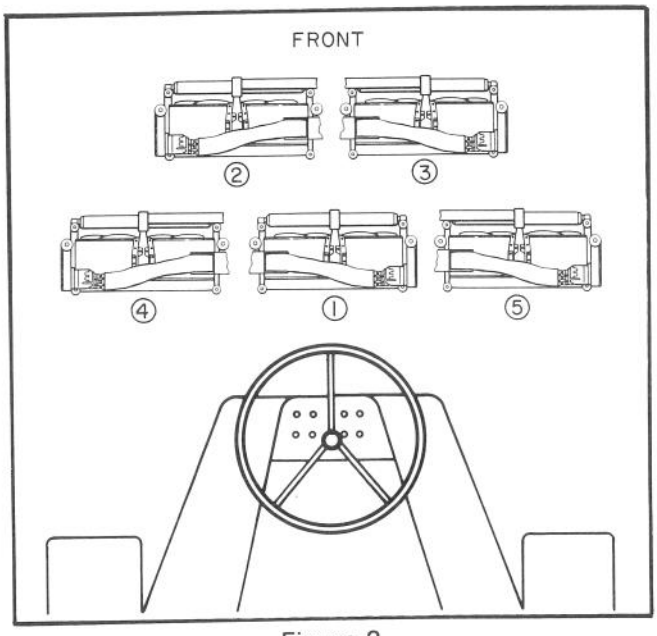

Figure 2
Cutting Unit Layout

B. Install front roller or skid kit on all five cutting units. Installation instructions and cutting unit guards are included with each front roller and skid kit.

C. Install two tipper plates to the front L.H. or #2 cutting unit and the front R.H. or #3 cutting units using capscrews that come with the tipper plates (Fig. 3). Discard the original cover screws that came on the cutting unit.

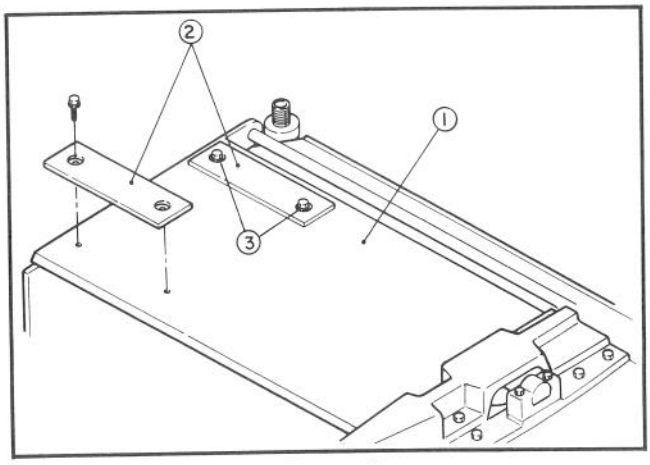

Figure 3

1. Inboard cutting unit cover
2. Tipper plates
3. Cover capscrews

Note: Do not install tipper plates on the #1 cutting unit.

D. Mount one weight to each cutting unit guard (Fig. 4) on the #1, #2, & #3 cutting units. Guards are located at the opposite end of each cutting unit drive housing. Use 1/2" carriage bolts provided with weights (Fig. 4).

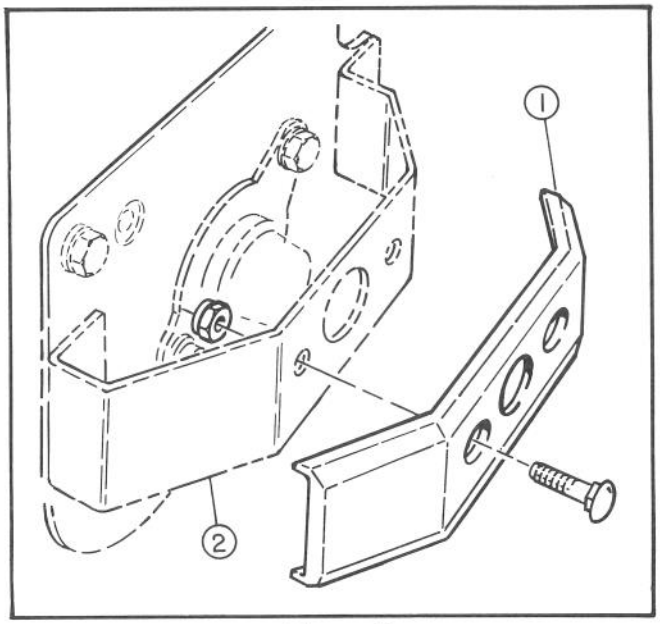

Figure 3

1. Weight
2. Guard

E. On the #4 and #5 cutting units remove 4 self tapping cover capscrews located at the opposite end of the cutting unit drive housing (Fig. 3). Discard cover screws. Drill four 9/32" holes completely through cutting unit tubes using the self tapping screw holes as a pilot (Fig. 5). Holes will be used later to mount #4 and #5 tipper brackets.

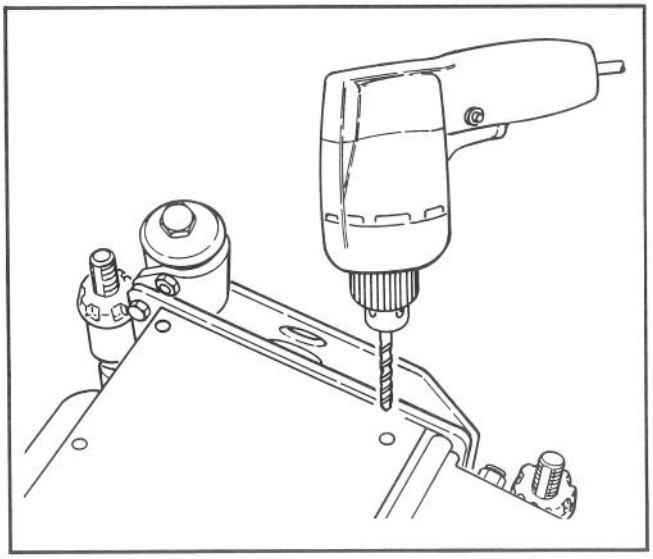

Figure 4

SET UP INSTRUCTIONS

INSTALLING FLOATATION KIT ASSEMBLIES

Mount Floatation Kit Assemblies (Fig. 6) to all five cutting units using supplied "U" bolts. Male end of floatation assembly extends forward. Tighten U-bolts evenly.

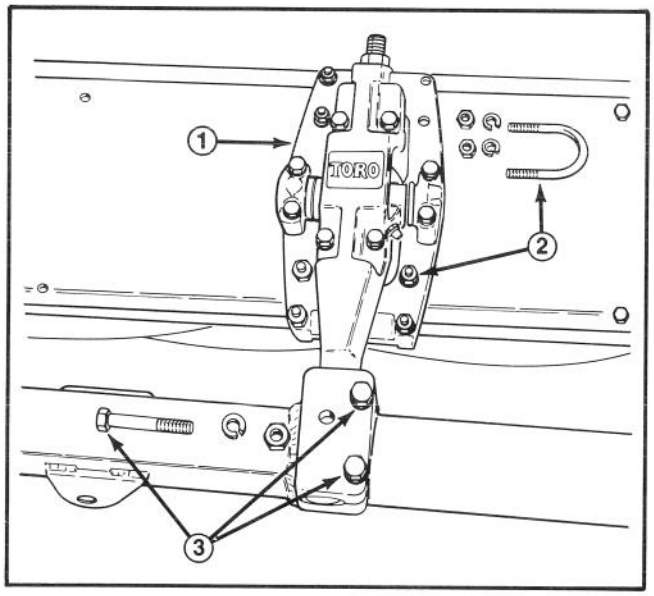

Figure 6

1. *Floatation kit assembly*
2. *U-Bolts*
3. *Lift arm bolts*

Keep fingers away from floatation U-joint to prevent pinching.

SECURING CUTTING UNITS TO LIFT ARMS

A. Remove 3 (metric) bolts from each of the five lift arms (Fig. 6).

Remember: The smaller diameter bolt goes through both the pivot arm and the lift arm. Keep these bolts separate.

B. With parking brake "ON" start the traction unit and adjust the engine to half throttle. Be sure to release the lift arm lock lever for the #1, #2 and #3 cutting units and put the reel lift control for the #1, #2, and #3 cutting units in the lower position (Fig. 7). Release the lever and let it return to the neutral position.

IMPORTANT: Do not allow lever to snap back into the neutral position or the lift arms may not go into float.

C. Stop the traction unit and remove the key. Manually pull the lift arms, one at a time, to floor level. Repeat this procedure for the #4 and #5 cutting units.

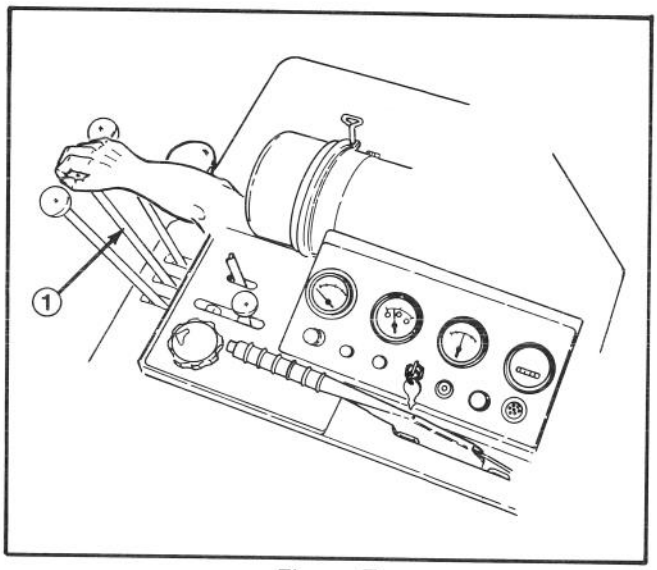

Figure 7

1. *Reel lift control*

CAUTION

Without cutting units installed restarting the engine will result in lift arms raising.

Note: To gain better access for mounting the #1 cutting unit remove the panel on the right rear side of the machine (Fig. 8).

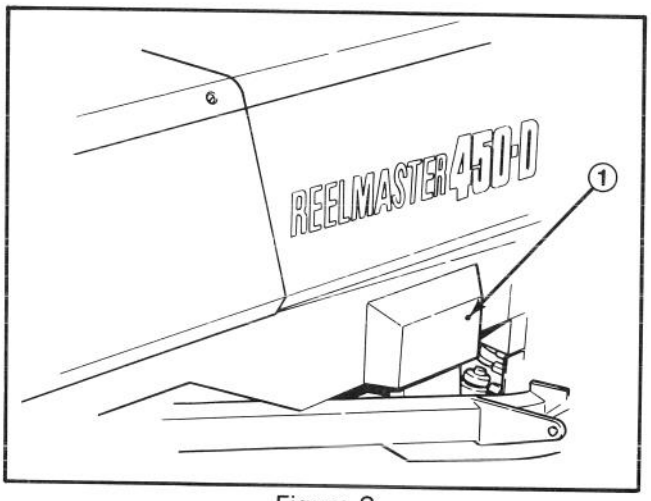

Figure 8

1. *Panel*

C. Roll the appropriate cutting unit forward and match the male end or pivot arm with the hole in the lift arm. **(Note:** It may be necessary to spread slotted block on lift arm slightly to slide pivot arm fully into hole.) Reinstall three lift arm bolts but do not tighten (Fig. 6).

SET UP INSTRUCTIONS

D. To assure good quality of cut and maximum overlap of cutting units move the #2, #3, #4 and #5 cutting units toward the center line of the machine by rotating the pivot arm. As each cutting unit is moved toward the center line of the machine tighten the floatation kit and lift arm fasteners to secure its position (Fig. 6).

MOUNTING #4 and #5 TIPPER BRACKETS

A. The #4 and #5 tipper brackets should be mounted loosely to hydraulic hoses before being installed on the cutting units. Position the smallest hydraulic line toward the rear of the machine (Fig. 9).

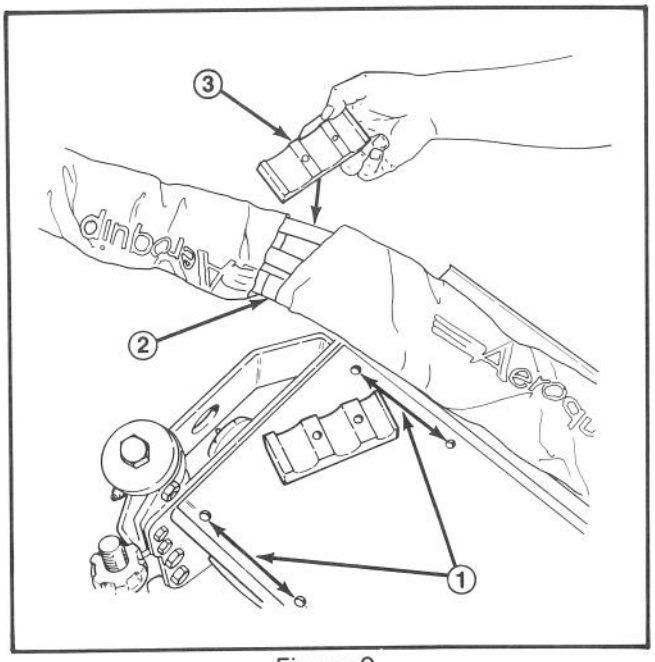

Figure 9

1. Tipper bracket mounting holes
2. Hydraulic hoses
3. Clamps

B. Leave the clamps that the hydraulic hoses pass through slightly loose on the underside of the tipper bracket until final positioning of the hydraulic hoses has been done.

MOUNTING HYDRAULIC MOTORS TO CUTTING UNITS

A. Remove locknuts, bolts, shipping cover and drive plate shield (Fig. 10) from the cutting unit.

B. Discard shipping cover and install the drive plate shield onto the reel drive motor flange (Fig. 11). Be sure the widest portion of the shield is at the top.

Note: Check to see that motor pulley set screws are tight on motor shaft before installing motor onto cutting unit (Fig. 12).

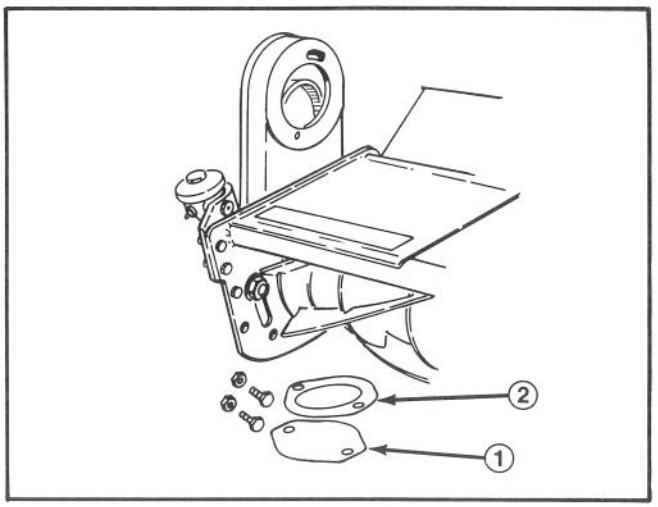

Figure 10

1. Shipping cover
2. Drive plate shield

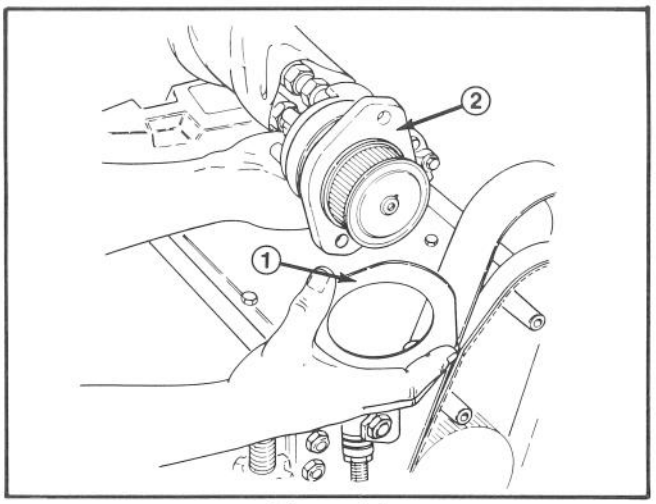

Figure 11

1. Drive plate shield
2. Reel drive motor flange

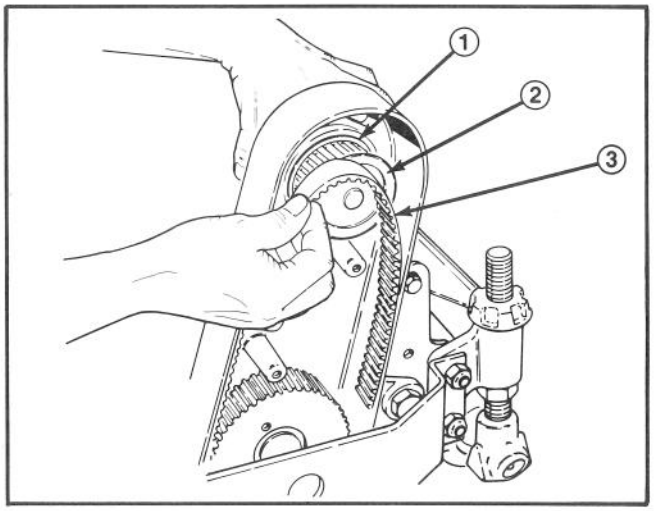

Figure 12

1. Hydraulic motor
2. Motor pulley
3. Drive belt

C. Insert the reel drive motor pulley through the housing and slip the cutting unit drive belt over the pulley (Fig. 12).

Insert the two (2) reel drive motor mounting bolts (heads on inside of the drive housing — flatwasher on top bolt) through the reel motor flange holes. Thread the locknuts onto the bolts. Rotate reel motor upward in the slotted hole in the housing to tension the drive belt and tighten the fasteners (Fig. 13) to approx. 25 ft. lbs. (34 N·m). **Note:**Proper belt tension is achieved when belt deflects approximately 1/8" (3 mm) at mid-point (Fig. 13).

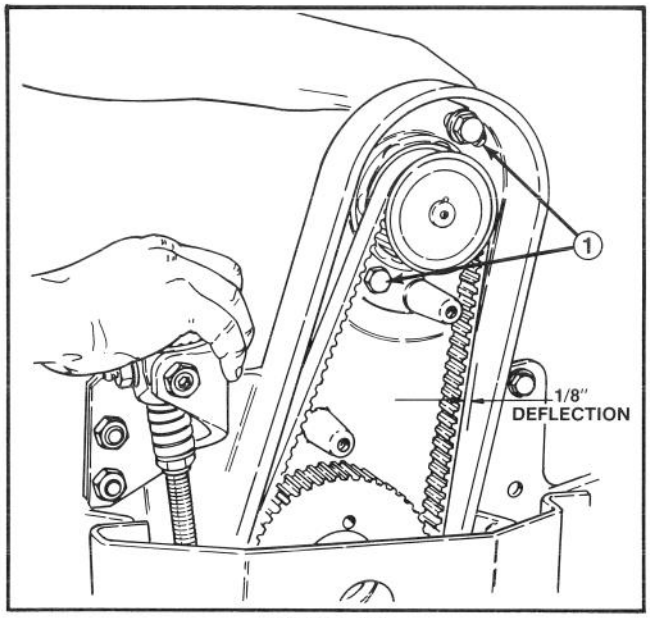

Figure 13

1. Reel motor fasteners

IMPORTANT: Rotate motors by hand only. Never place a bar between hose fittings on hydraulic motors — motor damage may result.

D. Install the gasket and drive housing cover after making sure the ends of the gasket are at the bottom of the housing to allow for drainage.

IMPORTANT: When hydraulic motors have been mounted to the cutting units make sure hydraulic hoses lay flat and do not contact the frame of the machine when the #4 and #5 cutting units are in the raised position. There should also be sufficient slack between the tipper bracket and the hydraulic motor so that hoses are above and not in contact with the floatation kit. If hoses appear twisted once the hydraulic motors have been mounted and the belts tightened, loosen swivel nuts at the motor and reposition hoses. This can greatly increase the life of the hoses. With cutting units down, all cutting unit hoses should have a flat natural lay and be free from twist.

E. Tighten tipper bracket clamps on #4 and #5 (Fig. 9).

Note: Refer to the Traction Unit Operator's Manual for instructions on setting the adjustable hydraulic counterbalance.

CUTTING UNIT ORIENTATION

Cutting Units can be operated in either of the two following positions:

A. Float Position (Fig. 14) — Allows cutting units to float freely and follow turf undulations, this position is recommended when mowing at heights-of-cut less than 1-inch (25 mm) and removing less than approx. one inch (25 mm) of clippings.

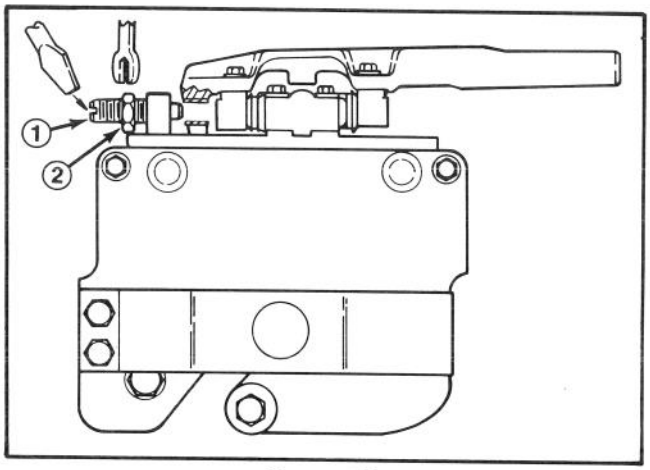

Figure 14
Cutting Unit Float Position

1. Lockout pin 2. Jam nut

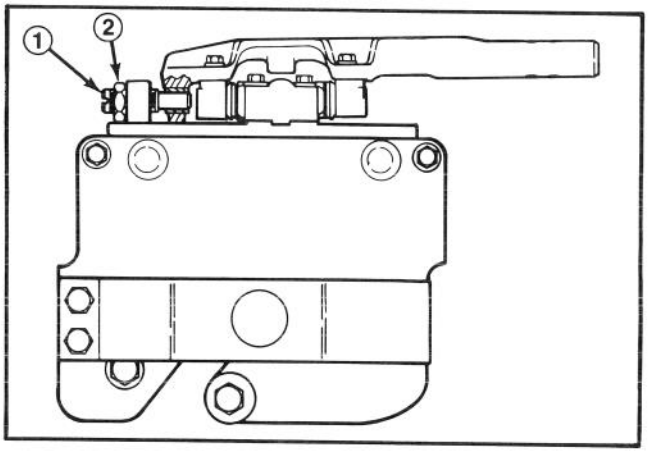

Figure 15
Cutting Unit Fixed Position

1. Lockout pin 2. Jam nut

B. Fixed Position (Fig. 15) — Generally used for heights-of-cut above one inch (25 mm), where more than approx. 1" (25 mm) of grass is being removed, the front roller is fully raised in the anti-scalp position or when skids or dethatching units are installed. In the fixed position, cutting units are locked to the pivot arm and do not follow uneven contours in the turf as they would in the float position.

SET UP INSTRUCTIONS

To set in the fixed or float position — start the engine and lower the cutting units. Stop the engine and remove key from switch.

Float Position: Loosen jam nut, unscrew lockout pin until it disengages from the pivot arm. Tighten jam nut (Fig. 14).

Note: Pin must be retracted sufficiently to clear float arm through the entire float range.

Fixed Positions: Loosen jam nut on lockout pin and screw pin into hole in pivot arm (Fig. 15). Tighten jam nut to secure lockout pin.

Note: Damaged lift arms will affect quality of cut. Replace damaged parts.

CUTTING UNIT ADJUSTMENT

CAUTION

Before adjusting reel to bedknife, raise and fully latch cutting units. Remove key from the ignition switch. Keep others off machine while adjusting cutting units.

ADJUSTING REEL TO BEDKNIFE CONTACT

Before adjusting height-of-cut and each day before operating, check reel to bedknife contact, regardless if quality of cut had previously been acceptable.

A. Slowly and carefully rotate reel, listening for light contact across the full length of the reel and bedknife.

B. If no contact — turn the adjusting knobs clockwise, one click at a time, until light contact is felt and heard.

C. If excessive contact — Turn the adjusting knobs counter-clockwise, one click at a time, until no contact is noticed. Then equally turn both adjusting knobs clockwise, one click at a time, until light contact is felt and heard between the reel and bedknife. Final adjustment should always be in the tightening (clockwise) direction.

Note: To ensure proper spring tension on adjusting knob, make sure spring is compressed to a height of 1.25" (Fig. 16). Adjust spring height by rotating nut up or down.

CAUTION

When adjusting the cutting units, wear heavy gloves and use care when turning reels by hand. Sharp edges can cut or pinch hands or fingers.

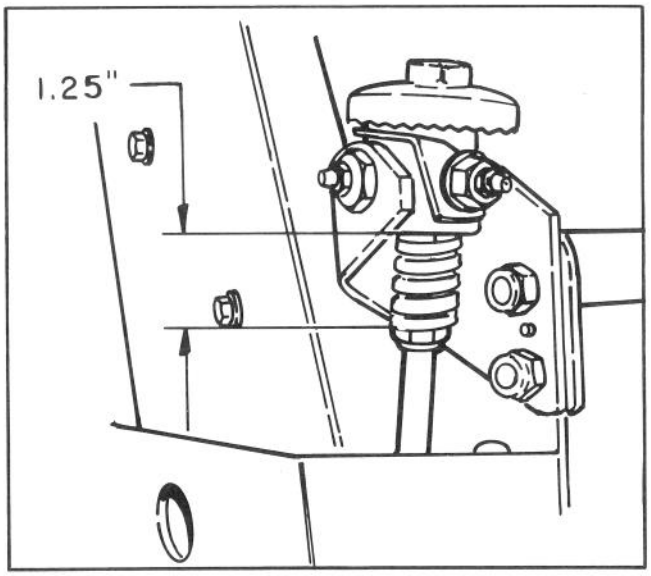

Figure 16

Note: One adjustment knob is slightly harder to turn than the other, due to cutting unit design. Rotate by hand the reel to determine true contact between reel and bedknife during adjustment.

IMPORTANT: Adjusted correctly, the reel will cut paper (approx. .003" thick) across its entire length.

The Reelmaster 450-D cutting units will provide optimum mowing performance when adjusted and maintained correctly. Keeping a precise reel to bedknife adjustment (light contact), at each end of the cutting unit will produce a continual self-sharpening action. Therefore, sharp cutting edges are maintained, good quality of cut assured, and the need for corrective re-sharpening reduced.

IMPORTANT: Cutting units with excessive contact between the reel and bedknife are noisy, consume excessive power, shorten component life and result in overall poor performance. Light contact between the reel and bedknife, once the cutting unit is warmed up, provides optimum mowing performance and component life.

CUTTING UNIT ADJUSTMENT

HEIGHT-OF-CUT ADJUSTMENT FOR A FLOATING CUTTING UNIT

Overview of Procedure:

STEP 1 — Adjust reel to bedknife contact
STEP 2 — Level rear roller to reel
STEP 3 — Final height-of-cut adjustment using gauge bar.

STEP 1 — Adjust Reel to Bedknife Contact

A. Adjust reel to bedknife contact on all cutting units. (Refer to ADJUSTING REEL TO BEDKNIFE CONTACT, page 9).

STEP 2 — Level Rear Roller to Reel

B. Lock cutting units in the Fixed Position (refer to CUTTING UNIT ORIENTATION section page 8). Lower the cutting units onto a flat surface such as a piece of 3/4" or 1" plywood (at least 20" x 30" in size). Raise the front rollers up so they do not contact the flat surface.

C. Insert a piece of bar stock 25" - 28" (70 cm) long (Fig. 17), and approximately 1/8" (3 mm) thicker than the desired height-of-cut, under the reel and up against the bedknife cutting edge (Fig. 17). The reel (not bedknife) must contact the bar stock along its full length.

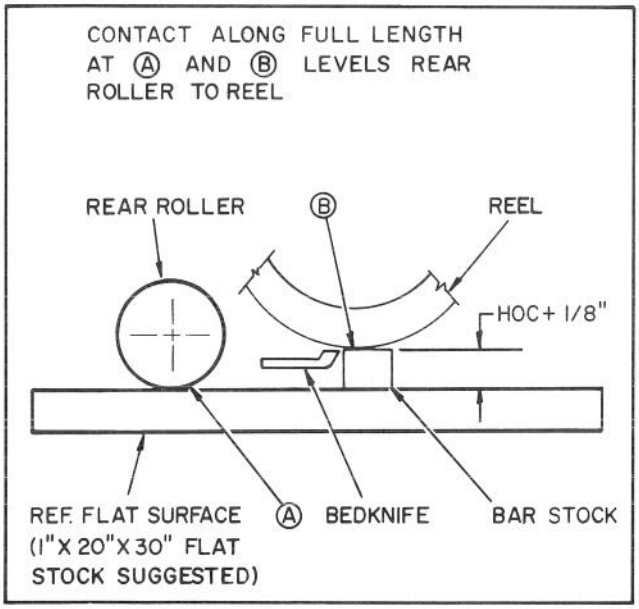

Figure 17
Leveling Rear Roller to Reel

Note: Using a bar 1/8" (3 mm) thicker than height-of-cut provides proper bedknife attitude (heeled "up" in back) required for excellent low height-of-cut performance.

D. Loosen rear roller jam nuts and adjusting knobs and push roller down against flat surface. At this point the reel should be contacting the bar stock and the rear roller contacting the flat surface. Contact should exist along the entire length of the reel and rear roller. Tighten rear roller adjustment knobs and jam nuts. Recheck to be sure roller and reel are both still making contact after the jam nuts have been tightened. Check roller contact by trying to slide paper between the roller and the flat surface.

E. Rear roller is now leveled to the reel.

STEP 3 — Final Height-of-Cut Adjustment Using Gauge Bar

F. Raise cutting units and lock in the transport position. Shut off the engine and remove the key.

G. Use gauge bar (Toro Part No. 59-7900) to set final height-of-cut by adjusting front roller only.

H. Loosen the gauge bar jam nut and adjust the screw to set dimension between underside of screw head and gauge bar for desired height-of-cut. (Fig. 18). Tighten the jam nut to secure the adjustment. Hook screw head over cutting edge of bedknife and position bar against bottom of front roller (Fig. 19).

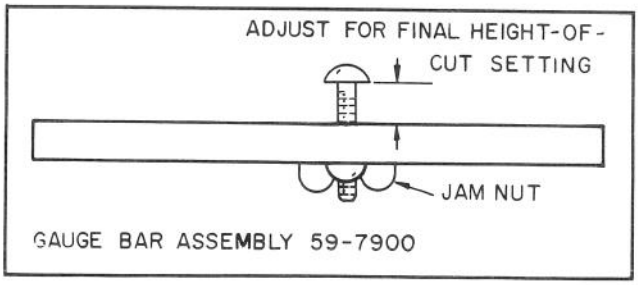

Figure 18
Gauge Bar Assembly

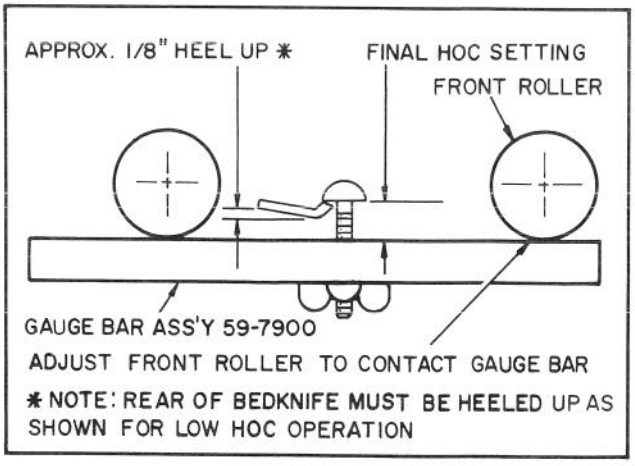

Figure 19
Final Height-of-Cut Adjustment Using Gauge Bar

CUTTING UNIT ADJUSTMENT

I. Loosen front roller nuts and adjust both ends of the front roller until it contacts gauge bar at both ends. With the gauge bar held firmly against the bottom of the rollers adjust the front roller so the screw head just slips over the lip of the bedknife (Fig. 19). Tighten front roller nuts.

IMPORTANT: Set properly, front and rear rollers will contact gauge bar and screw head will be snug over bedknife cutting edge when checked at both ends of the reel.

J. Loosen lockout pin so cutting unit can float freely (refer to Cutting Unit Orientation, Fig. 14).

QUICK METHOD FOR CHANGING HEIGHT-OF-CUT AFTER INITIAL SET UP OF A FLOATING CUTTING UNIT

If the reel to bedknife adjustment has been set (Step 1) and the rear roller leveled to the reel (Step 2) the 450-D cutting unit may be quickly changed from one height-of-cut to another by using the gauge bar (Part #59-7900) and adjusting the front roller only. In many cases, an entire machine can be done quickly by using the gauge bar to set the front roller of one cutting unit. The remaining cutting units can then be set by loosening their front roller jam nuts and turning each front roller adjustment knob the same number of turns and in the same direction as the first unit.

HEIGHT-OF-CUT ADJUSTMENT FOR A FIXED CUTTING UNIT

A. Lock cutting unit in fixed position (refer to Cutting Unit Orientation, Fig. 15).

B. Adjust reel to bedknife contact (Page 9).

C. Loosen nuts securing skids or front roller and raise to highest position.

D. Loosen knobs and jam nuts securing rear roller. Lower roller beyond desired height-of-cut (assures proper bednife attitude).

E. Lower cutting unit onto a flat surface, such as a 1" x 20" x 30" piece of plywood. Shut off engine and remove the key.

F. Insert piece of bar stock (Fig. 17) 25"-28" (70 cm) long with thickness equal to desired height-of-cut, under entire length of the reel, next to bedknife.

G. Adjust rear roller adjustment knobs and jam nuts until full length of the rear roller contacts the flat surface and the full length of the reel (not bedknife) contacts the bar stock. Tighten rear roller knobs and jam nuts.

ADJUSTING SKIDS AND FRONT ROLLER — (mowers in Fixed position)

After skid kit or front rollers are installed (installation instructions are included with each option) make the following adjustments to prevent them from pushing down uncut grass or scalping on undulating terrain:

1. Lock each cutting unit in the fixed position (Refer to Cutting Unit Orientation, Fig. 15). Set the reel to bedknife adjustment and height-of-cut adjustment (Page 9-11).

2. Position the cutting units on a flat, level surface (a 1" inch [25 mm] thick piece of plywood is ideal).

3. Skids and front rollers used to prevent scalping should not ride on the ground. Adjust each skid or front roller so it is 1/8 - 1/4 in. (3-6 mm) or higher above the level surface. Allow greater clearance at the higher height-of-cut settings.

4. Proper adjustment is achieved when the cutting unit does not scalp the grass in normal mowing conditions and yet is set high enough not to mar the turf and create undue wear on the skids or rollers.

Note: Skids are used only with the cutting unit in the fixed position. Front rollers may be used with the cutting unit in either the fixed or floating position.

LUBRICATION

Before and after greasing, wipe each grease fitting with a clean rag. Use a hand-operated grease gun and #2 general purpose grease to lubricate the eight grease fittings. Applying too much pressure will ruin the seals and leaking grease could cause damage to grass.

IMPORTANT: Before washing the machine, shut off the engine and remove the key. Toro recommends daily lubrication of reels and rollers immediately after washing the machine. This helps to minimize water entering the reel and roller bearings.

If the cutting units are washed in the raised position be sure to lower them to the ground after washing. This allows water to drain from the ends of the rollers and reel bearing housings.

1. **Reel shaft and Roller Bearings** — Lubricate bearings with 3 or 4 pumps of grease. Daily lubrication of these fittings purges water and other contaminants, increasing service life and maintaining excellent quality-of-cut.

Note: When greasing roller bearings — grease forced from bearings will not be visible around the roller shaft.

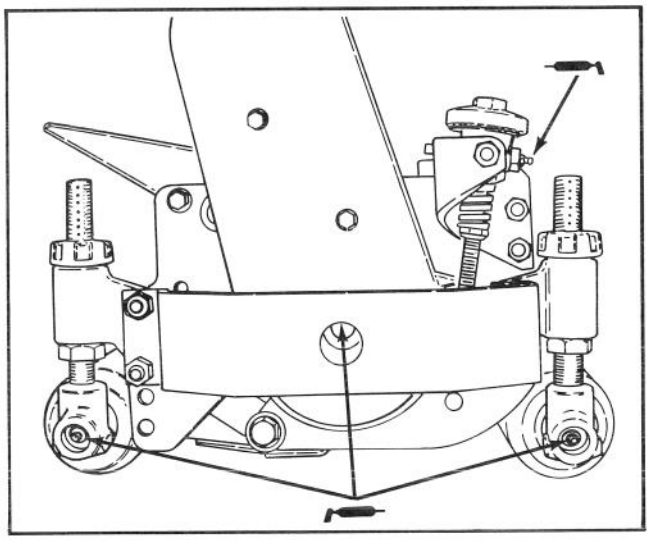

Figure 20

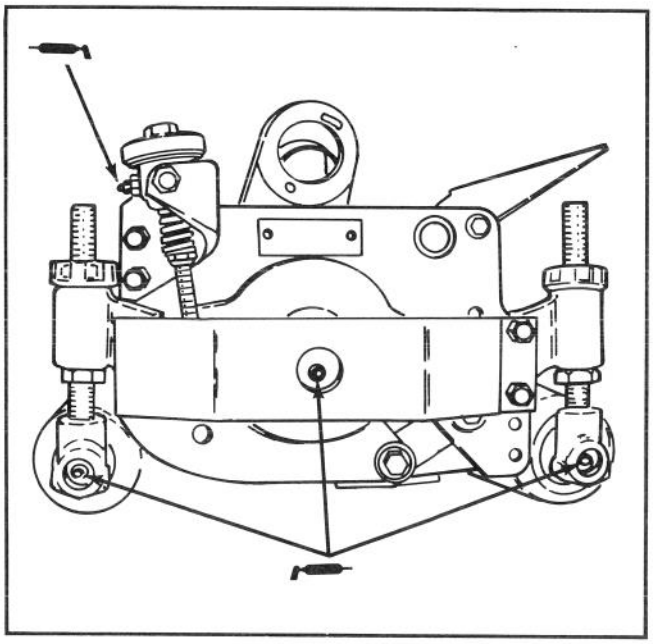

Figure 21

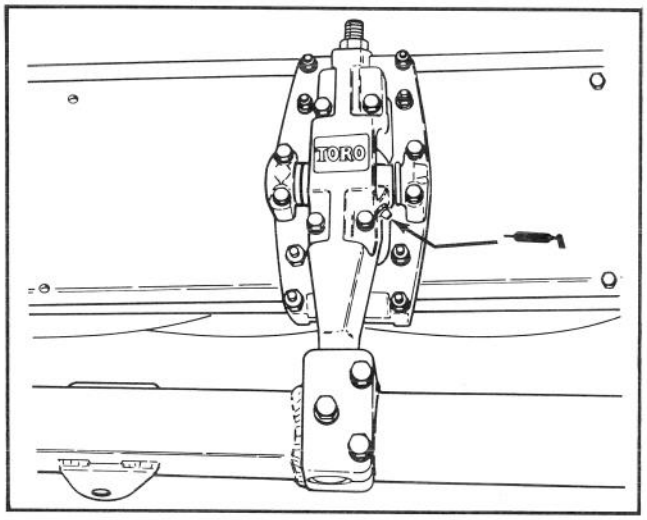

Figure 22

2. **Reel to Bedknife Adjusting Knobs and Floatation Kit Pivots** — Lubricate with one pump of grease weekly.

MAINTENANCE

BACKLAPPING

DANGER

DURING BACKLAP OPERATION REELS ARE UNDER POWER. CONTACT WITH ROTATING REELS CAN RESULT IN PERSONAL INJURY. DO NOT ADJUST CUTTING UNITS WHILE ENGINE AND REELS ARE OPERATING. INSTRUCT OPERATOR TO STOP THE REELS AND SHUT THE ENGINE OFF WHEN ADJUSTMENT IS NECESSARY.

Use a good grade of medium grit (80 courseness) lapping compound with a water soluble carrier so the compound will be easily washed away after completion of the operation. Dry lapping compound should be mixed with liquid detergent until it has a free-flowing consistency.

Two people are required to perform backlapping. Good communication between one another is necessary and caution should be used when making each move. With one person on the seat to operate the controls (operator) the other performs the backlapping operation. **Note:** Before starting the engine raise the grass deflector on the #1 cutting unit (center) and tighten fasteners to retain the deflector in the raised position.

1st persons duties (Operator) —

A. Sit on the seat and engage parking brake.

B. Turn reel speed knob counter-clockwise to SLOWEST (#1) position.

C. Start the engine and run at minimum throttle. Lower either:
   1.) the center three cutting units (#1, 2, & 3) or
   2.) the left hand (#4) cutting unit or
   3.) the right hand (#5) cutting unit.

   The center three cutting units run and shut off together. With the #4 & #5 cutting units up and latched (automatically shut off) and the #1, #2 & #3 cutting units down, backlap the center (#1) cutting unit from the rear of the machine with the long handled brush. Backlap the #2 and #3 cutting units from the front of the machine.

D. Wait for 2nd person's instruction to engage reels in BACKLAP mode, then pull up on control lever and move it to BACKLAP position.

E. Follow 2nd person's instructions. Be prepared to stop reels and engine quickly in case of an emergency.

2nd persons duties —

A. Instruct operator when to start and stop reels.

DANGER

UNDER NO CIRCUMSTANCES USE A SHORT-HANDLED PAINT BRUSH TO APPLY BACKLAPPING COMPOUND. A ROTATING REEL CAN ACTUALLY PULL A SHORT HANDLED PAINT BRUSH AND THE USERS HAND INTO THE REEL CAUSING SERIOUS PERSONAL INJURY.

B. Dip 3 in. (76 mm) paint brush attached to Toro Part No. 29-9200 Handle Assembly into lapping compound. Stand clear and instruct operator to engage reel into backlap mode.

C. Apply lapping compound evenly over full length of the reel, assuring that all reel blades are covered. Whenever noise of reel against the bedknife begins to disappear or, an uneven concentration of material appears on the reel, redistribute the compound with the brush.

D. When it becomes necessary to adjust the reel to the bedknife, instruct the operator to disengage the reel, stop the engine and remove the key from the ignition switch. Then proceed with the adjustment only after the reels have stopped rotating.

E. Backlap each reel until the cutting edges are sharp, even, and consistent on all blades. Achieve a minimum of 1/32 in. (0.79 mm) land area on newly sharpened reel assemblies. Normally, a reel need only be backlapped for approximately 3 minutes.

F. Upon completion, stop the reel and turn off the engine. Remove the key from the ignition switch. Wash the unit thoroughly with a low pressure stream of water to remove all lapping material. Allow the reel to dry and lubricate the grease fittings.

G. Check sharpness of the reel and bedknife with strips of newspaper. With light reel to bedknife contact, the paper should be cleanly sheared across the entire width of the reel. If the paper is not sheared acceptably, continue backlapping.

H. After backlapping the #1, #2 and #3 cutting units, raise and latch these units and proceed with the #4 and #5 cutting units.

Note: See the Toro Sharpening Manual (Part #80-300) for additional backlapping/sharpening information.

SERVICING THE BEDKNIFE/BEDBAR ASSEMBLY

Note: The bedbar on each 450-D cutting unit has a precision ground mounting surface to provide an excellent fit with a bedknife. Backlapping of replacement bedknives is often sufficient to achieve an excellent cutting edge with minimum material removed.

BEDKNIFE/BEDBAR REMOVAL:

1. Remove the shoulder bolts, bushings and spacers from each end of the unit and remove the bedbar/bedknife assembly (Fig. 23).

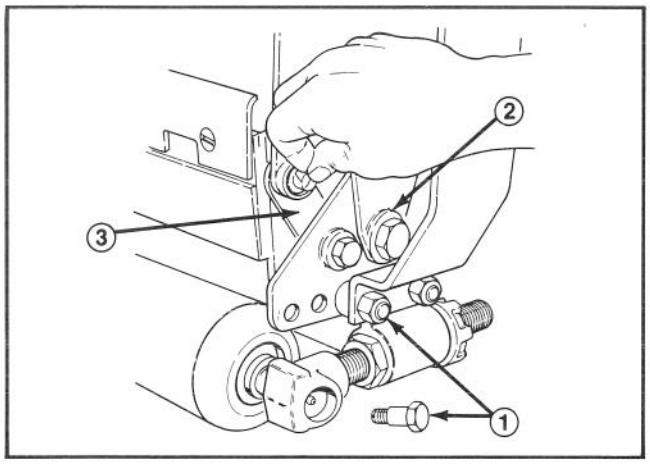

Figure 23

1. Shoulder bolts (2 each side) 2. Bushing 3. Spacer

2. Remove the mounting screws for the bedknife and separate the bedknife from the bar (Fig. 24). Discard the screws.

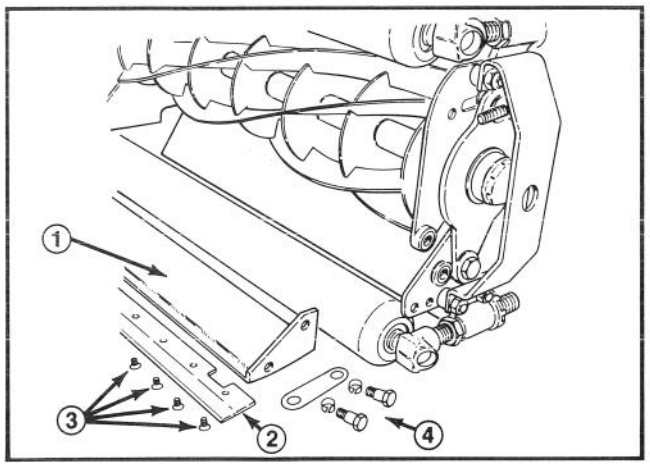

Figure 24

1. Bedbar 3. Bedknife mounting screws
2. Bedknife 4. Bedbar mounting components

ASSEMBLY:

1. Thoroughly clean the bedknife mounting face on the bedbar of all rust and scale. Remove any material on the mounting face of the bedbar that will affect a good match-up with the bedknife.

2. Before installation, apply a coating of "Never Seez", or any material that will ease future disassembly of the bedknife mounting screws, to the threads before installation.

3. Use a torque wrench and Part No. 51-0880 special tool to finish tightening the screws (Fig. 25). Torque the screws to 250 in.-lb (28 Kgm) beginning with the center screw and tightening alternate screws toward each end to insure the bedknife will be flat against the bedbar.

4. Install the bedbar/bedknife assembly to the cutting unit.

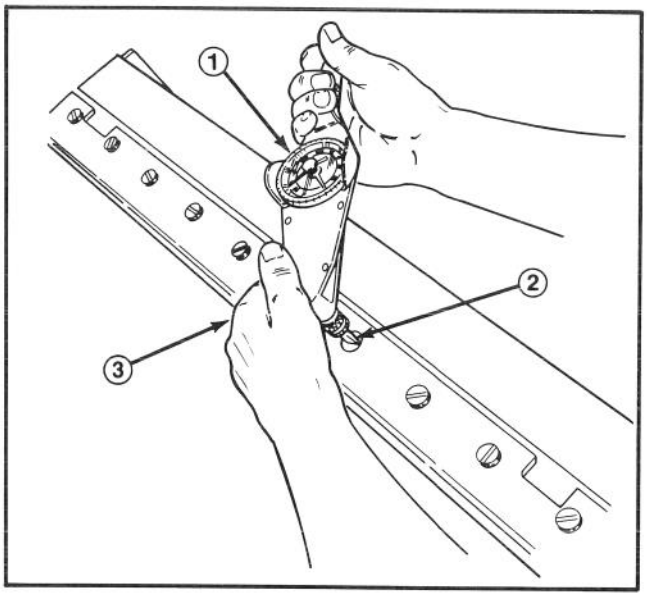

Figure 25

1. Torque wrench
2. Part No. 51-0880 Tool
3. Torque from the center out

SERVICING THE REEL ASSEMBLY

DISASSEMBLY:

1. Remove the guards from each end of the cutting unit and the front and rear roller assemblies (Fig. 26).

2. Remove the shoulder bolts, bushings and spacers from each end of the unit and remove the bedbar/bedknife assembly (Fig. 27).

3. Disassemble the stainless steel shim, belleville washer and locknut from the adjuster pin, the fasteners for the bracket and remove the adjusting handle assembly from the sideplate (Fig. 27).

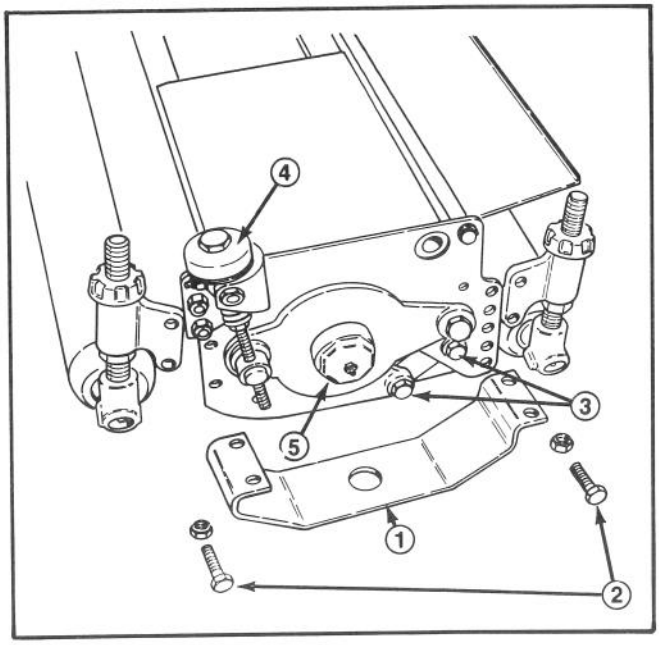

Figure 26

1. Guard
2. Mounting fasteners
3. Bedbar mounting assembly
4. Adjusting handle assembly
5. Dust cap

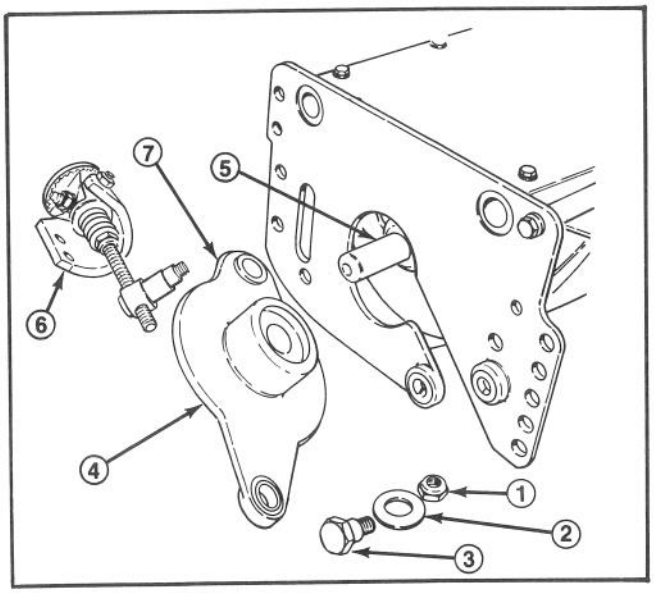

Figure 27

1. Locknut
2. Belleville washer
3. Shoulder bolt
4. Bearing housing
5. Reel shaft
6. Adjustment handle assembly
7. Flange bushings

4. Disassemble the cone nut from the shoulder bolt securing the bearing housing to the sideplate, remove the belleville washer and bolt and slide the bearing housing off the reel shaft (Fig. 27).

5. Disassemble the cover from the drive housing and remove the drive belt from the housing (Fig. 28).

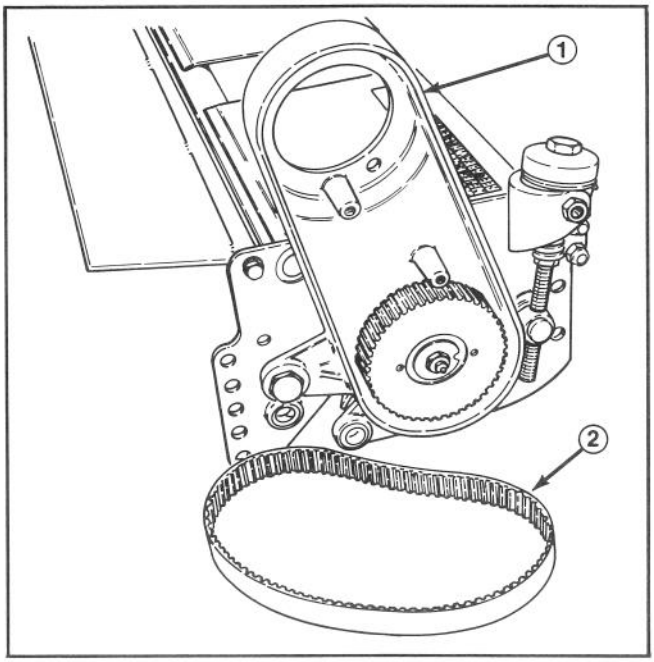

Figure 28

1. Drive housing (cover removed)
2. Drive belt

6. Remove the reel capscrew, toothed washer and pulley washer from the reel shaft (Fig. 29). (Note: Capscrew is assembled with a thread locking compound).

7. Using a puller, remove the driven pulley from the reel shaft (Fig. 29). Remove the woodruff key from the reel shaft.

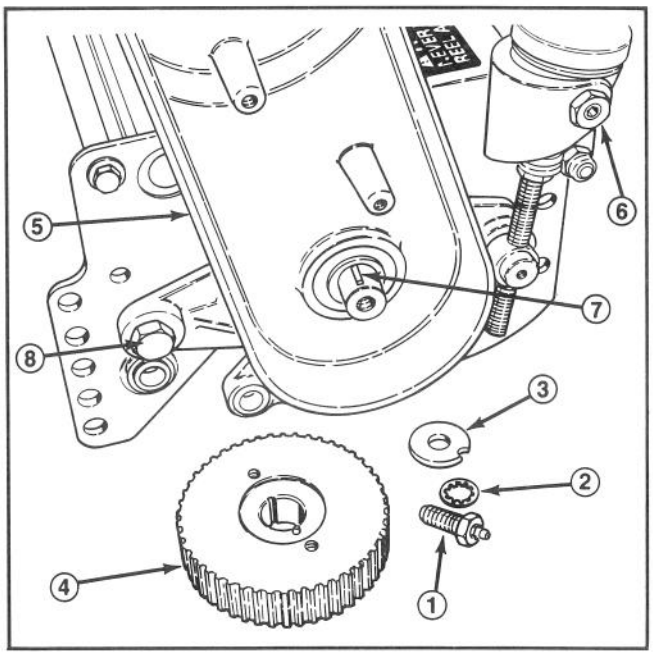

Figure 29

1. Reel capscrew
2. Toothed washer
3. Pulley washer
4. Driven pulley
5. Drive housing
6. Adjustment handle assembly
7. Woodruff key
8. Drive housing fasteners

8. Remove the adjustment handle assembly and cone nut, belleville washer and shoulder bolt securing the housing to the sideplate (Fig. 29). Remove the housing.

9. Slide the reel assembly out of the slots in the sideplates.

10. To remove the bearing and seals from the drive housing, remove the retaining ring from inside the housing. Pry the outer seal out of the belt drive case side. Press the bearing and rear seal out from the outerside of the housing.

11. To remove the bearing and seal from the bearing housing, remove the dust cap (Fig. 26) and press the bearing and seal out of the housing.

ASSEMBLY:

1. Inspect the flange bushings in the mounting holes for the drive housing and bearing housing for wear (Fig. 27). Replace, if necessary.

2. Assemble the outer seal (lip facing in to retain grease) into the drive housing using Loctite 242 retaining compound on the outer diameter. Apply a light coat of oil to the seal lips and insert the bearing assembly through the seal from the opposite side (Fig. 30).

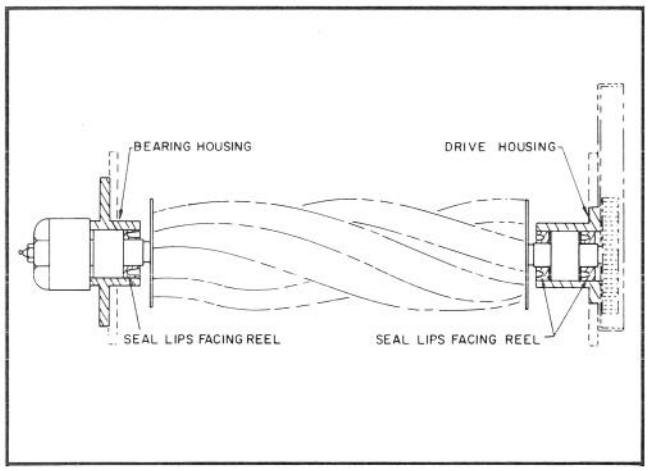

Figure 30

3. Apply a light coating of oil to the inner seal lips and install (lip facing away from the bearing and toward the reel) in the housing. Install the retaining ring to secure the assembly in the housing (Fig. 30).

4. Apply a light coat of oil to the seal lips of the seal for the bearing housing and install (lip facing away from the bearing) over the bearing assembly (Fig. 30).

5. Insert the bearing and seal in the housing and install the dust cap into the housing.

6. Assemble the reel assembly to the frame. Ensure the shield washer is installed on the drive housing end of the reel shaft. Align drive pin on reel shaft with slot in bearing and slide the drive housing onto the shaft.

7. Insert the shoulder bolt through the Belleville washer and rear housing mounting hole. Slide the bolt through the sideplate mounting hole (Fig. 27). Install the cone nut locknut onto the bolt. Tighten the cone nut to 45 - 55 ft.-lbs.

8. Align the drive pin on the reel shaft with the notch in the bearing inner race and slide the bearing housing over the opposite end of the reel shaft. Insert the shoulder bolt and belleville washer through the rear bearing housing mounting hole. Slide the bolt through the sideplate mounting hole. Install the cone onto the bolt. Tighten the cone nut to 45 - 55 ft.-lbs.

9. Install the woodruff key in the drive housing end of the reel shaft and install the driven pulley onto the shaft.

10. Ensure the slot in the pulley washer is aligned with the roll pin in the pulley and install the washer, toothed washer and reel capscrew (Fig. 28). Apply a medium strength thread locking compound to the reel capscrew during assembly. Torque the capscrew to 45 - 55 ft.-lbs.

11. Install the reel adjustment handle assemblies to each sideplate. Install roll pins before tightening fasteners.

12. Install the bedbar/bedknife assembly.

13. Install the front and rear roller assemblies or skids.

14. To adjust the reel to the bedknife; refer to Reel to Bedknife Adjustment. To adjust the height-of-cut; refer to Height-of-Cut Adjustment section.

REMOVING THE ROLLER

The roller assemblies can be removed by the following methods:

1. Remove the fasteners securing the guard and roller adjustment housing to the side plate (Fig. 31) or loosen the cone nuts on the threaded adjustment rod, unscrew the adjustment knob and drop the threaded rod out of the adjustment housing (Fig. 32).

2. The threaded rod and collar assembly can be removed from the roller by sliding it off the shaft at both ends (Fig. 32).

MAINTENANCE

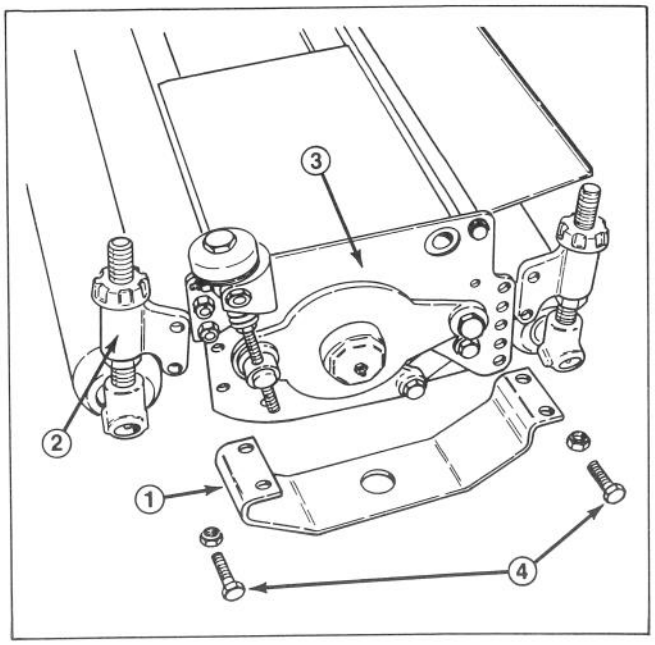

Figure 31

1. *Guard*
2. *Roller adjustment housing*
3. *Sideplate*
4. *Mounting fasteners*

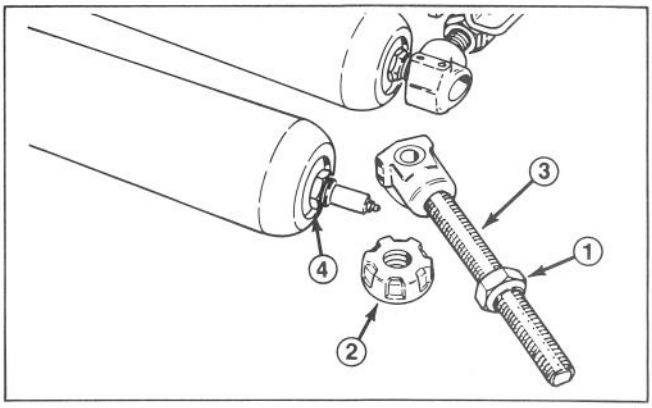

Figure 32

1. *Cone nut*
2. *Adjusting knob*
3. *Rod and collar assembly*
4. *Flex lock nut*

INSTALLING THE ROLLER

IMPORTANT: When assembling a new roller to the cutting unit mount the roller so that the roller shaft "flex lock nut" is on the right side of the cutting unit (Fig. 32). (As viewed by the operator sitting on seat of machine). This prevents the lock nut from loosening during operation.

IDENTIFICATION AND ORDERING

MODEL AND SERIAL NUMBERS

Two identification numbers are stamped on a plate installed on each cutting unit, a model number and serial number. The identification plate is located on the reel sideplate end opposite the drive housing end (Fig. 33). In any correspondence concerning the cutting unit, supply the model and serial numbers to assure correct information and replacement parts are obtained.

To order replacement parts from an Authorized TORO Distributor, supply the following information:

1. Model and serial numbers of the cutting unit.

2. Part number, description and quantity of parts desired.

Note: If a parts catalog is being used, use the part number for ordering parts, not the reference number.

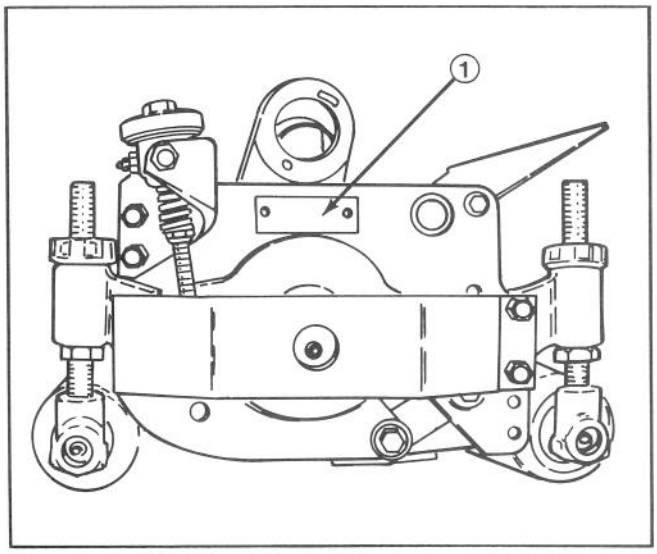

Figure 33

1. *Model and serial number*

MAINTENANCE RECORD

Date	Hours Used	Sharpen Reels	Lubrication	Sharpen or Replace Bed Knife	Winter Storage	Remarks

MAINTENANCE RECORD

Date	Hours Used	Sharpen Reels	Lubrication	Sharpen or Replace Bed Knife	Winter Storage	Remarks

The Toro Promise

A ONE YEAR LIMITED WARRANTY

The Toro Company promises to repair your TORO Product if defective in materials or workmanship. The following time periods from the date of purchase apply:

Commercial Products ..... 1 Year

The costs of parts and labor are included, but the customer pays the transportation costs on walk rotary mowers with cutting unit widths of less than 25".

If you feel your TORO product is defective and wish to rely on The Toro Promise, the following procedure is recommended:

1. Contact your Authorized TORO Distributor or Commercial Dealer (the Yellow Pages of your telephone directory is a good reference source).
2. The TORO Distributor or Commercial Dealer will advise you on the arrangements that can be made to inspect and repair your product.
3. The TORO Distributor or Commercial Dealer will inspect the product and advise you whether the product is defective and, if so, make all repairs necessary to correct the defect without an extra charge to you.

If for any reason you are dissatisfied with the distributor's analysis of the defect or the service performed, you may contact us.

Write:

TORO Commercial Products Service Department
8111 Lyndale Avenue South
Minneapolis, Minnesota 55420

The above remedy of product defects through repair by an Authorized TORO Distributor or Commercial Dealer is the purchaser's sole remedy for any defect.

THERE IS NO OTHER EXPRESS WARRANTY. ALL IMPLIED WARRANTIES OF MERCHANTABILITY AND FITNESS FOR USE ARE LIMITED TO THE DURATION OF THE EXPRESS WARRANTY.

Some states do not allow limitations on how long an implied warranty lasts, so the above limitation may not apply to you.

This Warranty applies only to parts or components which are defective and does not cover repairs necessary due to normal wear, misuse, accidents, or lack of proper maintenance. Regular, routine maintenance of the unit to keep it in proper condition is the responsibility of the owner.

All warranty repairs reimbursable under the Toro Promise must be performed by an Authorized TORO Commercial Dealer or Distributor using Toro approved replacement parts.

Repairs or attempted repairs by anyone other than an Authorized TORO Distributor or Commercial Dealer are not reimbursable under the Toro Promise. In addition, these unauthorized repair attempts may result in additional malfunctions, the correction of which is not covered by warranty.

THE TORO COMPANY IS NOT LIABLE FOR INDIRECT, INCIDENTAL OR CONSEQUENTIAL DAMAGES IN CONNECTION WITH THE USE OF THE PRODUCT INCLUDING ANY COST OR EXPENSE OF PROVIDING SUBSTITUTE EQUIPMENT OR SERVICE DURING PERIODS OF MALFUNCTION OR NON-USE.

Some states do not allow the exclusion or limitation of incidental or consequential damages, so the above limitation or exclusion may not apply to you.

This warranty gives you specific legal rights, and you may also have other rights which vary from state to state.

COUNTRIES OTHER THAN THE UNITED STATES OR CANADA

Customers who have purchased TORO products exported from the United States or Canada should contact their TORO Distributor (Dealer) to obtain guarantee policies for your country, province or state. If for any reason you are dissatisfied with your Distributor's service or have difficulty obtaining guarantee information, contact the TORO importer. If all other remedies fail, you may contact us at The Toro Company.

Compliance with Radio Interference Regulations Certified.
Certifie Conforme au Reglement sur le Brouillage Radioelectrique.

Litho in U.S.A.