Form No. 3366-955 Rev C

Road Light Kit

North American Groundsmaster 360 Multi-Purpose Machine with Cab

Model No. 30517

Installation Instructions

Installation

Loose Parts

Use the chart below to verify that all parts have been shipped.

Procedure	Description	Qty.	Use
1	No parts required	–	Initial Preparation
2	No parts required	–	Floor plate access hole
3	Column bracket assembly Column bracket mount Carriage screw, 3/8 inch x 1 inch Flange nut, 3/8 inch Column cover Screw	1 1 2 2 1 2	Install the switch column assembly
4	Dual rate flasher Flange head screw, #10 x 3/4 inch Flange nut, #10	1 2 2	Install the dual rate flasher
5	Head light Washer, .344 inch I.D. Flange locknut, 5/16 inch	2 2 2	Install the head lights
6	Warning light—front Grommet Warning light—rear Screw, #10 x 1 inch Flange lock nut, #10 Bullet connector	2 2 2 4 4 8	Install the warning lights
7	Wire harness Grommet Cable tie, 7–1/4 inch (184 mm) Cable tie, 14–1/2 inch (368 mm)	1 1 13 2	Install the wire harness
8	No parts required	–	Final Procedures

Media and Additional Parts

Description	Qty.	Use
Installation instructions	1	Use to install kit
Parts catalog	1	Use to reference part numbers

© 2011—The Toro® Company
8111 Lyndale Avenue South
Bloomington, MN 55420

Register at www.Toro.com.

Original Instructions (EN)
Printed in the USA.
All Rights Reserved

1

Initial Preparation

No Parts Required

Procedure

1. Park the machine on a level surface, stop the engine, engage the parking brake and remove the key from the ignition switch.
2. Disconnect the negative (–) battery cable from the battery.

⚠ WARNING

Wear safety goggles and rubber gloves when working with batteries. Since the gases are explosive, keep open flames and electrical spark away from batteries. Do not smoke.

3. Press the steering tower foot pedal down and pivot the tower forward as far as possible. Release the pedal to lock the tower in the forward position.
4. Move the seat latch, located on the left side of the seat, rearward to unlatch the seat and pull forward on the top of the seat (Figure 1).

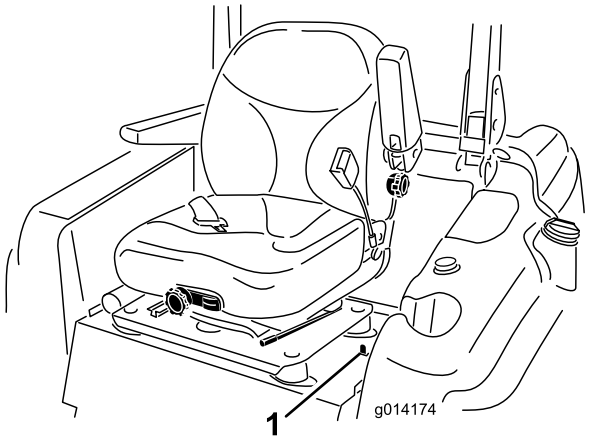

Figure 1

1. Seat latch

5. Raise and secure the hood as follows:
   - Release the hood latches.
   - Lift up on the hood until the prop rod can be positioned behind the frame tube (Figure 2).

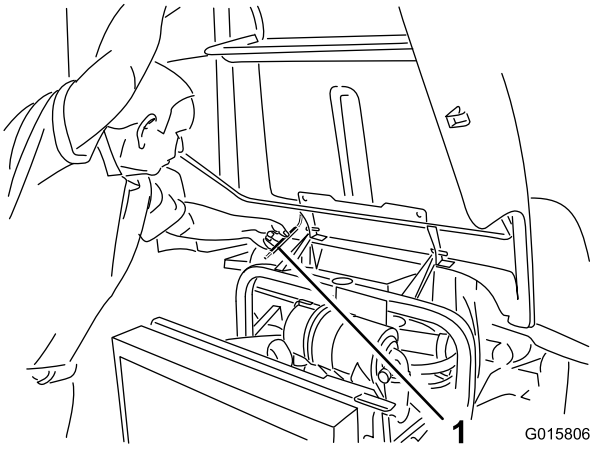

Figure 2

1. Prop rod

   - Lower the hood until the rod is in front of and resting against the frame tube.

2

Floor Plate Access Hole

No Parts Required

Procedure

1. Remove the knockout plug, located between the brake pedal and the steering column in the floor plate (Figure 3). If the floor plate does not have a knock out plug, proceed to the next step for drilling instructions.

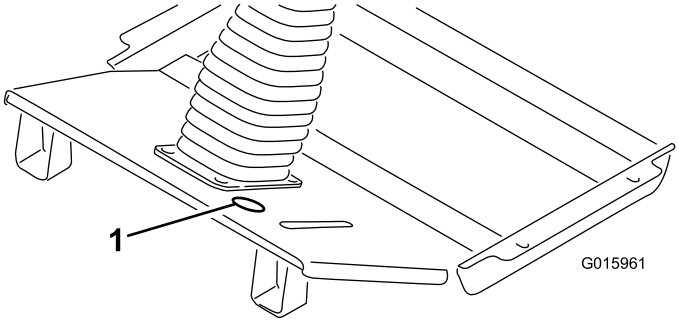

Figure 3

1. Knockout plug location

2. Using the dimensions shown in Figure 4, locate, mark and drill a 2 inch (51 mm) diameter hole in the floor plate.

   Note: Make sure is there is nothing under the floor plate to interfere with the drilling.

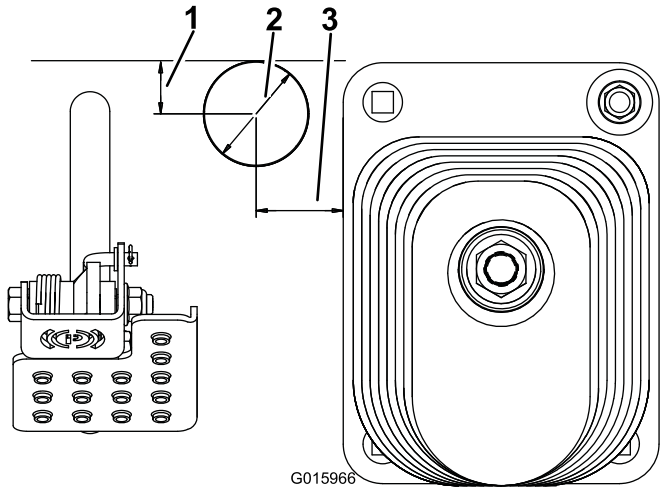

Figure 4

1. 1 inch (51 mm)
2. 2 inch diameter (51 mm)
3. 1–5/8 inches (41 mm)

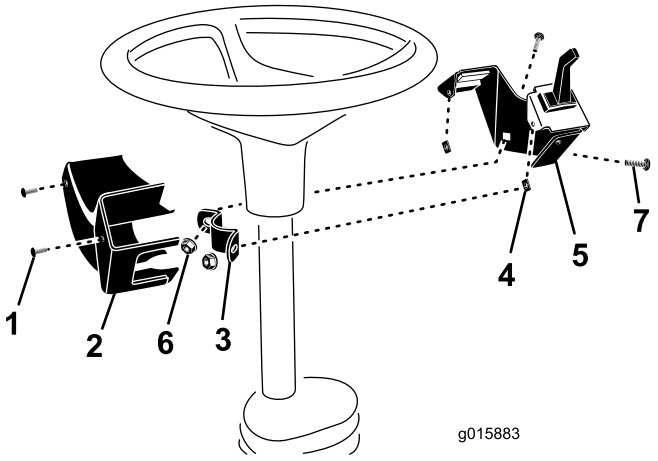

Figure 5

1. Screw (2)
2. Column cover
3. Column bracket mount
4. Speed nut (2)
5. Column bracket
6. Flange nut
7. Carriage screw

3

Installing the Switch Column Assembly

Parts needed for this procedure:

1	Column bracket assembly
1	Column bracket mount
2	Carriage screw, 3/8 inch x 1 inch
2	Flange nut, 3/8 inch
1	Column cover
2	Screw

Procedure

1. Mount the column bracket assembly to the steering column with the column bracket mount, (2) 3/8 inch x 1 inch carriage screws and 3/8 inch flange nuts. Position the column bracket as high as possible on the steering column as shown in Figure 5. Make sure the column bracket does not interfere with the steering wheel.

   Note: Over tightening the carriage screws/flange nuts may distort the column bracket prohibiting the cover from being installed.

2. After the wire harness is connected to the switches, mount the column cover to the column bracket speed nuts with two screws (Figure 5).

4

Installing the Dual Rate Flasher

Parts needed for this procedure:

1	Dual rate flasher
2	Flange head screw, #10 x 3/4 inch
2	Flange nut, #10

Procedure

1. Position the dual rate flasher under the seat plate while aligning it with the mounting holes in the plate (Figure 6).

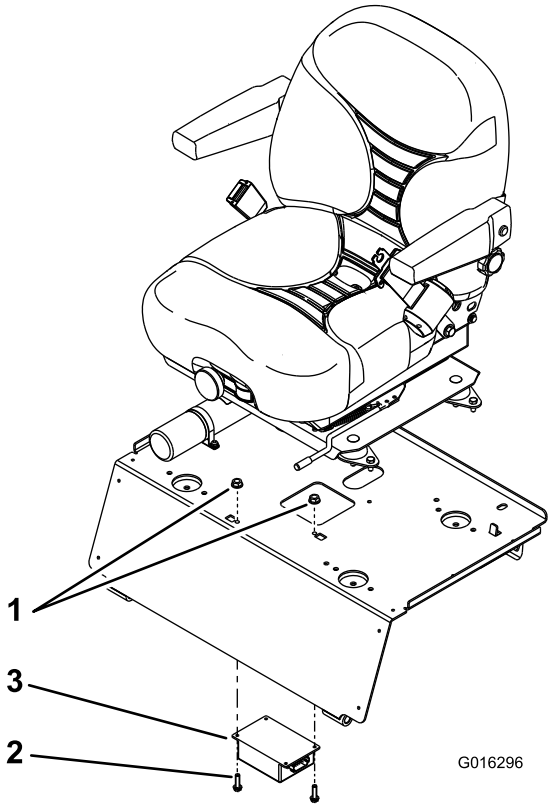

Figure 6

1. Flange nut
2. Flange head screw
3. Dual rate flasher

2. Secure the dual rate flasher to the seat plate with (2) #10 x 3/4 inch flange head screws and flange nuts (Figure 6).

5

Installing the Head Lights

Parts needed for this procedure:

2	Head light
2	Washer, .344 inch I.D.
2	Flange locknut, 5/16 inch

Procedure

Secure a work light to each headlight bracket with a .344 inch I.D. washer and 5/16 inch flange locknut. Discard the bolts, lock washers and nuts included with the lights (Figure 7).

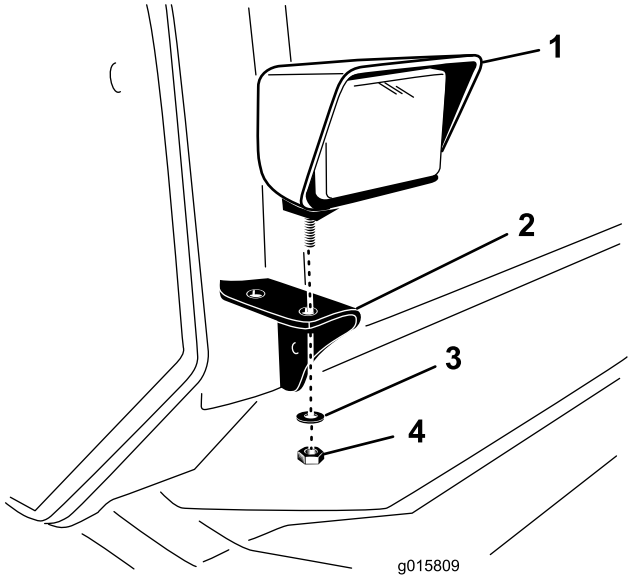

Figure 7

1. Headlight
2. Headlight bracket
3. Washer
4. Flange lock nut

6

Installing the Warning Lights

Parts needed for this procedure:

2	Warning light—front
2	Grommet
2	Warning light—rear
4	Screw, #10 x 1 inch
4	Flange lock nut, #10
8	Bullet connector

Accessing the Cab Roof

Remove the (4) nuts, washers and bushings securing the cab roof to the headliner (Figure 8). Also, remove the small fastener securing the front edge of the roof to the headliner. Carefully prop up the roof to gain access to the inside of the headliner.

Note: Do not disconnect the air conditioning refrigerant lines.

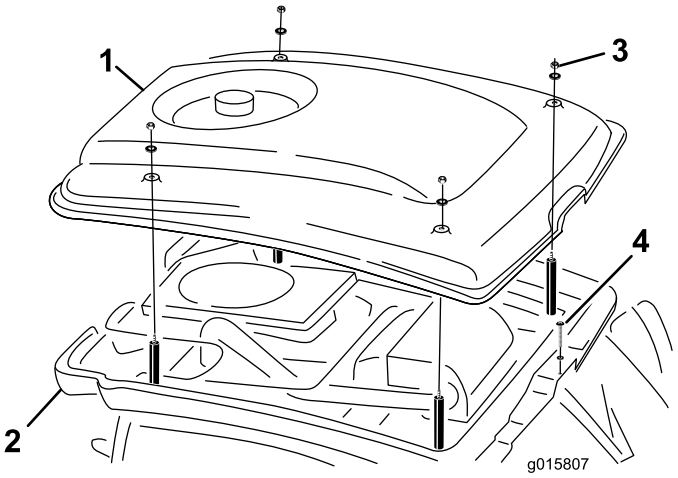

Figure 8

1. Roof
2. Headliner
3. Nut, washer and bushing
4. Smaller fastener

Front warning lights

1. Cut out the template on page 11.
2. On the front of the cab headliner, use the template (Figure 9) to locate and mark the two mounting holes for the warning lights (Figure 9).

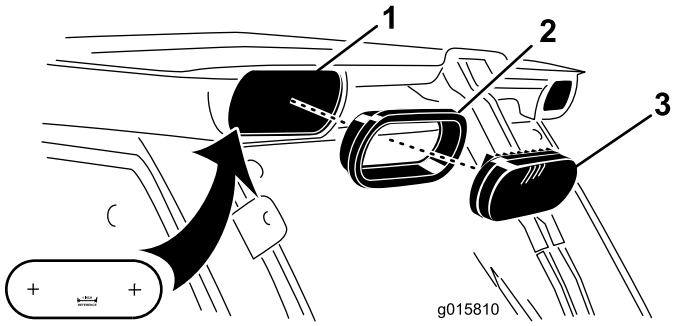

Figure 9

1. Template
2. Gasket
3. Warning light

3. Carefully cut out each hole in the headliner. Remove all rough edges.

   Important: Make sure the wiring inside the headliner is away from the area being cut.

4. Insert a gasket and warning light into each hole in the headliner (Figure 9).
5. Locate the wire harness connectors in the headliner and plug them into the lights.

Rear warning lights

1. Cut out the template on page 13.
2. On the rear of the cab headliner, use the template (Figure 10) to locate and mark the (3) mounting holes for each warning light (Figure 10).

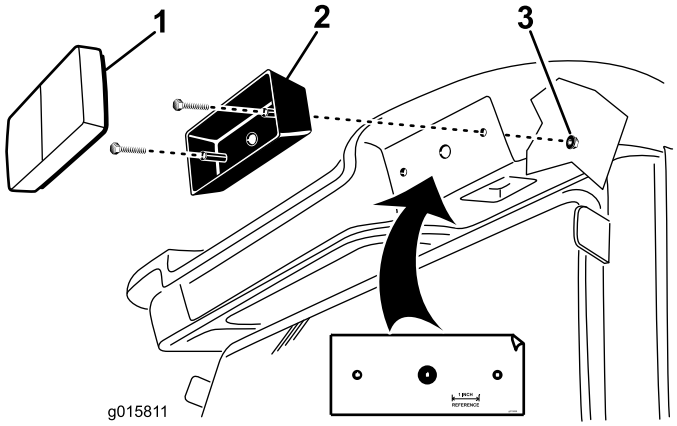

Figure 10

1. Warning light lens
2. Warning light body
3. Template

3. Carefully drill out the holes in the headliner. Remove all rough edges.

   Important: Make sure the wiring inside the headliner is away from the drilling area.

4. Make a mark on the amber end (single filament bulb) of each warning light body.
5. Remove the screws securing the lens to each warning light body. Remove the lens from the body.
6. Mount a warning light body to each location, on the headliner, with (2) #10 x 1 inch screws and #10 flange nuts (Figure 10).

   Note: Make sure the lights are positioned so the amber ends (single filament bulbs) are toward the outside of the machine.

7. Locate the wire ends of the headliner harness and route them through the grommets in the back of the light bodies.
8. Crimp a bullet connector onto each end of the wire ends (4 per side).
9. Plug the bullet connectors into the appropriate light terminals, positioning as shown in Figure 11 and Figure 12.

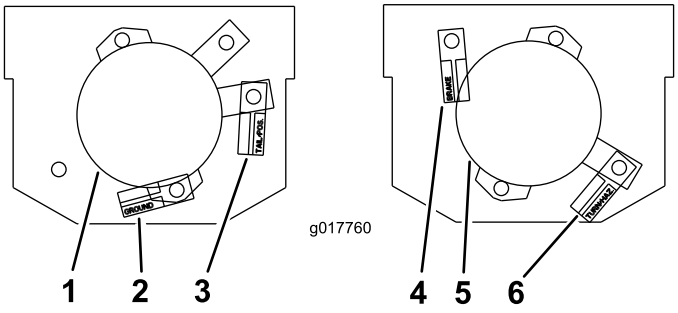

Figure 11
Right Side

1. Light bulb w/double filament
2. Black wire here
3. Violet wire here
4. Gray wire here
5. Light bulb w/single filament
6. Blue wire here

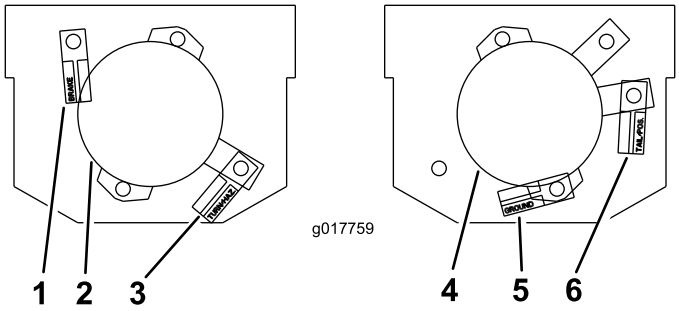

Figure 12
Left Side

1. Orange wire here
2. Light bulb w/single filament
3. Brown wire here
4. Light bulb w/double filament
5. Black wire here
6. Violet wire here

10. Install a lens to each warning light. Make sure the amber lens on each light is toward the outside of the machine.
11. Install the cab roof to the headliner with the fasteners previously removed.

Important: Brake light function not used.

7

Installing the Wire Harness

Parts needed for this procedure:

1	Wire harness
1	Grommet
13	Cable tie, 7–1/4 inch (184 mm)
2	Cable tie, 14–1/2 inch (368 mm)

Procedure

Route, connect and secure the wire harness as follows:

- Starting at the front of the machine and under the floor plate, route the end of the harness with the (2) connectors up through the knockout in the floor plate and up the steering column to the turn signal and head light switches. Plug the harness connectors to the appropriate switches.

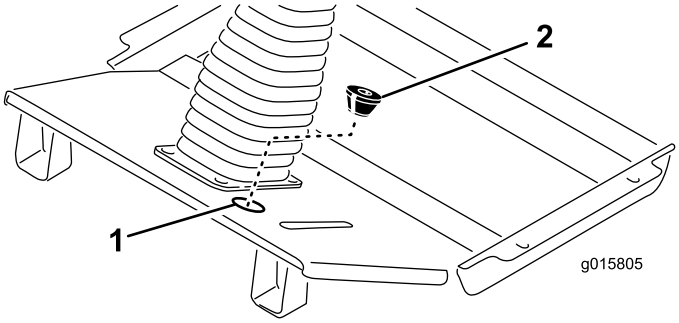

Figure 13

1. Knockout plug hole
2. Grommet

- Cut a slit in the supplied grommet and cut out the bottom opening. With the cone end of the grommet facing down, wrap it around the harness and insert it into the knockout hole in the platform (Figure 13).
- Route the left and right head light harness connectors along the front of the platform to each head light (Figure 14).
- Plug the harness connectors into the head lights and the harness clips into the holes in the head light brackets (Figure 14).
- Cable tie the harness to the holes in the frame gussets.

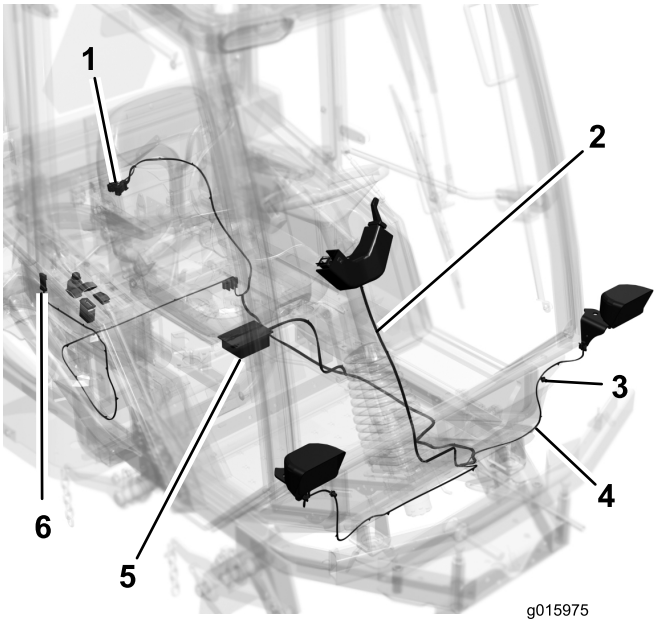

Figure 14

1. Cab connection
2. Switch connection
3. Head light connections
4. Harness clip
5. Dual rate flasher connection
6. Accessory connection

- Route the harness along the existing wire harness and under the platform to the dual rate flasher. Cable tie the harness to the existing harness near each harness clip. Plug the connector into the dual rate flasher.
- Following the existing harness, route the harness along the underside of the seat support bracket to the control panel on the right side of the machine.
- Remove the (5) screws securing the control panel to the tank cover.
- Raise the control panel and locate the wire harness connector labeled **accessory.**
- Route the harness connector up to the accessory connector and plug it in.
- Install the control panel to the tank cover with the screws removed. Torque the screws to 25 in-lbs (2.8 N-m). **Do not over tighten the screws.**

  Following the existing harness, route the harness along the underside of the seat support bracket to the rear of the cab. Connect the harness to the cab as follows:

  – At the rear of the cab, unplug the cab wire harness from the traction unit wire harness (8 pin connectors) (Figure 15).

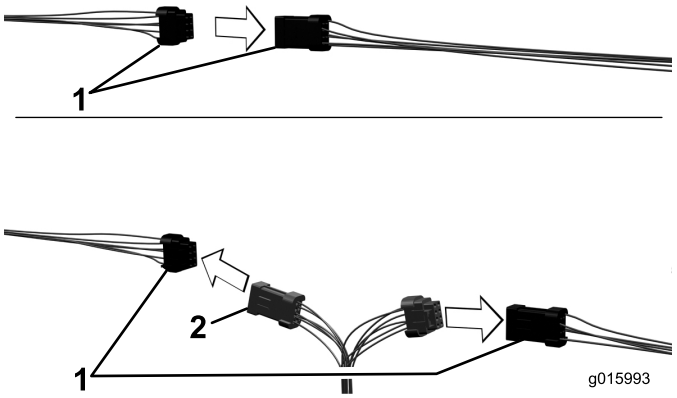

Figure 15

1. Cab harness and traction unit harness
2. Light kit harness

  – Plug the light kit wire harness into the cab and traction unit wire harnesses (Figure 15).

Important: Make sure the harness is clear of all hot, sharp or moving components.

8

Final Procedures

No Parts Required

Procedure

1. Pull up on the seat latch release bar and lower the seat into the locked position.
2. Attach the negative battery cable to the battery post.
3. Raise the hood until the prop rod can be raised above the frame tube, then lower the hood. Secure the hood latches.

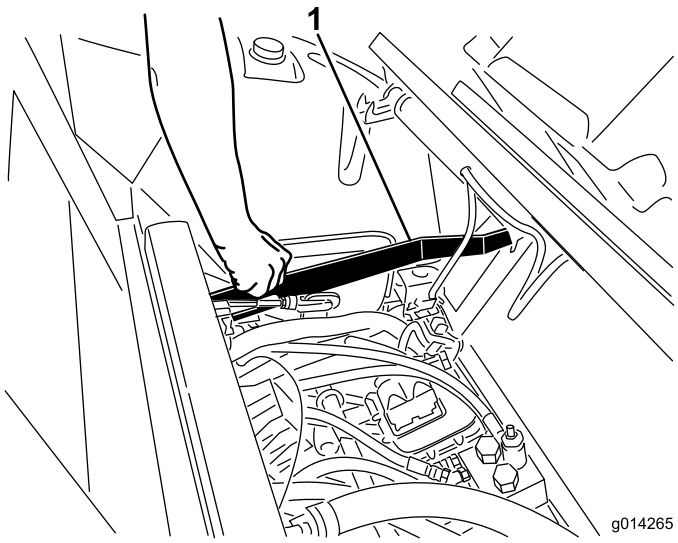

Figure 16

1. Seat latch release bar

Operation

The Road Light Kit consists of 2 front mounted head lamps, 2 front warning lights and 2 rear warning lights.

Light Switch

Press the far side of the light switch (Figure 17) to activate the front head lights and the rear lights.

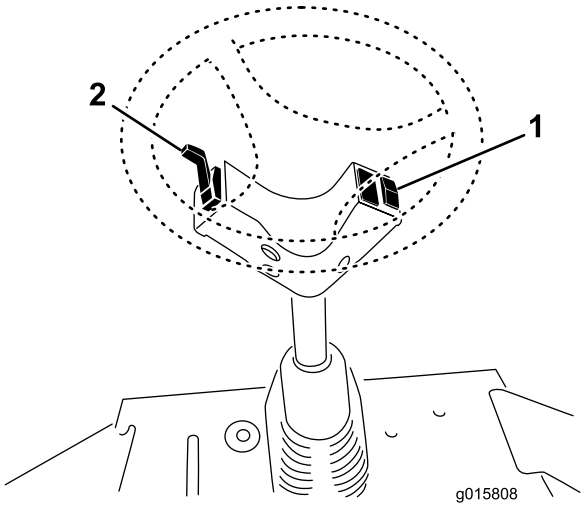

Figure 17

1. Light switch
2. Turn signal

Turn Signal

Press down on the turn signal arm (Figure 17) to activate the left turn signal.

Press up on the turn signal arm (Figure 17) to activate the right turn signal.

If turning LEFT:

The left combination warning/turn/tail lamp will illuminate as follows:

- Amber lamp will flash.
- The low intensity red tail lamp will be on steady.
- The high intensity red tail lamp will be high rate flash.

The right combination warning/turn/tail lamp will illuminate as follows:

- Amber lamp will be on steady.
- The red tail lamp will be on steady (both high and low intensity).

If turning RIGHT:

The right combination warning/turn/tail lamp will illuminate as follows:

- Amber lamp will flash.
- The low intensity red tail lamp will be on steady.
- The high intensity red tail lamp will be high rate flash.

The left combination warning/turn/tail lamp will illuminate as follows:

- Amber Lamp will be on steady.
- The red tail lamp will be on steady (both high and low intensity).

Aiming the Headlights

1. Loosen the mounting nuts and position each headlight so that it points straight ahead. Tighten the mounting nut just enough to hold the headlight in position.
2. Place a flat piece of sheet metal over the face of the headlight.
3. Mount a magnetic protractor onto the plate. While holding the assembly in place, carefully tilt the headlight downward 3 degrees, then tighten the nut.
4. Repeat the procedure on the other headlight.

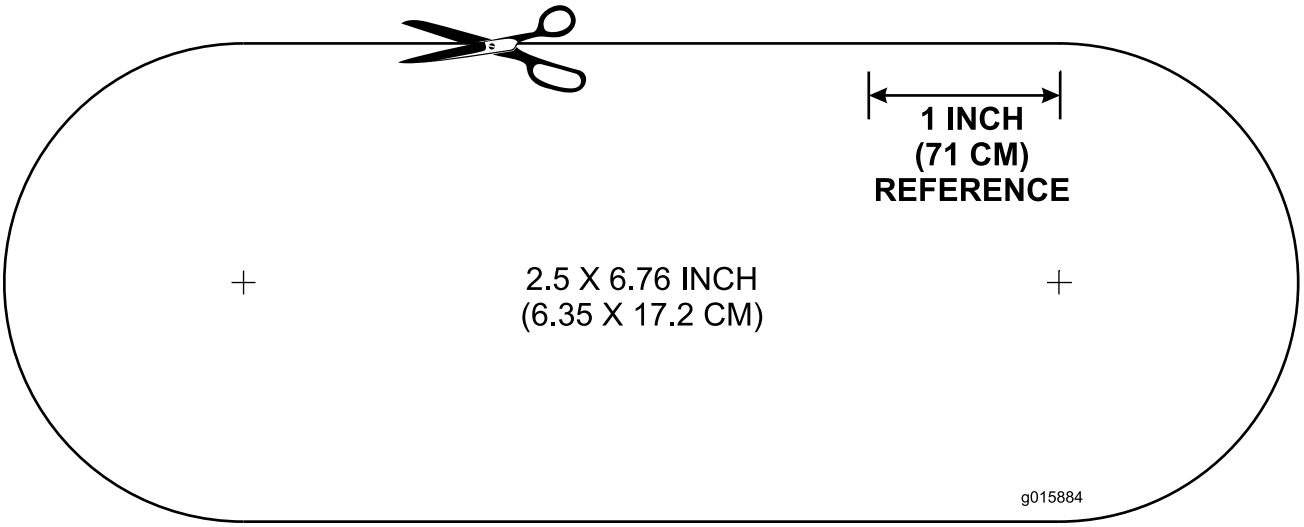
1 INCH
(71 CM)
REFERENCE
2.5 X 6.76 INCH
(6.35 X 17.2 CM)
g015884

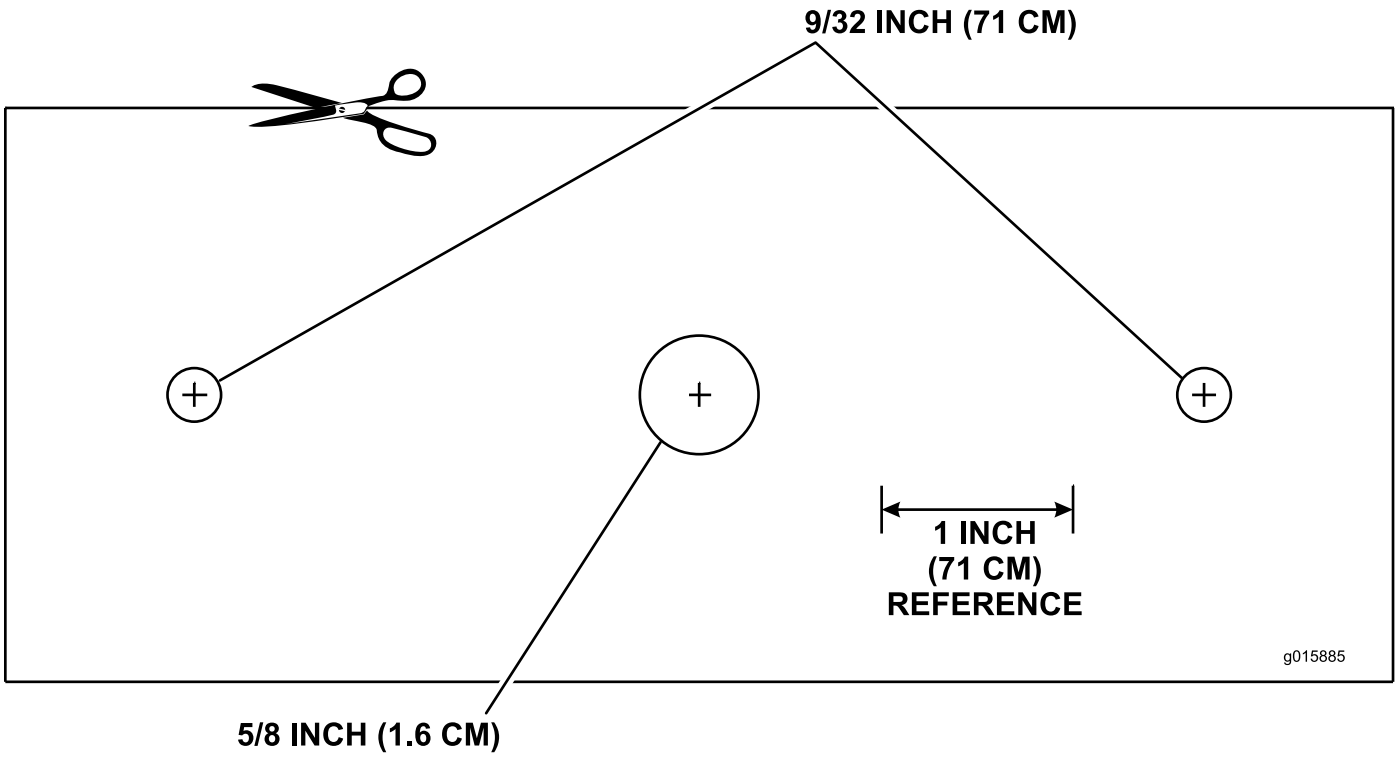
9/32 INCH (71 CM)
1 INCH
(71 CM)
REFERENCE
g015885
5/8 INCH (1.6 CM)

Notes:

Notes:



Count on it.