Form No. 3372-543 Rev A

12in Cordless Trimmer

Model No. 51484—Serial No. 312000001 and Up

Operator's Manual

Register at www.Toro.com

If you have questions or problems, contact us at www.Toro.com or call toll free 1-800-237-2654 (US) or 1-800-248-3258 (Canada) before returning this product.

General Safety Rules

WARNING: When using electric gardening appliances, basic safety precautions should always be followed to reduce the risk of fire, electric shock, and personal injury, including the following:

Read all instructions.

The term "power tool" in all of the warnings refers to your mains-operated (corded) power tool or battery-operated (cordless) power tool.

1. **Work area safety**
   - A. **Keep work area clean and well lit.** *Cluttered or dark areas invite accidents.*
   - B. **Do not operate power tools in explosive atmospheres, such as in the presence of flammable liquids, gases or dust.** *Power tools create sparks which may ignite the dust or fumes.*
   - C. **Keep children and bystanders away while operating a power tool.** *Distractions can cause you to lose control.*
2. **Electrical safety**
   - A. **Power tool plugs must match the outlet. Never modify the plug in any way. Do not use any adapter plugs with earthed (grounded) power tools**. *Unmodified plugs and matching outlets will reduce risk of electric shock.*
   - B. **Avoid body contact with earthed or grounded surfaces such as pipes, radiators, ranges and refrigerators.** *There is an increased risk of electric shock if your body is earthed or grounded.*
   - C. **Do not expose power tools to rain or wet conditions.** *Water entering a power tool will increase the risk of electric shock.*
   - D. **Do not abuse the cord. Never use the cord for carrying, pulling or unplugging the power tool. Keep cord away from heat, oil, sharp edges or moving parts**. *Damaged or entangled cords increase the risk of electric shock.*
   - E. **When operating a power tool outdoors, use an extension cord suitable for outdoor use.** *Use of a cord suitable for outdoor use reduces the risk of electric shock.*
   - F. **If operating a power tool in a damp location is unavoidable, use a residual current device (RCD) protected supply.** *Use of an RCD reduces the risk of electric shock.*
3. **Personal safety**
   - A. **Stay alert; watch what you are doing and use common sense when operating a power tool. Do not use a power tool while you are tired or under the influence of drugs, alcohol or medication.** *A moment of inattention while operating power tools may result in serious personal injury.*
   - B. **Use personal protective equipment. Always wear eye protection.** *Protective equipment such as dust mask, non-skid safety shoes, hard hat, or hearing protection used for appropriate conditions will reduce personal injuries.*
   - C. **Prevent unintentional starting. Ensure the switch is in the off-position before connecting to power source and/or battery pack, picking up or carrying the tool.** *Carrying power tools with your finger on the switch or energizing power tools that have the switch on invites accidents.*
   - D. **Remove any adjusting key or wrench before turning the power tool on.** *A wrench or a key left attached to a rotating part of the power tool may result in personal injury.*
   - E. **Do not overreach. Keep proper footing and balance at all times.** *This enables better control of the power tool in unexpected situations.*
   - F. **Dress properly. Do not wear loose clothing or jewelry. Keep your hair, clothing and gloves away from moving parts.** *Loose clothes, jewelry, or long hair can be caught in moving parts.*
   - G. **If devices are provided for the connection of dust extraction and collection facilities, ensure these are connected and properly used.** *Use of these devices can reduce dust-related hazards.*
   - H. **Keep hands and feet away from the cutting area.**
4. **Power tool use and care**
   - A. **Do not force the power tool. Use the correct power tool for your application.** *The correct power tool will do the job better and safer at the rate for which it was designed.*
   - B. **Do not use the power tool if the switch does not turn it on and off.** *Any power tool that cannot be controlled with the switch is dangerous and must be repaired.*
   - C. **Disconnect the plug from the power source and/or the battery pack from the power tool before making any adjustments, changing accessories, or storing power tools.** *Such preventive safety measures reduce the risk of starting the power tool accidentally.*
   - D. **Store idle power tools out of the reach of children and do not allow persons unfamiliar with the power tool or these instructions to operate the power tool.** *Power tools are dangerous in the hands of untrained users.*
   - E. **Store idle appliances indoors.** *When not in use, appliances should be stored indoors in a dry and high or locked-up place, out of the reach of children.*
   - F. **Maintain power tools. Check for misalignment or binding of moving parts, breakage of parts and any other condition that may affect the power tools operation. If**

© 2011—The Toro® Company
8111 Lyndale Avenue South
Bloomington, MN 55420

Original Instructions (EN)
Printed in China
All Rights Reserved

damaged, have the power tool repaired before use. *Many accidents are caused by poorly maintained power tools.*

G. **Keep cutting tools sharp and clean.** *Properly maintained cutting tools with sharp cutting edges are less likely to bind and are easier to control.*

H. **Use the power tool, accessories and tool bits etc., in accordance with these instructions and in the manner intended for the particular type of power tool, taking into account the working conditions and the work to be performed.** *Use of the power tool for operations different from those intended could result in a hazardous situation.*

I. **Keep guards in place and in working order.**

5. **Service**

Have your power tool serviced by a qualified repair person using only identical replacement parts. *This will ensure that the safety of the power tool is maintained.*

6. **Battery Safety**

A. Do not charge appliance in rain, or in wet locations.

B. Do not use battery-operated appliance in the rain.

C. Use only the following type and size battery(ies): Toro battery model 88502.

D. Remove or disconnect the battery before servicing, cleaning, or removing material from the gardening appliance.

E. Do not dispose of the battery(ies) in a fire. The cell may explode. Check with local codes for possible special disposal instructions.

F. Do not open or mutilate the battery(ies). Released electrolyte is corrosive and may cause damage to the eyes or skin. It may be toxic if swallowed.

G. Exercise care in handling batteries in order not to short the battery with conducting materials such as rings, bracelets, and keys. The battery or conductor may overheat and cause burns.

SAVE THESE INSTRUCTIONS

Safety and Instructional Decals

Safety decals and instructions are easily visible to the operator and are located near any area of potential danger. Replace any decal that is damaged or lost.

Symbol	Name	Designation/Explanation
DC	Direct current	Type of current
V	Volts	Voltage



ID-1009



ID-1017



ID-1018

1. Warning
2. Read the *Operator's Manual.*
3. Do not use in wet environments.
4. Wear eye protection

Setup

Loose Parts

Use the chart below to verify that all parts have been shipped.

Procedure	Description	Qty.	Use
1	Auxiliary handle Latch Brace	1 1 1	Installing auxiliary handle.
2	Guard Phillips head screw	1 1	Mounting the guard to the base of the trimmer.
3	Wire edge guard	1	Installing the edge guard
4	No parts required	–	

1

Installing the Auxiliary Handle

Parts needed for this procedure:

1. Position the auxiliary handle on the shaft of the trimmer with the smooth surface facing the operator (Figure 1).

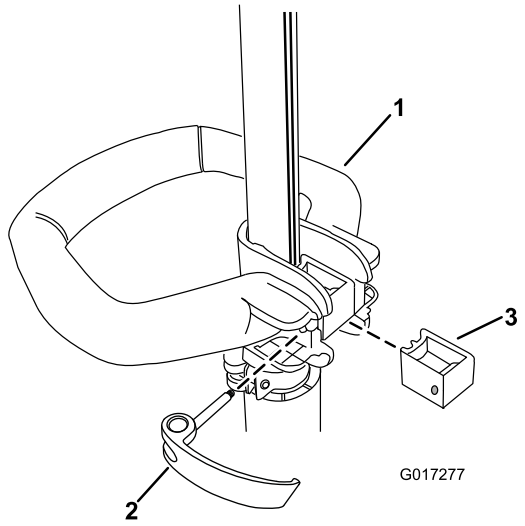

Figure 1

1. Auxiliary handle
2. Latch
3. Brace

2. Slide the brace into the auxiliary handle so that the brace rests in the groove along the shaft (Figure 1).
3. Slide the latch from the left through the handle and brace as shown and tighten the latch screw with a Phillips head screwdriver (Figure 1).

2

Installing the Guard

Parts needed for this procedure:

1. Slide the guard onto the trimmer base as shown in Figure 2.

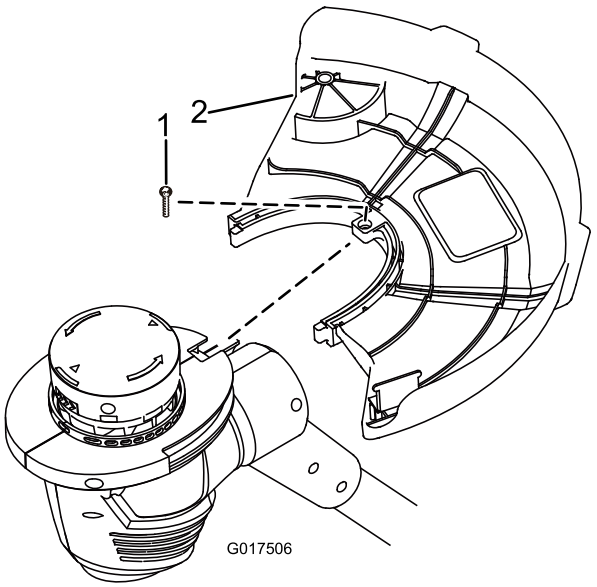

Figure 2

1. Phillips head screw
2. Guard

2. Secure the guard using a Phillips head screw.

3

Installing the Edge Guard

Parts needed for this procedure:

Insert the ends of the wire edge guard into the holes in the trimmer housing, as shown in Figure 3.

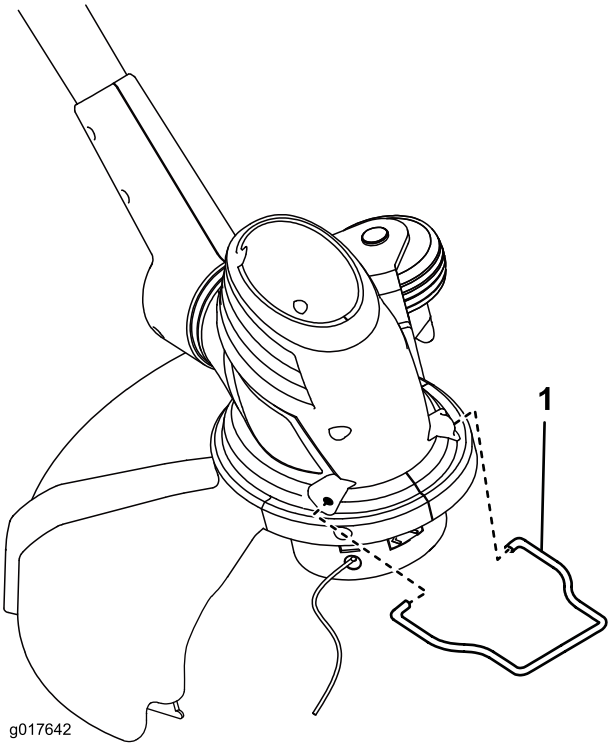

Figure 3

1. Wire edge guard

4

Adjusting the Trimmer Height and Base Orientation

No Parts Required

- To adjust handle height, flip the auxiliary handle latch, slide it up or down to the desired height, then secure it in place by closing the latch (Figure 4).

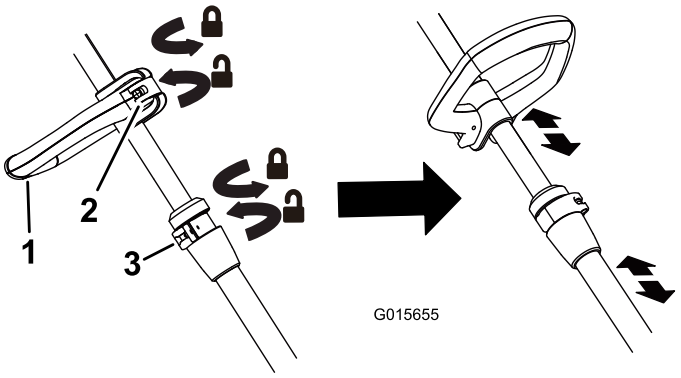

Figure 4

1. Auxiliary handle
2. Auxiliary handle latch
3. Height adjustment latch

- To adjust the trimmer height, open the height adjustment latch, then slide the shaft up or down to desired height, securing it in place with the latch (Figure 4).
- To adjust the orientation of the base, press down on the rotator button located at the base of the shaft, then move the base to face the desired direction (Figure 5).

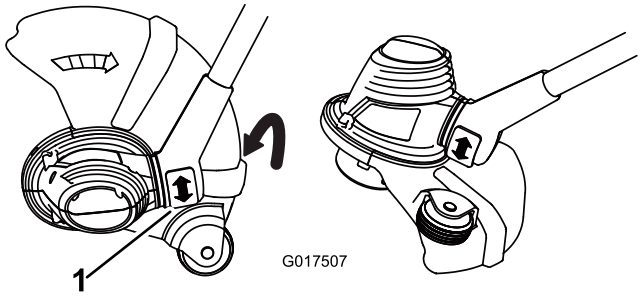

Figure 5

1. Rotator button

Operation

NOTICE! **The battery pack is not fully charged when it is purchased. Before using the trimmer for the first time, place the battery pack in the charger and charge until the LED indicators turn green. Make sure to read all safety precautions. With regular use, it will need shorter charging time. If storing for a prolonged period of time, remove the battery. When ready to use again, charge the battery pack until the LED indicators turn green.**

Starting the Trimmer

1. Align the tongue of the battery pack with the cavity in the handle housing (Figure 6).

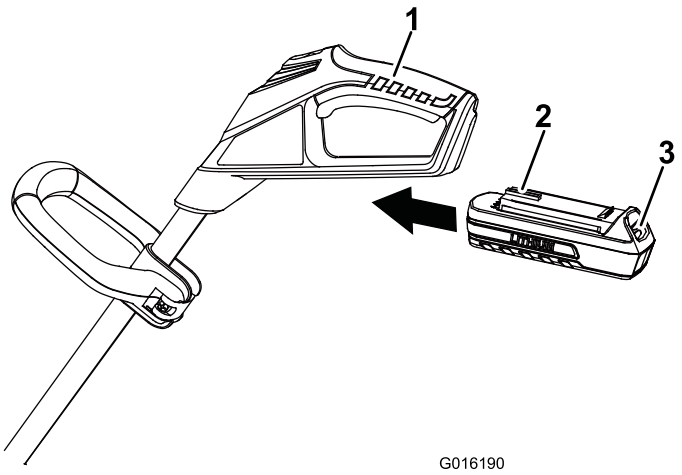

Figure 6

1. Trigger handle
2. Tongue
3. Latch

2. Grasp the trigger handle (Figure 6).
3. Push the battery pack into the handle until the latch locks into place.
4. To start the trimmer, slide the lock switch back to the On position, then squeeze the trigger (Figure 6).

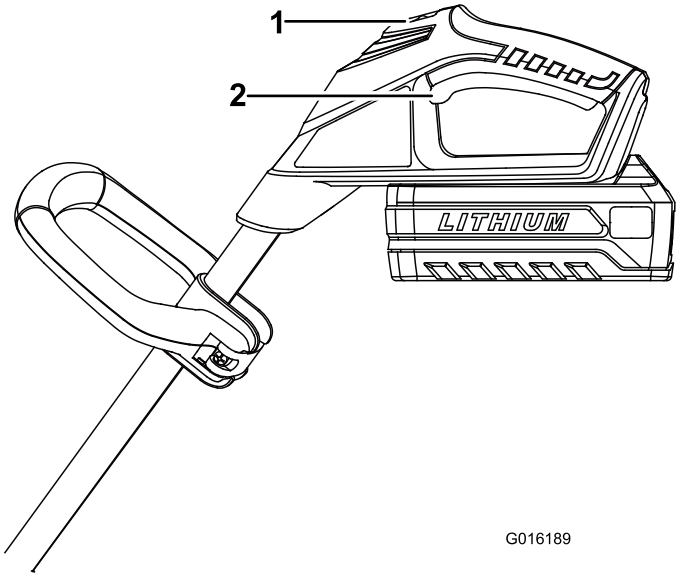

Figure 7

1. Lock switch
2. Trigger

Stopping the Trimmer

To stop the trimmer, release the trigger.

Charging the Battery Pack

NOTICE! **For best results, your battery tool should be charged in a location where the temperature is more than 41 degrees F (5 degrees C) but less than 104 degrees F (40 degrees C). To reduce the risk of serious personal injury, do not store outside or in vehicles. Charging time will be increased if not charged within this range.**

1. Turn the battery upside down and line up the battery terminal with the slot in the charger (Figure 8 and Figure 9).

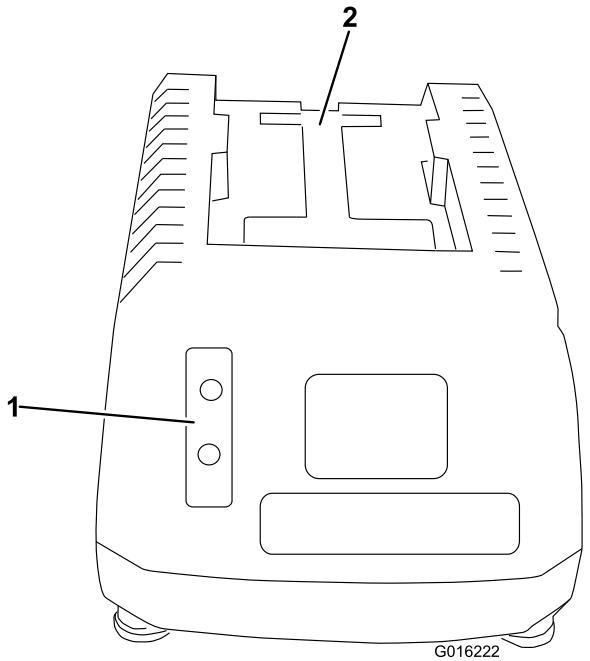

Figure 8

1. LED indicators
2. Insert battery here

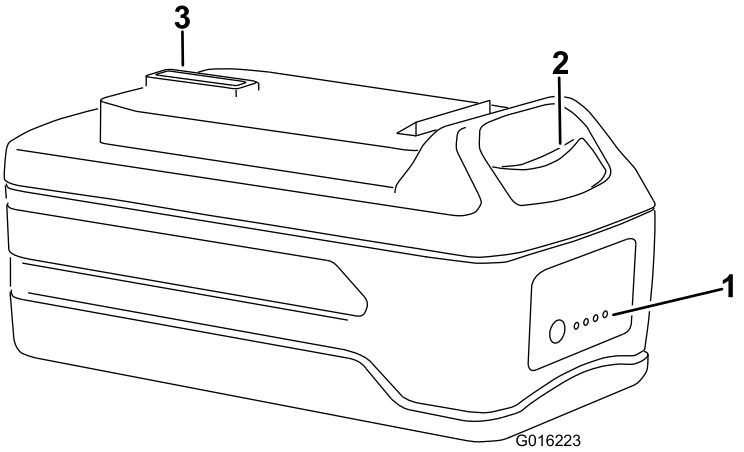

Figure 9

1. LED indicators (level of charge)
2. Release button
3. Battery terminal

2. Slide the battery into the charger until it clicks into place.
3. To remove the battery, press down on the release button and slide the battery backwards out of the charger.

4. Refer to the table below to interpret the LED indicators on the battery charger.

LED COLOR		
Top	Bottom	Indicates:
Red	Red	Battery is charging
Red	Green	Fully charged
Red	Orange	Battery is too warm: Remove for approximately 30 minutes
Red	Green	No battery present
Red (blinking)	Red (blinking)	Defective battery

Advancing the Line

Note: The trimmer is equipped with an auto-feed head.

1. With the trimmer running, release the switch trigger.
2. Wait two seconds, then slide the lock switch back to the On position and squeeze the trigger.

   Note: The line will extend approximately 1/4 inch (6 mm) with each stop and start of the switch trimmer until the line reaches the length of the grass deflector blade.
3. Resume trimming.

Advancing the Line Manually

Disconnect the string trimmer from the power supply, then push the red button at the base of the spool retainer while pulling on the trimmer line to manually advance the line.

Trimming



Figure 10

Edging

As an edger, press the rotator button and rotate the head as shown in Figure 11.

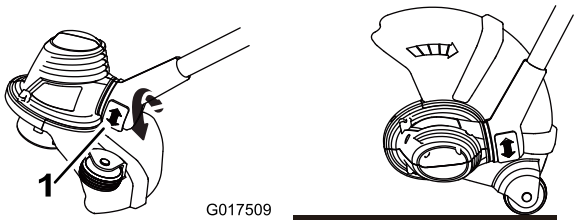

Figure 11

1. Rotator button

Operating Tips

- Keep the trimmer tilted toward the area being cut; this is the best cutting area.
- The string trimmer cuts when passing the unit from left to right. This will avoid throwing debris at the operator.
- Use the tip of the string to do the cutting; do not force string head into uncut grass.

- Wire and picket fences cause extra string wear, even breakage. Stone and brick walls, curbs, and wood may wear string rapidly.
- Avoid trees and shrubs. Tree bark, wood moldings, siding, and fence posts can easily be damaged by the strings.

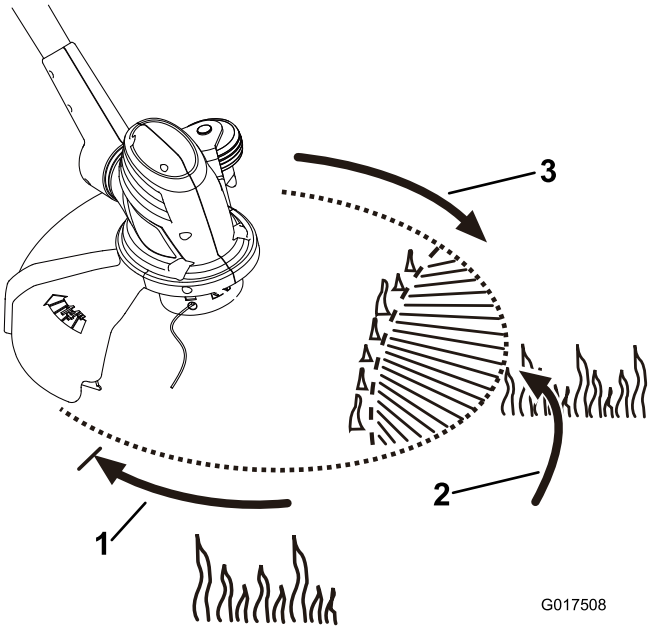

Figure 12

1. Direction of rotation
2. Ideal cutting range
3. String path

Maintenance

After each use of the trimmer, complete the following:

- Wipe the trimmer clean with a damp cloth. **Do not hose the trimmer down or submerge it in water.**
- Wipe or scrape clean the cutting head area any time there is an accumulation of debris.
- Check and tighten all fasteners. If any part is damaged or lost, repair or replace it.
- Brush debris away from air intake vents on the back of the shaft to prevent the motor from overheating.

Replacing the Spool

Use only .065 inch (1.65 mm) diameter monofilament string. Use original manufacturer's replacement string for best performance (Toro part number 88532).

1. Remove the battery.
2. Push in the tabs on the side of the spool retainer (Figure 13).

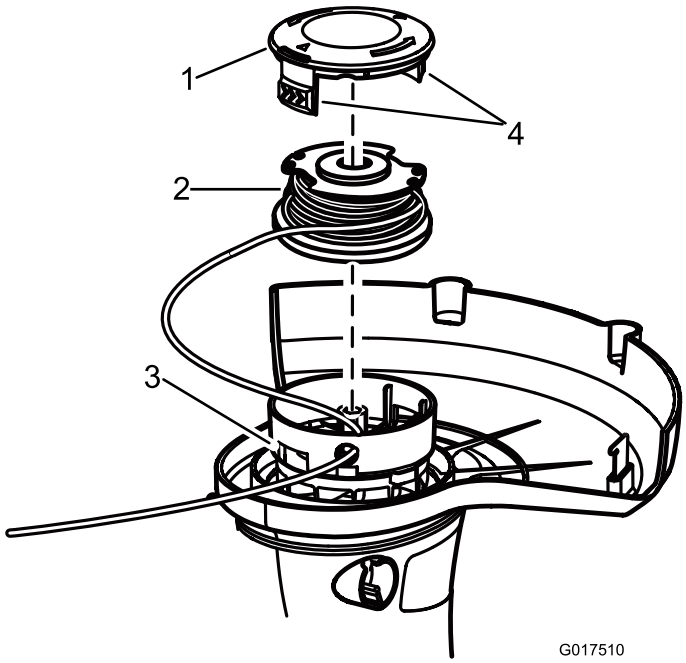

Figure 13

1. Spool retainer
2. Spool
3. Slots
4. Tabs

3. Pull the spool retainer up to remove it and remove the spool.
4. To install the new spool, make sure the string is captured in one of the retaining slots on the new spool. Make sure the end of the string extends approximately 6 inches (152 mm).
5. Install the new spool so that the string aligns with the eyelet in the string head. Thread the string into the eyelet.
6. Pull the string extending from the string head so the string releases from the slot in the spool.
7. Reinstall the spool retainer by depressing tabs into slots and pushing down until spool retainer clicks into place.

Replacing the String

1. Remove the battery.
2. Remove the spool. See Replacing the Spool (Figure 13).

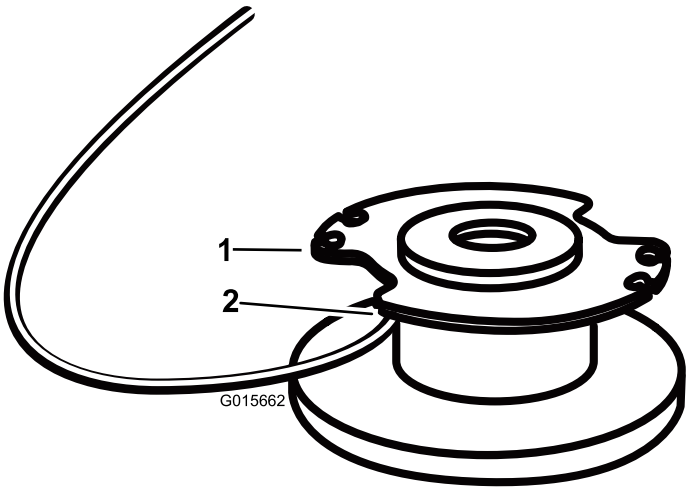

Figure 14

1. Spool
2. Hole

Note: Remove any old string remaining on the spool.

3. The spool will accept up to 15 feet of string.**Use only .065 inch (1.65 mm) diameter monofilament string.**

   Note: Do not use any other gauge or type of string, as this could damage the trimmer.

4. Insert the string into the anchor hole in the upper part of the spool (Figure 14). Wind the string onto the spool in the direction shown by the arrows on the spool.

5. Place the string in the slot on the upper spool flange, leaving about 6 inch (152 mm) extended beyond the slot.

   Note: Do not overfill. After winding the string, there should be at least 1/4 inch (6 mm) between the wound string and the outside edge of the spool.

6. Replace the spool and the spool retainer. Refer to Spool Replacement earlier in this manual.

Battery Pack Preparation For Recycling

⚠ WARNING

Upon removal, cover the battery pack's terminals with heavy-duty adhesive tape. Do not attempt to destroy or disassemble the battery pack or remove any of its components. Lithium-ion batteries must be recycled or disposed of properly at the nearest battery recycling facility.

Service

Should this item need service, take the product to your Authorized Toro Service Dealer. Your Toro Dealer is specially trained to repair Toro products and will ensure that your Toro stays “All” Toro.

Storage

- Clean all foreign material from the product.
- Store it in a well-ventilated place that is inaccessible to children.
- Keep away from corrosive agents such as garden chemicals and de-icing salts.

The Toro Promise - Electric Trimmers

A Two-Year Full Warranty for Residential Use for the United States and Canada

The Toro Company and its affiliate, Toro Warranty Company, pursuant to an agreement between them, jointly warrant this product for two years against defects in material or workmanship when used for normal residential purposes.*

- If you have questions or problems, or before returning this product, call toll free: 1-800-237–2654 (US) or 1-800-248-3258 (Canada).
- To receive a replacement or repair, at our option, return the complete unit to the seller. United States and Canada customers may return their product, with proof of purchase, to any Authorized Service Dealer. United States customers may also return their product, with proof of purchase, postage prepaid, to the Toro Service Center, 21350 Cedar Avenue S., Lakeville, MN 55044-9090.

This warranty covers product defects only. **Neither The Toro Company nor Toro Warranty Company is liable for indirect, incidental or consequential damages in connection with the use of the Toro Products covered by this warranty, including any cost or expense of providing substitute equipment or service during reasonable periods of malfunction or non-use pending completion of repairs under this warranty. Some states do not allow exclusions of incidental or consequential damages, so the above exclusions may not apply to you.** This warranty gives you specific legal rights, and you may also have other rights which vary from state to state.

Countries Other than the United States and Canada

Customers who have purchased Toro products exported from the United States or Canada should contact their Toro Distributor (Dealer) to obtain guarantee policies for your country, province, or state. If for any reason you are dissatisfied with your Distributor’s service or have difficulty obtaining guarantee information, contact the Toro importer. If all other remedies fail, you may contact us at Toro Warranty Company.

* Residential use means use of the product on the same lot as your home.

Part Number 374-0279 Rev. A