Form No. 3372-547 Rev A

TORO®

Count on it.

Parts Catalog

12in Cordless Trimmer

Model No. 51484—Serial No. 312000001 and Up

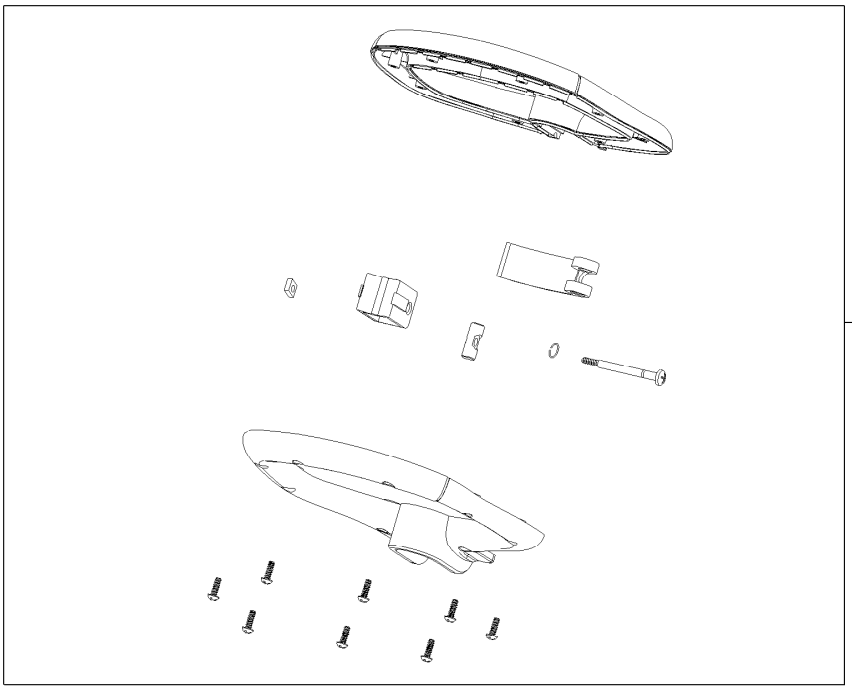

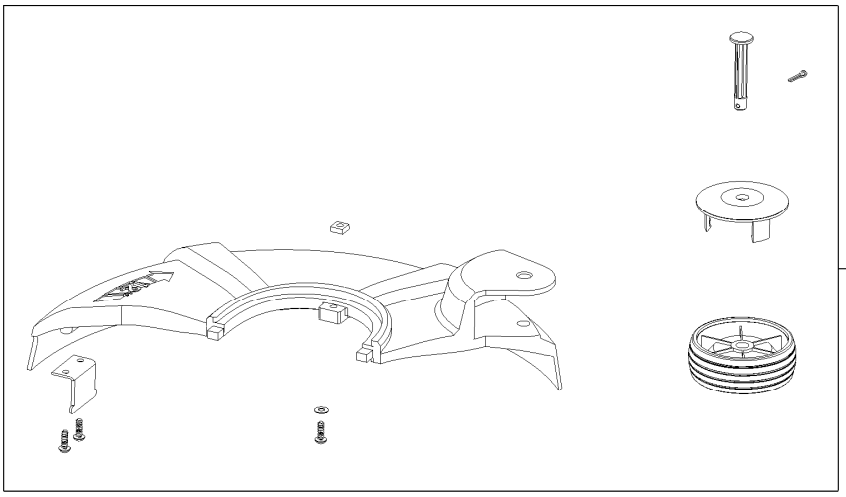

Assist Handle and Shield Assembly

Ref.	*Part Number*	*Qty.*	*Description*
1	119-9750	1	Assist Handle ASM
2	119-9755	1	Shield ASM

Attachments and Accessories

For 51484 12in Cordless Trimmer

Product Name	Model/Part
20V Battery Charger	88500
20V Battery Pack	88502
Spool	88532



Count on it.