FORM NO. 3318–746

TORO®

MODEL NO. 04480–60657
MODEL NO. 04481–60549

PARTS CATALOG

8 & 11 BLADE 4 BOLT CUTTING UNIT

For Greensmaster® 3200

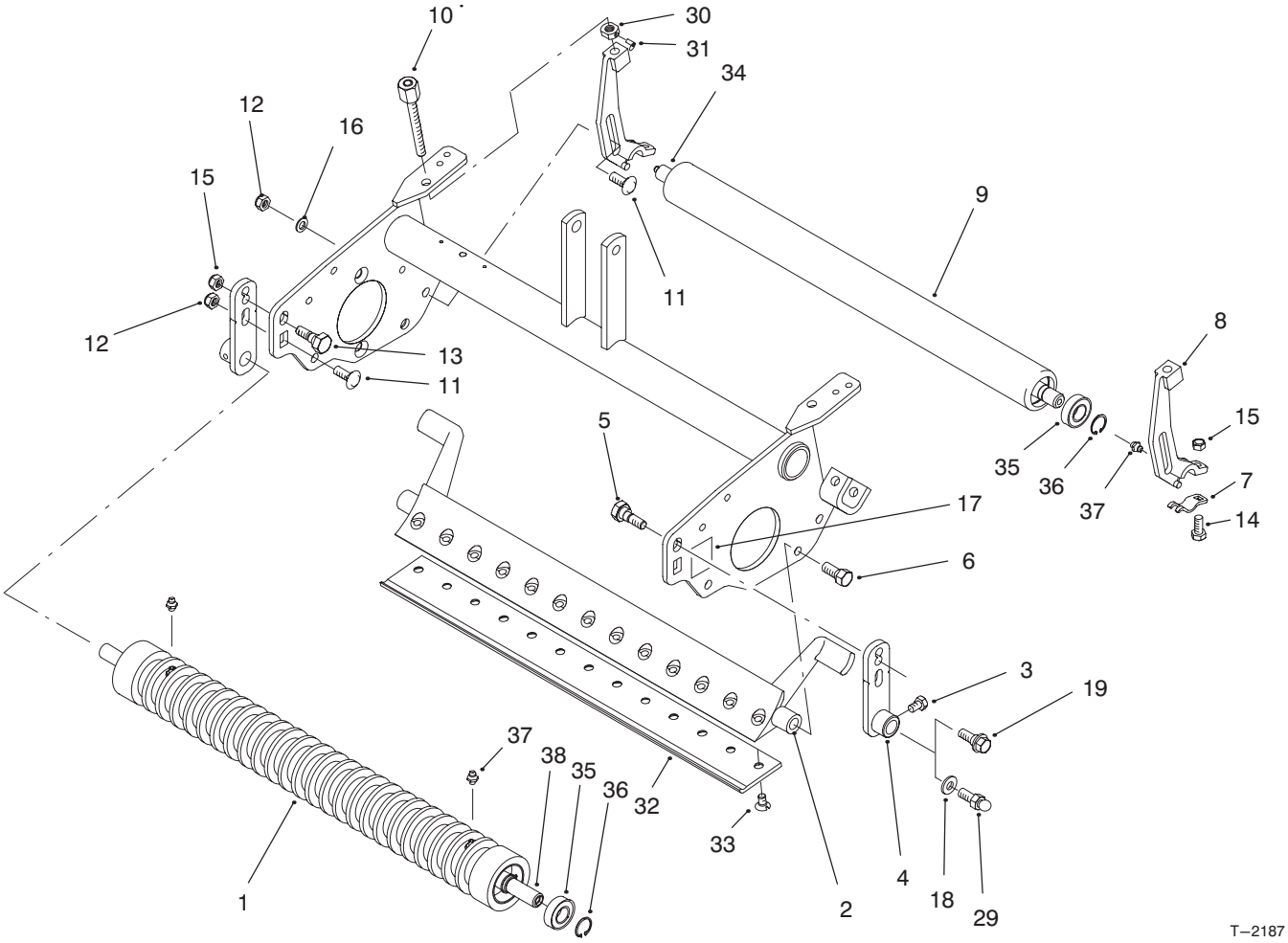

ROLLERS & BEDBAR ASSEMBLY

Ref. No.	Part No.	Description	No. Used
1	94–6389	Roller – Wiehle	1
2	93–2576	Bedbar	1
3	33113–012	Screw – HH	2
4	94–8170	Bracket – Front	2
5	95–1618	Bolt – Shoulder	1
6	217–74	Bolt – Wheel	2
7	95–1637	Collar – Height–of–Cut	2
8	95–1638	Bracket – Height–of–Cut Adjustment	2
9	93–2467	Tube – Roller	1
10	95–1633	Height–of–Cut Adj. Assy.	2
11	33125–025	Screw – Carriage	4
12	33025–00	Nut – Lock	4
13	95–1617	Bolt – Eccentric	1
14	33114–020	Screw – Carriage	2
15	33024–00	Nut – Lock	4

Ref. No.	Part No.	Description	No. Used
16	3256–46	Washer – Flat	2
17	94–8169	Decal – Bracket Position	2
18	3254–6	Washer – Lock, Int.	2
19	93–2364	Bolt – Shoulder	2
29	94–2958	Stud – Ball (Used on old suspensions)	2
30	95–1632	Nut – Lock	2
31	3245–42	Screw – Set	2
32	93–4263	Knife – Bed Tournament	1
*	93–4262	Knife – Bed Microcut	1
*	93–4264	Knife – Bed Low 1/8”	1
*	94–6392	Knife – Bed High 3/16”	1
*	63–8600	Knife – Bed Fairway	1
33	57–4910	Screw – Special	13
34	93–2466	Shaft	1
35	93–2559	Bearing	4

*Not Illustrated
Note: Quantity is for 1 Cutting Unit.

© The TORO Company – 1996
All Rights Reserved

3318−746

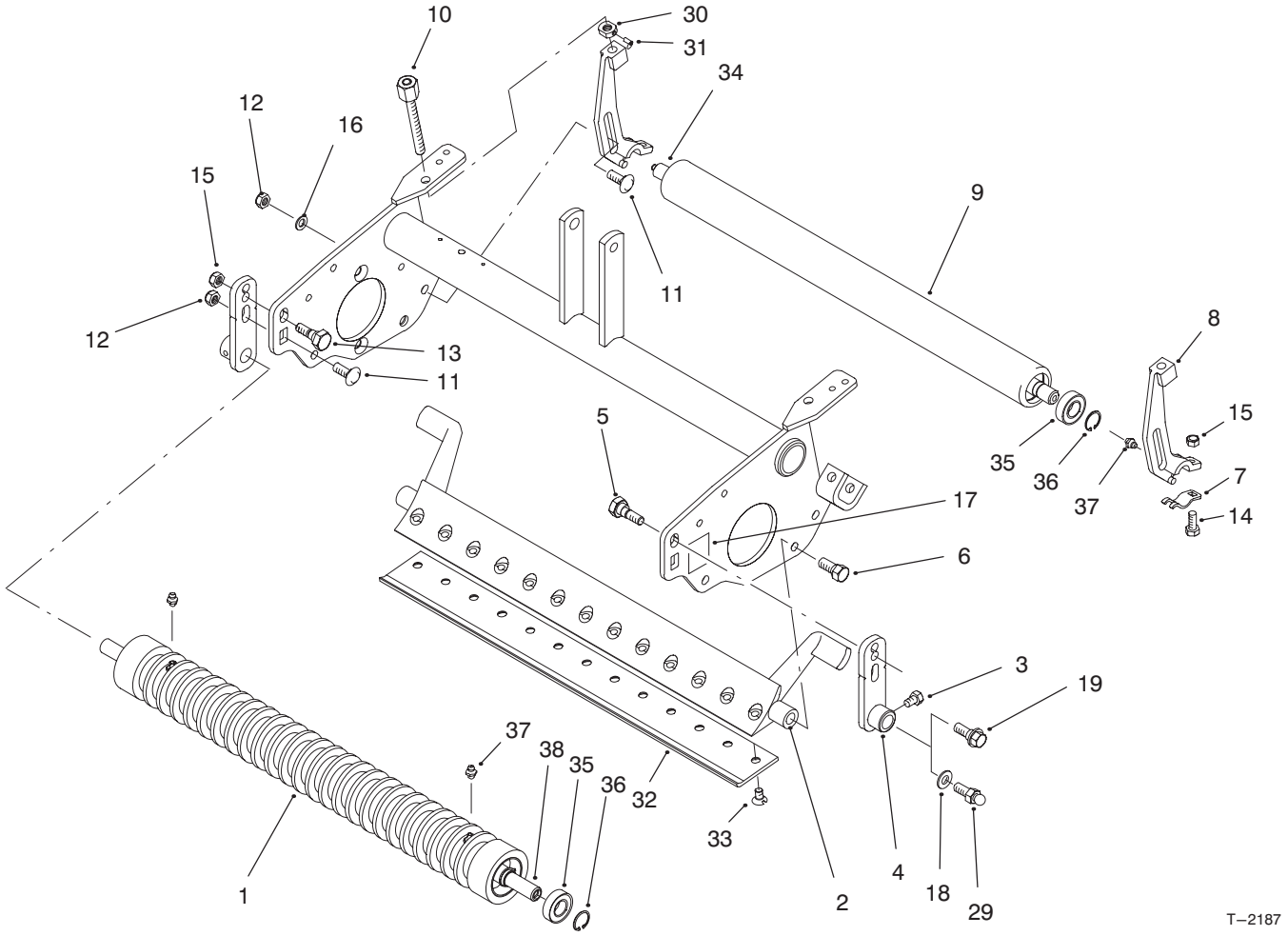

ROLLERS & BEDBAR ASSEMBLY (Continued)

Ref. No.	Part No.	Description	No. Used
36	93−2525	Ring − Retaining	4
37	302−5	Fitting − Grease	4
38	93−2470	Shaft − Roller, Wiehle	1

Ref. No.	Part No.	Description	No. Used
*	93−2465	Rear Roller Assembly (Incl. Ref. #9 & 34−37)	1
*	94−8171	Wiehle Roller Assembly (Incl. Ref. #1 & 35−38)	1

*Not Illustrated
Note: Quantity is for 1 Cutting Unit.

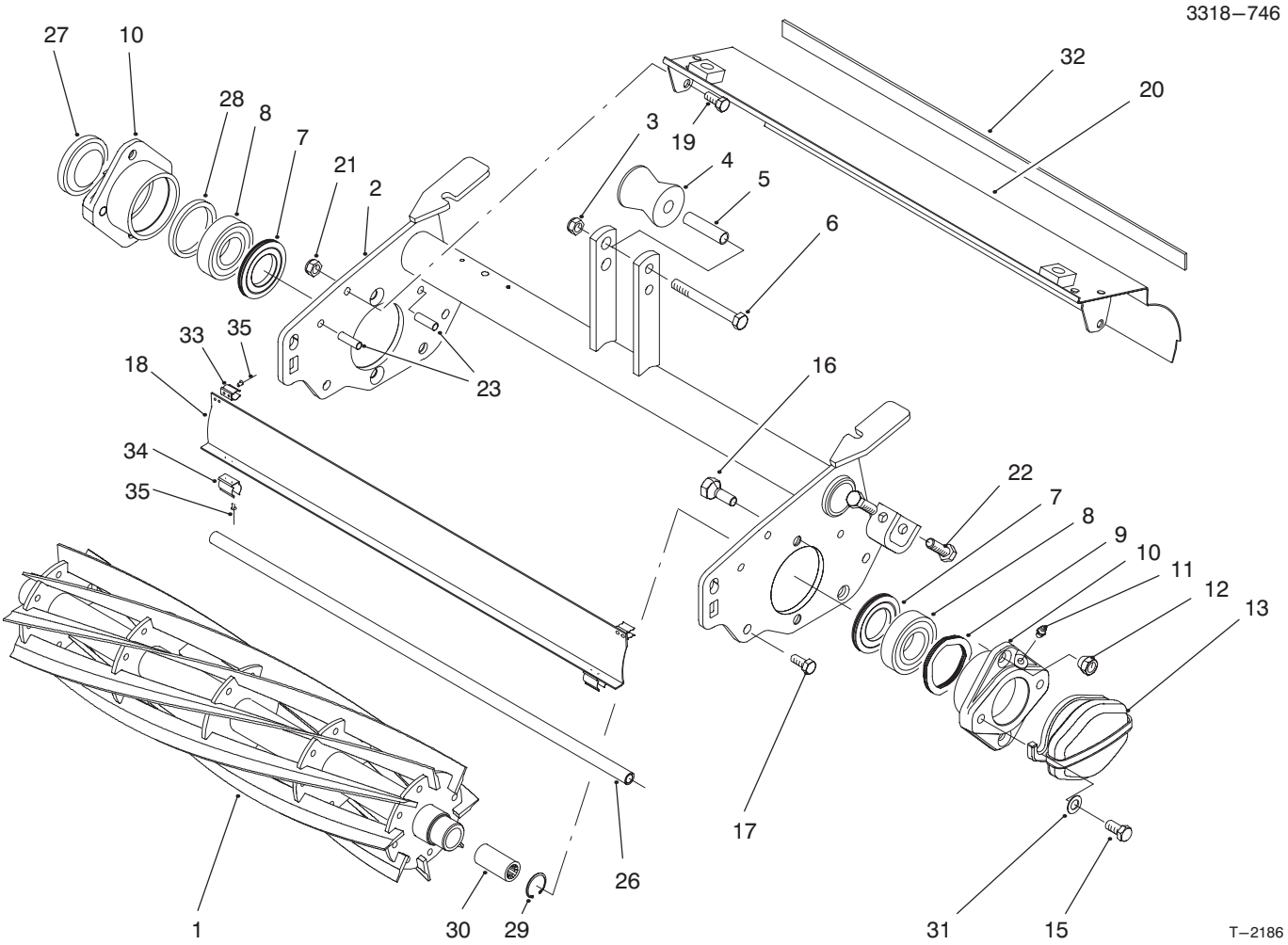

REEL & SHIELDS ASSEMBLY

Ref. No.	Part No.	Description	No. Used
1	94–4356	Reel WA. – 8 Blade	1
*	94–4357	Reel WA. – 11 Blade	1
2	95–1635	Frame	1
3	33025–00	Nut – Lock	1
4	93–2463	Roller – Lift	1
5	93–2464	Spacer – Roller	1
6	33115–080	Screw – HH	1
7	4–8908	Seal – Grease	2
8	93–2489	Bearing	2
9	94–4543	Spring – Flat Wire	1
10	94–4545	Housing – Bearing	2
11	302–5	Fitting – Grease	2
12	93–2454	Nut – Taper	4
13	93–2570	Weight – Counter	1
15	93–2569	Screw – HHF	4
16	94–1341	Screw – TPRD	4
17	33115–20	Screw – HHF	2

Ref. No.	Part No.	Description	No. Used
18	93–2475	Front Shield Assembly (Incl. Ref. #33–35)	1
19	33114–020	Screw – HHF	2
20	93–2481	Asm. – Shield, Rear	1
21	33024–00	Nut – Lock	2
22	33114–030	Screw – HH	4
23	32121–123	Pin – Spring	4
26	93–2477	Rod – Shield	1
27	2410–30	Cap – Plastic	1
28	94–4544	Spacer – Bearing	1
29	32120–37	Ring – Retaining, Int.	1
30	94–4507	Coupler – Drive	2
31	3256–24	Washer	2
32	95–1636	Strip – Seal	1
33	94–1381	Clip – Spring Small	2
34	94–1380	Clip – Spring Large	2
35	3269–33	Rivet – Pop	8

*Not Illustrated
Note: Quantity is for 1 Cutting Unit.

MAINTENANCE RECORD

Date								

Compliance with Radio Interference Regulations Certified.
Certifie Conforme au Reglement sur le Brouillage Radioelectrique.

Litho in U.S.A.