Form No. 3371-566 Rev B

TORO®

Count on it.

Parts Catalog

Power Max 1028 OXE Snowthrower

Model No. 38644—Serial No. 312003430 and Up

Ordering Replacement Parts

To order replacement parts, please supply the part number, the quantity, and the description of each part desired.

Understanding Reference Numbers

Each identified part in an illustration has a reference number. The reference number for a part also appears in the parts list, along with other information about the part.

This catalog uses two special reference number formats, one to indicate parts in a service assembly and another to indicate the quantity of a given part in an illustration.

Service Assembly Reference Numbers

Parts in service assemblies have reference numbers in the form a:b. The a represents the reference number of the entire service assembly and the b represents a sequential number unique to each part within the service assembly.

For example, a wheel assembly might be identified by reference number 6, the tire by 6:1, the valve by 6:2, and the wheel by 6:3. When you order the assembly identified by reference number 6, you receive all parts identified by reference numbers 6:1,6:2, and 6:3. However, you may also order any part individually. Reference numbers of this type appear in illustration and in parts lists.

Reference Numbers Indicating Quantity

In an illustration, if a reference number indicates more than one part, the reference number has the form nX y. The n represents the quantity of the part, the X is the multiplication symbol, and the y represents the reference number.

For example, in an illustration, the reference number 2X 37 means that two of the parts identified by reference number 37 are indicated.

List of Abbreviations

AR: as required

ASM: assembly

BBC: blade brake control

BHTF: button head thread forming

CARR: carriage

CCW: counter clockwise

CW: clockwise

DEG: degrees

DPA: Dual Point Adjustment

ECM: electronic control module

EXT: external

FH: flat head

GA: gauge

HD: heavy-duty

HF: hex flange

HH: hex head

HHF: hex head flange

HHFTF: hex head flange thread forming

HJ: hex jam

HLH: hex lag head

HOC: height-of-cut

HSBH: hex socket button head

HSFH: hex socket flat head

HSH: hex socket head

HWH: hex washer head

HWHTF: hex washer head thread forming

HYD: hydraulic

LH: left hand

LP: Liquid Propane

NI: nylon insert

NPTF: national pipe thread fine

PFH: phillips flat head

PPH: phillips pan head

PPHTF: phillips pan head thread forming

PRH: phillips round head

PTH: phillips truss head

PTO: power-take-off

RH: right hand

ROPS: roll-over protection system

RRB: rear roller brush

SFH: slotted fillister head

SHH: slotted hex head

SHWH: slotted hex washer head

SPH: slotted pan head

SQH: square head

SRH: slotted round head

STD: standard

TAP: self tapping

TTH: torx truss head

Contents

Auger and Housing Assembly 4
28 Inch Auger Gearcase Assembly No. 108-7329 6
Chute Assembly 7
Frame Assembly. 8
Handle Assembly 10
Lower Handle and Headlamp Assembly. 11
Lever Chute Control Assembly. 12
Engine Assembly 13
Wheel Clutch Assembly 14
Wheel Clutch Sprocket Assembly 16
Attachments and Accessories 17

© 2012—The Toro® Company
8111 Lyndale Avenue South
Bloomington, MN 55420

Contact us at www.Toro.com.
Printed in the USA.
All Rights Reserved

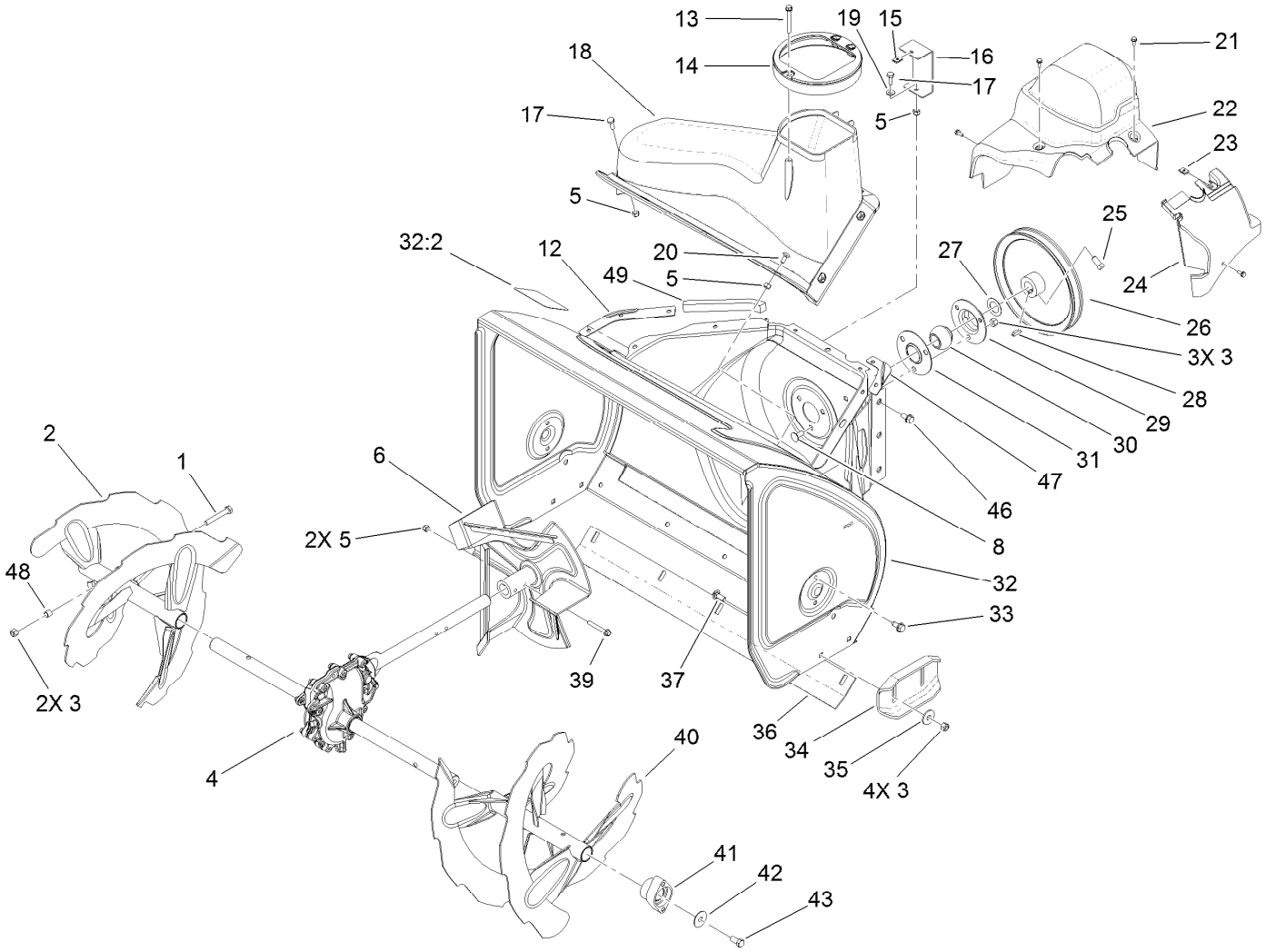

Auger and Housing Assembly

Ref.	Part Number	Qty.	Description
1	322-11	2	Screw-HH
2	106-7291-03	1	Auger-RH
3	3296-29	14	Nut-Lock, NI
4	108-7329	1	28 Inch Auger Gearcase ASM
5	3296-42	13	Nut-Lock, NI
6	106-4576-03	1	Impeller ASM
8	3230-23	8	Screw-CARR
12	107-1017-03	1	Seal-Flange, Cover
13	107-3003	1	Screw-Plastite
14	107-3006	1	Guide-Chute
15	107-1013	1	Nut-Speed, U-Type
16	107-1014-03	1	Bracket-Cover, Clip Nut
17	321-4	7	Screw-HH
18	108-0017	1	Cover
19	3256-22	1	Washer-Flat
20	3229-1	4	Screw-CARR
21	32144-112	4	Screw-HWH
22	119-1563	1	Cover-Belt
23	701493	1	Nut-Speed
24	107-1016	1	Cover-Extension, Belt

Ref.	Part Number	Qty.	Description
25	3242-4	2	Screw-Set, SQH
26	62-1300	1	Pulley-Impeller
27	252-80	1	Washer-Thrust
28	3257-23	1	Key-Woodruff
29	26-6110	1	Flange-Cup, Bearing
30	63-3450	1	Bearing-Ball
31	26-6120	1	Flange-Cup, Bearing
32	107-3824	1	Housing-Auger, 28 Inch
32:2	107-3040	1	Decal-Danger, Auger
33	32144-70	4	Screw-HWHTF
34	106-4588-01	2	Skid
35	52-2861	4	Washer
36	106-4573-01	1	Scraper-Fixed
37	3230-16	4	Screw-CARR
39	321-11	2	Screw-HH
40	106-7301-03	1	LH Auger ASM
41	106-4570	2	Auger-Bearing
42	3-0750	2	Washer
43	323-4	2	Screw-HH
46	32144-14	6	Screw-HWHTF
47	108-0039-03	1	Seal

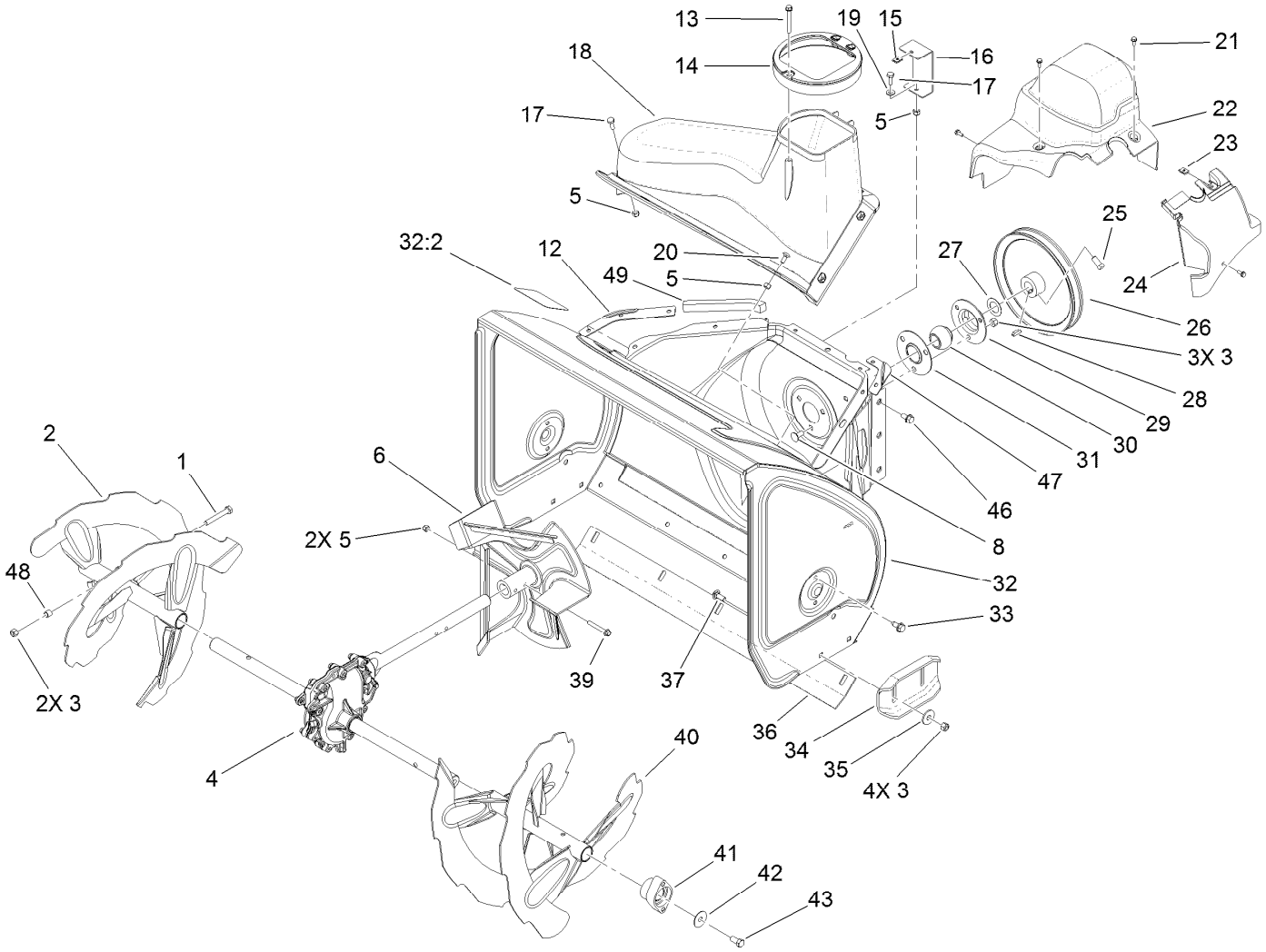

Auger and Housing Assembly (continued)

Ref.	*Part Number*	*Qty.*	*Description*
48	1-633545	2	Spacer
49	120-0124	1	Seal-Housing

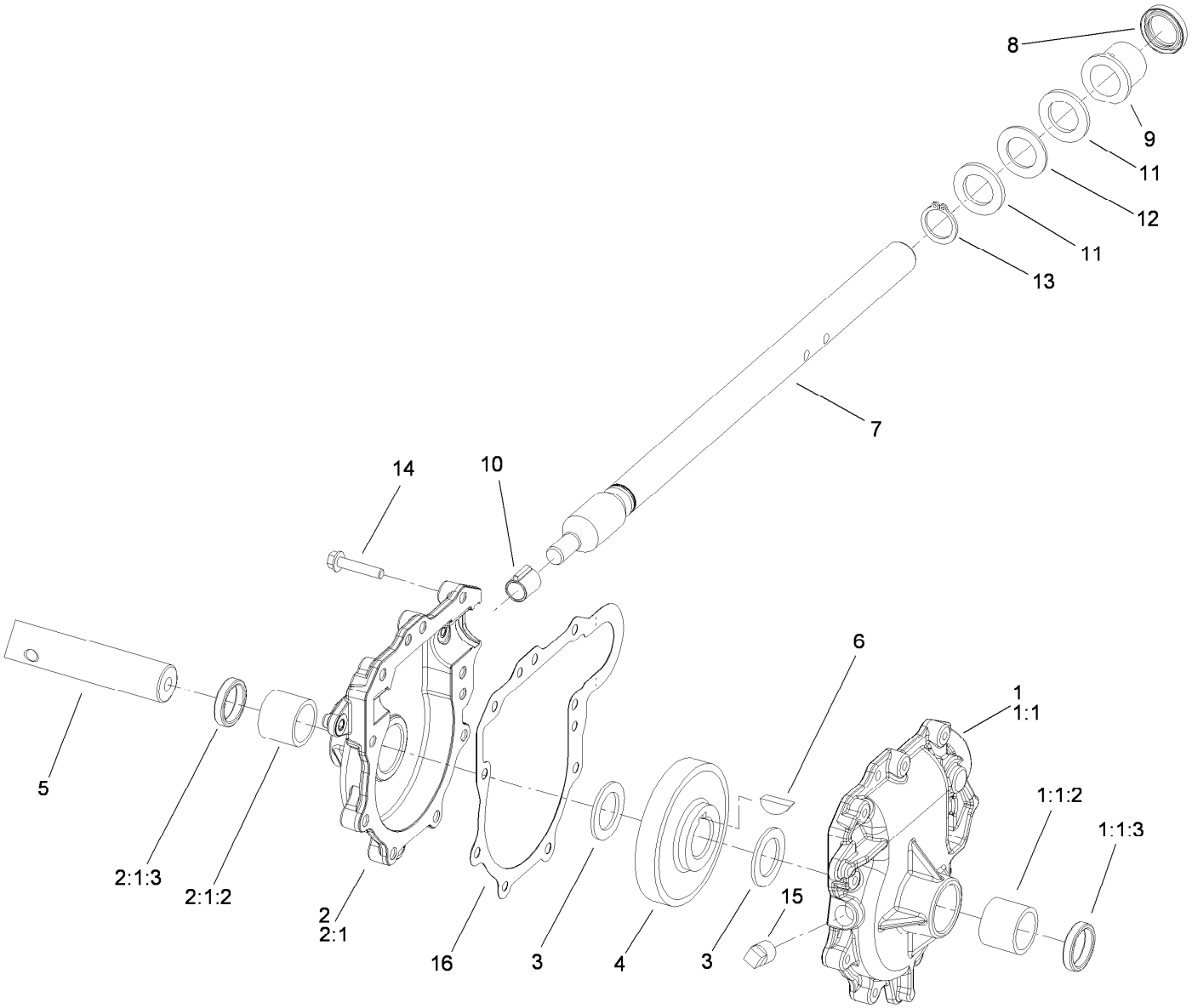

28 Inch Auger Gearcase Assembly No. 108-7329

Ref.	Part Number	Qty.	Description
1	108-7325	1	LH Auger Gearcase ASM
1:1		1	Gearcase-Auger, LH ●
1:1:2	112-6635	1	Bushing-Sleeve
1:1:3	7-0045	1	Seal-Oil
2	108-7327	1	RH Auger Gearcase ASM
2:1		1	Gearcase-Auger, RH ●
2:1:2	112-6635	1	Bushing-Sleeve
2:1:3	7-0045	1	Seal-Oil
3	252-71	2	Washer-Thrust
4	62-0120	1	Gear-Helical
5	106-4421	1	Shaft-Auger

Ref.	Part Number	Qty.	Description
6	3257-10	1	Key-Woodruff
7	66-7811	1	Shaft-Impeller
8	253-149	1	Seal-Oil
9	37-6560	1	Bushing-Input
10	62-1150	1	Bushing-Worm
11	252-78	2	Washer-Thrust
12	252-76	1	Bearing-Thrust
13	32151-33	1	Ring-Retaining, EXT
14	108-4862	9	Screw-HWHTF
15	281-1	1	Plug-Pipe, SQH
16	108-7330	1	Gasket-Gearcase, Auger

● Not serviced separately

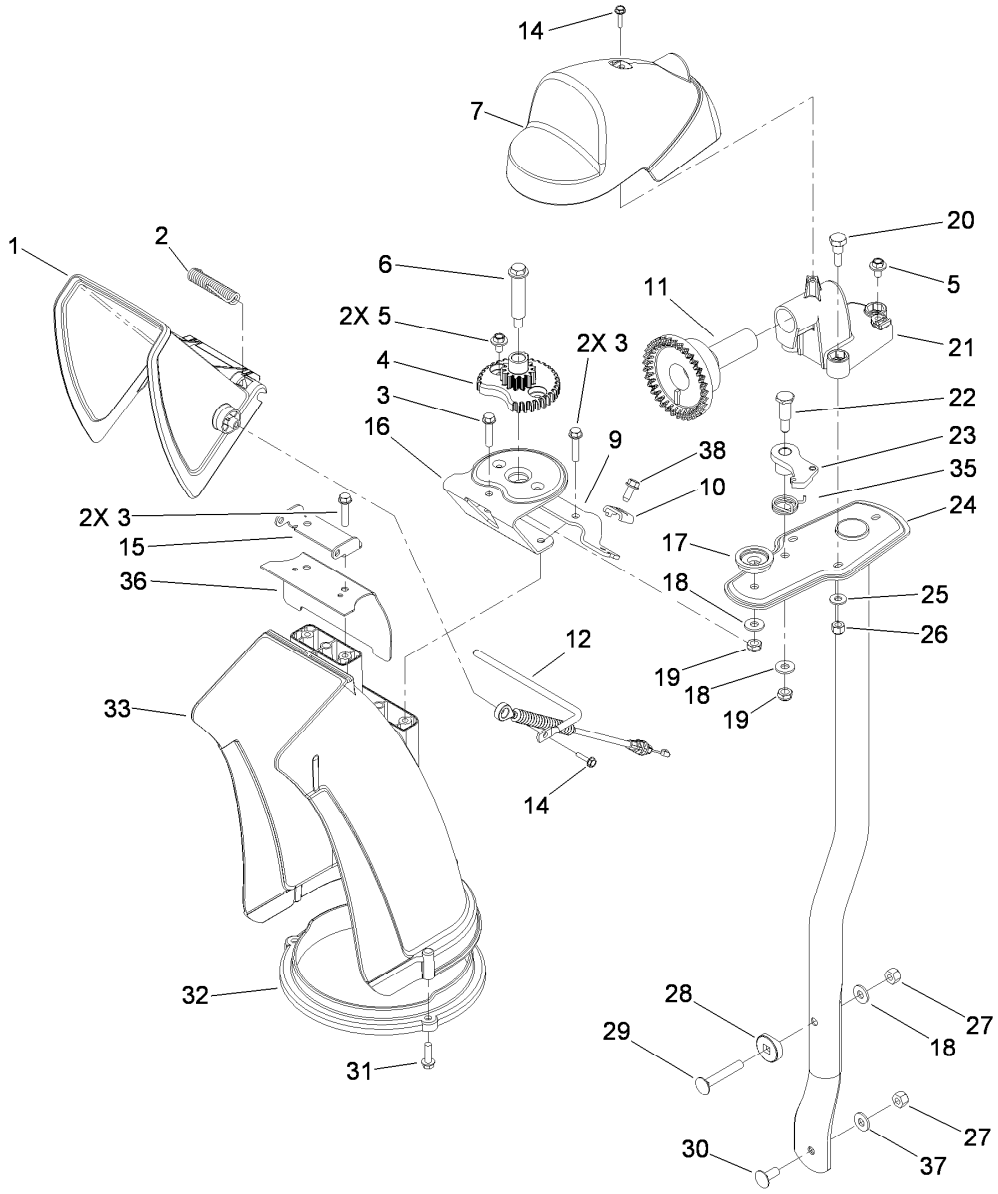

Chute Assembly

Ref.	Part Number	Qty.	Description
1	112-6629	1	Deflector-Chute, Ce
2	106-4594	1	Spring-Torsion
3	46-8092	5	Screw-Plastite
4	106-4472	1	Gear-Chute
5	46-6810	3	Screw And Washer ASM
6	100-9880	1	Bolt-Shoulder
7	106-4585	1	Cover-Gear, Chute
9	106-7296	1	Bracket-Cable, Clamp
10	106-7297	1	Clamp-Cable
11	106-4471	1	Gear-Face
12	107-1021	1	Rod-Deflector
14	98-1375	2	Screw-HWH
15	106-7266	1	Bracket-Deflector
16	106-4582-03	1	Bracket-Support, Chute
17	106-4422	1	Spacer-Chute
18	3256-2	3	Washer-Flat
19	3296-47	2	Nut-Lock, NI
20	106-7276	3	Screw-Shoulder

Ref.	Part Number	Qty.	Description
21	106-7257	1	Mount-Gear, Face
22	63-2650	1	Screw-Shoulder
23	106-4476	1	Latch-Chute
24	106-7253-03	1	Tube-Support
25	3256-22	3	Washer-Flat
26	3296-42	3	Nut-Lock, NI
27	3296-29	2	Nut-Lock, NI
28	106-7260	1	Washer-Curved
29	3230-5	1	Screw-CARR
30	3230-23	1	Screw-CARR
31	46-8091	3	Screw-HWH
32	105-9991	1	Ring-Chute
33	106-4440	1	Chute-Discharge
35	108-7315	1	Spring-Torsion
36	108-5052	1	Seal-Chute
37	3290-456	1	Washer-Belleville
38	32144-10	1	Screw-HWH

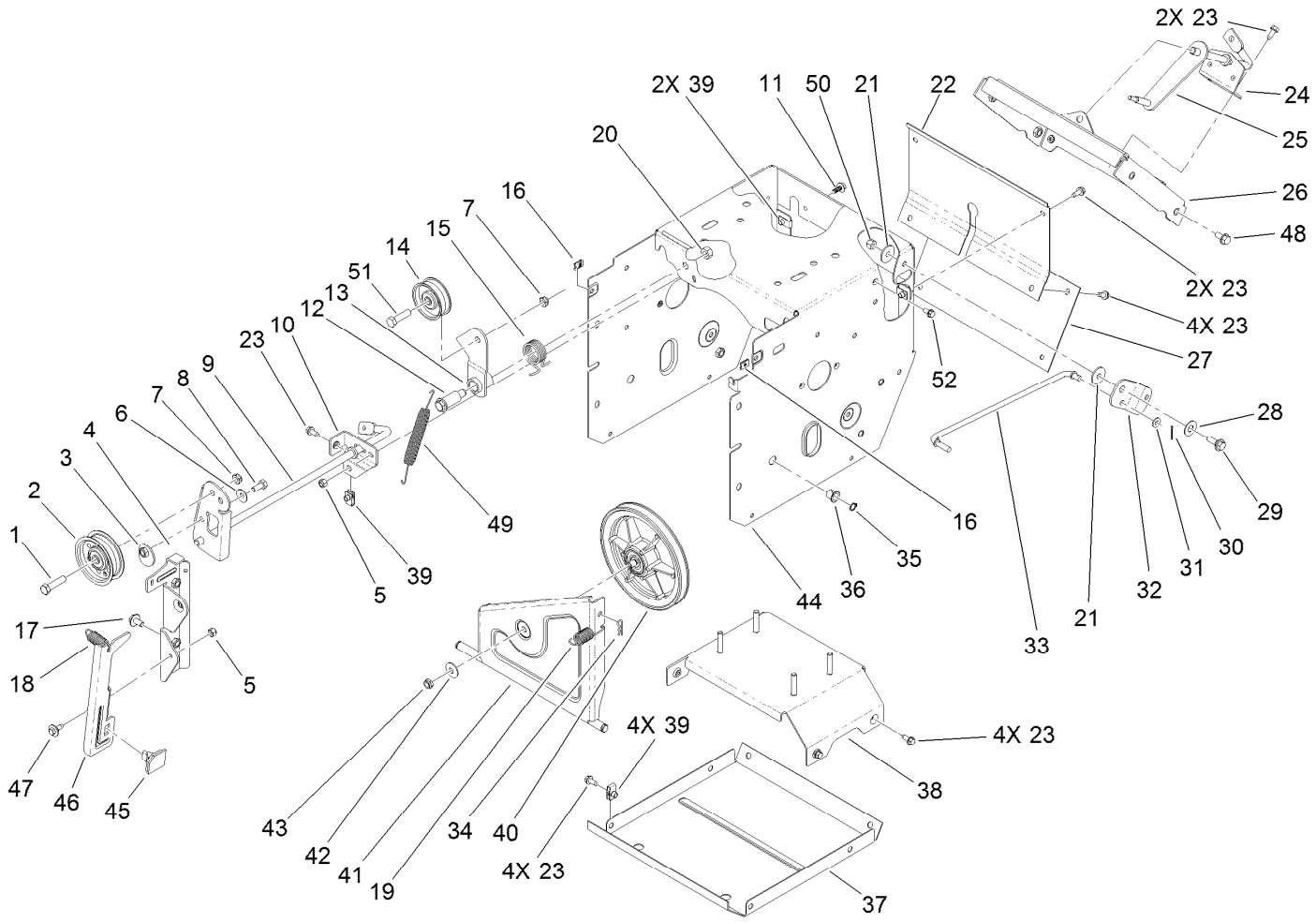

Frame Assembly

Ref.	Part Number	Qty.	Description
1	323-8	1	Screw-HH
2	92-7104	1	Pulley-Idler
3	107-1047	1	Nut
4	107-1039	1	Bracket-Idler, Impeller
5	3296-42	2	Nut-Lock, NI
6	3290-456	1	Washer-Belleville
7	3296-59	2	Nut-Lock, NI
8	322-3	1	Screw-HH
9	107-3838-03	1	Impeller Clutch ASM
10	120-9824	1	Bracket-Impeller, Clutch
11	99-6810	1	Screw-HH
12	108-5056	1	Bolt-Shoulder
13	108-5058	1	Arm-Idler, Traction
14	3-4244	1	Pulley-Idler
15	108-7332	1	Spring-Torsion
16	107-1013	2	Nut-Speed, U-Type
17	3234-7	2	Screw-HHF
18	107-1045	1	Spring-Extension
19	107-1003	1	Spring-Extension
20	3296-76	1	Nut-Lock, NI
21	5-4460	2	Washer-Pivot

Ref.	Part Number	Qty.	Description
22	108-0022-01	1	Cover-Upper
23	32144-10	17	Screw-HWH
24	108-0036	1	Bracket-Rod, Shift
25	106-7268	1	Lever-Control, Traction
26	108-0026-01	1	Shift Plate ASM
27	106-7345-01	1	Cover-Lower
28	25-5640	1	Washer
29	27-0410	1	Screw-Shoulder
30	3272-4	1	Pin-Cotter
31	3256-23	1	Washer-Flat
32	107-1011	1	Bellcrank-Drive
33	106-4467	1	Link-Control, Speed
34	3290-307	1	Pin-Hair
35	32151-61	2	Ring-Retaining
36	256-257	2	Bushing-Nyliner
37	106-7330-01	1	Pan-Bottom
38	112-8127	1	Frame Brace ASM
39	107069	8	Clip
40	108-0031	1	Traction Pulley ASM
41	108-7307	1	Friction Wheel Bracket ASM
42	3290-340	1	Washer-Belleville

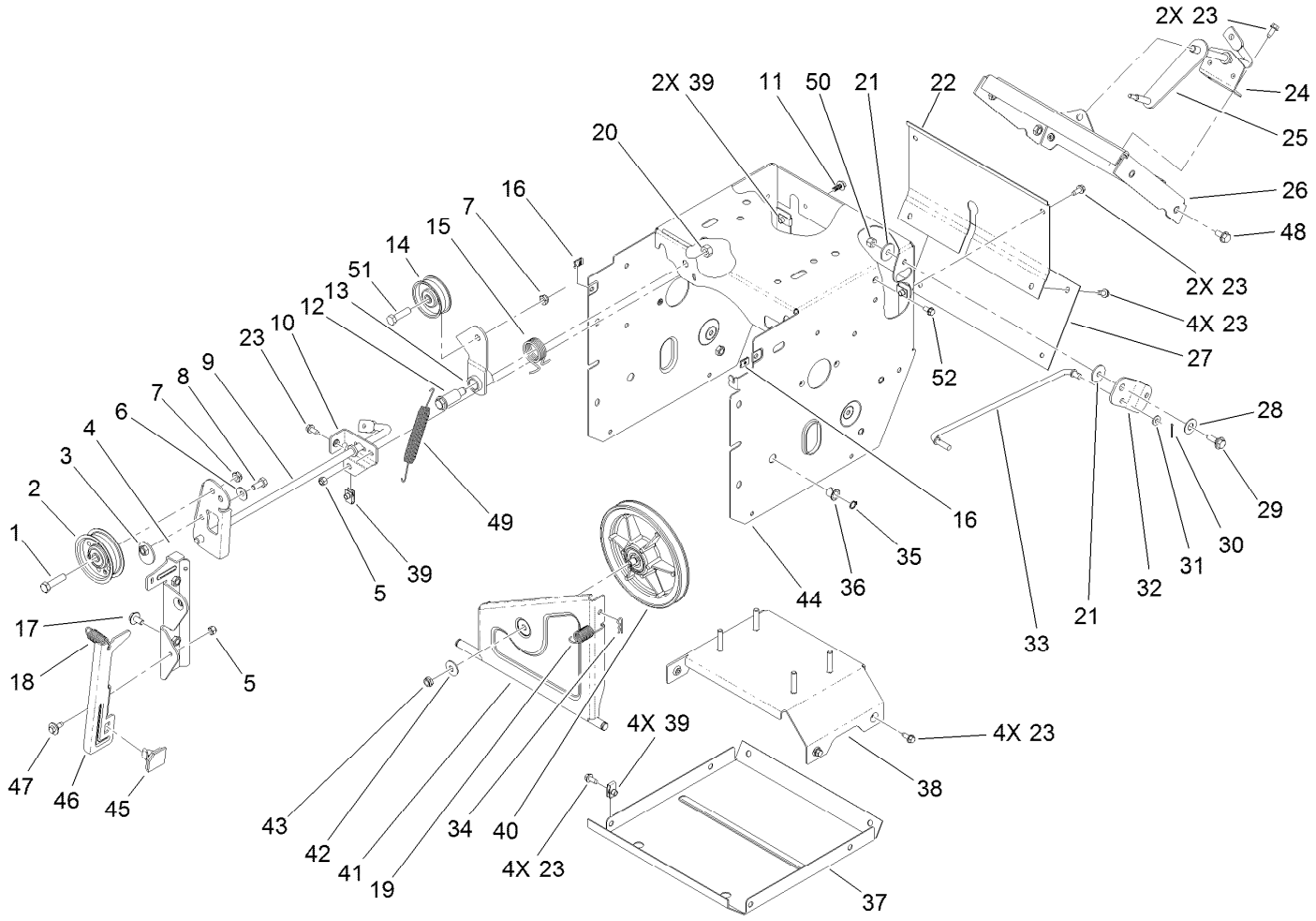

Frame Assembly (continued)

Ref.	Part Number	Qty.	Description
43	3296-5	1	Nut-Lock
44	120-9832-01	1	Traction Frame ASM
45	66-8060	1	Pad-Brake
46	107-1000	1	Arm-Brake
47	92-9698	1	Screw-Shoulder
48	32144-14	4	Screw-HWHTF
49	108-2976	1	Spring-Extension
50	3296-29	1	Nut-Lock, NI
51	323-29	1	Screw-HH
52	32144-4	1	Screw-HWH

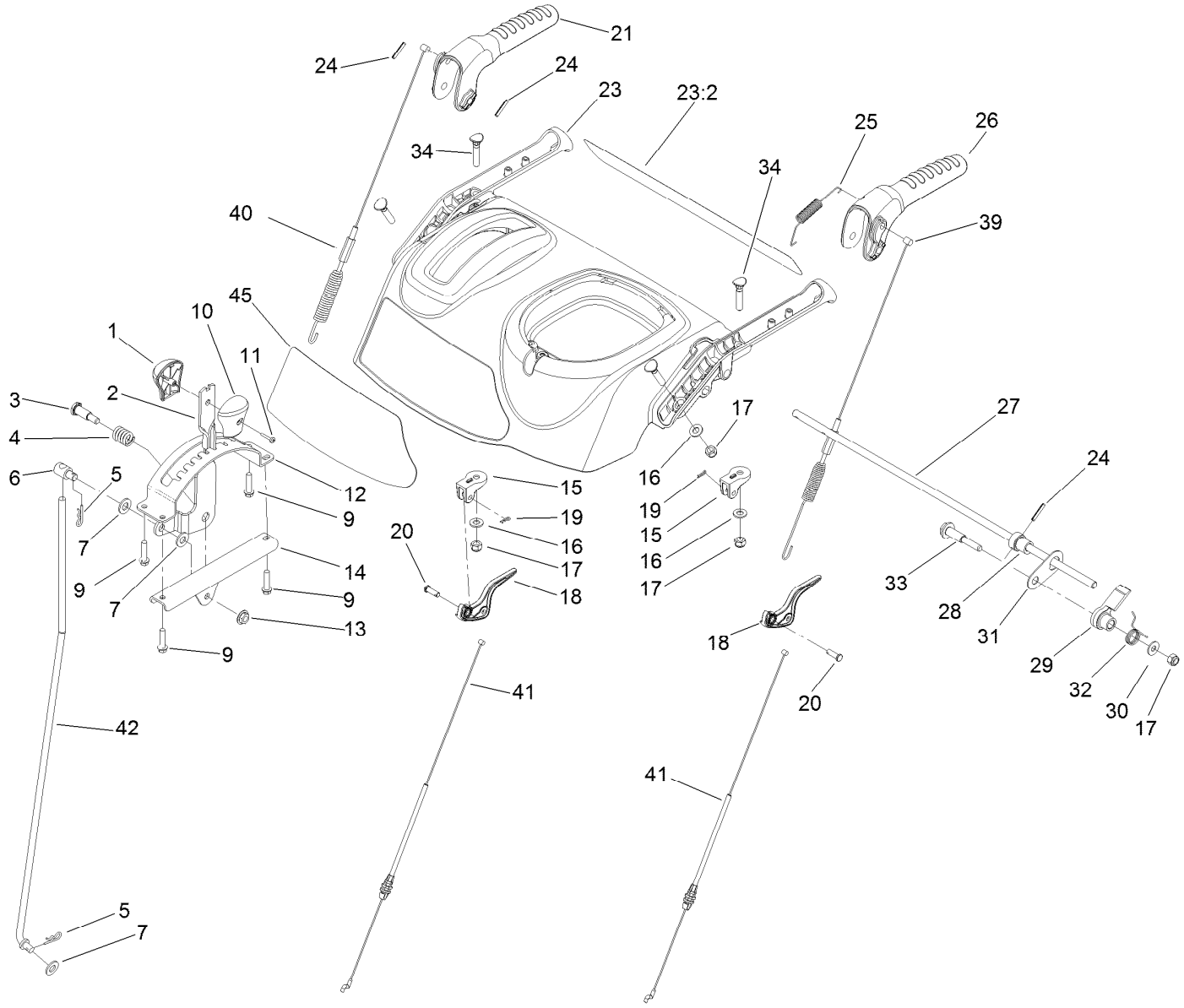

Handle Assembly

Ref.	Part Number	Qty.	Description
1	106-4423	1	Knob-Shift, RH
2	106-7278-03	1	Selector-Speed
3	63-2650	1	Screw-Shoulder
4	108-7313	1	Spring-Compression
5	3290-307	2	Pin-Hair
6	110-3446	1	Trunion-Rod
7	3256-24	3	Washer-Flat
9	46-8092	4	Screw-Plastite
10	105-9999	1	Knob-Shift, LH
11	94-4496	1	Screw-PPH
12	106-7277-03	1	Guide-Selector, Speed
13	32128-13	1	Nut-HHF
14	106-7279-03	1	Mount-Selector, Speed
15	105-9980	2	Mount-Clutch, Lever
16	3256-70	4	Washer-Flat
17	3296-72	5	Nut-Lock, NI
18	106-4505	2	Lever-Clutch
19	108-2992	2	Pin-Hair
20	1-808265	2	Pin-Clevis

Ref.	Part Number	Qty.	Description
21	106-4413	1	Lever-Auger
23	112-6633	1	Panel-Control
23:2	112-6627	1	Decal-Back, Control Panel
24	32121-125	3	Pin-Spring
25	107-3001	1	Spring-Tension
26	106-4410	1	Lever-Traction
27	105-9996	1	Rod-Lockout
28	107-1043	1	Cam-Lockout
29	108-0023	1	Latch-Lockout
30	98-3499	1	Washer-Flat
31	107-3000	1	Link-Lockout
32	108-0024	1	Spring-Torsion
33	106-4412	1	Screw-Shoulder
34	107-3018	4	Screw-Handle
39	120-0132	1	Cable-Traction
40	115-5680	1	Cable-Auger
41	107-8896	2	Cable-Clutch
42	107-1005	1	Rod-Shift
45	117-6042	1	Decal-Control Panel

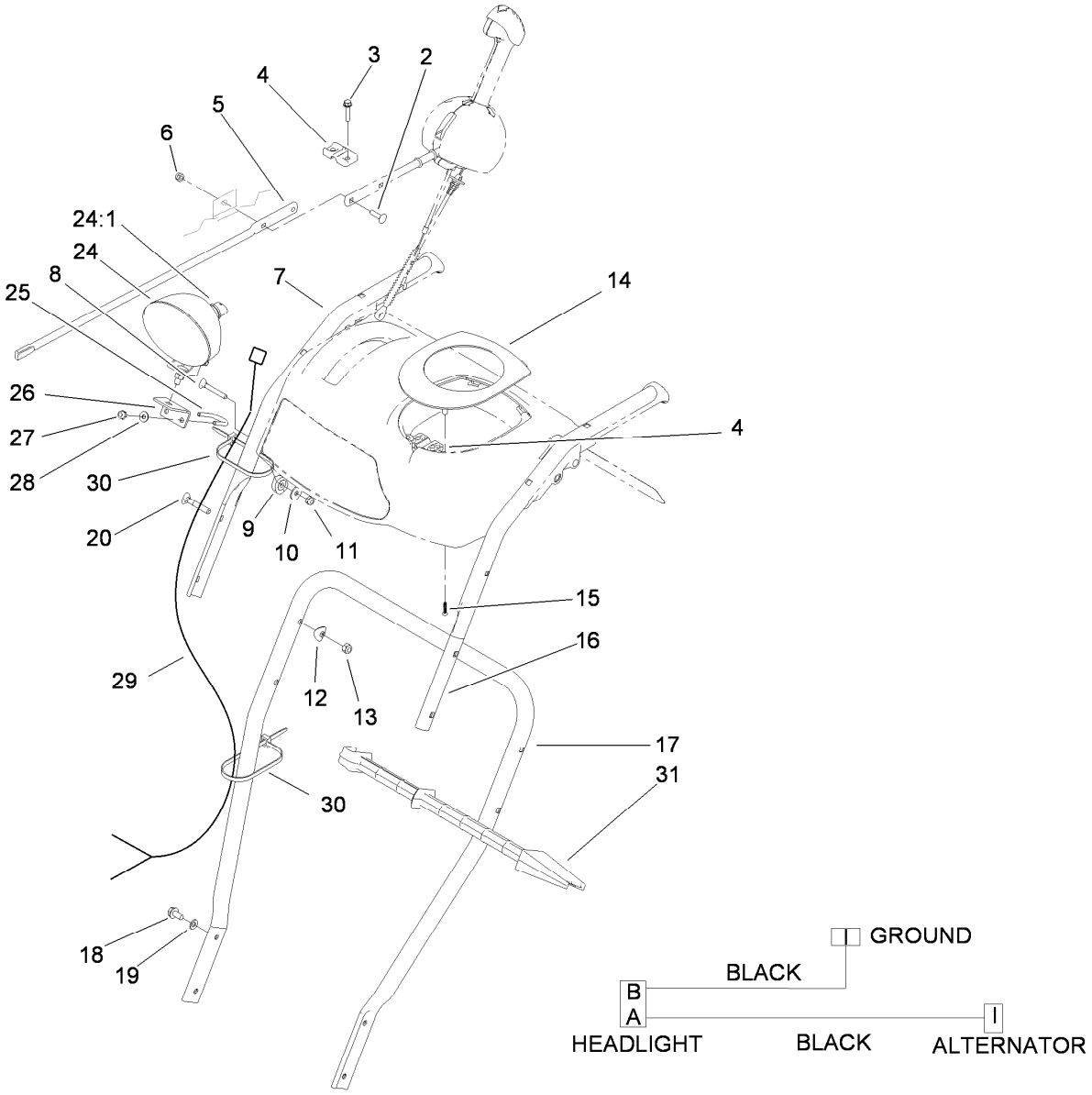

Lower Handle and Headlamp Assembly

Ref.	*Part Number*	*Qty.*	*Description*
2	3229-30	2	Screw-CARR
3	46-8092	2	Screw-Plastite
4	105-9987	2	Support-Rod
5	106-7283	1	Rod-Chute, Front
6	3296-73	2	Nut-Lock, NI
7	108-0038-03	1	Handle-Upper, RH
8	95-4453	2	Screw
9	106-4509	2	Clamp-Cable
10	87-6630	2	Washer-Plain
11	3296-73	2	Nut-Lock, NI
12	107-3844	4	Washer
13	3296-72	4	Nut-Lock, NI
14	106-4586	1	Cover-Panel, Control
15	94-4496	2	Screw-PPH

Ref.	*Part Number*	*Qty.*	*Description*
16	108-0037-03	1	Handle-Upper, LH
17	105-9981-03	1	Handle-Lower
18	32144-14	4	Screw-HWHTF
19	3290-475	4	Washer-Belleville
20	92-2260	4	Screw-Handle
24	106-4510	1	Headlamp ASM
24:1	108-0008	1	Lamp-12 Volt
25	107-3024	1	Clamp
26	107-1020-03	1	Bracket-Light
27	3296-73	2	Nut-Lock, NI
28	3256-1	2	Washer-Flat
29	106-4511	1	Harness-Wire
30	614249	2	Tie-Cable
31	110-3408	1	Stick-Cleanout

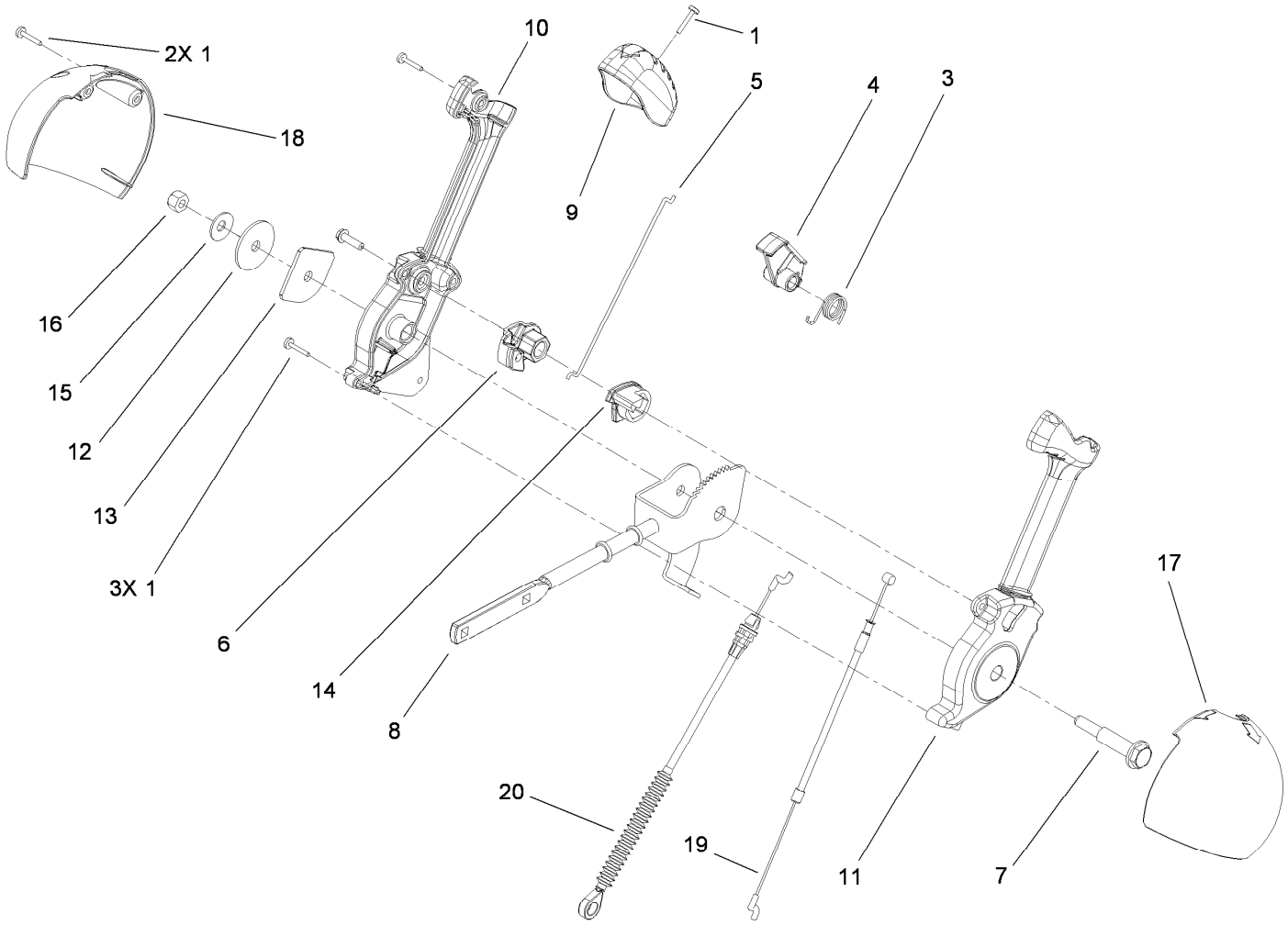

Lever Chute Control Assembly

Ref.	Part Number	Qty.	Description
1	94-4496	6	Screw-PPH
3	105-9982	1	Spring-Torsion
4	105-9984	1	Trigger-Latch
5	105-9985	1	Link-Latch
6	105-9988	1	Lever-Cable, Deflector
7	105-9995	1	Screw-Shoulder
8	106-4479	1	Rod-Control, Chute
9	106-7280	1	Cap-Lever
10	106-7281	1	Lever-Chute Control, RH
11	106-7282	1	Lever-Chute Control, LH

Ref.	Part Number	Qty.	Description
12	107-3002	1	Washer-Nylon
13	106-7295	1	Plate-Friction
14	106-7310	1	Pawl-Latch
15	3290-456	1	Washer-Belleville
16	3296-29	1	Nut-Lock, NI
17	105-9986	1	Cover-Chute Lever, LH
18	106-7292	1	Cover-Chute Lever, RH
19	105-9989	1	Cable-Release, Chute
20	105-9990	1	Cable-Control, Deflector

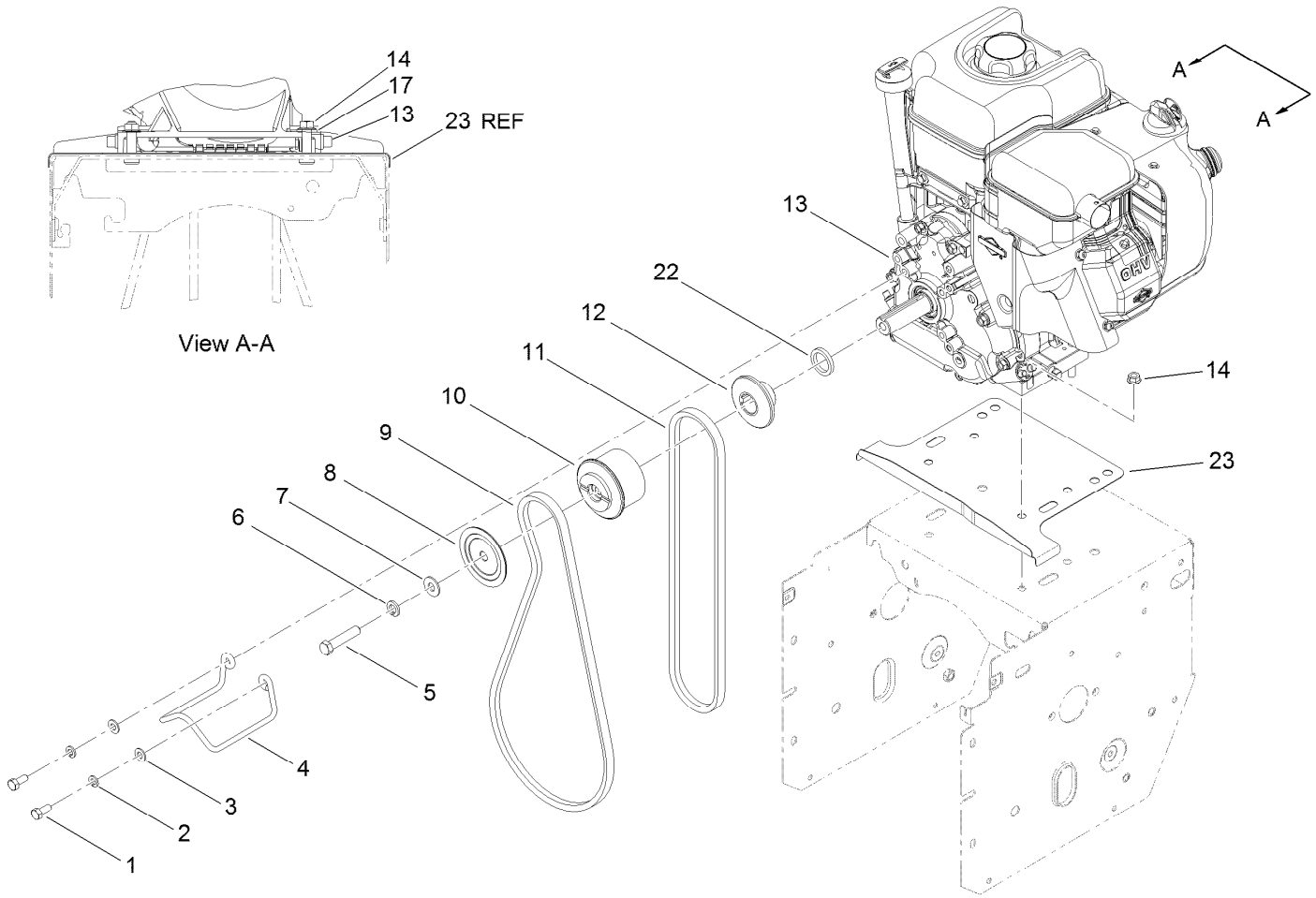

Engine Assembly

Ref.	Part Number	Qty.	Description
1	3210-3	2	Screw-HH
2	3253-4	2	Washer-Lock
3	3256-23	2	Washer-Flat
4	107-3835	1	Guide-Belt
5	3212-8	1	Screw-HH
6	3253-6	1	Washer-Lock
7	3256-4	1	Washer-Flat
8	62-0940	1	Sheave-Half, Impeller
9	106-4498	1	Belt-V
10	106-7333	1	Pulley-Engine, Center
11	94-8812	1	V Belt-Traction
12	106-7334	1	Sheave-Half, Traction
13		1	Engine-Briggs, 20M3140139F1 ●■
14	32128-20	4	Nut-HF
17	3256-2	1	Washer-Flat
22	115-5666	1	Spacer-Hardened
23	117-6022-01	1	Shield-Drive

● Not serviced separately

■ Obtain parts from www.briggsandstratton.com

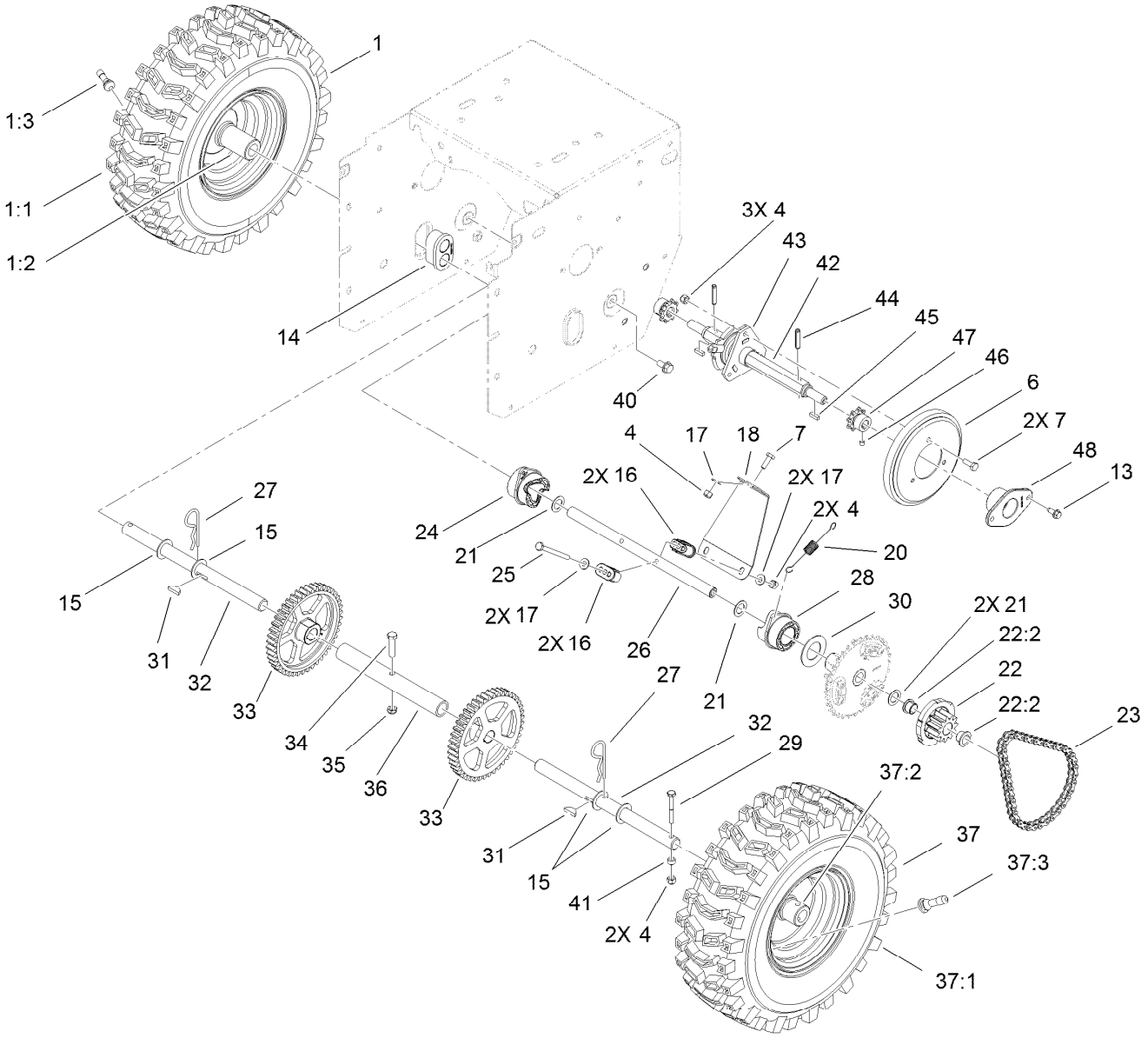

Wheel Clutch Assembly

Ref.	Part Number	Qty.	Description
1		1	RH Wheel And Tire ASM ●
1:1	107-3042	1	Tire
1:2	107-3043	1	Rim-Tire
1:3	232-27	1	Stem-Valve
4	3296-42	8	Nut-Lock, NI
6	119-1567	1	Wheel-Friction
7	321-4	4	Screw-HH
13	32144-10	4	Screw-HWH
14	106-4558	2	Bearing-Axle
15	3-8664	4	Washer-Thrust
16	107-8889	4	Guide-Collar
17	3256-22	5	Washer-Flat
18	107-8892-03	1	Brace-Collar, Shift
20	107-8893	2	Spring-Extension
21	108-0015	4	Washer-Flat
22	107-8894	2	11T Gear ASM
22:2	108-2973	2	Bushing-Flange
23	108-0016	2	Chain-Roller

Ref.	Part Number	Qty.	Description
23	2710-6	2	Link-Connecting
24	107-8888	1	Collar-Shift, RH
25	321-23	2	Screw-HH
26	107-8883	1	Shaft-Intermediate
27	3290-343	2	Pin-Hair
28	107-8887	1	Collar-Shift, LH
29	108-2975	2	Screw-HH
30	107-8891	2	Washer-Thrust
31	3257-7	2	Key-Woodruff
32	107-8898	2	Shaft-Axle
33	106-4572	2	Gear-Axle, 44 Tooth
34	322-17	1	Screw-HH
35	3296-47	1	Nut-Lock, NI
36	106-7259	1	Tube-Axle
37		1	LH Wheel And Tire ASM ●
37:1	107-3042	1	Tire
37:2	107-3043	1	Rim-Tire
37:3	232-27	1	Stem-Valve

● Not serviced separately

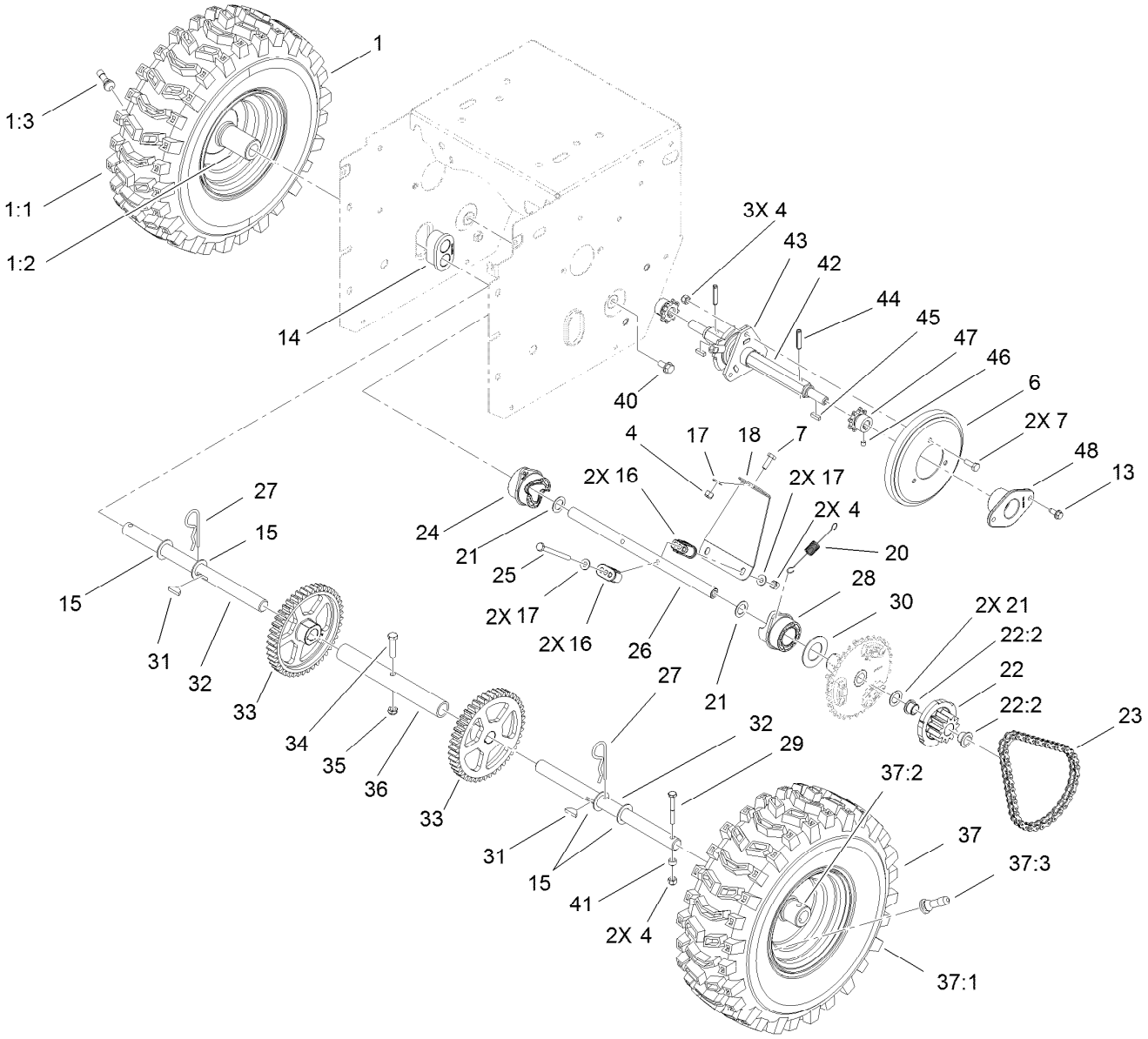

Wheel Clutch Assembly (continued)

Ref.	Part Number	Qty.	Description
40	32144-14	2	Screw-HWHTF
41	55-9370	2	Spacer-Blade, Rotor
42	108-7314	1	Shaft-Hex
43	106-4434	1	Trunion-Hex
44	32121-9	2	Pin-Roll, Slotted
45	94-8850	2	Key-Square
46	3245-32	4	Screw-HSH
47	106-7317	2	Sprocket-8 Tooth
48	108-7319	2	Retainer-Bearing

● Not serviced separately

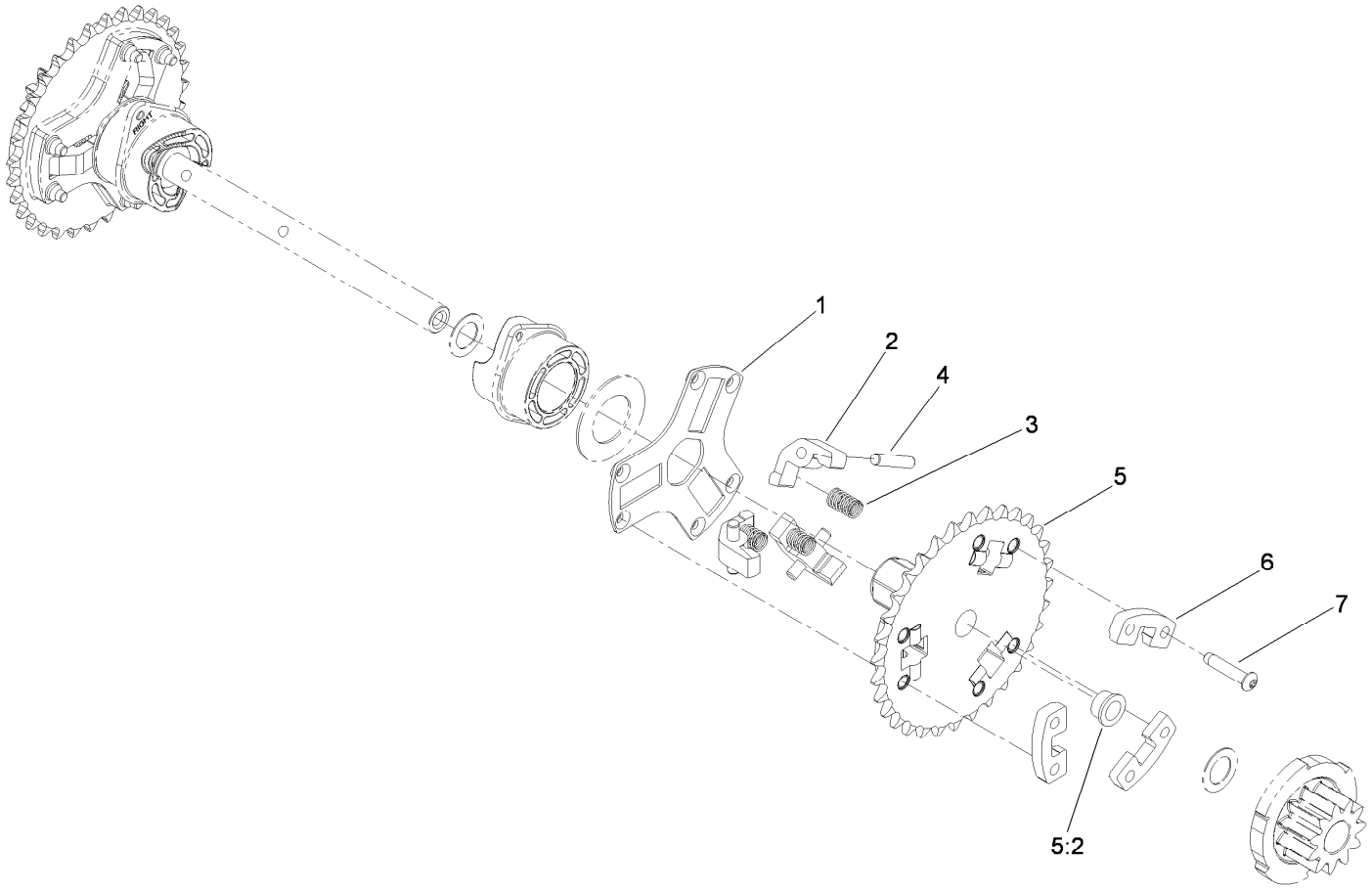

Wheel Clutch Sprocket Assembly

Ref.	*Part Number*	*Qty.*	*Description*
1	107-8886	2	Retainer-Pin, Pawl
2	107-8879	6	Pawl-Clutch
3	107-8885	6	Spring-Compression
4	107-8899	6	Pin-Dowel
5	107-8895	2	32T Sprocket ASM
5:2	108-2973	2	Bushing-Flange
6	107-8880	6	Support-Pawl
7	108-0035	12	Screw-Torx Button Head

Attachments and Accessories

For 38644 Power Max 1028 OXE Snowthrower

Product Name	Model/Part
Tire Chain Kit	107-3813
Snow Cab	107-3814
Weight Kit	107-3815
28 Inch Drift Breaker	107-3817
Toro 2-Stage Cover	490-7466
Plain 2-Stage Cover	490-7467

Notes:

Notes:



Count on it.