Form No. 3372-330 Rev B

41cm Recycler® Lawn Mower

Model No. 21030—Serial No. 312000001 and Up
Model No. 21032—Serial No. 312000001 and Up

Operator's Manual

Contents

Introduction 1
Safety 2
- General Operation 2
- Slope Operation 2
- Children 3
- Service 3
- Sound Pressure 4
- Sound Power 4
- Vibration, Hand/arm 4
- Safety and Instructional Decals 5

Setup 6
- 1 Unfolding the Handle 6
- 2 Assembling the Grass Bag 6
- 3 Filling the Engine with Oil 7

Product Overview 8
- Specifications 8

Operation 9
- Filling the Fuel Tank 9
- Checking the Engine Oil Level 9
- Adjusting the Cutting Height 9
- Starting the Engine 10
- Using the Self-propel Drive (model 21032 only) 11
- Stopping the Engine 11
- Bagging the Clippings 11
- Mowing Tips 12

Maintenance 12
- Recommended Maintenance Schedule(s) 12
- Cleaning the Mower Housing 12
- Cleaning the Air Filter 13
- Adjusting the Self-propel Cable (model 21032 only) 13
- Lubricating the Machine 13
- Changing the Engine Oil 13
- Servicing the Blade 14

Storage 16
Troubleshooting 17

Introduction

Read this information carefully to learn how to operate and maintain your product properly and to avoid injury and product damage. You are responsible for operating the product properly and safely. Keep this manual for future reference.

You may contact Toro directly at www.Toro.com for product and accessory information, help finding a dealer, or to register your product.

Whenever you need service, genuine Toro parts, or additional information, contact an Authorized Service Dealer or Toro Customer Service and have the model and serial numbers of your product ready. Figure 1 identifies the location of the model and serial numbers on the product.

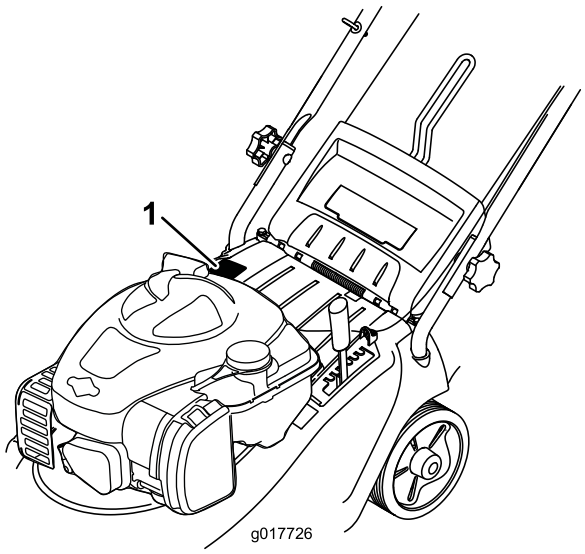

Figure 1

1. Model and serial number plate

Write the product model and serial numbers in the space below:

Model No. _____

Serial No. _____

© 2012—The Toro® Company
8111 Lyndale Avenue South
Bloomington, MN 55420

Register at www.Toro.com.

Original Instructions (EN)
Printed in China
All Rights Reserved

This manual identifies potential hazards and has safety messages identified by the safety alert symbol (Figure 2), which signals a hazard that may cause serious injury or death if you do not follow the recommended precautions.



Figure 2

1. Safety alert symbol

This manual uses 2 words to highlight information. **Important** calls attention to special mechanical information and **Note** emphasizes general information worthy of special attention.

For models with stated engine horsepower, the gross horsepower of the engine was laboratory rated by the engine manufacturer in accordance with SAE J1349. As configured to meet safety, emission, and operating requirements, the actual engine horsepower on this class machine will be significantly lower.

Safety

This cutting machine can amputate hands and feet and throw objects. Failure to observe the following safety instructions could result in serious injury or death.

General Operation

- Read, understand, and follow all instructions on the machine and in the manual(s) before starting.
- Do not put hands or feet near or under the machine.
- Only allow responsible adults, who are familiar with the instructions, to operate this machine.
- Keep in mind that the operator or user is responsible for accidents or hazards occurring to other people or their property.
- Clear the area of objects such as rocks, wire, toys, etc., which could be thrown by the blade or cutting line. Stay behind the handle when the engine is running.
- Be sure the area is clear of bystanders before operating. Stop machine if anyone enters the area.
- Do not operate machine barefooted or while wearing sandals. Always wear substantial footwear and long pants.
- Do not pull machine backward unless absolutely necessary. Always look down and behind before and while moving backward.
- Never direct discharged material toward anyone. Avoid discharging material against a wall or obstruction. Material may ricochet back toward the operator.
- Stop the engine of the machine when crossing surfaces other than grass, and when transporting the machine to and from the area to be cut.
- Stop the blade(s) if the machine has to be tilted for transportation when crossing surfaces other than grass, and when transporting the machine to and from the area to be mowed.
- Do not operate machine without the safety protective devices in place and working.
- Never leave a running machine unattended.
- Stop the engine, wait until the blade comes to a complete stop, and disconnect the spark plug wire before cleaning or unclogging the machine.
- Operate machine only in daylight or good artificial light.
- Do not operate machine while under the influence of alcohol or drugs.
- Never operate machine in wet grass. Always be sure of your footing; walk; never run.
- If the machine should start to vibrate abnormally, stop the engine and check for the cause immediately. Vibration is generally a warning of trouble.
- Always wear eye protection when operating machine.
- See manufacturer's instructions for proper operation and installation of accessories. Only use accessories approved by the manufacturer.

Slope Operation

Slopes are a major factor related to slip and fall accidents, which can result in severe injury. Operation on all slopes require extra caution. If you feel uneasy on a slope, do not mow it.

- Mow across the face of slopes; never up and down. Exercise extreme caution when changing direction on slopes.
- Watch for holes, ruts, bumps, rocks, or other hidden objects. Uneven terrain could cause a slip and fall accident. Tall grass can hide obstacles.
- Do not mow on wet grass or excessively steep slopes. Poor footing could cause a slip and fall accident.
- Do not mow near drop-offs, ditches, or embankments. You could lose your footing or balance.
- When using the machine, always keep both hands on the handlebar.

Children

Tragic accidents can occur if the operator is not alert to the presence of children. Children are often attracted to the machine and the mowing activity. **Never** assume that children will remain where you last saw them.

- Keep children out of the mowing area and under the watchful care of a responsible adult other than the operator.
- Be alert and turn machine off if a child enters the area.
- Never allow children to operate the machine.
- Use extra care when approaching blind corners, shrubs, trees, or other objects that may block your view of a child.

Service

Safe Handling of Gasoline

To avoid personal injury or property damage, use extreme care in handling gasoline. Gasoline is extremely flammable and the vapors are explosive.

- Extinguish all cigarettes, cigars, pipes, and other sources of ignition.
- Use only an approved gasoline container.
- Never remove gas cap or add fuel with the engine running. Allow engine to cool before refueling.
- Never refuel the machine indoors.
- Never store the machine or fuel container where there is an open flame, spark, or pilot light such as on a water heater or on other appliances.
- Never fill containers inside a vehicle or on a truck or trailer bed with a plastic liner. Always place containers on the ground away from your vehicle before filling.
- Remove gas-powered equipment from the truck or trailer and refuel it on the ground. If this is not possible, then refuel such equipment with a portable container, rather than from a gasoline dispenser nozzle.
- Keep the nozzle in contact with the rim of the fuel tank or container opening at all times until fueling is complete. Do not use a nozzle lock-open device.
- If fuel is spilled on clothing, change clothing immediately.
- Never overfill fuel tank. Replace gas cap and tighten securely.

⚠ WARNING

Exhaust contains carbon monoxide, an odorless, deadly poison that can kill you.

Do not run the engine indoors or in an enclosed area.

General Service

- Never operate machine in a closed area.
- Keep all nuts and bolts tight to be sure the equipment is in safe working condition.
- Never tamper with safety devices. Check their proper operation regularly.
- Keep machine free of grass, leaves, or other debris build-up. Clean up oil or fuel spillage and remove any fuel-soaked debris. Allow machine to cool before storing.
- If you strike a foreign object, stop and inspect the machine. Repair, if necessary, before starting.
- Never make any adjustments or repairs with the engine running. Disconnect the spark plug wire and ground against engine to prevent unintended starting.
- Machine blades are sharp. Wrap the blade or wear gloves, and use extra caution when servicing them.
- Do not change the engine governor setting or overspeed the engine.
- Maintain or replace safety and instruction labels, as necessary.
- Keep in mind that the operator or user is responsible for accidents or hazards occurring to other people or their property.
- If gasoline is spilled, do not attempt to start the engine but move the machine away from the area of spillage and avoid creating any source of ignition until the gasoline vapor has dissipated.
- Replace faulty silencers.
- Before using, always visually inspect to see that the blades, blade bolts and cutter assembly are not worn or damaged. Replace worn or damaged blades and bolts in sets to preserve balance.
- Never pick up or carry a machine while the engine is running.
- Stop the engine and disconnect the spark plug wire, make sure that all moving parts have come to a complete stop:
  - Before clearing blockages.
  - Before checking, cleaning, or working on the machine.

  - After striking a foreign object. Inspect the machine for damage and make repairs before restarting and operating the lawnmower.
  - If the machine starts to vibrate abnormally.
  - Whenever you leave the machine.
  - Before refueling.
- Allow the engine to cool before storing in any enclosure.
- Replace worn or damaged parts for safety.
- If the fuel tank has to be drained, this should be done outdoors.
- Local regulations may restrict the age of the operator.
- Always wear ear protection.
- Do not tilt the machine when starting the engine, except if the machine has to be tilted for starting. In this case do not tilt it more than absolutely necessary and lift only the part which is away from the operator.
- Examine the machine regularly and replace worn or damaged parts for safety.

Sound Pressure

This unit has a sound pressure level at the operator's left ear of 84 dBA and right ear of 83 dBA, which includes an Uncertainty Value (K) of 2.5 dBA.

Sound pressure level was determined according to the procedures outlined in EN 836.

Sound Power

This unit has a guaranteed sound power level of 96 dBA and a measured sound power level of 92.6 dBA, which includes an Uncertainty Value (K) of 2.4 dBA.

Sound power level was determined according to the procedures outlined in ISO 11094.

Vibration, Hand/arm

Measured vibration level for right hand = 3.3 m/s^2

Measured vibration level for left hand = 3.4 m/s^2

Uncertainty Value (K) = 1.5 m/s^2

Measured values were determined according to the procedures outlined in EN 836.

Safety and Instructional Decals

Important: **Safety and instruction decals are located near areas of potential danger. Replace damaged or lost decals.**

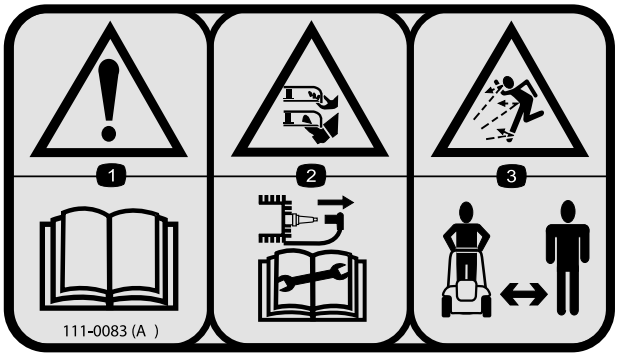

111–0083

1. Warning—read the *Operator's Manual.*
2. Cutting/dismemberment hazard of hand or foot, mower blade; disconnect the spark plug lead and read the *Operator's Manual* before servicing or performing maintenance.
3. Thrown object hazard; keep bystanders a safe distance from the mower.



111-4782

1. Height of cut

Setup

Note: Do not attempt to start the engine until the mower is fully assembled.

1

Unfolding the Handle

No Parts Required

Procedure

1. Carefully unfold the handle, keeping the cables clear of the pivot points so they do not get pinched.

   ⚠ CAUTION

   The handles pass each other like a scissors while folding and unfolding them and can pinch your fingers.

   Keep your fingers clear of the pivot points and crossing handles as you fold of unfold the handles.

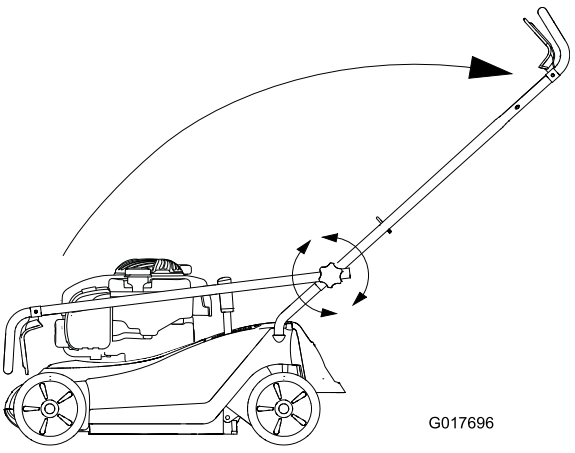

Figure 3

2. Tighten the knobs on the handle to secure it in place.

2

Assembling the Grass Bag

No Parts Required

Procedure

Insert the metal frame into the grassbag fabric and then clip into position (Figure 4).

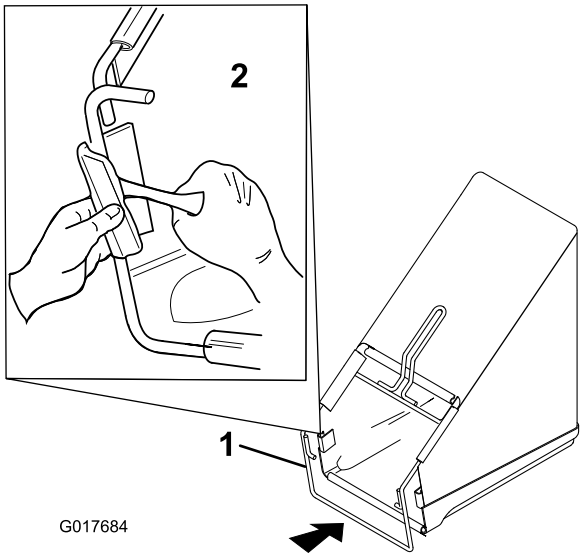

Figure 4

1. Metal frame
2. Clipping the frame to the grassbag

3

Filling the Engine with Oil

No Parts Required

Procedure

Your mower does not come with oil in the engine.

1. Remove the dipstick (Figure 5).

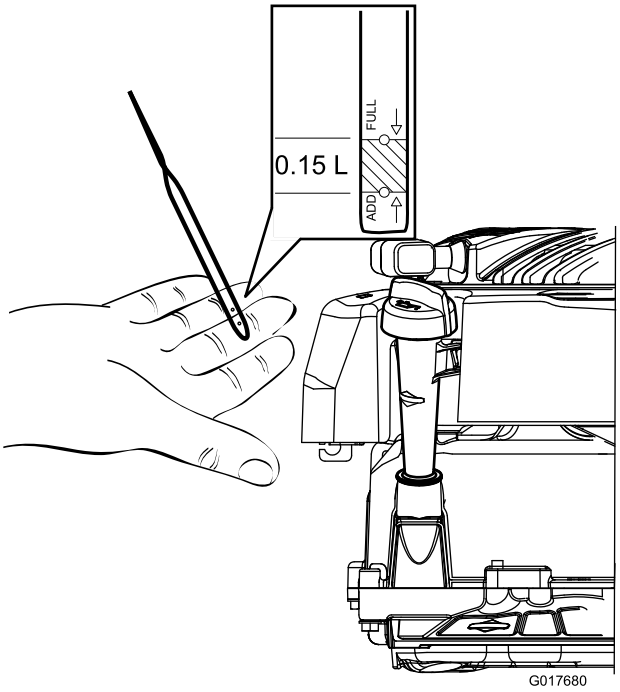

Figure 5

2. Slowly pour oil into the oil fill tube until the oil level reaches the Full line on the dipstick (Figure 5 and Figure 6). Wait 3 minutes after adding oil to check the oil level with the dipstick. Do not overfill. (Max. fill: 0.47 l (16 oz.), type: SAE 30 detergent oil with an API service classification of SF, SG, SH, SJ, SL, or higher.)

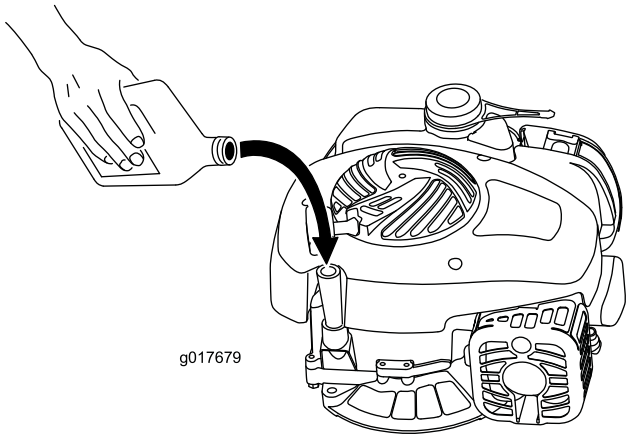

Figure 6

3. Install the dipstick securely.

Important: ***Change the engine oil after the first 5 operating hours;*** **change it yearly thereafter. Refer to Changing the Engine Oil.**

Product Overview

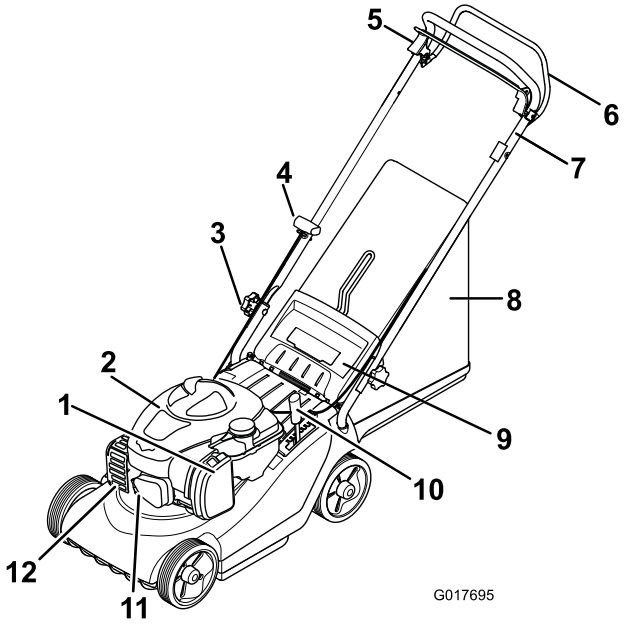

Figure 7

1. Air cleaner
2. Engine cover
3. Handlebar securing knob
4. Recoil start handle
5. Engine stop handle
6. Self-propel handle (model 21032 only)
7. Upper handlebar
8. Grassbag
9. Rear deflector
10. Height of cut adjustor
11. Spark plug lead
12. Exhaust guard

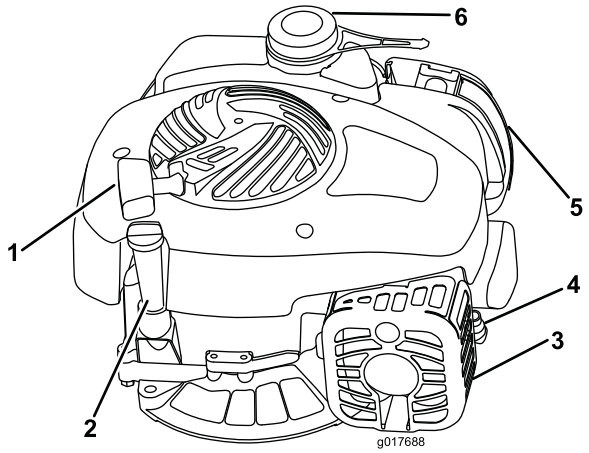

Figure 8

1. Recoil start handle
2. Oil filler cap and dipstick
3. Exhaust guard
4. Spark plug lead
5. Air cleaner
6. Fuel cap

Specifications

Model	21030	21032
Weight	30 kg	32 kg
Length	137 cm	137 cm
Width	47.5 cm	47.5 cm
Height	105 cm	105 cm
Width of cut	41 cm	41 cm
Height-of-cut range (7 positions)	13 to 65 mm	13 to 65 mm

Operation

Filling the Fuel Tank

⚠ DANGER

Gasoline is extremely flammable and explosive. A fire or explosion from gasoline can burn you and others.

- **To prevent a static charge from igniting the gasoline, place the container and/or mower directly on the ground before filling, not in a vehicle or on an object.**
- **Fill the tank outdoors when the engine is cold. Wipe up spills.**
- **Do not handle gasoline when smoking or around an open flame or sparks.**
- **Store gasoline in an approved fuel container, out of the reach of children.**

Fill the fuel tank with fresh unleaded regular gasoline from a major name-brand service station.

Use unleaded regular gasoline suitable for automotive use (87 pump octane minimum). Leaded regular gasoline may be used if unleaded regular is not available.

Note: Never use methanol, gasoline containing methanol, or gasoline containing more than 10% ethanol because the fuel system could be damaged. Do not mix oil with gasoline.

Important: To reduce starting problems, add fuel stabilizer to the fuel all season, mixing it with gasoline less than 30 days old.

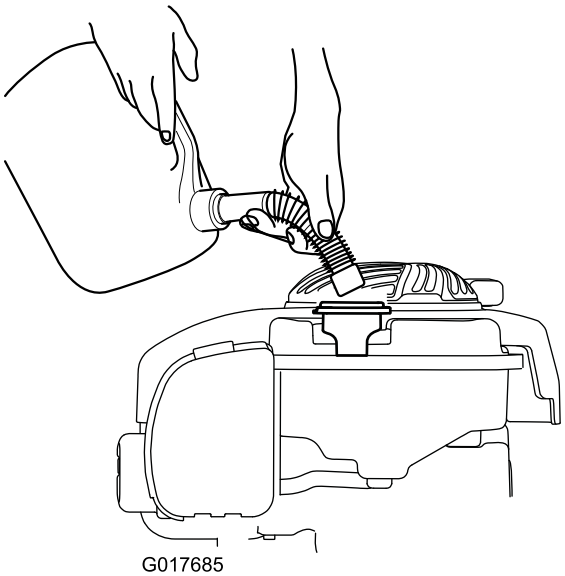

Figure 9

Checking the Engine Oil Level

Service Interval: Before each use or daily

1. Remove the dipstick, wipe it clean, and fully install the dipstick.
2. Remove the dipstick and check the oil level (Figure 10). If the oil level is below the Add mark on the dipstick, slowly pour oil into the oil fill tube to raise the oil level to the Full mark on the dipstick. Wait 3 minutes after adding oil to check the oil level with the dipstick (Max. fill: 20 oz. (0.59 l), type: SAE 30 detergent oil with an API service classification of SF, SG, SH, SJ, SL, or higher).

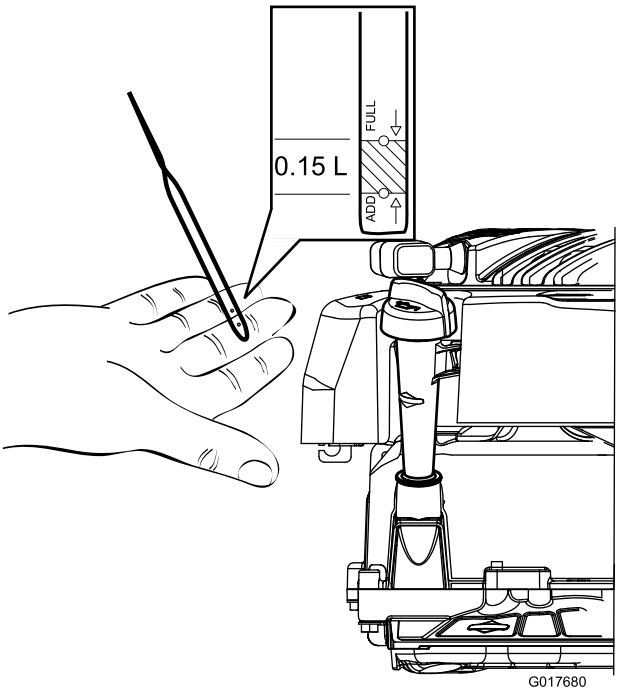

Figure 10

3. Install the dipstick.

Adjusting the Cutting Height

⚠ WARNING

Adjusting the cutting height may bring you into contact with the moving blade, causing serious injury.

- **Stop the engine and wait for all moving parts to stop.**
- **Do not put your fingers under the housing when adjusting the cutting height.**

⚠ CAUTION

If the engine has been running, the muffler will be hot and can severely burn you. Keep away from the hot muffler.

To adjust the height of cut:

1. Grip the lever and pull sideways to disengage it from the locking notch (Figure 11).

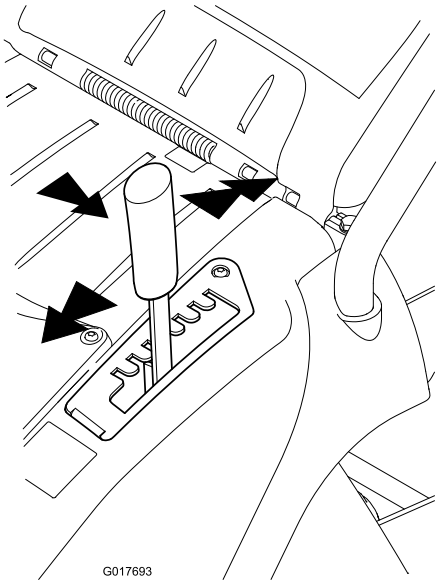

Figure 11

2. Push forwards to lower or pull backwards to raise the height of cut (Figure 11).
3. Release the lever at the required position and ensure it locks firmly into one of the seven setting notches (Figure 11).

Starting the Engine

⚠ WARNING

Allow the motor to come to a complete stop before starting it. Failure to do this could damage the motor making the mower unsafe.

1. Hold the engine stop handle against the handlebar (Figure 12).

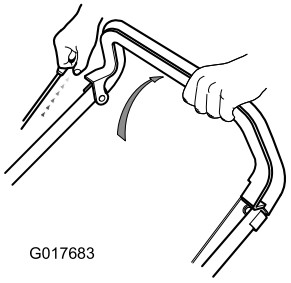

Figure 12

2. Pull the recoil start handle (Figure 12).

Note: If the machine does not start after several attempts, contact an Authorized Service Dealer.

Using the Self-propel Drive (model 21032 only)

To operate the self-propel drive, squeeze the self-propel drive bar toward the handle and hold it Figure 13).

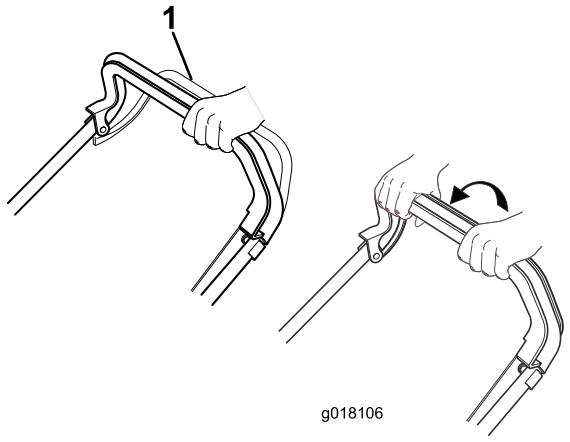

Figure 13

1. Self-propel drive bar

To disengage the self-propel drive, release the self-propel drive bar.

Note: The maximum self-propel ground speed is fixed.

Stopping the Engine

To stop the engine, release the engine stop handle.

Important: When you release the engine stop handle, both the engine and the blade should stop within 3 seconds. If they do not stop properly, stop using your mower immediately and contact an Authorized Service Dealer.

Bagging the Clippings

Install the grass bag to collect the clippings.

1. Lift the rear door, remove the mulch plug (Figure 15), and install the grass bag onto the lugs (Figure 14).

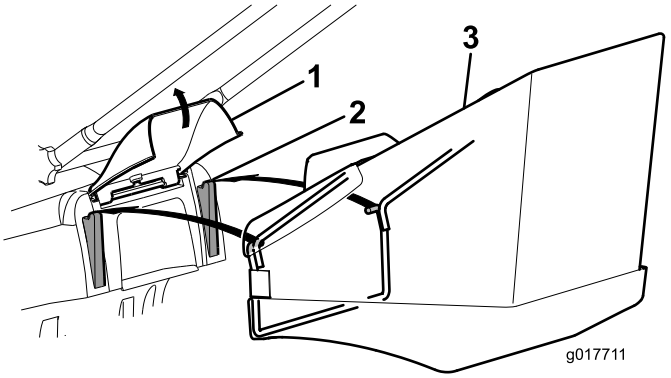

Figure 14

1. Rear door
2. Lug
3. Grass bag

2. Release the rear door.
3. Mow with the grass bag attached.
4. When the bag is full, stop the motor, remove the grass bag from the mower, and empty the contents.

Note: To convert from bagging to recycling, remove the grass bag, replace the mulch plug you removed in Step 1, and lower the rear door (Figure 15).

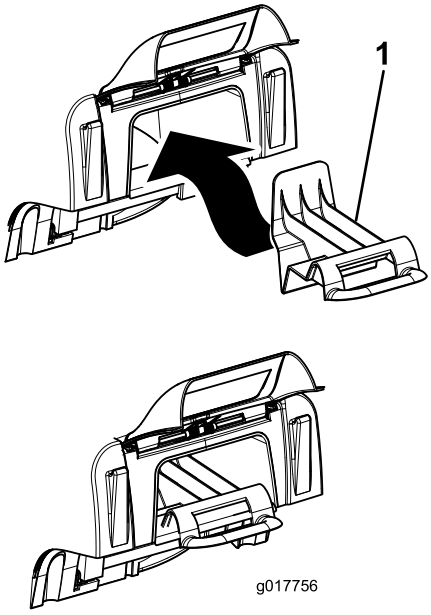

Figure 15

1. Mulch plug

Mowing Tips

Follow these instruction when cutting grass for the best cutting results and lawn appearance.

- Maintain a **sharp blade** throughout the mowing season.
- **Only mow dry grass.** Wet grass tends to clump on the yard and may cause the mower to plug up or the motor to stall. They may also be slippery to walk on and could cause you to slip and fall.
- While cutting single swaths, ensure an overlap of about 4 cm.
- When cutting very tall grass, you may want to first mow at the highest height-of-cut setting and a slower walking speed; then mow again at a lower setting for best lawn appearance.
- If the finished cut lawn appearance is unsatisfactory, try one or more of the following:
  - Sharpen the blade.
  - Walk at a slower pace while mowing.
  - Raise the height-of-cut setting on your mower.
  - Cut the grass more frequently.
  - Overlap cutting swaths instead of cutting a full swath with each pass.

Maintenance

Toro has designed this product to give you years of trouble-free use. Should it need service, bring the product to an Authorized Toro Service Dealer.

Note: Determine right and left side from normal operating position.

Recommended Maintenance Schedule(s)

Maintenance Service Interval	Maintenance Procedure
Before each use or daily	• Check the engine oil level. • Clean the mower housing.
Every 25 hours	• Clean the air filter. • Check the self-propel cable and adjust if necessary (model 21032 only). • Lubricate the machine. • Sharpen the blade.
Every 50 hours	• Change the engine oil.
Every 2 years	• Replace the blade.

Cleaning the Mower Housing

Service Interval: Before each use or daily

After each use, clean the mower housing.

Before cleaning, stop the motor, wait for all moving parts to stop, and disconnect the spark plug lead.

Important: Do not clean the mower with water. Moisture can get trapped in the mower and may cause corrosion of internal parts.

- Clean the underside of the mower housing. Remove dirt and grass clippings with a hardwood scraper/brush (Figure 16).

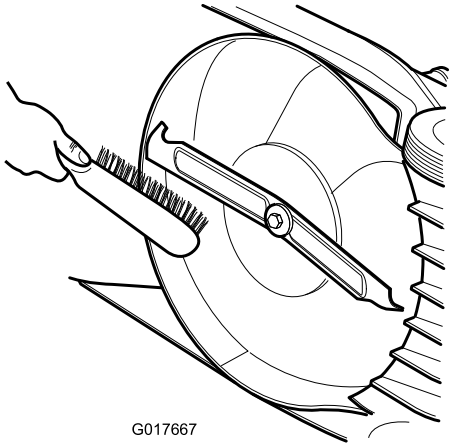

Figure 16

- Remove the debris from the housing vents along the top of the mower and from the mower housing.

Cleaning the Air Filter

Service Interval: Every 25 hours

1. Undo the latches that hold the air filter cover to the engine (Figure 17).

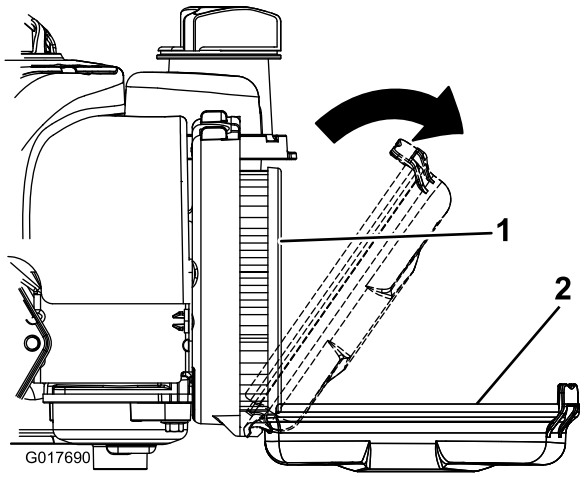

Figure 17

1. Paper element
2. Cover

2. Remove and inspect the air filter.
3. If it is extremely dirty, replace it.
4. Replace the element and close the cover, securing the latches to the engine.

Adjusting the Self-propel Cable (model 21032 only)

Service Interval: Every 25 hours

Ensure that the self-propel drive bar is positioned 55–70 mm from the handlebar by adjusting the self-propel cable (Figure 18).

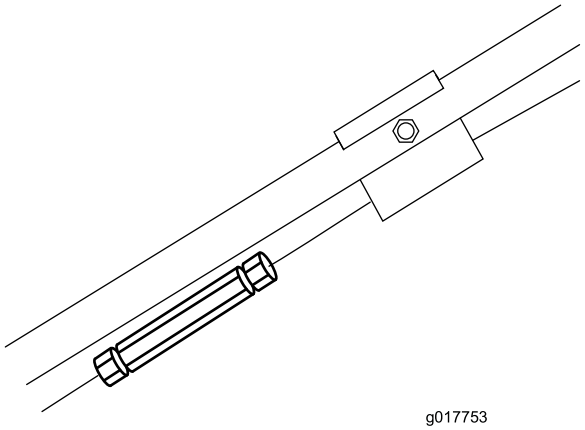

Figure 18

Lubricating the Machine

Service Interval: Every 25 hours

Lubricate the wheels, linkages, and pivot points with engine oil (Figure 19).

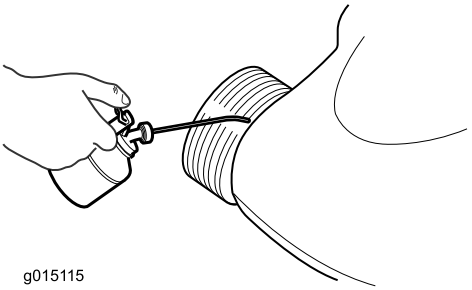

Figure 19

Changing the Engine Oil

Service Interval: Every 50 hours

1. Drain the fuel by running the engine until the fuel tank is empty.
2. Disconnect the spark plug lead.
3. Allow the engine to cool.
4. Tip the mower on its right side, ensuring that the air cleaner faces upwards to prevent engine damage.
5. Remove the dipstick and drain the oil into a suitable container.
6. Slowly pour oil into the oil fill tube until the oil level reaches the Full line on the dipstick (Figure 20). Wait 3 minutes after adding oil to check the oil level with the dipstick. Do not overfill. (Max. fill: 0.47 l (16 oz.), type: SAE 30 detergent oil with an API service classification of SF, SG, SH, SJ, SL, or higher.)

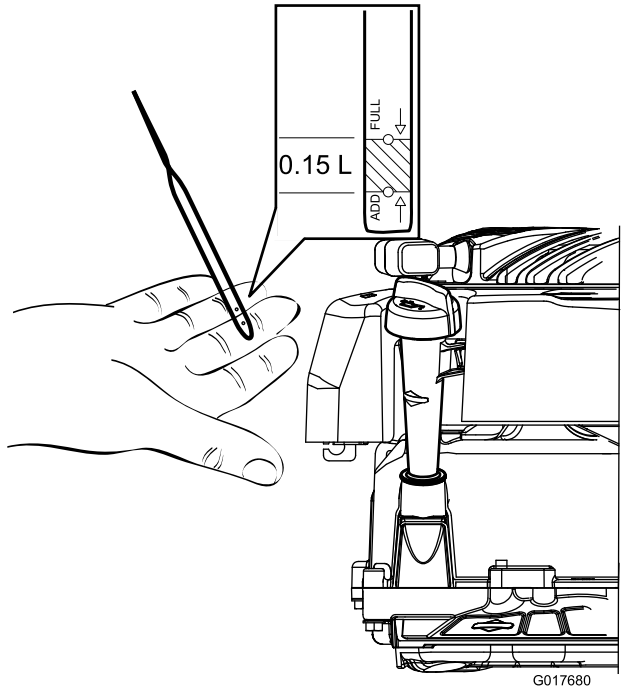

Figure 20

7. Install the dipstick securely.

Servicing the Blade

Always mow with a sharp blade. As sharp blade cuts the grass evenly, without tearing or shredding the grass.

When you replace the blade, use only genuine Toro replacement blades.

⚠ WARNING

Someone could accidentally start the engine and cause a serious injury to the operator or to bystanders.

Do not attempt to inspect, remove, or replace the blade without first disconnecting the spark plug lead.

1. Stop the engine and wait for all moving parts to stop.
2. Disconnect the spark plug lead (Figure 21).

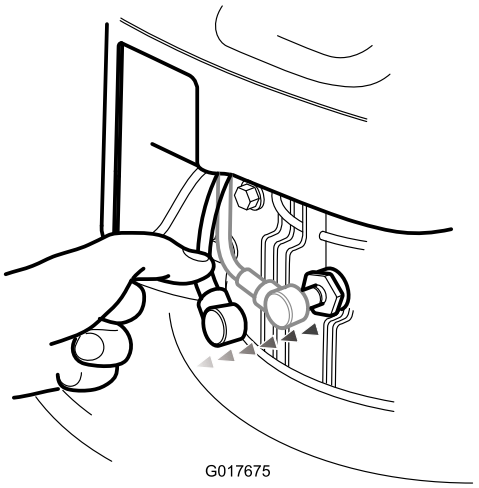

Figure 21

3. Tip the mower onto its side.
4. Carefully examine the blade for sharpness and wear, especially where the flat and curved parts of the blade meet. If you notice wear, replace the blade.

   Note: For best performance, install a new blade before the mowing season begins. During the season, file down small nicks on the blade to maintain its cutting edge.

⚠ DANGER

A worn or damaged blade could break and a piece of blade could be thrown in the operator's or bystander's direction, causing serious personal injury or death.

Inspect the blade periodically for wear or damage, and replace a worn or damaged blade.

Removing the Blade

1. Grasp the end of the blade (Figure 22) with a rag or thickly padded glove.

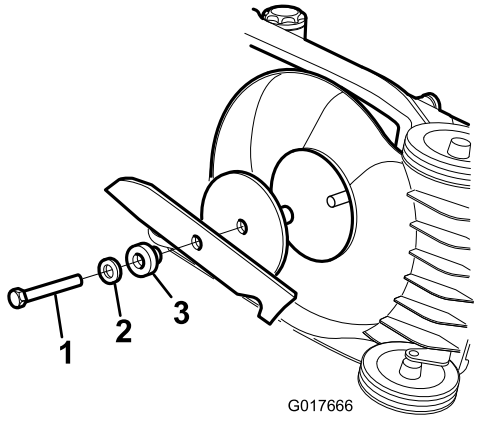

Figure 22

1. Blade bolt
2. Washer
3. Distance piece

2. Remove the blade bolt and the blade.

Important: If the blade adapter comes off, ensure that you install it before installing the blade and blade bolt. Operating the mower without the blade adapter will damage the mower.

Sharpening the Blade

Service Interval: Every 25 hours

Use a file to sharpen the top side of the blade and maintain the original cutting angle (Figure 23).

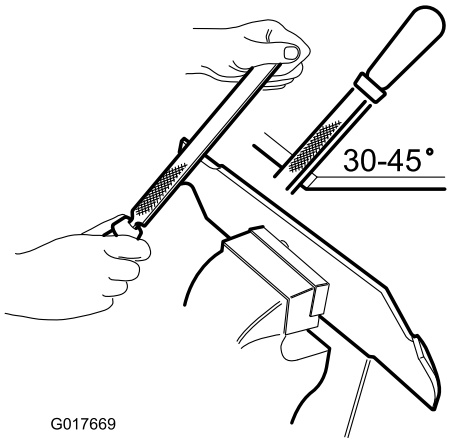

Figure 23

Note: The blade will remain balanced if you remove the same amount of material from both cutting edges.

Important: Check the balance of the blade by putting it on a blade balancer. You can purchase an inexpensive balancer at a hardware store. A balanced blade stays in a horizontal position; an unbalanced blade settles to the heavy side (Figure 24). If the blade is not balanced, file more metal off the cutting edge on the heavy end of the blade.

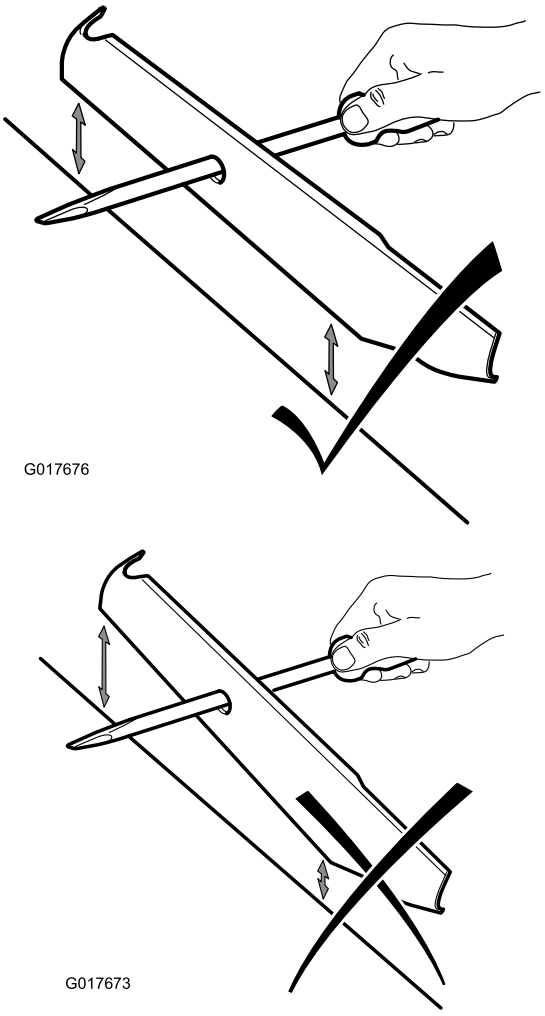

Figure 24

Installing the Blade

Service Interval: Every 2 years

Install a sharp, balanced blade and the blade bolt. The sail part of the blade must point toward the top of the mower housing to ensure correct installation. Tighten the blade bolt to 54 N-m (Figure 22).

Important: If the blade is excessively worn or damaged, replace the blade.

Storage

1. Clean the mower housing.
2. Check the condition of the blade.
3. Fold the handle as shown in Figure 25.

   Important: Ensure that you do not crimp the control cables as you fold the handle.

   ⚠ CAUTION

   The handles pass each other like a scissors while folding and unfolding them and can pinch your fingers.

   Keep your fingers clear of the pivot points and crossing handles as you fold of unfold the handles.

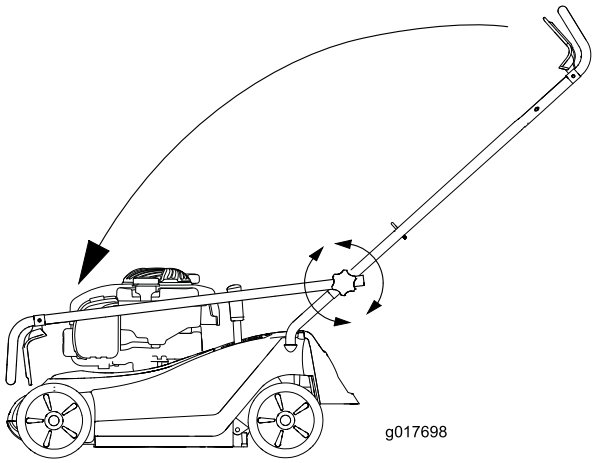

Figure 25

4. Store the mower in a cool, clean, and dry place away from children.
5. Cover the mower to keep it clean and protected.

Troubleshooting

Problem	Possible Cause	Corrective Action
The engine does not start	1. The wire is not connected to the spark plug.	1. Connect the wire to the spark plug.
	2. The fuel cap vent hole is plugged.	2. Clean the fuel cap vent hole or replace the fuel cap.
	3. The spark plug is pitted, fouled, or the gap is incorrect.	3. Check the spark plug and adjust the gap if necessary. Replace the spark plug if it is pitted, fouled, or cracked.
	4. The fuel tank is empty or the fuel system contains stale fuel.	4. Drain and/or fill the fuel tank with fresh gasoline. If the problem persists, contact an Authorized Service Dealer.
The engine starts hard or loses power	1. The fuel cap vent hole is plugged.	1. Clean the fuel cap vent hole or replace the fuel cap.
	2. The air filter element is dirty and is restricting the air flow.	2. Clean the air filter pre-cleaner and/or replace the paper air filter.
	3. The underside of the machine contains clippings and debris.	3. Clean under the machine.
	4. The spark plug is pitted, fouled, or the gap is incorrect.	4. Check the spark plug and adjust the gap if necessary. Replace the spark plug if it is pitted, fouled, or cracked.
	5. The engine oil level is too low, too high, or excessively dirty.	5. Check the engine oil. Change the oil if it is dirty; add or drain the oil to adjust the oil level to the Full mark on the dipstick.
	6. The fuel tank contains stale fuel.	6. Drain and fill the fuel tank with fresh gasoline.
The engine runs rough	1. The wire is not connected to the spark plug.	1. Connect the wire to the spark plug.
	2. The air filter element is dirty and is restricting the air flow.	2. Clean the air filter pre-cleaner and/or replace the paper air filter.
	3. The spark plug is pitted, fouled, or the gap is incorrect.	3. Check the spark plug and adjust the gap if necessary. Replace the spark plug if it is pitted, fouled, or cracked.
The machine or engine vibrates excessively	1. The underside of the machine housing contains clippings and debris.	1. Clean under the machine housing.
	2. The engine mounting bolts are loose.	2. Tighten the engine mounting bolts.
	3. The blade mounting nuts are loose.	3. Tighten the blade mounting nuts.
	4. The blade is bent or is out of balance.	4. Balance the blade. If the blade is bent, replace it.
There is an uneven cutting pattern	1. You are mowing in the same pattern repeatedly.	1. Change the mowing pattern.
	2. The underside of the machine housing contains clippings and debris.	2. Clean under the machine housing.
	3. The blade is dull.	3. Sharpen and balance the blade.
The machine does not self-propel	1. There is debris under the belt cover.	1. Clean the debris from under the belt cover.
	2. The self-propel drive cable is out of adjustment or is damaged.	2. Adjust the self-propel drive cable. Replace the cable if necessary.

European Privacy Notice

The Information Toro Collects
Toro Warranty Company (Toro) respects your privacy. In order to process your warranty claim and contact you in the event of a product recall, we ask you to share certain personal information with us, either directly or through your local Toro company or dealer.

The Toro warranty system is hosted on servers located within the United States where privacy law may not provide the same protection as applies in your country.

BY SHARING YOUR PERSONAL INFORMATION WITH US, YOU ARE CONSENTING TO THE PROCESSING OF YOUR PERSONAL INFORMATION AS DESCRIBED IN THIS PRIVACY NOTICE.

The Way Toro Uses Information
Toro may use your personal information to process warranty claims, to contact you in the event of a product recall and for any other purpose which we tell you about. Toro may share your information with Toro's affiliates, dealers or other business partners in connection with any of these activities. We will not sell your personal information to any other company. We reserve the right to disclose personal information in order to comply with applicable laws and with requests by the appropriate authorities, to operate our systems properly or for our own protection or that of other users.

Retention of your Personal Information
We will keep your personal information as long as we need it for the purposes for which it was originally collected or for other legitimate purposes (such as regulatory compliance), or as required by applicable law.

Toro's Commitment to Security of Your Personal Information
We take reasonable precautions in order to protect the security of your personal information. We also take steps to maintain the accuracy and current status of personal information.

Access and Correction of your Personal Information
If you would like to review or correct your personal information, please contact us by email at legal@toro.com.

Intl Dist List

Distributor:	Country:	Phone Number:
Atlantis Su ve Sulama Sisstemleri Lt	Turkey	90 216 344 86 74
Balama Prima Engineering Equip.	Hong Kong	852 2155 2163
B-Ray Corporation	Korea	82 32 551 2076
Casco Sales Company	Puerto Rico	787 788 8383
Ceres S.A.	Costa Rica	506 239 1138
CSSC Turf Equipment (pvt) Ltd.	Sri Lanka	94 11 2746100
Cyril Johnston & Co.	Northern Ireland	44 2890 813 121
Equiver	Mexico	52 55 539 95444
Femco S.A.	Guatemala	502 442 3277
G.Y.K. Company Ltd.	Japan	81 726 325 861
Geomechaniki of Athens	Greece	30 10 935 0054
Guandong Golden Star	China	86 20 876 51338
Hako Ground and Garden	Sweden	46 35 10 0000
Hako Ground and Garden	Norway	47 22 90 7760
Hayter Limited (U.K.)	United Kingdom	44 1279 723 444
Hydroturf Int. Co Dubai	United Arab Emirates	97 14 347 9479
Hydroturf Egypt LLC	Egypt	202 519 4308
Ibea S.P.A.	Italy	39 0331 853611
Irriamc	Portugal	351 21 238 8260
Irrigation Products Int'l Pvt Ltd.	India	86 22 83960789
Jean Heybroek b.v.	Netherlands	31 30 639 4611
Maquiver S.A.	Colombia	57 1 236 4079
Maruyama Mfg. Co. Inc.	Japan	81 3 3252 2285
Metra Kft	Hungary	36 1 326 3880
Mountfield a.s.	Czech Republic	420 255 704 220
Munditol S.A.	Argentina	54 11 4 821 9999
Oslinger Turf Equipment SA	Ecuador	593 4 239 6970
Oy Hako Ground and Garden Ab	Finland	358 987 00733
Parkland Products Ltd.	New Zealand	64 3 34 93760
Prochaska & Cie	Austria	43 1 278 5100
RT Cohen 2004 Ltd.	Israel	972 986 17979
Riversa	Spain	34 9 52 83 7500
Sc Svend Carlsen A/S	Denmark	45 66 109 200
Solvert S.A.S.	France	33 1 30 81 77 00
Spypros Stavrinides Limited	Cyprus	357 22 434131
Surge Systems India Limited	India	91 1 292299901
T-Markt Logistics Ltd.	Hungary	36 26 525 500
Toro Australia	Australia	61 3 9580 7355
Toro Europe NV	Belgium	32 14 562 960

The Toro Warranty

Conditions and Products Covered

The Toro Company and its affiliate, Toro Warranty Company, pursuant to an agreement between them, jointly promise to the original purchaser* to repair the Toro Products listed below if defective in materials or workmanship.

The following time periods apply from the date of purchase:

Products	**Warranty Period**
Walk Power Mowers	
• Cast Deck	5 years Residential Use[2] 45 Days Commercial Use
• Engine	5 years GTS Promise See engine manufacturer's warranty[1]
• Steel Deck	2 years Residential Use[2] 45 Days Commercial Use
• Engine	2 years GTS Promise See engine manufacturer's warranty[1]
Electric Hand Held Products	2 year limited warranty
Snowthrowers	
• Single Stage	2 years Residential Use[2] 45 Days Commercial Use
• Two Stage	2 years Residential Use[2] 45 Days Commercial Use
• Electric	2 years Residential Use[2]
All Ride-On Units Below	
• Engine	See engine manufacturer's warranty[1] 1 year Parts only
• Attachments	1 year
Rear Engine Riders	2 years Residential Use[2] 90 Days Commercial Use
Lawn & Garden Tractors	2 years Residential Use[2] 90 Days Commercial Use
TimeCutter Z Mowers	3 years Residential Use[2] 30 Days Commercial Use
TITAN Mowers	3 years or 240 hours[3]
• Frame	Lifetime (original owner only)[4]
TITAN MX Mowers	3 years or 400 hours[3]
• Frame	Lifetime (original owner only)[4]
Z Master Mowers — 2000 Series	5 years or 1200 hours[3]
• Frame	Lifetime (original owner only)[4]

*Original Purchaser means the person who originally purchased the Toro Product.

[1]Some engines used on Toro Products are warranted by the engine manufacturer.

[2]Residential use means use of the product on the same lot as your home. Use at more than one location is considered commercial use and the commercial use warranty would apply.

[3]Whichever occurs first.

[4]Lifetime Frame Warranty - If the main frame, consisting of the parts welded together to form the tractor structure that other components such as the engine are secured to, cracks or breaks in normal use, it will be repaired or replaced, at Toro's option, under warranty at no cost for parts and labor. Frame failure due to misuse or abuse and failure or repair required due to rust or corrosion are not covered.

This warranty includes the cost of parts and labor, but you must pay transportation costs.

Warranty may be denied if the hour meter is disconnected, altered, or shows signs of being tampered with.

Owner Responsibilities

You must maintain your Toro Product by following the maintenance procedures described in the *Operator's Manual*. Such routine maintenance, whether performed by a dealer or by you, is at your expense.

Instructions for Obtaining Warranty Service

If you think that your Toro Product contains a defect in materials or workmanship, follow this procedure:

1. Contact your seller to arrange service of the product. If for any reason it is impossible for you to contact your seller, you may contact any Toro Authorized Distributor to arrange service.
2. Bring the product and your proof of purchase (sales receipt) to the Service Dealer. If for any reason you are dissatisfied with the Service Dealer's analysis or with the assistance provided, contact us at:

   Customer Care Department, RLC Division
   The Toro Company
   8111 Lyndale Avenue South
   Bloomington, MN 55420-1196
   Manager: Technical Product Support: 001–952–887–8248

   See attached Distributor List

Items and Conditions Not Covered

This express warranty does not cover the following:

- Cost of regular maintenance service or wear parts, such as blades, rotor blades (paddles), scraper blades, belts, fuel, lubricants, oil changes, spark plugs, cable/linkage or brake adjustments
- Any product or part which has been altered or misused and requires replacement or repair due to accidents or lack of proper maintenance
- Repairs necessary due to failure to use fresh fuel (less than one month old), or failure to properly prepare the unit prior to any period of non-use over one month
- Engine and transmission. These are covered by the appropriate manufacturer's guarantees with separate terms and conditions

All repairs covered by these warranties must be performed by an Authorized Toro Service Dealer using Toro approved replacement parts.

General Conditions

The purchaser is covered by the national laws of each country. The rights to which the purchaser is entitled with the support of these laws are not restricted by this warranty.