Spellbrook, Bishop's Stortford, Herts. CM23 4BU, England.
Telephone: 01279 723444 Fax: 01279 723821
E-mail: hayter.sales@toro.com / uk.service@toro.com Web: www.toro.com / www.hayter.co.uk

FITTING, OPERATION INSTRUCTION SHEET & PARTS LIST
DELUXE SEAT KIT MODEL 02909
For CT2120 & CT2140
Models 30655 & 30656
ORIGINAL VERSION (EN)
FROM SERIAL NO 312000001

CONTENTS

Contents	Page No.
Introduction	1
Safety precautions	2
Specifications	2
Delivery checklist	2
Delivery checklist diagram	3
Fittings instructions	3 - 4
Operating instructions	4
Spare parts	4
Maintenance	5
Notes	5
Warranty	6

INTRODUCTION

This kit provides a Deluxe seat with armrests and mechanical suspension unit with a seat switch for connection to the control system. This kit is suitable for the CT2120/2140 only.

This instruction sheet should be regarded as part of the machine, as it gives essential information regarding machine safety, specifications, fitting instructions, operating instructions and maintenance.

For all other information refer to your Operator's Manual and Parts List.

In pursuit of continuous product development, TORO reserve the right to alter specifications without notice.

Left and Right : Throughout this manual refers to the mower when looking in the direction of forward travel.

SAFETY PRECAUTIONS

THIS SYMBOL MEANS BE ALERT! YOUR SAFETY IS INVOLVED.
EXERCISE GREAT CARE AND FOLLOW THE ADVICE GIVEN TO AVOID POTENTIAL HAZARDOUS SITUATIONS

Before working on the machine it is essential that you read and understand the Safety Precautions as shown in the Operator's Manual.

Before working on the machine it is essential that :

- **The engine is switched off.**
- **The parking brake is applied.**
- **There is no pressure in the hydraulic system.**
- **The cutterheads are fully down on the ground.**

WARNING: PREVENT ACCIDENTS - When drilling or carrying out other operations always wear eye protection.

WARNING: PREVENT ACCIDENTS - Before working on the machines electrical systems ALWAYS disconnect the battery terminals and ensure no contact is made between the terminals and the machines metalwork.

WARNING: ALWAYS SEEK PROFESSIONAL ADVICE FROM YOUR LOCAL AUTHORISED DEALER IF, AFTER STUDYING THIS, YOU ARE UNSURE HOW TO FIT THIS KIT.

SPECIFICATIONS

Weight: 39Kg
Seat Switch: Max voltage 12 volts

DELIVERY CHECK LIST

ITEM NO.	DESCRIPTION	PART NO.	QTY	NOTE
1	SEAT DELUXE	111-3899	1	
2	SCREW-HH M8 X 25	03162	4	
3	WASHER-PLAIN M8	ZWP1H000U	8	
4	NUT-NYLOC M8, INSERT	09441	4	
5	SERIAL NUMBER LABEL	111-3876	1	NOT SHOWN

Fig 1

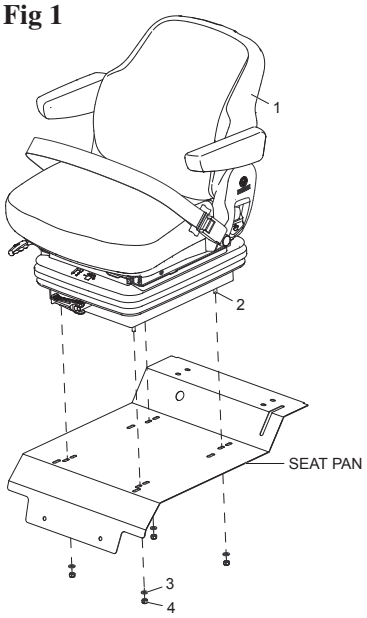

FITTING INSTRUCTIONS

These instructions refer to the removal of the standard seat and the fitting of a deluxe seat.

1. Lift the engine cover.

2. Disconnect the negative cable from the battery.

3. Raise the operator platform.

4. Open the lid of the storage pod and remove the three hand wheels. Remove the storage pod.

5. Disconnect the seat switch cable connector from the main wiring loom. Pass the wiring loom connector through the hole in the seat pan. Secure the seat connector to the seat.

6. Support the seat so that it cannot fall when its fixing nuts are removed.

7. Remove the nuts from the four studs that hold the seat runners to the seat pan. Refer to Fig 1. The seat will not slide down the tilted seat pan as the studs are fixed to the seat runners.

8. Lower the operator platform and apply the latch.

9. Lift the seat off of the seat pan.

10. Place the new Deluxe seat (item 1) onto the seat pan and align the holes in the suspension unit with the slots in the seat pan. Refer to Fig 1.

11. Thread the seat switch cable of the machine wiring loom through the 25mm diameter hole in the rear of the seat pan.

12. Put the M8 setscrews (item 2) with a plain washer (item 3) through the left hand side of the suspension unit and the seat pan / support frame. Secure loosely with a washer (item 3) and an M8 nyloc nut (item 4).

13. Raise the operator platform and fit the setscrew (item 2), washers x 2 (item 3) and the nyloc nut (item 4) to the suspension unit on the right hand side.

14. Tighten all four nuts to 27Nm.

15. Connect the seat switch cable to the connector on the main wiring loom.

16. Refit the storage pod.

17. Lower the operator platform.

18. Reconnect the negative battery cover.

19. Lower the engine cover.

FITTING INSTRUCTIONS Continued

20. Check that the seat switch functions correctly. Refer to the machines Operators Manual.

21. Fix the serial label (item 5) adjacent to the machine serial label.

OPERATING INSTRUCTIONS

The deluxe seat has adjustment for weight/height, fore and aft position and backrest angle.

Refer to Fig 2 for location of adjusters.

The arm rests can be raised to ease entry as required.

The Deluxe seat is fitted with retractable seat belts - refer to the machines Operators Manual for guidance on the use of seat belts.

The weight/height adjustment allows the suspension setting to be adjusted. Fold out the handle, rotate the adjuster clockwise to increase suspension stiffness and counter clockwise to decrease. Fold in the handle when the desired setting is obtained.

The fore/aft adjust handle allows the seat to be positioned forward or rearward to suit the operator. Lift the handle upwards, adjust the seat to the desired position and release the handle. Push back on the seat to ensure that it is locked in position.

To adjust the angle of the back of the seat, lift the back angle adjust lever on the left hand side of the seat. The seat back will move forward. Push it back to the desired position and release the handle.

Fig 2

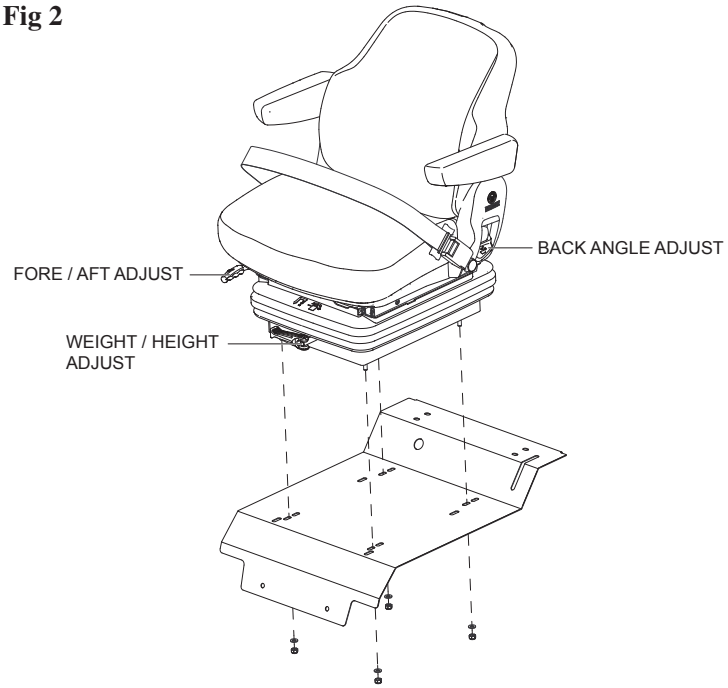

SPARE PARTS

ITEM NO.	DESCRIPTION	PART NO.	QTY	NOTE
1.1	SEAT BELT	111-4936	1	REFER TO FIG 1

MAINTENANCE

Every 12 months pull back the rubber skirt and apply a good quality grease to all pivot points and screw threads. Refit the rubber skirt.

There are no serviceable parts on the seat belt. If it shows any signs of damage or malfunction it should be replaced.

NOTES

The Toro Total Coverage Guarantee

A Limited Warranty

Conditions and Products Covered

The Toro® Company and its affiliate, Toro Warranty Company, pursuant to an agreement between them, jointly warrant your Toro Commercial product ("Product") to be free from defects in materials or workmanship for two years or 1500 operational hours*, whichever occurs first. This warranty is applicable to all products with the exception of Aerators (refer to separate warranty statements for these products). Where a warrantable condition exists, we will repair the Product at no cost to you including diagnostics, labor, parts, and transportation. This warranty begins on the date the Product is delivered to the original retail purchaser.
* Product equipped with an hour meter.

Instructions for Obtaining Warranty Service

You are responsible for notifying the Commercial Products Distributor or Authorized Commercial Products Dealer from whom you purchased the Product as soon as you believe a warrantable condition exists. If you need help locating a Commercial Products Distributor or Authorized Dealer, or if you have questions regarding your warranty rights or responsibilities, you may contact us at:

Commercial Products Service Department
Toro Warranty Company
8111 Lyndale Avenue South
Bloomington, MN 55420-1196
E-mail: commercial.warranty@toro.com

Owner Responsibilities

As the Product owner, you are responsible for required maintenance and adjustments stated in your Operator's Manual. Failure to perform required maintenance and adjustments can be grounds for disallowing a warranty claim.

Items and Conditions Not Covered

Not all product failures or malfunctions that occur during the warranty period are defects in materials or workmanship. This warranty does not cover the following:

- Product failures which result from the use of non-Toro replacement parts, or from installation and use of add-on, or modified non-Toro branded accessories and products. A separate warranty may be provided by the manufacturer of these items.
- Product failures which result from failure to perform recommended maintenance and/or adjustments. Failure to properly maintain your Toro product per the Recommended Maintenance listed in the *Operator's Manual* can result in claims for warranty being denied.
- Product failures which result from operating the Product in an abusive, negligent or reckless manner.
- Parts subject to consumption through use unless found to be defective. Examples of parts which are consumed, or used up, during normal Product operation include, but are not limited to, brakes pads and linings, clutch linings, blades, reels, bed knives, tines, spark plugs, castor wheels, tires, filters, belts, and certain sprayer components such as diaphragms, nozzles, and check valves, etc.
- Failures caused by outside influence. Items considered to be outside influence include, but are not limited to, weather, storage practices, contamination, use of unapproved coolants, lubricants, additives, fertilizers, water, or chemicals, etc.
- Normal noise, vibration, wear and tear, and deterioration.
- Normal "wear and tear" includes, but is not limited to, damage to seats due to wear or abrasion, worn painted surfaces, scratched decals or windows, etc.

Parts

Parts scheduled for replacement as required maintenance are warranted for the period of time up to the scheduled replacement time for that part. Parts replaced under this warranty are covered for the duration of the original product warranty and become the property of Toro. Toro will make the final decision whether to repair any existing part or assembly or replace it. Toro may use remanufactured parts for warranty repairs.

Note Regarding Deep Cycle Battery Warranty:

Deep cycle batteries have a specified total number of kilowatt-hours they can deliver during their lifetime. Operating, recharging, and maintenance techniques can extend or reduce total battery life. As the batteries in this product are consumed, the amount of useful work between charging intervals will slowly decrease until the battery is completely worn out. Replacement of worn out batteries, due to normal consumption, is the responsibility of the product owner. Battery replacement may be required during the normal product warranty period at owner's expense.

Maintenance is at Owner's Expense

Engine tune-up, lubrication cleaning and polishing, replacement of Items and Conditions Not Covered filters, coolant, and completing Recommended Maintenance are some of the normal services Toro products require that are at the owner's expense.

General Conditions

Repair by an Authorized Toro Distributor or Dealer is your sole remedy under this warranty.

Neither The Toro Company nor Toro Warranty Company is liable for indirect, incidental or consequential damages in connection with the use of the Toro Products covered by this warranty, including any cost or expense of providing substitute equipment or service during reasonable periods of malfunction or non-use pending completion of repairs under this warranty. Except for the Emissions warranty referenced below, if applicable, there is no other express warranty.

All implied warranties of merchantability and fitness for use are limited to the duration of this express warranty. Some states do not allow exclusions of incidental or consequential damages, or limitations on how long an implied warranty lasts, so the above exclusions and limitations may not apply to you.

This warranty gives you specific legal rights, and you may also have other rights which vary from state to state.

Countries Other than the United States or Canada

Customers should contact their Toro Distributor (Dealer) to obtain guarantee policies for your country, province, or state. If for any reason you are dissatisfied with your Distributor's service or have difficulty obtaining guarantee information, contact the Toro importer. If all other remedies fail, you may contact us at Toro Warranty Company.