Form No. 3364-486 Rev B

TORO®

Count on it.

Operator's Manual

Commercial Walk-Behind Mower

Fixed Deck, Pistol Grip, Gear Drive with a 32in, 36in or 48in Cutting Unit

Model No. 30632—Serial No. 310000001 and Up

Model No. 30634—Serial No. 310000001 and Up

Model No. 30638—Serial No. 310000001 and Up

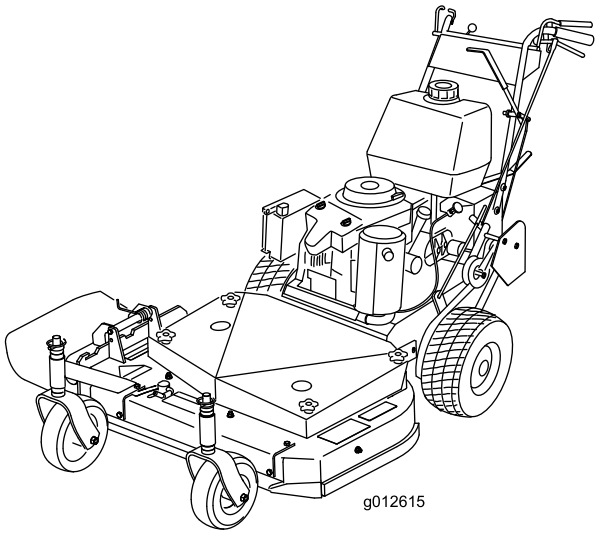

WARNING

CALIFORNIA
Proposition 65 Warning

The engine exhaust from this product contains chemicals known to the State of California to cause cancer, birth defects, or other reproductive harm.

This spark ignition system complies with Canadian ICES-002.

Important: This engine is not equipped with a spark arrester muffler. It is a violation of California Public Resource Code Section 4442 to use or operate the engine on any forest-covered, brush-covered, or grass-covered land. Other states or federal areas may have similar laws.

The enclosed *Engine Owner's Manual* is supplied for information regarding the US Environmental Protection Agency (EPA) and the California Emission Control Regulation of emission systems, maintenance, and warranty. Replacements may be ordered through the engine manufacturer.

Introduction

This rotary-blade, lawn mower is intended to be used by residential homeowners or professional, hired operators. It is designed primarily for cutting grass on well-maintained lawns on residential or commercial properties. It is not designed for cutting brush or for agricultural uses.

Read this information carefully to learn how to operate and maintain your product properly and to avoid injury and product damage. You are responsible for operating the product properly and safely.

You may contact Toro directly at www.Toro.com for product and accessory information, help finding a dealer, or to register your product.

Whenever you need service, genuine Toro parts, or additional information, contact an Authorized Service Dealer or Toro Customer Service and have the model and serial numbers of your product ready. Figure 1 identifies the location of the model and serial numbers on the product. Write the numbers in the space provided.

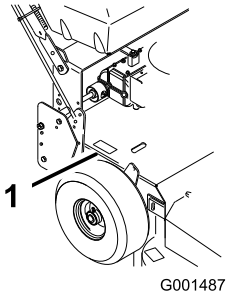

Figure 1

1. Model and serial number location

Model No. _____

Serial No. _____

This manual identifies potential hazards and has safety messages identified by the safety alert symbol (Figure 2), which signals a hazard that may cause serious injury or death if you do not follow the recommended precautions.



Figure 2

1. Safety alert symbol

This manual uses 2 other words to highlight information. **Important** calls attention to special mechanical information and **Note** emphasizes general information worthy of special attention.

Contents

Introduction 2
Safety 3
- Safe Operating Practices 3
- Toro Mower Safety 4
- Slope Indicator 6
- Safety and Instructional Decals 7

Product Overview 9
- Controls 9
- Specifications 10
- Attachments/Accessories 10

Operation 11
- Adding Fuel 11
- Think Safety First 12
- Operating the Parking Brake and Neutral Locks 12

© 2012—The Toro® Company
8111 Lyndale Avenue South
Bloomington, MN 55420

Contact us at www.Toro.com.
Printed in the USA.
All Rights Reserved

Starting and Stopping the Engine 12
Operating the Blade Control (PTO) Lever 13
The Safety Interlock System 14
Driving Forward or Backward 14
Stopping the Mower 15
Transporting Machines 15
Side Discharging or Mulching the Grass 15
Adjusting the Wheel Drive Tension 15
Adjusting the Height-of-Cut 16
Adjusting the Handle Height 17
Height of Cut Chart 19
Maintenance 20
Recommended Maintenance Schedule(s) 20
Lubrication 21
How to Grease 21
Lubricating the Caster and Wheel Bearings 21
Greasing the Transmission Couplers 21
Greasing the Mower Belt Idler 21
Engine Maintenance 22
Servicing the Air Cleaner 22
Servicing the Engine Oil 23
Servicing the Spark Plugs 24
Fuel System Maintenance 25
Draining the Fuel Tank 25
Replacing the Fuel Filter 26
Drive System Maintenance 27
Checking the Tire Pressure 27
Cooling System Maintenance 27
Cleaning the Air Intake Screen 27
Cleaning the Cooling System 27
Brake Maintenance 28
Servicing the Brakes 28
Belt Maintenance 29
Checking the Belts 29
Replacing the Traction Drive Belt 29
Replacing the Drive Belt 29
Replacing the Mower Belt 30
Adjusting the Mower Belt Tension 31
Controls System Maintenance 35
Adjusting the Control Rods 35
Mower Deck Maintenance 36
Servicing the Cutting Blades 36
Adjusting the Blade Brake 38
Replacing the Grass Deflector 38
Storage 39
Cleaning and Storage 39
Troubleshooting 41
Schematics 43

Safety

Note: The addition of attachments made by other manufacturers that do not meet American National Standards Institute certification will cause noncompliance of this machine.

Improper use or maintenance by the operator or owner can result in injury. To reduce the potential for injury, comply with these safety instructions and always pay attention to the safety alert symbol ⚠, which means CAUTION, WARNING, or DANGER-"personal safety instruction." Failure to comply with the instruction may result in personal injury or death.

Safe Operating Practices

The following instructions are from ANSI standard B71.4-2004.

Training

- Read the Operator's Manual and other training material. If the operator(s) or mechanic(s) can not read English it is the owner's responsibility to explain this material to them.
- Become familiar with the safe operation of the equipment, operator controls, and safety signs.
- All operators and mechanics should be trained. The owner is responsible for training the users.
- Never let children or untrained people operate or service the equipment. Local regulations may restrict the age of the operator.
- The owner/user can prevent and is responsible for accidents or injuries occurring to himself or herself, other people or property.

Preparation

- Evaluate the terrain to determine what accessories and attachments are needed to properly and safely perform the job. Only use accessories and attachments approved by the manufacturer.
- Wear appropriate clothing including hard hat, safety glasses and hearing protection. Long hair, loose clothing or jewelry may get tangled in moving parts.
- Inspect the area where the equipment is to be used and remove all objects such as rocks, toys and wire which can be thrown by the machine.
- Use extra care when handling gasoline and other fuels. They are flammable and vapors are explosive.
  - Use only an approved container

  - Never remove gas cap or add fuel with engine running. Allow engine to cool before refueling. Do not smoke.
  - Never refuel or drain the machine indoors.
- Check that operator's presence controls, safety switches and shields are attached and functioning properly. Do not operate unless they are functioning properly.

Operation

- Lightning can cause severe injury or death. If lightning is seen or thunder is heard in the area, do not operate the machine; seek shelter.
- Never run an engine in an enclosed area.
- Only operate in good light, keeping away from holes and hidden hazards.
- Be sure all drives are in neutral and parking brake is engaged before starting engine. Only start engine from the operator's position.
- Be sure of your footing while using this machine, especially when backing up. Walk, don't run. Never operate on wet grass. Reduced footing could cause slipping.
- Slow down and use extra care on hillsides. Be sure to travel side to side on hillsides. Turf conditions can affect the machine's stability. Use caution while operating near drop-offs.
- Slow down and use caution when making turns and when changing directions on slopes.
- Never raise deck with the blades running.
- Never operate with the PTO shield, or other guards not securely in place. Be sure all interlocks are attached, adjusted properly, and functioning properly.
- Never operate with the discharge deflector raised, removed or altered, unless using a grass catcher.
- Do not change the engine governor setting or overspeed the engine.
- Stop on level ground, disengage drives, engage parking brake (if provided), shut off engine before leaving the operator's position for any reason including emptying the catchers or unclogging the chute.
- Stop equipment and inspect blades after striking objects or if an abnormal vibration occurs. Make necessary repairs before resuming operations.
- Keep hands and feet away from the cutting unit.
- Look behind and down before backing up to be sure of a clear path.
- Keep pets and bystanders away.
- Slow down and use caution when making turns and crossing roads and sidewalks. Stop blades if not mowing.
- Be aware of the mower discharge direction and do not point it at anyone.
- Do not operate the mower under the influence of alcohol or drugs.
- Use care when loading or unloading the machine into or from a trailer or truck.
- Use care when approaching blind corners, shrubs, trees, or other objects that may obscure vision.

Maintenance and storage

- Disengage drives, set parking brake, stop engine and remove key or disconnect spark plug wire. Wait for all movement to stop before adjusting, cleaning or repairing.
- Clean grass and debris from cutting unit, drives, mufflers, and engine to help prevent fires. Clean up oil or fuel spillage.
- Let engine cool before storing and do not store near flame.
- Shut off fuel while storing or transporting. Do not store fuel near flames or drain indoors.
- Park machine on level ground. Set parking brake. Never allow untrained personnel to service machine.
- Use jack stands to support components when required.
- Carefully release pressure from components with stored energy.
- Disconnect the battery or remove spark plug wire before making any repairs. Disconnect the negative terminal first and the positive last. Reconnect the positive first and negative last.
- Use care when checking blades. Wrap the blade(s) or wear gloves, and use caution when servicing them. Only replace blades. Never straighten or weld them.
- Keep hands and feet away from moving parts. If possible, do not make adjustments with the engine running.
- Keep all parts in good working condition and all hardware tightened. Replace all worn or damaged decals.

Toro Mower Safety

The following list contains safety information specific to Toro products and other safety information you must know.

This product is capable of amputating hands and feet and throwing objects. Always follow all safety instructions to avoid serious injury or death.

This product is designed for cutting and recycling grass or, when equipped with a grass bagger, for catching cut grass. Any use for purposes other than these could prove dangerous to user and bystanders.

General Operation

- Be sure the area is clear of other people before mowing. Stop the machine if anyone enters the area.
- Do not touch equipment or attachment parts which may be hot from operation. Allow to cool before attempting to maintain, adjust or service.
- Use only Toro-approved attachments. Warranty may be voided if used with unapproved attachments.
- Check carefully for overhead clearances (i.e. branches, doorways, electrical wires) before operating under any objects and do not contact them.

Slope Operation

All slopes and ramps require extra caution. If you feel uneasy on a slope, do not mow it.

- Remove obstacles such as rocks, tree limbs, etc. from the mowing area.
- Watch for holes, ruts or bumps. Tall grass can hide obstacles.
- Use caution near drop-offs, ditches, or embankments. The machine could suddenly turn over if a wheel goes over the edge of a cliff or ditch, or if an edge caves in.
- Use extra care with grass catchers or other attachments. These can change the stability of the machine.
- Keep all movement on slopes slow and gradual. Do not make sudden changes in speed or direction.
- Mow slopes side to side.
- Do not mow slopes greater than 20 degrees.

Service

- Never store the machine or fuel container inside where there is an open flame, such as near a water heater or furnace.
- Keep nuts and bolts tight, especially the blade attachment bolts and nuts. Keep equipment in good condition.
- Never tamper with safety devices. Check safety systems for proper operation before each use.
- Use only genuine replacement parts to ensure that original standards are maintained.
- Check brake operation frequently. Adjust and service as required.

Slope Indicator

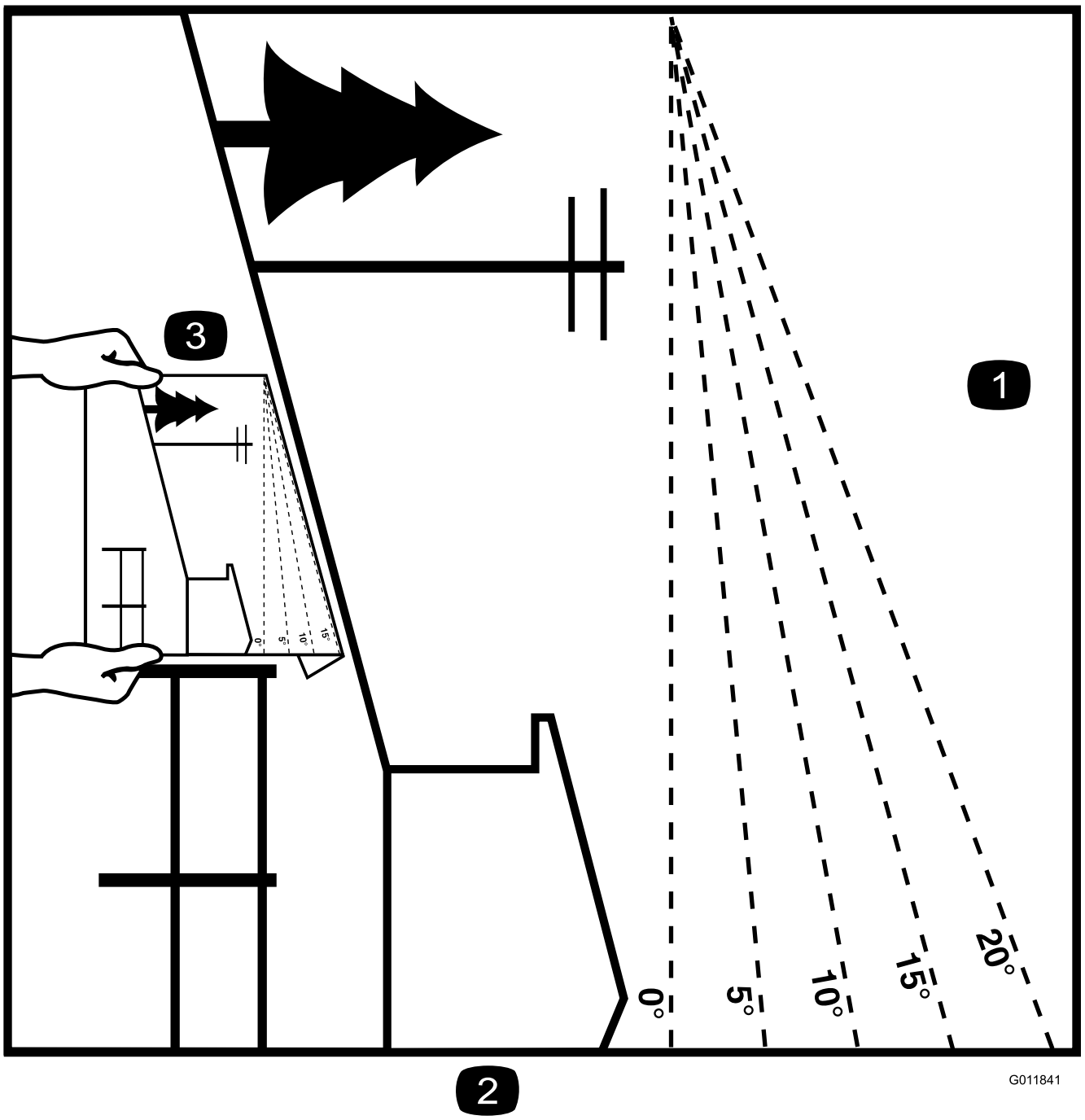

Figure 3

This page may be copied for personal use.

1. The maximum slope you can safely operate the machine on is **20 degrees**. Use the slope chart to determine the degree of slope of hills before operating. **Do not operate this machine on a slope greater than 20 degrees.** Fold along the appropriate line to match the recommended slope.
2. Align this edge with a vertical surface, a tree, building, fence pole, etc.
3. Example of how to compare slope with folded edge.

Safety and Instructional Decals

Safety decals and instructions are easily visible to the operator and are located near any area of potential danger. Replace any decal that is damaged or lost.



43-8480



98-0776



66-1340

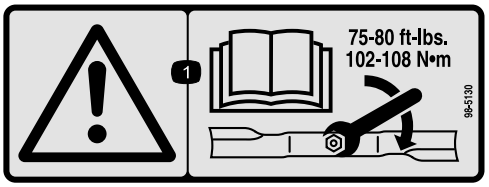

98-5130

1. Warning—read the *Operator's Manual* for instructions on torquing the blade bolt/nut to 75-80 ft-lb (102-106 N·m).



98-5954

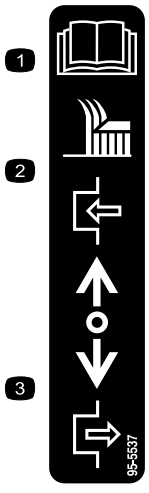

95-5537

1. Read the *Operator's Manual* for instructions on operating the cutting blade
2. Push forward to engage
3. Pull back to disengage

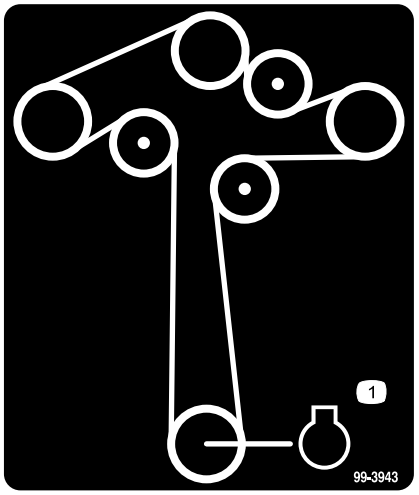

99-3943

1. Engine



104-8569



105-4104

1. Reverse
2. Neutral
3. Transmission speeds



105-4111

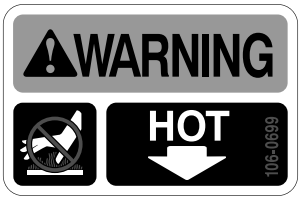

106-0699

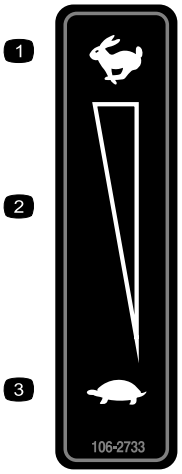

106-2733

1. Fast
2. Continuous variable setting
3. Slow

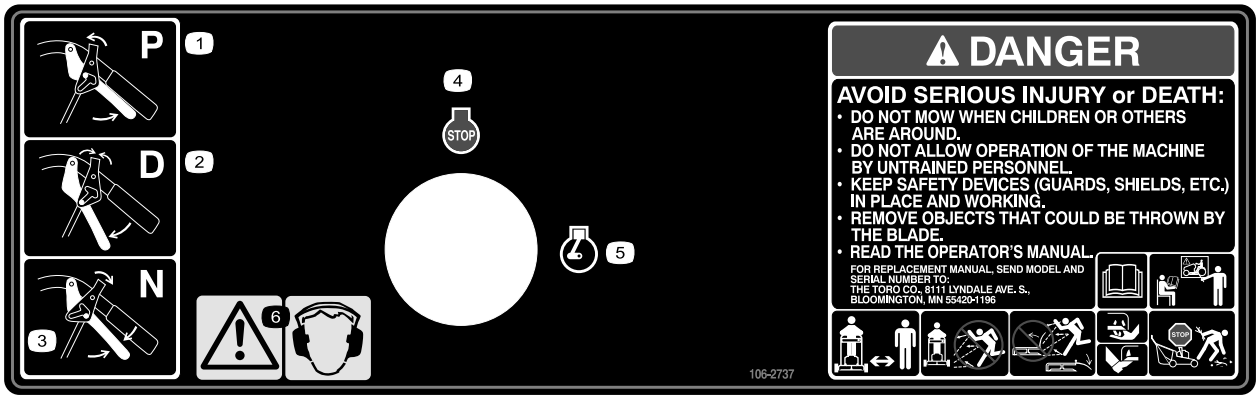

106-2737

1. Park
2. Drive
3. Neutral
4. Engine—stop
5. Engine—run
6. Warning—wear ear protection.

Product Overview

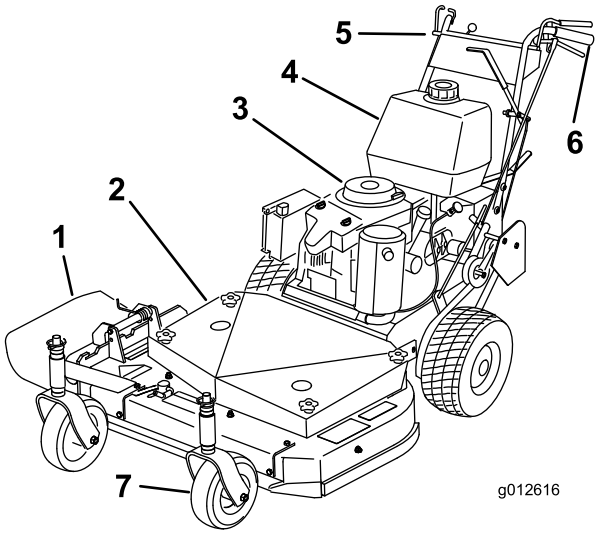

Figure 4

1. Side discharge
2. Mower deck
3. Recoil starter
4. Gas tank
5. Controls
6. Handle
7. Caster wheel

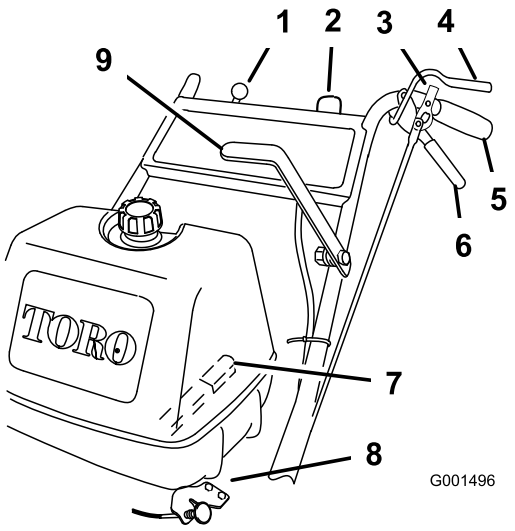

Figure 5

1. Throttle control
2. Ignition switch
3. Neutral/parking brake lock
4. Operator Presence Control (OPC) lever
5. Handle
6. Drive lever
7. Gear shift lever
8. Choke
9. Power take off lever (PTO)

Controls

Become familiar with all the controls (Figure 5) before you start the engine and operate the machine.

Throttle Control

The throttle control has two positions: **Fast** and **Slow**.

Operator Presence Control (OPC) Levers

When you squeeze the OPC levers against the handles, the OPC system senses that the operator is in the normal operating position. When you release the OPC levers, the OPC system senses that the operator has left the normal operating position, and the system will stop the engine if either the gear shift lever is not in the **neutral** position or the blade control (PTO) lever is engaged.

Gear Shift Lever

The transmission has five forward speeds, neutral and reverse, and has an in-line shift pattern.

Important: Do not shift while unit is moving, as transmission damage may occur.

Drive Levers

Release drive levers to engage forward traction operation. Squeeze right side of drive lever to turn right and left side to turn left.

Neutral/Parking Brake Lock

Squeeze drive levers and move the locks rearward for neutral lock. Squeeze drive levers and move the locks forward to set the parking brake.

Blade Control Lever (PTO)

This lever is used in conjunction with the OPC levers to engage or disengage the mower deck belt and drive the mower blades.

Recoil Starter

Pull the recoil starter handle to start engine (not shown in).

Fuel Shut-off Valve

Close the fuel shut-off valve when transporting or storing mower.

Ignition Switch

This switch is used in conjunction with recoil starter and has two positions: **Run** and **Off**.

Choke

Use the choke to start a cold engine.

Specifications

Note: Specifications and design are subject to change without notice.

32 inch mowers:

Width with deflector down	45.8 inches (116.3 cm)
Length	78 inches (198.1 cm)
Height	41 inches (104.1 cm)
Weight	402 lb (182 kg)

36 inch mowers:

Width with deflector down	46.6 inches (118.4 cm)
Length	80 inches (203.2 cm)
Height	41 inches (104.1 cm)
Weight	462 lb (210 kg)

48 inch mowers:

Width with deflector down	63–1/2 inches (161.3 cm)
Length	78–3/8 inches (198.9 cm)
Height	41 inches (104.1 cm)
Weight	500 lb (227 kg)

Attachments/Accessories

A selection of Toro approved attachments and accessories are available for use with the machine to enhance and expand its capabilities. Contact your Authorized Service Dealer or Distributor or go to www.Toro.com for a list of all approved attachments and accessories.

Operation

Adding Fuel

Use **Unleaded** Regular Gasoline suitable for automotive use (87 pump octane minimum). Leaded regular gasoline may be used if unleaded regular is not available.

Important: Never use methanol, gasoline containing methanol, or gasohol containing more than 10% ethanol because the fuel system could be damaged. Do not mix oil with gasoline.

⚠ DANGER

In certain conditions, gasoline is extremely flammable and highly explosive. A fire or explosion from gasoline can burn you and others and can damage property.

- **Fill the fuel tank outdoors, in an open area, when the engine is cold. Wipe up any gasoline that spills.**
- **Never fill the fuel tank inside an enclosed trailer.**
- **Do not fill the fuel tank completely full. Add gasoline to the fuel tank until the level is 1/4 to 1/2 inch (6 to 13 mm) below the bottom of the filler neck. This empty space in the tank allows gasoline to expand.**
- **Never smoke when handling gasoline, and stay away from an open flame or where gasoline fumes may be ignited by a spark.**
- **Store gasoline in an approved container and keep it out of the reach of children. Never buy more than a 30-day supply of gasoline.**
- **Do not operate without entire exhaust system in place and in proper working condition.**

⚠ DANGER

In certain conditions during fueling, static electricity can be released causing a spark which can ignite the gasoline vapors. A fire or explosion from gasoline can burn you and others and can damage property.

- **Always place gasoline containers on the ground away from your vehicle before filling.**
- **Do not fill gasoline containers inside a vehicle or on a truck or trailer bed because interior carpets or plastic truck bed liners may insulate the container and slow the loss of any static charge.**
- **When practical, remove gas-powered equipment from the truck or trailer and refuel the equipment with its wheels on the ground.**
- **If this is not possible, then refuel such equipment on a truck or trailer from a portable container, rather than from a gasoline dispenser nozzle.**
- **If a gasoline dispenser nozzle must be used, keep the nozzle in contact with the rim of the fuel tank or container opening at all times until fueling is complete.**

⚠ WARNING

Gasoline is harmful or fatal if swallowed. Long-term exposure to vapors can cause serious injury and illness.

- **Avoid prolonged breathing of vapors.**
- **Keep face away from nozzle and gas tank or conditioner bottle opening.**
- **Keep gas away from eyes and skin.**

Using Stabilizer/Conditioner

Use a fuel stabilizer/conditioner in the machine to provide the following benefits:

- Keeps gasoline fresh during storage of 90 days or less. For longer storage it is recommended that the fuel tank be drained.
- Cleans the engine while it runs
- Eliminates gum-like varnish buildup in the fuel system, which causes hard starting

Important: Do not use fuel additives containing methanol or ethanol.

Add the correct amount of gas stabilizer/conditioner to the gas.

Note: A fuel stabilizer/conditioner is most effective when mixed with fresh gasoline. To minimize the chance of varnish deposits in the fuel system, use fuel stabilizer at all times.

Filling the Fuel Tank

1. Shut the engine off and set the parking brake.
2. Clean around fuel tank cap and remove the cap. Add unleaded regular gasoline to fuel tank, until the level is 1/4 to 1/2 inch (6 to 13 mm) below the bottom of the filler neck. This space in the tank allows gasoline to expand. Do not fill the fuel tank completely full.
3. Install fuel tank cap securely. Wipe up any gasoline that may have spilled.

Think Safety First

Carefully read all the safety instructions and decals in the safety section. Knowing this information could help you or any bystanders avoid injury.

The use of protective equipment for eyes, hearing, feet and head is recommended.

⚠ CAUTION

This machine produces sound levels in excess of 85 dBA at the operator's ear and can cause hearing loss through extended periods of exposure.

Wear hearing protection when operating this machine.



Figure 6

1. Warning—wear hearing protection.

Operating the Parking Brake and Neutral Locks

Always set the parking brakes when you stop the machine or leave it unattended.

⚠ WARNING

Children or bystanders may be injured if they move or attempt to operate the machine while it is unattended.

Always set the parking brake when leaving the machine unattended, even if just for a few minutes.

Setting the Parking Brakes

1. Squeeze the drive levers (Figure 7).

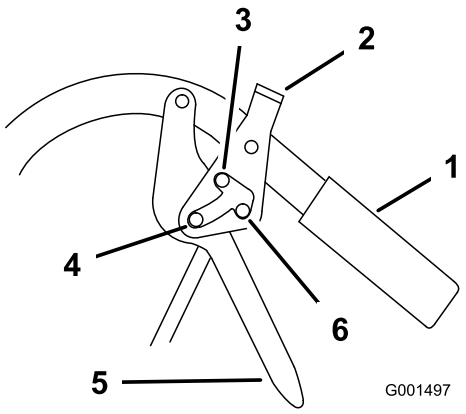

Figure 7

1. Handle
2. Neutral/parking brake lock
3. Park position
4. Full speed forward
5. Drive lever
6. Neutral position

2. Place your thumbs on the upper part of the locks and move them forward in into the **park** position (Figure 7).
3. Release the drive levers.

Releasing the Parking Brakes

1. Squeeze the drive levers back (Figure 7).
2. Place your thumbs on the upper part of the locks and move them rearward until they are in the **drive** position (Figure 7).

Setting the Neutral Locks

1. Squeeze the drive levers back (Figure 7).
2. Place your thumbs on the upper part of the locks and move them rearward into the **neutral lock** position (Figure 7).

Releasing the Neutral Locks

1. Squeeze the drive levers back.
2. Place your thumbs on the upper part of the locks and move them forward until they are in the **drive** position (Figure 7).

Starting and Stopping the Engine

Starting the Engine

1. Connect the wires to the spark plugs.
2. Open the fuel valve.

3. Disengage the blade control (PTO) lever and move the shift lever to the **neutral** position.
4. Set the parking brakes.
5. Turn the ignition key to the **run** position (Figure 8).
6. To start a cold engine, move the throttle control midway between the **fast** and **slow** positions.
7. To start a warm engine, move the throttle control to the **fast** position.
8. Pull the choke knob if the engine is cold (Figure 8).

   Note: A warm or hot engine usually does not require any choking.
9. Grasp the recoil starter handle firmly and pull it out until positive engagement results; then pull the handle vigorously to start the engine. Allow the rope to recoil slowly.

   Important: Do not pull the recoil rope to its limit or release the starter handle when you pull out the rope because the rope may break or the recoil assembly may be damaged.
10. Push the choke to off as the engine warms up.
11. If the engine is cold, allow it to warm up and then move the throttle control to the **fast** position.

Stopping the Engine

Important: In an emergency, you can stop the engine immediately by turning the ignition key to the *off* position.

1. Move the throttle lever to the slow position (Figure 8).

   Note: If the engine has been working hard or is hot, let it idle for a minute before stopping it to help cool it.
2. Turn the ignition key to the **off** position.
3. Set the parking brakes and remove the key.
4. Disconnect the wire from the spark plug to prevent someone from accidentally starting the machine while transporting or storing it.
5. Close the fuel shut-off valve before transporting or storing the machine.

   Important: Close the fuel shut-off valve before transporting or the storing the machine to prevent fuel leakage.

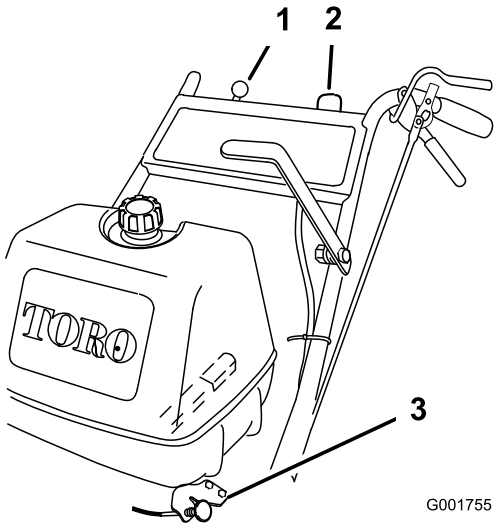

Figure 8

1. Throttle control
2. Ignition switch
3. Choke

Operating the Blade Control (PTO) Lever

The blade control (PTO) lever engages and disengages the power to the mower blades.

Engaging the Mower Blades (PTO)

1. Squeeze the operator presence control (OPC) levers against the handles (Figure 9).
2. Push the blade control (PTO) lever firmly forward until it latches over the center (Figure 9).
3. Restart the engine and repeat the procedure to engage the mower blades if the operator presence control (OPC) levers are released.

Disengaging the Mower Blades (PTO)

To disengage the blades, pull the blade control lever rearward all the way (Figure 9). The engine will kill when the OPC levers are released with the blade control lever engaged.

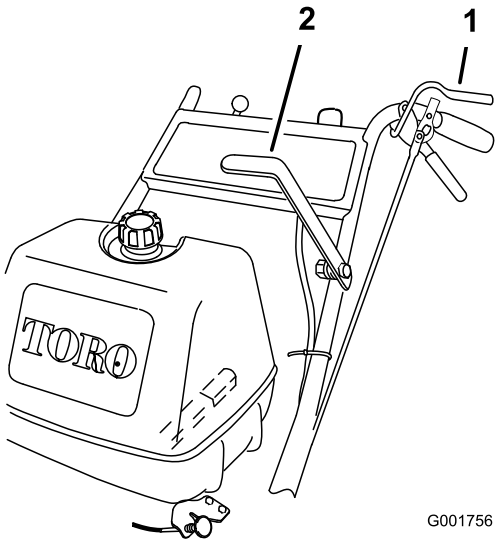

Figure 9

1. Operator Presence Control (OPC) lever
2. Power take off lever (PTO)

The Safety Interlock System

⚠ CAUTION

If safety interlock switches are disconnected or damaged the machine could operate unexpectedly causing personal injury.

- **Do not tamper with the interlock switches.**
- **Check the operation of the interlock switches daily and replace any damaged switches before operating the machine.**

Understanding the Safety Interlock System

The safety interlock system is designed to prevent the engine from starting unless:

- The blade control (PTO) lever is disengaged.
- The machine is shifted into the Neutral position.
- The ignition key is in the Run position.

The safety interlock system is designed to stop the engine when:

- The Operator Presence Control (OPC) levers are released when the transmission or the blades are engaged;
- The ignition key is turned to the Off position.
- The machine is shifted into gear without holding the OPC levers.
- The blade control (PTO) lever is engaged without holding the OPC levers.

Testing the Safety Interlock System

Test the safety interlock system before you use the machine each time. If the safety system does not operate as described, have an Authorized Service Dealer repair the safety system immediately.

1. Set the parking brakes, move the shift lever into the Neutral position, disengage the blade control (PTO) lever and place the throttle forward.
2. Start the engine; refer to Starting the Engine.
3. Without holding the Operator Presence Control (OPC) levers, engage the blade control (PTO) lever. The engine should stop.
4. Disengage the blade control (PTO) lever.
5. With the engine running, hold down the OPC levers and engage the blade control (PTO) lever. The mower belt should engage and the mower blades begin rotating.
6. Release the OPC levers. The engine should stop.
7. With the engine running, move the shift lever into gear and release the OPC levers. The engine should stop.
8. With the engine running, turn the ignition key to the **off** position. The engine should stop.
9. If all the above conditions are not met, have an Authorized Service Dealer repair the safety system immediately.

Driving Forward or Backward

The throttle control regulates the engine speed as measured in RPM (revolutions per minute). Move the throttle control into the Fast position for the best mowing performance.

Driving Forward

1. Ensure that the parking brakes are engaged.
2. Squeeze the OPC levers against the handles.
3. Move the shift lever into a forward gear.
4. Release the parking brakes; refer to Releasing the Parking Brakes and Neutral Locks.
5. Slowly release the drive levers.

   Note: To go straight, release the drive levers equally. To turn, squeeze the drive lever on the same side as the direction you want to turn.

Driving Backward

1. Ensure that the parking brakes are engaged.
2. Squeeze the OPC levers against the handles.
3. Move the shift lever into the reverse gear.

4. Release the parking brakes; refer to Releasing the Parking Brakes and Neutral Locks.
5. Slowly release the drive levers.

   Note: You must pull the mower backward to assist its rearward movement.

Stopping the Mower

1. Squeeze the drive levers all the way back to engage the brakes.
2. Set the parking brakes. Refer to Setting the Parking Brakes.
3. Shift transmission into the Neutral position.
4. Move the throttle to the Stop position, and wait for all moving parts to stop before leaving the operating position.

⚠ CAUTION

Children or bystanders may be injured if they move or attempt to operate the machine while it is unattended.

Always remove the ignition key and set the parking brake when leaving the machine unattended, even if just for a few minutes.

Transporting Machines

Use a heavy-duty trailer or truck to transport the machine. Ensure that the trailer or truck has all necessary lighting and marking as required by law. Please carefully read all the safety instructions. Knowing this information could help you, your family, pets or bystanders avoid injury.

To transport the machine:

1. Stop the engine, remove the key, set the brake, and close the fuel valve.
2. Securely fasten the machine to the trailer or truck with straps, chains, cable, or ropes.
3. Secure a trailer to towing vehicle with safety chains.
4. If applicable, connect the trailer brakes.

Side Discharging or Mulching the Grass

This mower has a hinged grass deflector that disperses clippings to the side and down toward the turf.

⚠ DANGER

Without the grass deflector, discharge cover, or complete grass catcher assembly mounted in place, you and others are exposed to blade contact and thrown debris. Contact with rotating mower blade(s) and thrown debris will cause injury or death.

- **Never remove the grass deflector from the mower because the grass deflector routes material down toward the turf. If the grass deflector is ever damaged, replace it immediately.**
- **Never put your hands or feet under the mower.**
- **Never try to clear discharge area or mower blades unless you release the bail and the power take off (PTO) is off. Rotate the ignition key to Off. Also remove the key and pull the wire off the spark plug(s).**

Adjusting the Wheel Drive Tension

You may need to increase the wheel drive belt tension under certain operating conditions, such as mower over hilly terrain or while pulling a sulky.

1. Stop the engine, remove the key, and wait for all moving parts to stop.
2. Disconnect the wires from the spark plugs.
3. Disengage the neutral/parking brake locks, and release the drive levers to reduce the spring force.
4. Remove the drive spring from the adjustment bolt (Figure 10).

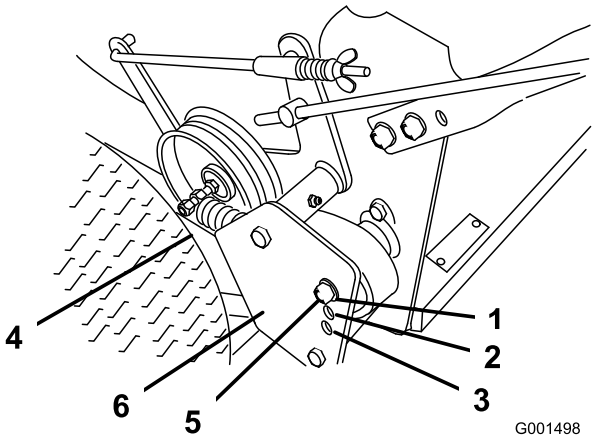

Figure 10

1. Position **A**
2. Position **B**
3. Position **C**
4. Drive spring
5. Adjustment bolt (In position **A**)
6. Drive pulley shield

5. Remove the locknut that secures the adjustment bolt to the drive pulley shield (Figure 10).
6. Locate bolt assembly in the desired tension position as follows:
   - Position A for normal conditions
   - Position B for more severe conditions
   - Position C for the most severe conditions

   Note: The wheel drive tension is lowest when the bolt assembly is in Position A. The tension increases in Positions B and C (Figure 10).
7. Install the adjustment bolt and the drive spring.
8. Repeat steps through for the opposite side.

Adjusting the Height-of-Cut

This machine has a 1 to 4-1/4 inch (26 to 108 mm) range for the height-of-cut. This can be achieved by adjusting blade spacers, rear axle height, and front caster spacers. Use the Height-of-Cut Chart to select the combination of adjustments required.

Adjusting the Blade Height

Adjust the blades by using the 4 spacers (1/4 inch) (6 mm) on the blade spindle bolts. This allows for a 1-inch (25 mm) adjustment range, in 1/4 inch (6 mm) increments, of cutting height in any axle position. Use the same number of blade spacers on all blades to achieve a level cut (2 above and 2 below, 1 above and 3 below, etc.).

1. Disengage the blade control (PTO) lever and set the parking brakes.
2. Stop the engine and wait for all moving parts to stop before leaving the operating position.
3. Hold the blade bolt and remove the nut (Figure 11).

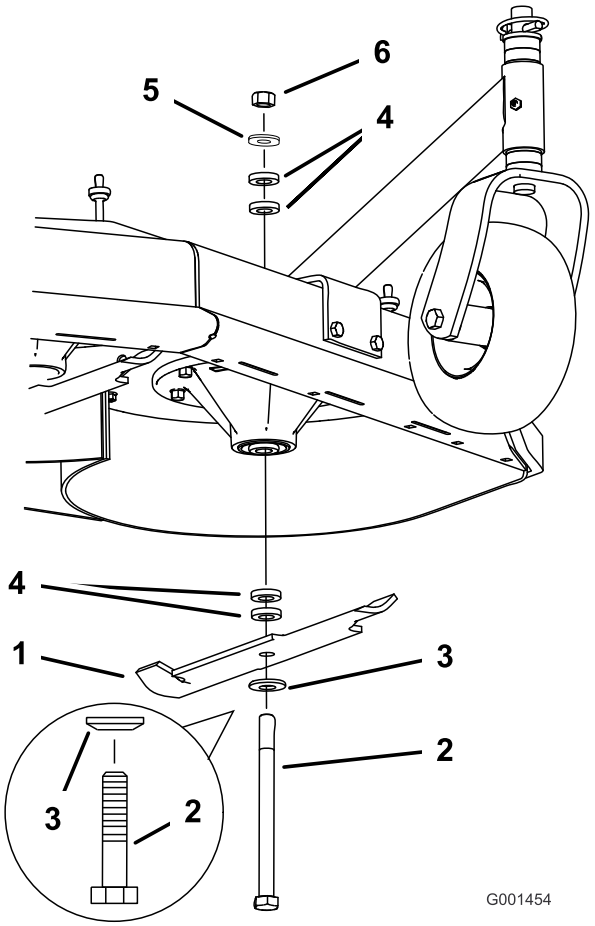

Figure 11

1. Blade
2. Blade bolt
3. Curved washer
4. Spacer
5. Thin washer
6. Nut

4. Slide the bolt down through the spindle, and change the spacers as needed (Figure 11).
5. Install the bolt and curved washer, add extra spacer(s), and secure them with a thin washer and a nut (Figure 11).
6. Torque the blade bolt to 75-80 ft-lb (101-108 N-m).

Adjusting the Axle Height

Adjust the axle position to the selected height-of-cut setting. Refer to the Height-of-Cut Chart.

1. Disengage the blade control (PTO) lever and set the parking brakes.
2. Stop the engine and wait for all moving parts to stop before leaving the operating position.
3. Loosen, but do not remove, the 2 axle pivot bolts and the 2 axle adjustment bolts (Figure 12).

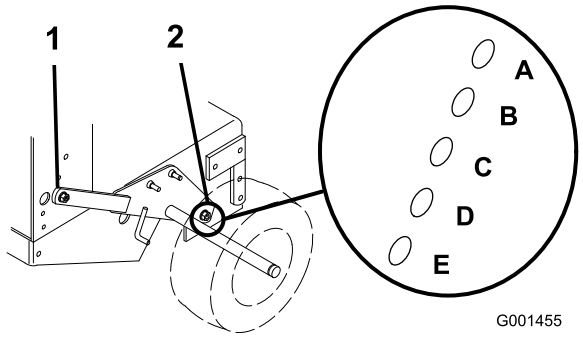

Figure 12

1. Axle pivot bolt
2. Axle adjustment bolt

4. Place a jack under the rear center of the engine frame. Raise the back end of the engine frame up enough to remove the front 2 axle adjustment bolts (Figure 12).

   Note: Use jack stands to support the machine.

5. Raise or lower the engine frame with the jack so that you can install the front 2 axle adjustment bolts in the desired hole location (Figure 12).

   Note: Use a tapered punch to help align the holes.

6. Tighten all 4 bolts and lower the mower.
7. Adjust the control rods and the brake linkages as required. Refer to Servicing the Brakes and Adjusting the Control Rods.

   Important: You must adjust the control rods and the brake linkage when you change the axle positions for proper traction and brake function.

Adjusting the Caster Position

1. Using the Height-of-Cut Chart, adjust the caster spacers to match with the axle hole selected (Figure 13).

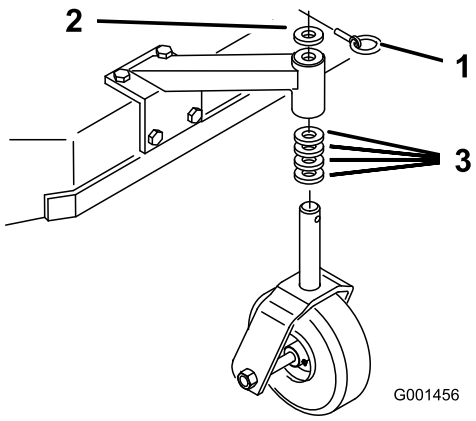

Figure 13

1. Latch pin
2. Spacer, 3/16 inch (5 mm)
3. Spacer, 1/2 inch (13 mm)

2. Remove the latch pin, slide the caster from the support, and change the spacers (Figure 13).
3. Install the caster in the support and insert the latch pin (Figure 13).

Adjusting the Handle Height

The handle position can be adjusted to match the operator's height preference.

1. Remove the hairpin cotter pins and clevis pins from the drive levers and neutral locks (Figure 14).

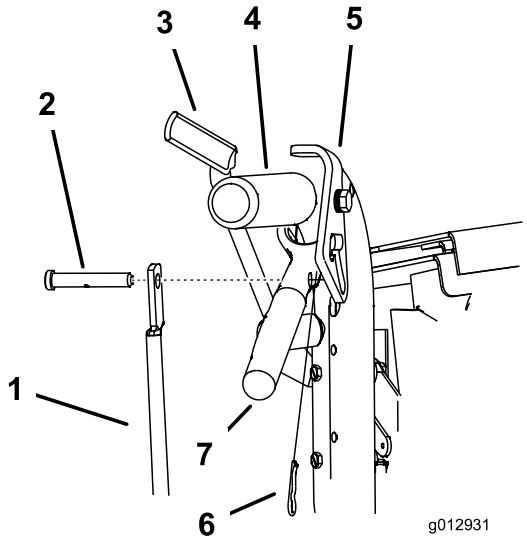

Figure 14

1. Control rod
2. Clevis pin
3. Operator Presence Control lever (OPC)
4. Handle
5. Neutral lock
6. Hairpin cotter pin
7. Drive lever

2. Loosen the upper bolts (3/8 x 1-1/4 inches) and flange nut securing handle to rear frame (Figure 15).
3. Remove the lower bolts (3/8 x 1 inch) and flange nuts securing handle to rear frame (Figure 15).
4. Pivot the handle to the desired operating position and install the lower flange bolts (3/8 x 1 inch)and flange nuts into the mounting holes. Tighten all flange bolts.

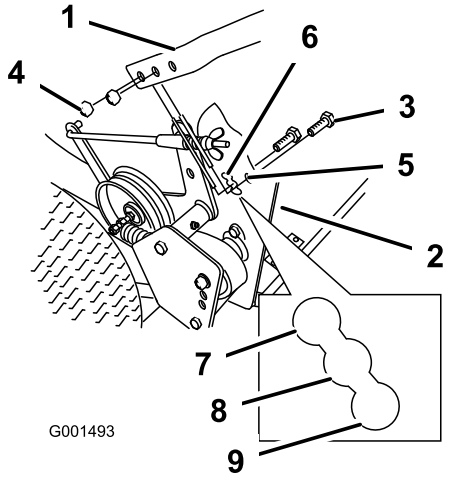

Figure 15

1. Upper handle
2. Rear frame
3. Flange bolt (3/8 x 1 inch)
4. Lock nut (3/8 inch)
5. Upper mounting hole
6. Lower mounting holes
7. Low position
8. Middle position
9. High position

5. Adjust the control rod length by rotating the control rod in the rod fitting (Figure 14).
6. Install a hairpin cotter between the drive levers and neutral locks and into the clevis pins (Figure 14).

   Note: Make sure the clevis pins are inserted into the neutral locks.
7. Check the parking brake adjustment. Refer to Checking the Brakes in Brake Maintenance (page 28).

Height of Cut Chart

Axle Position	Number of spacers below caster		Number of 1/4 inch blade spacers below spindle				
	1/2 inch (13mm)	3/16 inch (5 mm)	4	3	2	1	0
A	0	0	1 inch (26 mm)	1–1/4 inch (32 mm)	1–1/2 inch (38 mm)	1–3/4 inch (45 mm)	2 inch (51 mm)
A	0	1	1–1/8 inch (29 mm)	1–3/8 inch (35 mm)	1–5/8 inch (41 mm)	1–7/8 inch (48 mm)	2–1/8 inch (54 mm)
A	1	0	1–3/8 inch (35 mm)	1–5/8 inch (41 mm)	1–7/8 inch (48 mm)	2–1/8 inch (54 mm)	2–3/8 inch (60 mm)
B	0	1	1–3/8 inch (35 mm)	1–5/8 inch (41 mm)	1–7/8 inch (48 mm)	2–1/8 inch (54 mm)	2–3/8 inch (60 mm)
B	1	0	1–5/8 inch (41 mm)	1–7/8 inch (48 mm)	2–1/8 inch (54 mm)	2–3/8 inch (60 mm)	2–5/8 inch (67 mm)
B	1	1	1–3/4 inch (45 mm)	2 inch (51 mm)	2–1/4 inch (57 mm)	2–1/2 inch (64 mm)	2–3/4 inch (70 mm)
B	2	0	2 inch (51 mm)	2–1/4 inch (57 mm)	2–1/2 inch (64 mm)	2–3/4 inch (70 mm)	3 inch (76 mm)
C	1	1	1–7/8 inch (48 mm)	2–1/8 inch (54 mm)	2–3/8 inch (60 mm)	2–5/8 inch (67 mm)	2–7/8 inch (73 mm)
C	2	0	2–1/8 inch (55 mm)	2–3/8 inch (60 mm)	2–5/8 inch (67 mm)	2–7/8 inch (73 mm)	3–1/8 inch (79 mm)
C	2	1	2–1/4 inch (57 mm)	2–1/2 inch (64 mm)	2–3/4 inch (70 mm)	3 inch (76 mm)	3–1/4 inch (83 mm)
C	3	0	2–1/2 inch (64 mm)	2–3/4 inch (70 mm)	3 inch (76 mm)	3–1/4 inch (83 mm)	3–1/2 inch (89 mm)
D	2	1	2–3/8 inch (61 mm)	2–5/8 inch (67 mm)	2–7/8 inch (73 mm)	3–1/8 inch (79 mm)	3–3/8 inch (86 mm)
D	3	0	2–1/2 inch (64 mm)	2–3/4 inch (70 mm)	3 inch (76 mm)	3–1/4 inch (82 mm)	3–1/2 inch (89 mm)
D	3	1	2–3/4 inch (70 mm)	3 inch (76 mm)	3–1/4 inch (82 mm)	3–1/2 inch (89 mm)	3–3/4 inch (95 mm)
D	4	0	3 inch (76 mm)	3–1/4 inch (82 mm)	3–1/2 inch (89 mm)	3–3/4 inch (95 mm)	4 inch (102 mm)
E	3	1	2–7/8 inch (73 mm)	3–1/8 inch (79 mm)	3–3/8 inch (86 mm)	3–5/8 inch (92 mm)	3–7/8 inch (98 mm)
E	4	0	3–1/8 inch (79 mm)	3–3/8 inch (86 mm)	3–5/8 inch (92 mm)	3–7/8 inch (98 mm)	4–1/8 inch (105 mm)
E	4	1	3–1/4 inch (82 mm)	3–1/2 inch (89 mm)	3–3/4 inch (95 mm)	4 inch (102 mm)	4–1/4 inch (108 mm)

Maintenance

Note: Determine the left and right sides of the machine from the normal operating position.

Recommended Maintenance Schedule(s)

Maintenance Service Interval	Maintenance Procedure
After the first 8 hours	• Change the engine oil. • Check the mower belt tension.
After the first 25 hours	• Check the mower belt tension.
Before each use or daily	• Check the safety system. • Grease the caster wheels and caster pivot. • Check the engine oil level. • Clean the air intake screen. • Clean the air intake screen. • Check the brakes. • Inspect the blades. • Clean the mower deck.
Every 25 hours	• Clean foam air cleaner element.
Every 50 hours	• Grease the mower belt idler. • Check the paper air cleaner element. • Check the tire pressure. • Check the belts. • Check the mower belt tension.
Every 100 hours	• Change the engine oil. • Check the spark plugs. • Check and clean engine cooling fins and shrouds.
Every 200 hours	• Replace the paper air cleaner element. • Change the oil filter. • Replace the fuel filter.
Every 250 hours	• Grease the transmission couplers (more often in dirty or dusty conditions).
Every 400 hours	• Grease the wheel bearings (more often in dirty or dusty conditions).
Before storage	• Paint chipped surfaces. • Perform all maintenance procedures listed above before storage.

Important: **Refer to your engine operator's manual for additional maintenance procedures.**

⚠ CAUTION

If you leave the key in the ignition switch, someone could accidently start the engine and seriously injure you or other bystanders.

Remove the key from the ignition and disconnect the spark plug wire from the spark plug(s) before you do any maintenance. Set the wire aside so that it does not accidentally contact the spark plug.

Lubrication

Grease with No. 2 general purpose lithium base or molybdenum base grease.

How to Grease

1. Disengage the PTO and set the parking brake.
2. Stop the engine, remove the key, and wait for all moving parts to stop before leaving the operating position.
3. Clean the grease fittings with a rag. Make sure to scrape any paint off the front of the fitting(s).
4. Connect a grease gun to the fitting. Pump grease into the fittings until grease begins to ooze out of the bearings.
5. Wipe up any excess grease.

Lubricating the Caster and Wheel Bearings

1. Lubricate the front wheel bearings and front spindles (Figure 16).
2. Lubricate the drive wheel bearings.

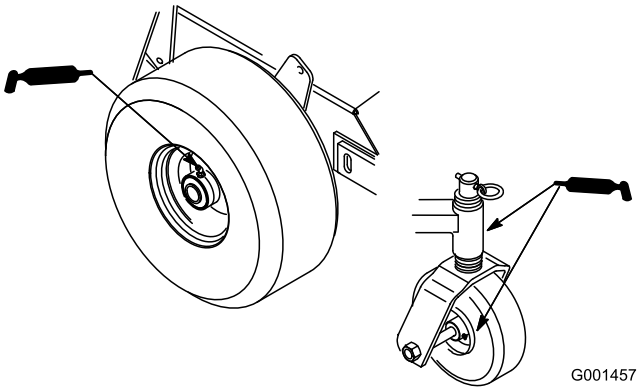

Figure 16

Greasing the Transmission Couplers

Lubricate the transmission couplers located in the back of the machine (Figure 17).

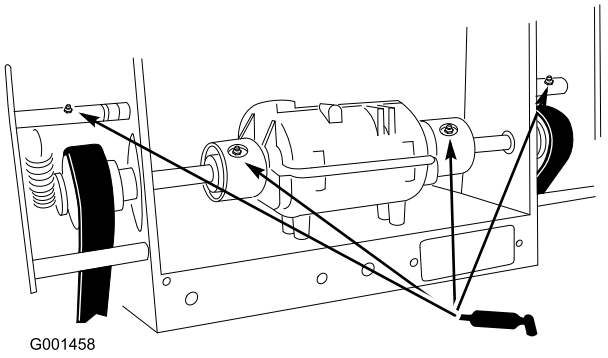

Figure 17

Greasing the Mower Belt Idler

Grease the fitting on the mower belt idler arm pivot (Figure 18).

Note: Remove the mower deck cover to access the grease fitting for the mower belt idler arm.

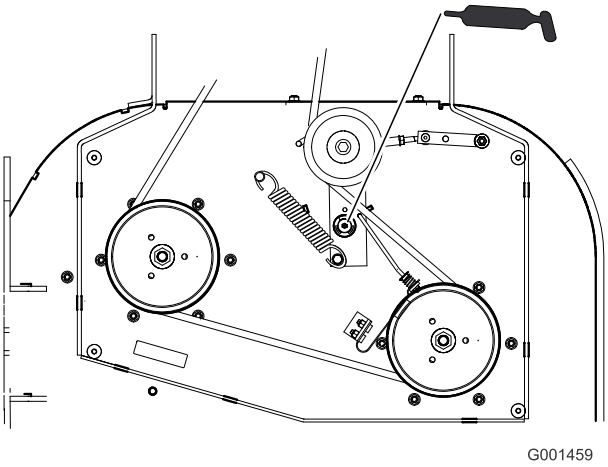

Figure 18

Engine Maintenance

Servicing the Air Cleaner

Service Interval/Specification

Service Interval: Every 25 hours—Clean foam air cleaner element.

Every 50 hours—Check the paper air cleaner element.

Every 200 hours—Replace the paper air cleaner element.

Note: Service the air cleaner more frequently (every few operating hours) if the operating conditions are extremely dusty or sandy.

Important: Do not oil the foam or paper element.

Removing the Foam and Paper Elements

1. Disengage the PTO and set the parking brake.
2. Stop the engine, remove the key, and wait for all moving parts to stop before leaving the operating position.
3. Clean around the air cleaner to prevent dirt from getting into the engine and causing damage (Figure 19).
4. Unscrew the cover knobs and remove the air cleaner cover (Figure 19).
5. Unscrew the hose clamp and remove the air cleaner assembly (Figure 19).
6. Carefully pull the foam element off the paper element (Figure 19).

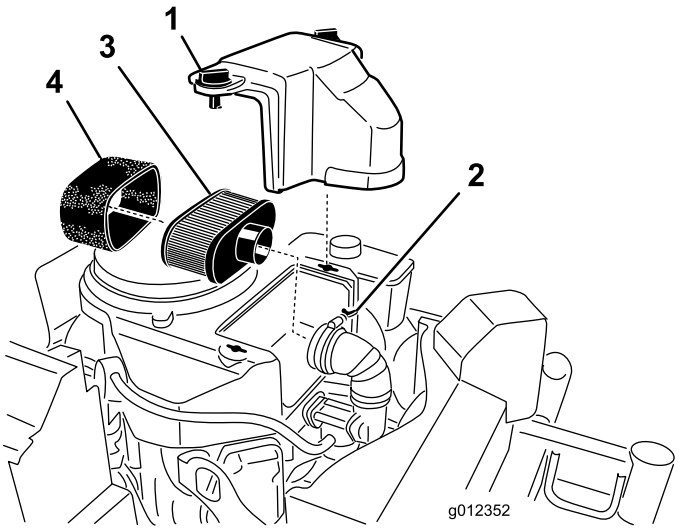

Figure 19

1. Cover
2. Hose clamp
3. Paper element
4. Foam element

Cleaning the Foam Air Cleaner Element

1. Wash the foam element in liquid soap and warm water. When the element is clean, rinse it thoroughly.
2. Dry the element by squeezing it in a clean cloth.

Important: Replace the foam element if it is torn or worn.

Servicing the Paper Air Cleaner Element

1. Do not clean the paper filter, replace it (Figure 19).
2. Inspect the element for tears, an oily film, or damage to the rubber seal.
3. Replace the paper element if it is damaged.

Installing the Foam and Paper Elements

Important: To prevent engine damage, always operate the engine with the complete foam and paper air cleaner assembly installed.

1. Carefully slide the foam element onto the paper air cleaner element (Figure 19).
2. Place the air cleaner assembly onto the air cleaner base and secure it with the 2 wing nuts (Figure 19).
3. Place the air cleaner cover into position and tighten the cover knob (Figure 19).

Servicing the Engine Oil

Service Interval/Specification

Service Interval: Before each use or daily—Check the engine oil level.

After the first 8 hours—Change the engine oil.

Every 100 hours—Change the engine oil.

Every 200 hours—Change the oil filter.

Note: Change the oil more frequently when the operating conditions are extremely dusty or sandy.

Oil Type: Detergent oil (API service SF, SG, SH, SJ or SL)

Crankcase Capacity: 58 ounces (1.7 liter) with the filter removed; 51 ounces (1.5 liter) without the filter removed

Viscosity: Refer to the table (Figure 20).

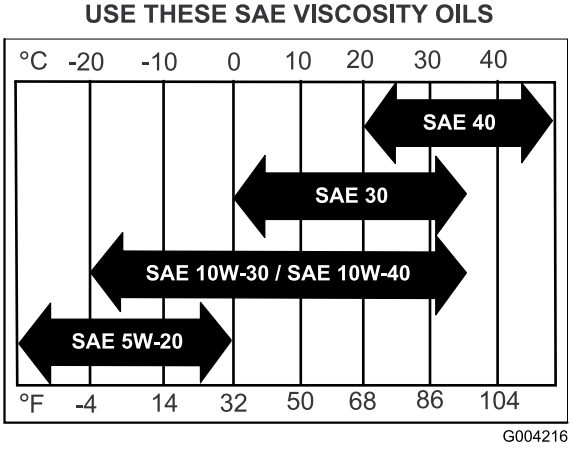

Figure 20

Checking the Engine Oil Level

1. Park the machine on a level surface.
2. Disengage the PTO and set the parking brake.
3. Stop the engine, remove the key, and wait for all moving parts to stop before leaving the operating position.
4. Clean around the oil dipstick (Figure 21) so that dirt cannot fall into the filler hole and damage the engine.

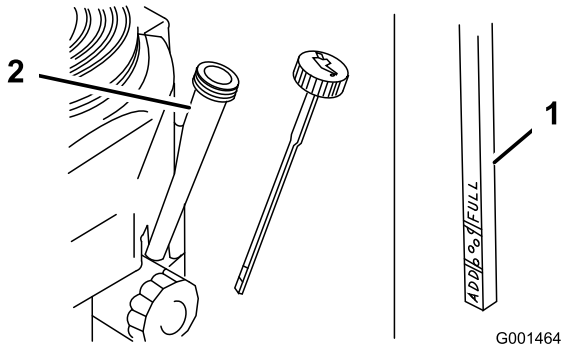

Figure 21

1. Oil dipstick
2. Filler tube

5. Unscrew the oil dipstick and wipe the end clean (Figure 21).
6. Slide the oil dipstick fully into the filler tube, but do not thread onto tube (Figure 21).
7. Pull the dipstick out and look at the end. If the oil level is low, slowly pour only enough oil into the filler tube to raise the level to the Full mark.

Important: Do not overfill the crankcase with oil and run the engine; engine damage can result.

Changing the Engine Oil

1. Start the engine and let it run five minutes. This warms the oil so it drains better.
2. Park the machine so that the drain side is slightly lower than the opposite side to assure the oil drains completely.
3. Disengage the PTO and set the parking brake.
4. Stop the engine, remove the key, and wait for all moving parts to stop before leaving the operating position.
5. Slide the drain hose over the oil drain valve.
6. Place a pan below the drain hose. Rotate oil drain valve to allow oil to drain (Figure 22).
7. When oil has drained completely, close the drain valve.
8. Remove the drain hose (Figure 22).

Note: Dispose of the used oil at a recycling center.

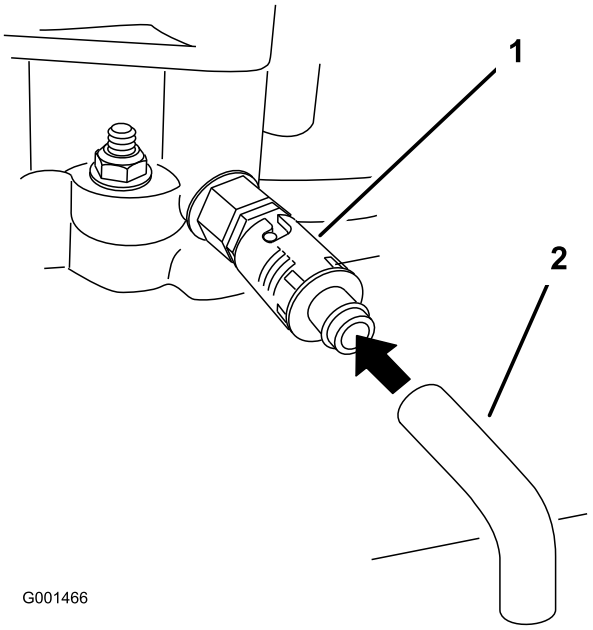

Figure 22

1. Oil drain valve
2. Oil drain hose

9. Slowly pour approximately 80% of the specified oil into the filler tube (Figure 21).
10. Check the oil level; refer to Checking the Engine Oil Level.
11. Slowly add the additional oil to bring it to the **Full** mark.

Changing the Oil Filter

Note: Change the oil filter more frequently when the operating conditions are extremely dusty or sandy.

1. Drain the oil from the engine; refer to Changing the Engine Oil.
2. Remove the old filter (Figure 23).

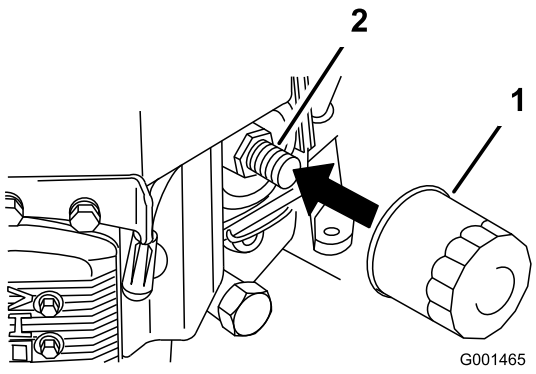

Figure 23

1. Oil filter
2. Adapter

3. Apply a thin coat of new oil to the rubber gasket on the replacement filter (Figure 23).
4. Install the replacement oil filter to the filter adapter, turn the oil filter clockwise until the rubber gasket contacts the filter adapter, then tighten the filter an additional 3/4 turn (Figure 23).
5. Fill the crankcase with the proper type of new oil; refer to Servicing the Engine Oil.
6. Run the engine for about 3 minutes, stop the engine, and check for oil leaks around the oil filter and drain valve.
7. Check the engine oil level and add oil if needed.
8. Wipe up any spilled oil.

Servicing the Spark Plugs

Service Interval/Specification

Service Interval: Every 100 hours—Check the spark plugs.

Ensure that the air gap between the center and side electrodes is correct before installing the spark plug. Use a spark plug wrench for removing and installing the spark plugs and a gapping tool/feeler gauge to check and adjust the air gap. Install a new spark plugs if necessary.

Type: Champion® RCJ8Y or equivalent Air Gap: 0.030 inch (0.75 mm)

Removing the Spark Plugs

1. Disengage the PTO and set the parking brake.
2. Stop the engine, remove the key, and wait for all moving parts to stop before leaving the operating position.
3. Disconnect the wires from the spark plugs (Figure 24).

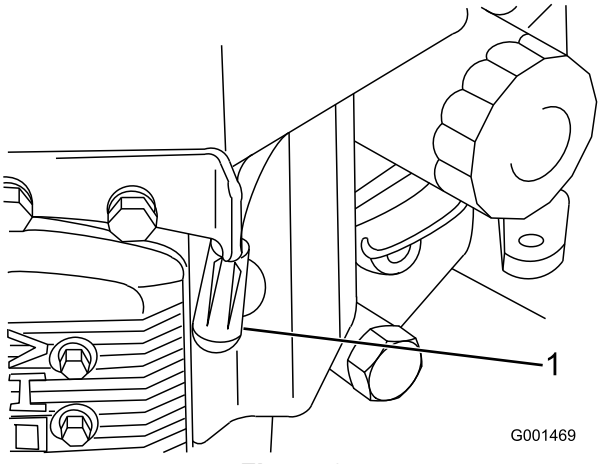

Figure 24

1. Spark-plug wire/spark plug

4. Clean around the spark plugs to prevent dirt from falling into the engine and potentially causing damage.
5. Remove the spark plugs and the metal washers.

Checking the Spark Plugs

1. Look at the center of the spark plugs (Figure 25). If you see light brown or gray on the insulator, the engine is operating properly. A black coating on the insulator usually means that the air cleaner is dirty.
2. If needed, clean the spark plug with a wire brush to remove carbon deposits.

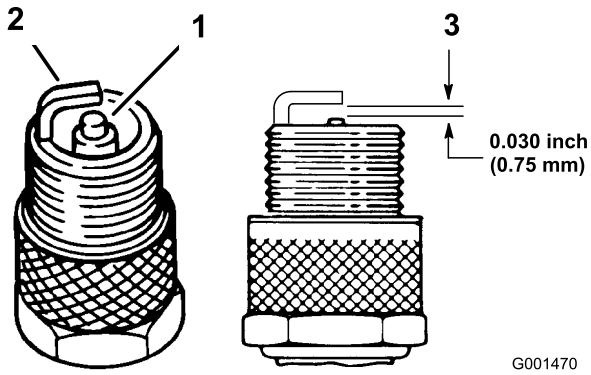

Figure 25

1. Center electrode insulator
2. Side electrode
3. Air gap (not to scale)

Important: Always replace the spark plugs when it has worn electrodes, an oily film on it, or has cracks in the porcelain.

3. Check the gap between the center and side electrodes (Figure 25). Bend the side electrode (Figure 25) if the gap is not correct.

Installing the Spark Plugs

1. Install the spark plugs and the metal washer. Ensure that the air gap is set correctly.
2. Tighten the spark plugs to 16 ft-lb (22 N-m).
3. Connect the wires to the spark plugs (Figure 25).

Fuel System Maintenance

Draining the Fuel Tank

⚠ DANGER

In certain conditions, gasoline is extremely flammable and highly explosive. A fire or explosion from gasoline can burn you and others and can damage property.

- **Drain gasoline from the fuel tank when the engine is cold. Do this outdoors in an open area. Wipe up any gasoline that spills.**
- **Never smoke when draining gasoline, and stay away from an open flame or where a spark may ignite the gasoline fumes.**

1. Park the machine on a level surface, to assure fuel tank drains completely. Then disengage the power take off (PTO), set the parking brake, and turn the ignition key to **off**. Remove the key.
2. Close the fuel shut-off valve at the fuel tank (Figure 26).
3. Squeeze the ends of the hose clamp together and slide it up the fuel line away from fuel filter (Figure 26).
4. Pull the fuel line off the fuel filter (Figure 26). Open the fuel shut-off valve and allow the gasoline to drain into a gas can or drain pan.

   Note: Now is the best time to install a new fuel filter because the fuel tank is empty. Refer to Replacing the Fuel Filter.
5. Install the fuel line onto the fuel filter. Slide the hose clamp close to the valve to secure the fuel line.

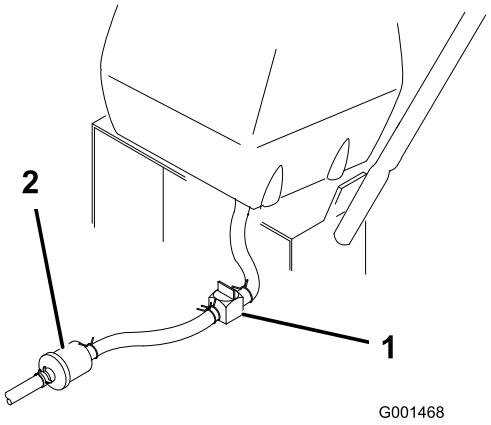

Figure 26

1. Fuel shut-off valve
2. Fuel filter

6. Wipe up any spilled fuel.

Replacing the Fuel Filter

Service Interval: Every 200 hours/Yearly (whichever comes first)

Never install a dirty filter if it is removed from the fuel line.

Note: Note how the fuel filter is installed in order to install the new filter correctly.

Note: Wipe up any spilled fuel.

1. Disengage the PTO and set the parking brake.
2. Stop the engine, remove the key, and wait for all moving parts to stop before leaving the operating position.
3. Close fuel shut-off valve at the fuel tank (Figure 26).
4. Squeeze the ends of the hose clamps together and slide them away from the filter (Figure 27).

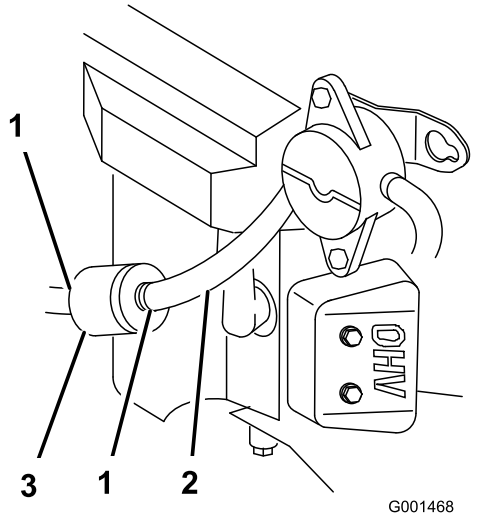

Figure 27

1. Hose clamp
2. Fuel line
3. Filter

5. Remove the filter from the fuel lines.
6. Install a new filter and move the hose clamps close to the filter.
7. Open fuel shut-off valve at fuel tank (Figure 26).
8. Check for fuel leaks and repair if needed.
9. Wipe up any spilled fuel.

Drive System Maintenance

Checking the Tire Pressure

Service Interval: Every 50 hours/Monthly (whichever comes first)

Maintain the air pressure in the rear tires at 12-14 psi (83-97 kPa). Uneven tire pressure can cause an uneven cut.

Note: The front tires are semi-pneumatic tires and do not require air pressure maintenance.

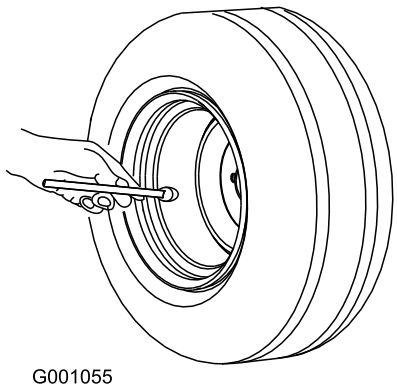

Figure 28

Cooling System Maintenance

Cleaning the Air Intake Screen

Before each use remove any build-up of grass, dirt or other debris from the cylinder and cylinder head cooling fins, air intake screen on flywheel end, and carburetor-governor levers and linkage. This will help insure adequate cooling and correct engine speed and will reduce the possibility of overheating and mechanical damage to the engine.

Cleaning the Cooling System

Service Interval: Every 100 hours/Yearly (whichever comes first)

Before each use or daily

Clean the air intake screen from grass and debris before each use.

1. Disengage the PTO and set the parking brake.
2. Stop the engine, remove the key, and wait for all moving parts to stop before leaving the operating position.
3. Remove the air intake screen, recoil starter and fan housing (Figure 29).
4. Clean the debris and grass from the engine parts.
5. Install air intake screen, recoil starter and fan housing (Figure 29).

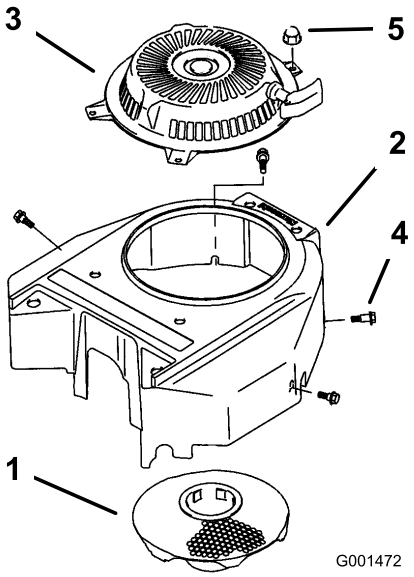

Figure 29

1. Air intake screen
2. Fan housing
3. Recoil starter
4. Bolt
5. Nut

Brake Maintenance

Servicing the Brakes

Before each use, check brakes on both a level surface and slope.

Always set the parking brake when you stop the machine or leave it unattended. If the parking brake does not hold securely, an adjustment is required.

Checking the Brakes

1. Park the machine on a level surface, disengage the blade control (PTO).
2. Stop the engine, remove the key, and wait for all moving parts to stop before leaving the operating position.
3. Apply the parking brakes. The wheels must lock when you try to push the machine forward.
4. If the wheels do not lock, adjust the brakes. Refer to Adjusting the Brakes.
5. Release the brakes and move the neutral/brake locks to the neutral position.. The wheels should rotate freely, if not; refer to Adjusting the Brakes.

Adjusting the Brakes

If the parking brakes do not hold securely, adjust them.

1. Check the brakes before you adjust them; refer to Checking the Brakes.
2. Release the parking brakes; refer to Releasing the Parking Brakes.
3. To adjust the brakes, rotate the wing nuts on the brake rods (Figure 30). Rotate the wing nuts clockwise to tighten the brakes; rotate them counterclockwise to loosen them.

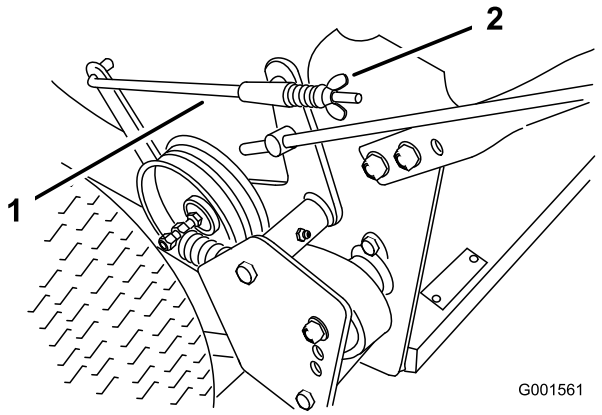

Figure 30

1. Brake rod
2. Wing nut

4. Position the wing nuts so that the brakes engage when you squeeze the drive levers enough to place the neutral/parking brake locks forward, and then set the brakes.
5. Check the operation of the brakes again; refer to Checking the Brakes.

   Important: When you release the parking brakes, the rear wheels should rotate freely when you push the mower. If they do not, contact an Authorized Service Dealer immediately.
6. Check the control rod length, refer to Adjusting the Control Rods.

Belt Maintenance

Checking the Belts

Service Interval: Every 50 hours/Monthly (whichever comes first)—Check the belts.

Check belts for cracks, frayed edges, burn marks, wear, signs of overheating or any other damage. Replace damaged belts.

Replacing the Traction Drive Belt

1. Remove hairpin cotter securing brake rod to brake arm to relax belt idler tension (Figure 31).
2. Remove bottom and loosen top bolts of shield to rotate for belt clearance (Figure 31).
3. Lift the belt past idler and off the drive pulley (Figure 31).
4. Raise the wheel off ground enough to allow belt removal.
5. Replace the traction drive belt.
6. Secure shield with previously removed bolt and tighten bolts (Figure 31).
7. Secure brake rod to brake arm with hairpin cotter (Figure 31).

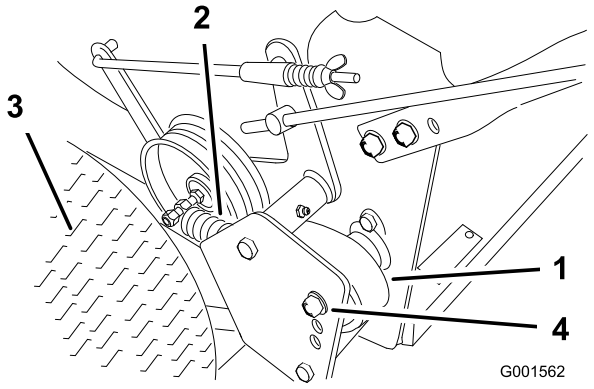

Figure 31

1. Drive belt
2. Drive spring
3. Tire
4. Adjustment bolt

Replacing the Drive Belt

1. Disengage the blade control (PTO) lever and set the parking brakes.
2. Stop the engine and wait for all moving parts to stop before leaving the operating position.
3. Raise the rear of the machine and hold it up with jack stands.

4. Remove the mower belt (Figure 32).

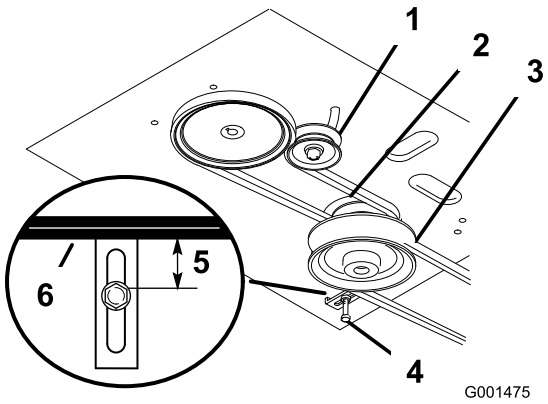

Figure 32

1. Idler pulley in slot
2. Traction belt
3. Mower belt
4. Belt guide
5. 3/4 inch (19 mm)
6. Mower belt

5. Loosen the pivot bolt enough to slide the idler pulley in the slot and remove the traction belt from the engine and the drive pulleys (Figure 32).
6. Install the new drive belt around the engine and the drive pulleys (Figure 32).
7. Slide the idler pulley in the engine frame to tension the traction belt (Figure 32).
8. Install the mower belt (Figure 32).
9. Check the belt guide under the engine frame for the proper adjustment (Figure 32).

   Note: The distance between the belt guide and mower belt should be 3/4 inch (19 mm) when the mower belt is engaged. Adjust the belt if necessary. The disengaged belt should not drag or fall off the pulley when the guides are properly adjusted.

Replacing the Mower Belt

Important: The brake needs to be adjusted when the belt tension or the brake linkage is adjusted.

1. Disengage the blade control (PTO) lever and set the parking brakes.
2. Stop the engine and wait for all moving parts to stop before leaving the operating position.
3. Remove the knobs and the belt cover on the mower.
4. Remove the idler pulley and the worn belt.
5. Install the new mower belt.
6. Install the idler pulley.
7. Engage the blade control (PTO) lever and check the belt tension. Refer to Adjusting the Mower Belt Tension.

   Note: The proper mower belt tension is 10-15 lbf. (44-67 N) with the belt deflected 1/2 inch (13 mm) halfway between the pulleys (Figure 36 or Figure 37).
8. Engage the blade control (PTO) lever.
9. Check the clearance between the bell crank and the transmission output shaft (Figure 33).

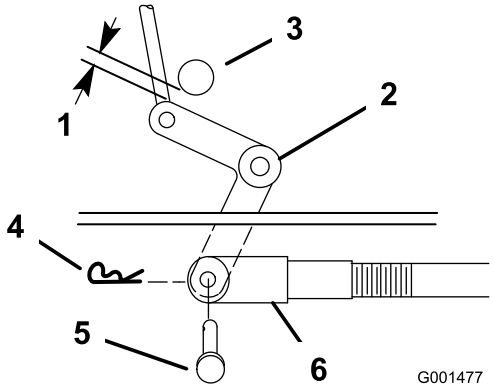

Figure 33

1. 1/16-1/8 inch (2-3 mm)
2. Bell crank
3. Transmission output shaft
4. Hairpin cotter
5. Clevis pin
6. Clevis

   Note: The clearance should be 1/16-1/8 inch (2-3 mm).
10. Remove the hairpin cotter pin and the clevis pin from the bell crank.
11. Rotate the clevis clockwise on the rod to increase the clearance; rotate it counterclockwise to decrease it (Figure 33).
12. Disengage the blade control (PTO) lever.

    Note: If the assist arm does not contact the front stop on the mower deck (Figure 34 or Figure 35), adjust the clevis to bring the bell crank closer to the transmission output shaft (Figure 33).

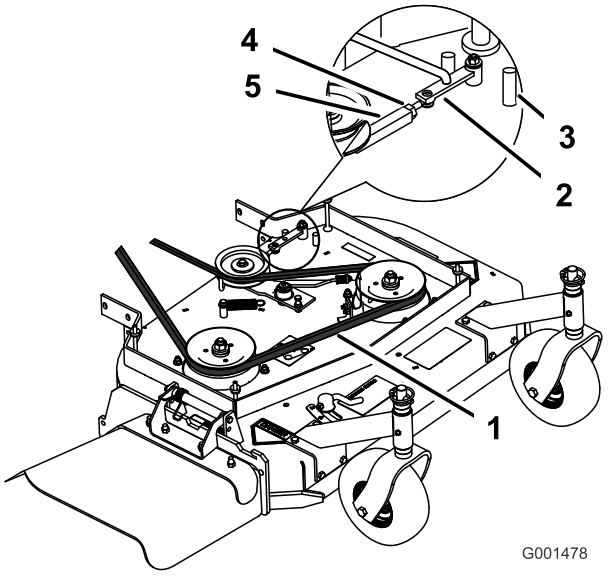

Figure 34
32in and 36in Mower Deck

1. 1/2 inch (13 mm) deflection here
2. Assist arm
3. Front stop
4. Locknut
5. Turnbuckle

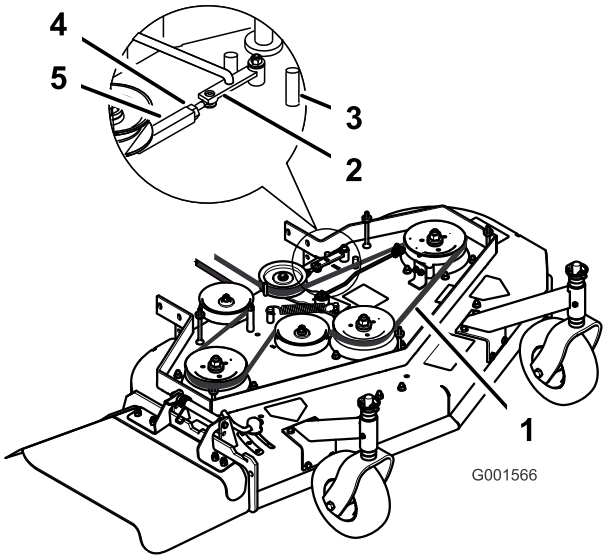

Figure 35
48in Mower Deck

13. Check the belt guide under the engine frame for the proper adjustment (Figure 32).

    Note: The distance between the belt guide and the mower belt should be 1-1/4 inch (32 mm) when you engage the mower belt. Adjust the mower belt as necessary. The disengaged belt should not drag or fall off the pulley when the guides are properly adjusted.

Adjusting the Mower Belt Tension

Adjusting the Tension for 32in and 36in Mower Decks

Service Interval: After the first 8 hours—Check the mower belt tension.

After the first 25 hours—Check the mower belt tension.

Every 50 hours—Check the mower belt tension.

Important: The brake needs to be adjusted when the belt tension or the brake linkage is adjusted.

Important: The belt must be tight enough to not slip during heavy loads while cutting grass. Over tensioning the belt will reduce the spindle bearing life, the belt life and the idler pulley life.

The belt must be tight enough so it does not slip during heavy loads while cutting grass and over-tensioning will reduce belt and spindle bearing life.

1. Disengage the blade control (PTO) lever and set the parking brakes.
2. Stop the engine and wait for all moving parts to stop before leaving the operating position.
3. Loosen the locknut on the turnbuckle (Figure 36).
4. Rotate the turnbuckle toward the rear of the mower to increase the tension on the belt. Rotate the turnbuckle toward the front of the mower to decrease the tension on the belt (Figure 36).

   Note: The eyebolt threads on both ends of the turnbuckle should be engaged a minimum of 5/16 inch (8 mm).
5. Engage the bladed control lever (PTO) and check the belt tension. Adjust tension until it is correct.

   Note: The proper mower belt tension is 10-15 lbf. (44-67 N) with the belt deflected 1/2 inch (13 mm) halfway between the pulleys (Figure 36).

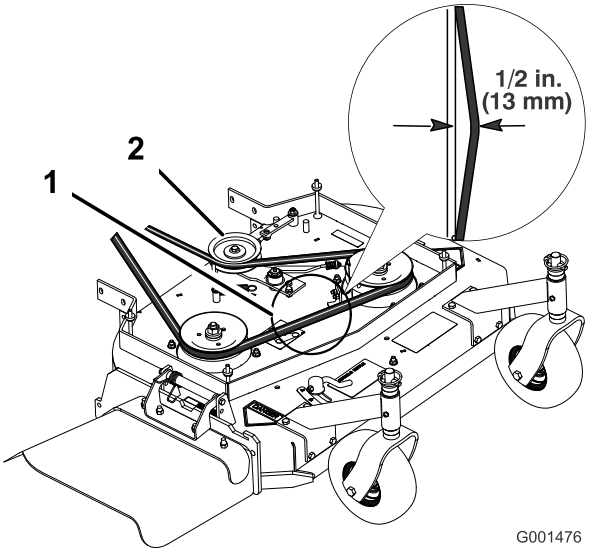

Figure 36
32in and 36in Mower Deck

1. Mower belt with 1/2 inch (13mm) deflection
2. Idler pulley

6. Tighten the locknut on the turnbuckle.
7. Check the blade brake adjustment; refer to Adjusting the Blade Brake.

Adjusting the Tension for 48in Mower Decks

Important: The belt must be tight enough to not slip during heavy loads while cutting grass. Over tensioning the belt will reduce the spindle bearing life, the belt life and the idler pulley life.

Important: The brake needs to be adjusted when the belt tension or the brake linkage is adjusted.

1. Disengage the blade control (PTO) lever and set the parking brakes.
2. Stop the engine and wait for all moving parts to stop before leaving the operating position.
3. Loosen the locknut on the turnbuckle (Figure 38).
4. Rotate the turnbuckle toward the rear of the mower to increase the tension on the belt. Rotate the turnbuckle toward the front of the mower to decrease the tension on the belt (Figure 38).

   Note: The proper mower belt tension is 10-15 lbf. (44-67 N) with the belt deflected 1/2 inch (13 mm) halfway between the pulleys (Figure 37).

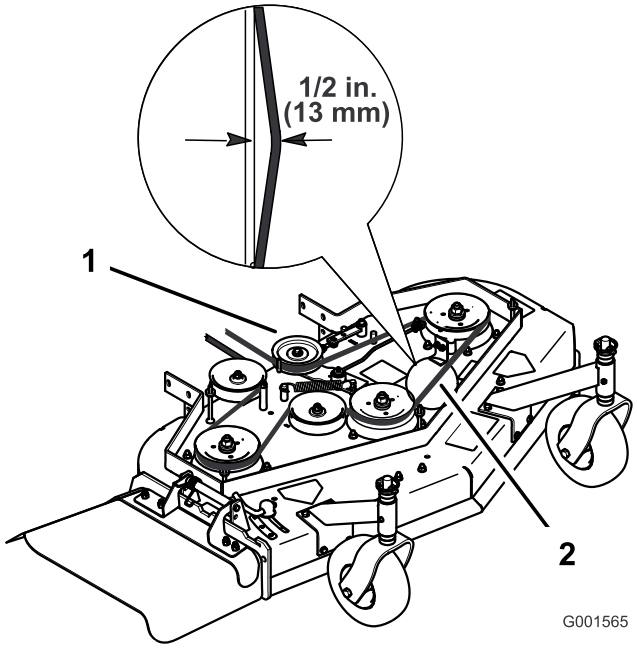

Figure 37
48in Mower Deck

1. Mower belt with 1/2 inch (13mm) deflection
2. Idler pulley

Note: The eyebolt threads on both ends of the turnbuckle should be engaged a minimum of 5/16 inch (8 mm).

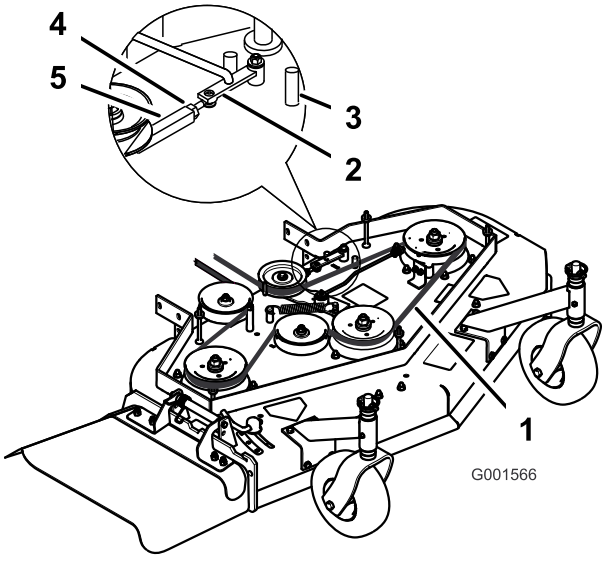

Figure 38

1. 1/2 inch (13 mm) deflection here
2. Assist arm
3. Front stop
4. Locknut
5. Turnbuckle

5. Engage the bladed control lever (PTO) and check the belt tension.

6. If there is no adjustment left in the turnbuckle and the belt is still loose, the rear idler pulley needs to be positioned to the middle or front hole (Figure 39). Use the hole that will give the correct adjustment.
7. When the idler pulley is moved the belt guide must be moved. Move the belt guide to the front position (Figure 39).

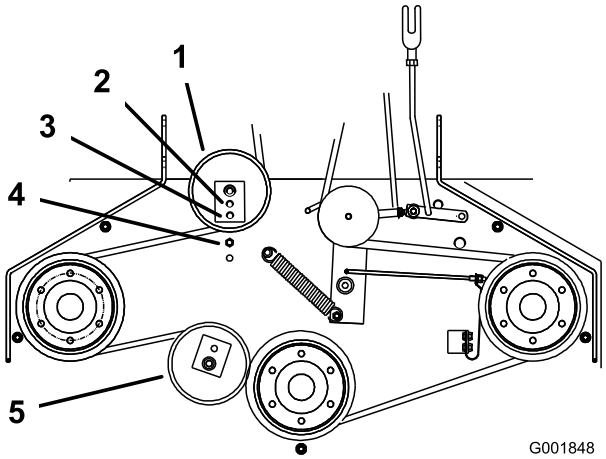

Figure 39

1. Rear idler pulley
2. Middle hole
3. Front hole
4. Belt guide in back position
5. Front idler pulley

8. Check the belt guide under the engine frame for proper adjustment (Figure 40).

   Note: The distance between the belt guide and the mower belt should be 3/4 inch (19 mm) when you engage the mower belt (Figure 40). Adjust the mower belt as necessary. The disengaged belt should not drag or fall off the pulley when the guides and belt tension are properly adjusted.
9. Check the blade brake adjustment; refer to Adjusting the Blade Brake.

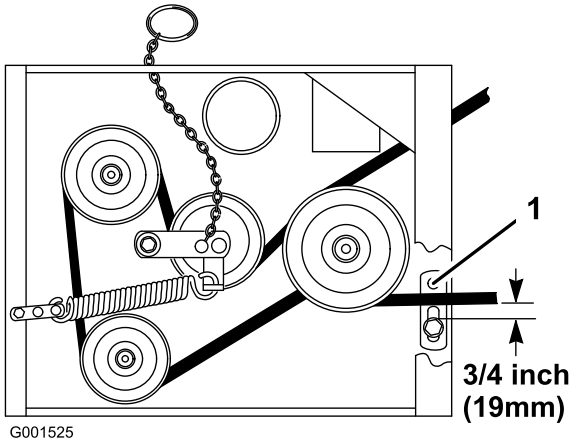

Figure 40

1. Belt guide

Adjusting the PTO Engagement Linkage

The PTO engagement linkage adjustment is located beneath the front left hand corner of the engine deck.

1. Disengage the blade control (PTO) lever and set the parking brakes.
2. Stop the engine and wait for all moving parts to stop before leaving the operating position.
3. Engage the blade control lever (PTO).
4. Adjust the linkage length to where the lower end of the bellcrank just clears the axle support gusset (Figure 41).

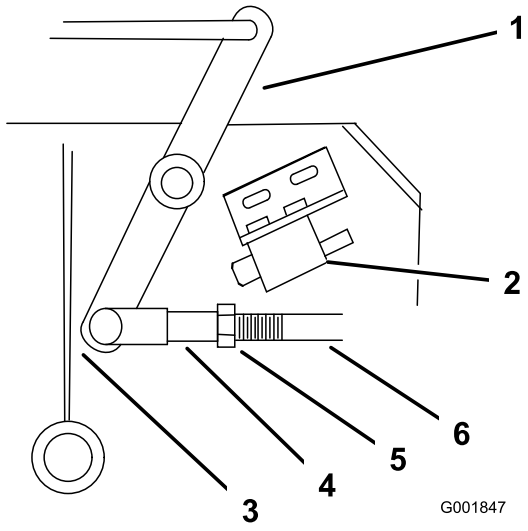

Figure 41

1. Bellcrank
2. Safety switch located under engine deck
3. Bellcrank just clears the gusset with the PTO engageded
4. Yoke
5. Nut
6. Assist arm link

5. Make sure the assist arm is against the rear assist arm stop on the deck (Figure 42).
6. Push the blade control lever (PTO) down to the disengaged position.
7. The assist arm should contact the front assist arm stop on the deck. If it does not contact, adjust the bellcrank so it is closer to the gusset (Figure 42).

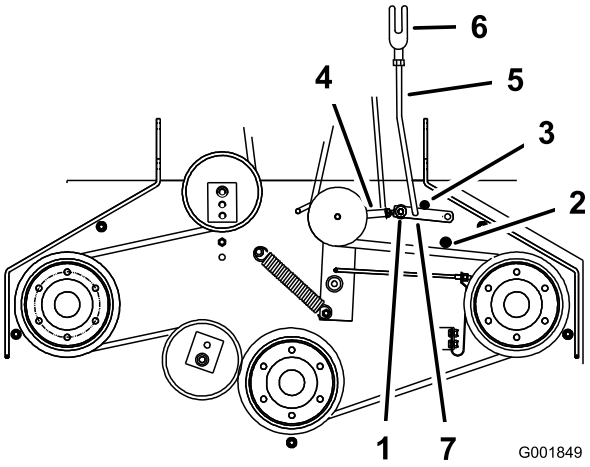

Figure 42

1. Yoke
2. Nut
3. Rear assist arm stop
4. Front assist arm stop
5. Assist arm link
6. Assist arm
7. Turnbuckle

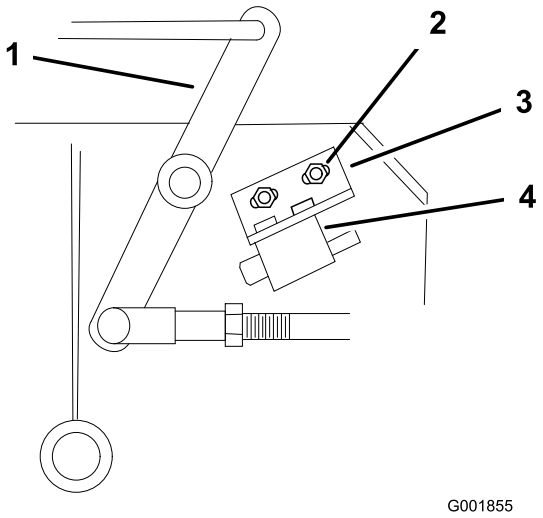

Figure 43

1. Bellcrank
2. Bolts and nuts
3. Switch mounting bracket
4. Switch body

8. To adjust the assist arm link, remove the hairpin cotter pin from the assist arm (Figure 42).
9. Loosen the nut against the yoke (Figure 41).
10. Remove the assist arm link from the assist arm and rotate the link to adjust the length.
11. Install the assist arm link into the assist arm and secure it with the hairpin cotter pin (Figure 42).
12. Check if the assist arm hits against the stops correctly.

Adjusting the PTO Safety Switch

1. Disengage the blade control (PTO) lever and set the parking brakes.
2. Stop the engine and wait for all moving parts to stop before leaving the operating position.
3. Disengage the blade control lever (PTO). Make sure the assist arm is against the front assist stop arm.
4. If needed, adjust the blade safety switch by loosening the bolts holding the switch bracket (Figure 43).
5. Move the mounting bracket until the bellcrank depresses the plunger by a 1/4 inch (6 mm).
6.

   Note: Make sure the bellcrank **does not** touch the switch body or damage to the switch could occur (Figure 43).
   Tighten the switch mounting bracket.

Controls System Maintenance

Adjusting the Control Rods

1. Remove the hairpin cotter pins and clevis pins from the drive levers and neutral locks (Figure 44).

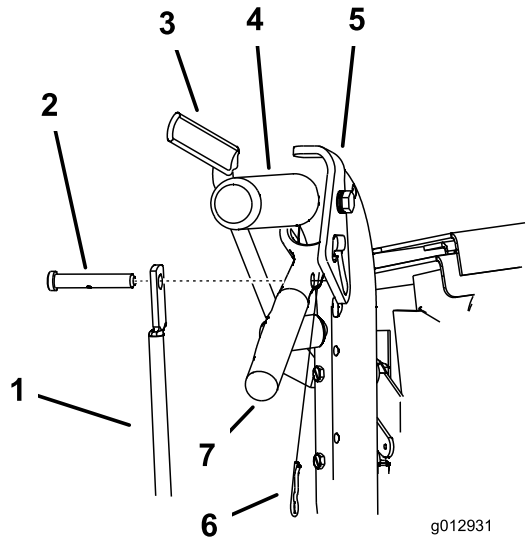

Figure 44

1. Control rod
2. Clevis pin
3. Operator Presence Control lever (OPC)
4. Handle
5. Neutral lock
6. Hairpin cotter pin
7. Left handle shown
8. Drive lever

2. Adjust the control rod length by threading the rod in or out of the rod fitting until there is a 3/16 to 1/4 inches (5 to 6 mm) clearance between the control rod and the bottom of the neutral/parking brake lock (Figure 45).

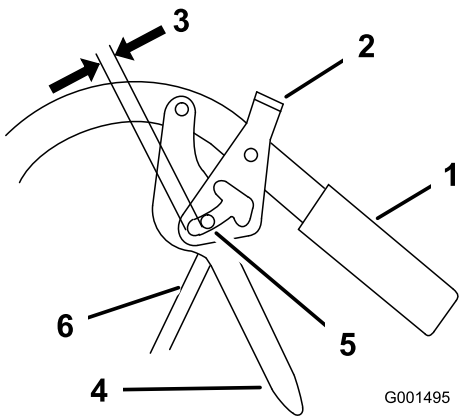

Figure 45

1. Handle
2. Neutral/ parking brake lock
3. 3/16 to 1/4 inch (5 to 6 mm) clearance
4. Drive lever
5. Forward speed
6. Control rod

3. Install the control rod to the drive lever and the neutral/parking brake lock. Secure the control rod with a clevis pin and a hairpin cotter (Figure 45).
4. Check the operation of the control rod. If you need to adjust it, remove the hairpin cotter and the clevis pin that secure the control rod to the drive levers.
5. Adjust the control rod length by repeating the previous steps.

Mower Deck Maintenance

Servicing the Cutting Blades

To ensure a superior quality of cut, keep the blades sharp. For convenient sharpening and replacement, you may want to keep extra blades on hand.

⚠ WARNING

A worn or damaged blade can break, and a piece of the blade could be thrown into the operator's or bystander's area, resulting in serious personal injury or death.

- **Inspect the blade periodically for wear or damage.**
- **Replace a worn or damaged blade.**

Before Inspecting or Servicing the Blades

Park the machine on a level surface, disengage the blade control bail and set the parking brake. Turn the ignition key to **off**. Remove the key and disconnect the spark plug wire(s) from the spark plug(s).

Inspecting the Blades

Service Interval: Before each use or daily

1. Inspect the cutting edges (Figure 46). If the edges are not sharp or have nicks, remove and sharpen the blades. Refer to Sharpening the Blades.

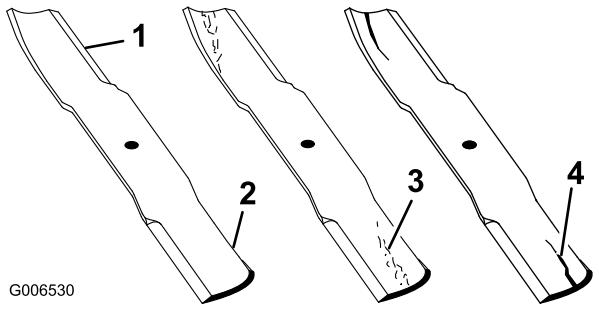

Figure 46

1. Cutting Edge
2. Sail
3. Wear/slot forming in curved area
4. Crack in the curved area

2. Inspect the blades, especially the curved area (Figure 46). If you notice any damage, wear, or a slot forming in this area (item 3. in Figure 46), immediately install a new blade.

Checking for Bent Blades

1. Rotate the blades until the ends face forward and backward (Figure 47).

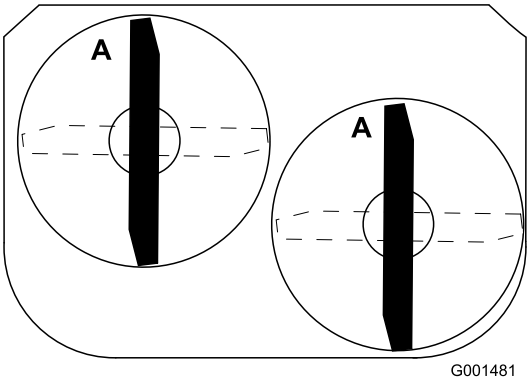

Figure 47

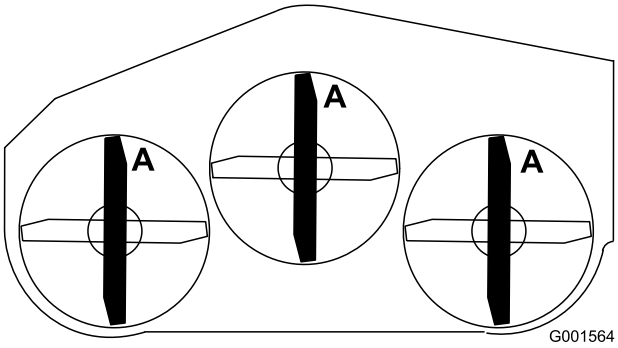

Figure 48

2. Measure from a level surface to the cutting edge, position A, of the blades (Figure 49). Note this dimension.

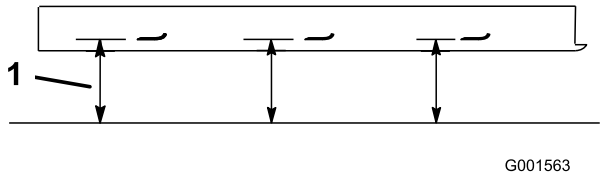

Figure 49

1. Measure from the cutting edge to a level surface

3. Rotate the opposite ends of the blades forward.
4. Measure from a level surface to the cutting edge of the blades at the same position as in step 1. The difference between the dimensions obtained in steps 1 and 2 must not exceed 1/8 inch (3 mm). If this dimension exceeds 1/8 inch (3 mm), the blade is bent and must be replaced. Refer to Removing the Blades and Installing the Blades.

⚠ WARNING

A blade that is bent or damaged could break apart and could seriously injure or kill you or bystanders.

- **Always replace bent or damaged blade with a new blade.**
- **Never file or create sharp notches in the edges or surfaces of blade.**

Removing the Blades

Replace the blades if you hit a solid object or if the blades are out of balance or bent. To ensure optimum performance and continued safety conformance of the machine, use genuine Toro replacement blades. Replacement blades made by other manufacturers may result in non-conformance with safety standards.

1. Hold the blade bolt with a wrench.
2. Remove the nut, blade bolt, curved washer, blade, spacers, and thin washer from the spindle (Figure 50).

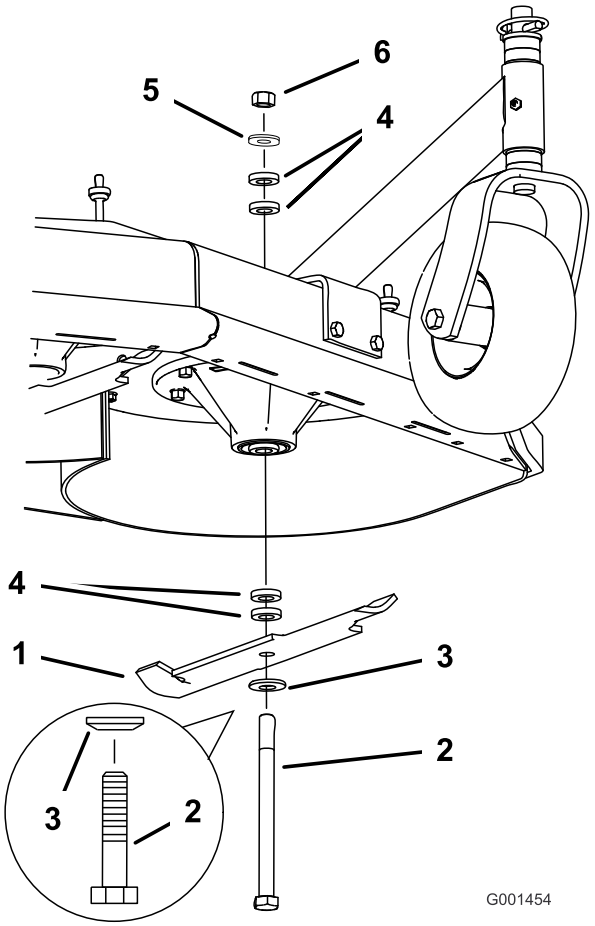

Figure 50

1. Blade
2. Blade bolt
3. Curved washer
4. Spacer
5. Thin washer
6. Nut

Sharpening the Blades

1. Use a file to sharpen the cutting edge at both ends of the blade (Figure 51). Maintain the original angle. The blade retains its balance if the same amount of material is removed from both cutting edges.

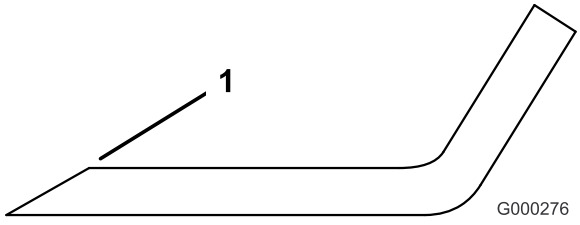

Figure 51

1. Sharpen at original angle

2. Check the balance of the blade by putting it on a blade balancer (Figure 52). If the blade stays in a horizontal position, the blade is balanced and can be used. If the blade is not balanced, file some metal off

the end of the sail area only (Figure 52). Repeat this procedure until the blade is balanced.

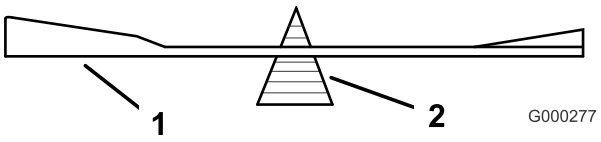

Figure 52

1. Blade
2. Balancer

Installing the Blades

1. Place the blade onto the bolt and over the curved washer. Select the proper number of spacer(s) for the height-of- cut, and slide the bolt into the spindle (Figure 50).

   Important: The curved part of the blade must point upward toward the inside of the mower to ensure proper cutting.

2. Install the remaining spacer(s) and secure them with a thin washer and a nut (Fig. Figure 50).
3. Torque the blade bolt to 75-80 ft-lb (101-108 N-m).

Adjusting the Blade Brake

1. Disengage the PTO, turn the ignition key to off, and remove the key.
2. Wait for all moving parts to stop before leaving the operating position and then set the parking brake.
3. If necessary, adjust the spring mounting bolts so that the blade brake pad rubs against both sides of the pulley groove (Figure 53).
4. Adjust the nut at the end of the blade brake rod until there is 1/8-3/16 inch (3 mm -5 mm) between the nut and spacer (Figure 53).
5. Engage the blades. Ensure the blade brake pad no longer contacts the pulley groove.

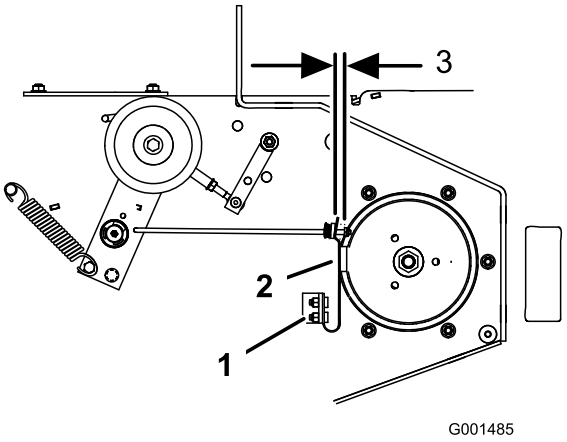

Figure 53

1. Spring mounting bolts
2. Blade brake pad
3. 1/8-3/16 inch (3mm-5mm)

Replacing the Grass Deflector

⚠ WARNING

An uncovered discharge opening could allow the lawn mower to throw objects in the operator's or bystander's direction and result in serious injury or death. Also, contact with the blade could occur.

Never operate the lawn mower unless you install a cover plate, a mulch plate, or a grass chute and catcher.

1. Remove the locknut, bolt, spring and spacer holding the deflector to the pivot brackets (Figure 54). Remove damaged or worn grass deflector.

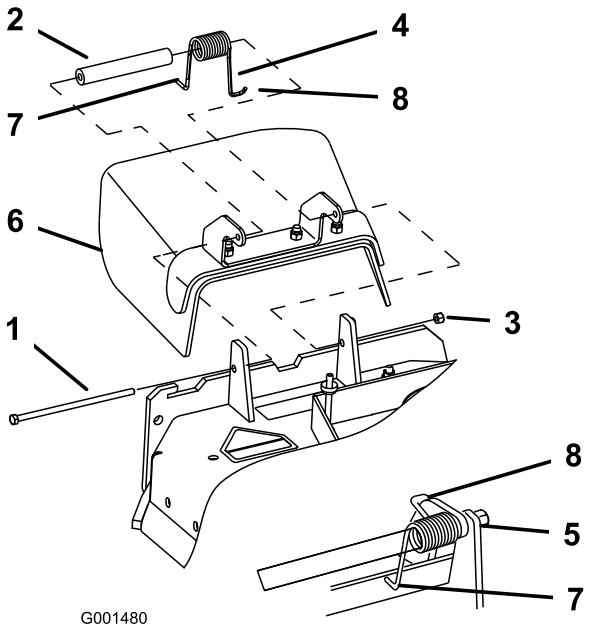

Figure 54

1. Bolt
2. Spacer
3. Locknut
4. Spring
5. Spring installed
6. Grass Deflector
7. **L** end of spring, place behind deck edge before installing bolt
8. **J** hook end of spring

2. Place spacer and spring onto grass deflector. Place the **L** end of spring behind deck edge.

   Note: Make sure the **L** end of spring is installed behind deck edge before installing the bolt as shown in Figure 54.

3. Install bolt and nut. Place the **J** hook end of spring around grass deflector (Figure 54).

   Important: The grass deflector must be able to rotate. Lift the deflector up to the full open position and ensure that it rotates into the full down position.

Storage

Cleaning and Storage

1. Disengage the power take off (PTO), set the parking brake, and turn the ignition key to off. Remove the key.
2. Remove grass clippings, dirt, and grime from the external parts of the entire machine, especially the engine. Clean dirt and chaff from the outside of the engine's cylinder head fins and blower housing.

   Important: You can wash the machine with mild detergent and water. Do not pressure wash the machine. Avoid excessive use of water, especially near the shift lever plate, and engine.
3. Check the brake; refer to Servicing the Brake in Brake Maintenance (page 28).
4. Service the air cleaner; refer to Servicing the Air Cleaner.
5. Grease the machine; refer to Greasing and Lubrication in Lubrication (page 21).
6. Change the crankcase oil; refer to Servicing the Engine in.
7. Check the tire pressure; refer to Checking the Tire Pressure in Drive System Maintenance (page 27).
8. For long-term storage:
   A. Add stabilizer/conditioner additive to fuel in the tank.
   B. Run engine to distribute conditioned fuel through the fuel system (5 minutes).
   C. Stop engine, allow to cool and drain the fuel tank; refer to Servicing the Fuel Tank in Fuel System Maintenance (page 25), or operate engine until it stops.
   D. Restart engine and run until it stops. Repeat, on Choke until engine will not restart.
   E. Dispose of fuel properly. Recycle as per local codes.

   Note: Do not store stabilizer/conditioned gasoline over 90 days.
9. Remove the spark plug(s) and check its condition; refer to Servicing the Spark Plug. With the spark plug(s) removed from the engine, pour two tablespoons of engine oil into the spark plug hole. Now use the starter to crank the engine and distribute the oil inside the cylinder. Install the spark plug(s). Do not install the wire on the spark plug(s).
10. Check and tighten all bolts, nuts, and screws. Repair or replace any part that is damaged or defective.

11. Paint all scratched or bare metal surfaces. Paint is available from your Authorized Service Dealer.
12. Store the machine in a clean, dry garage or storage area. Remove the key from the ignition switch and keep it in a memorable place. Cover the machine to protect it and keep it clean.

Troubleshooting

Problem	Possible Cause	Corrective Action
Engine will not start, starts hard, or fails to keep running.	1. Fuel tank is empty. 2. Fuel shut off valve is closed. 3. Choke is not on. 4. Air cleaner is dirty. 5. Spark plug wire is loose or disconnected. 6. Spark plug is pitted, fouled, or the gap is incorrect. 7. Dirt in the fuel filter. 8. Dirt, water, or stale fuel is in the fuel system.	1. Fill the fuel tank with gasoline. 2. Open the fuel shut off valve. 3. Move the throttle lever to choke position. 4. Clean or replace the air cleaner element. 5. Install the wire on spark plug. 6. Install a new, correctly gapped spark plug. 7. Replace the fuel filter. 8. Contact an Authorized Service Dealer.
Engine loses power.	1. Engine load is excessive. 2. Air cleaner is dirty. 3. Oil level in the crankcase is low. 4. Cooling fins and air passages under the engine blower housing are plugged. 5. Spark plug is pitted, fouled, or the gap is incorrect. 6. Vent hole in the fuel cap is plugged. 7. Dirt in the fuel filter. 8. Dirt, water, or stale fuel is in the fuel system.	1. Reduce the ground speed. 2. Clean the air cleaner element. 3. Add oil to the crankcase. 4. Remove the obstruction from the cooling fins and air passages. 5. Install a new, correctly gapped spark plug. 6. Clean or replace the fuel cap. 7. Replace the fuel filter. 8. Contact an Authorized Service Dealer.
Engine overheats.	1. Engine load is excessive. 2. Oil level in the crankcase is low. 3. Cooling fins and air passages under the engine blower housing are plugged.	1. Reduce the ground speed. 2. Add oil to the crankcase. 3. Remove the obstruction from the cooling fins and air passages.
Machine does not drive.	1. Shift lever is in neutral. 2. Traction belt is worn, loose or broken. 3. Traction belt is off a pulley. 4. Broken or missing idler spring.	1. Move shift lever to a drive gear position. 2. Change the belt. 3. Change the belt. 4. Replace the spring.
Abnormal vibration.	1. Cutting blade(s) is/are bent or unbalanced. 2. Blade mounting bolt is loose. 3. Engine mounting bolts are loose. 4. Loose engine pulley, idler pulley, or blade pulley. 5. Engine pulley is damaged. 6. Blade spindle is bent.	1. Install new cutting blade(s). 2. Tighten the blade mounting bolt. 3. Tighten the engine mounting bolts. 4. Tighten the appropriate pulley. 5. Contact an Authorized Service Dealer. 6. Contact an Authorized Service Dealer.
Uneven cutting height.	1. Blade(s) not sharp. 2. Cutting blade(s) is/are bent. 3. Mower is not level. 4. Underside of mower is dirty. 5. Tire pressure is not correct. 6. Blade spindle bent.	1. Sharpen the blade(s). 2. Install new cutting blade(s). 3. Level the mower from side-to-side and front-to-rear. 4. Clean the underside of the mower. 5. Adjust the tire pressure. 6. Contact an Authorized Service Dealer.

Problem	Possible Cause	Corrective Action
Blades do not rotate.	1. Mower deck belt is worn or loose.	1. Check the belt tension.
	2. Mower deck belt is broken.	2. Install a new deck belt.
	3. Mower deck belt is off pulley.	3. Inspect the belt and replace if damaged. Check the pulleys and idlers and adjust the belt tension.
	4. Broken or missing idler spring.	4. Replace the spring.

Schematics

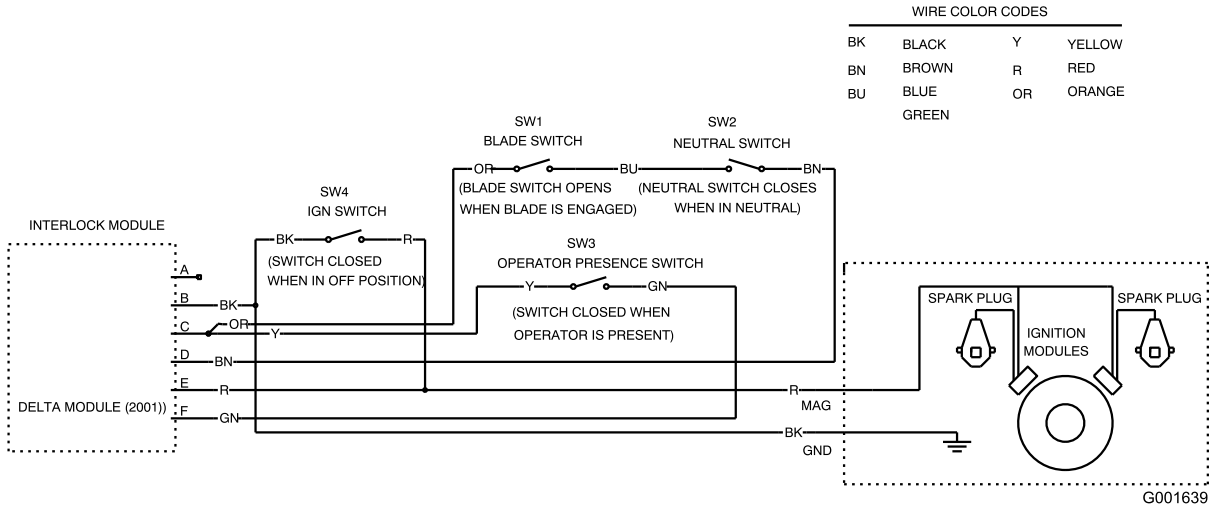

Electrical Schematic (Rev. A)

The Toro Total Coverage Warranty

A Limited Warranty (see warranty periods below)

Landscape Contractor Equipment (LCE)

Conditions and Products Covered

The Toro Company and its affiliate, Toro Warranty Company, pursuant to an agreement between them, jointly promise to the original purchaser to repair the Toro Products listed below if defective in materials or workmanship.

The following time periods apply from the date of purchase by the original owner:

Products	Warranty Period
All Mowers	
• Engine**	2 years
• Battery	1 year
• Attachments	1 year
Mid-Size Walk-Behind Mowers	2 years
Grand Stand™ Mowers	5 years or 1,200 hours*
• Frame	Lifetime (original owner only)***
Z Master® Z400, Z500 Mowers	4 years or 1,200 hours*
• Engine	2 years**
• Frame	Lifetime (original owner only)***
Z Master® G3 Mowers	5 years or 1,200 hours*
• Frame	Lifetime (original owner only)***

*Whichever occurs first.

**Some engines used on Toro LCE Products are warranted by the engine manufacturer.

***Lifetime Frame Warranty - If the main frame, consisting of the parts welded together to form the tractor structure that other components such as the engine are secured to, cracks or breaks in normal use, it will be repaired or replaced under warranty at no cost for parts and labor. Frame failure due to misuse or abuse and failure or repair required due to rust or corrosion are not covered.

This warranty includes the cost of parts and labor, but you must pay transportation costs.

Instructions for Obtaining Warranty Service

If you think that your Toro Product contains a defect in materials or workmanship, follow this procedure:

1. Contact any Authorized Toro Service Dealer to arrange service at their dealership. To locate a dealer convenient to you, refer to the Yellow Pages of your telephone directory (look under “Lawn Mowers”) or access our web site at www.Toro.com. You may also call the numbers listed in item #3 to use the 24-hour Toro Dealer locator system.
2. Bring the product and your proof of purchase (sales receipt) to the Service Dealer. The dealer will diagnose the problem and determine if it is covered under warranty.
3. If for any reason you are dissatisfied with the Service Dealer’s analysis or with the assistance provided, contact us at:

   RLC Customer Care Department
   Toro Warranty Company
   8111 Lyndale Avenue South
   Bloomington, MN 55420-1196
   888-865-5676 (U.S. Customers)
   888-865-5691 (Canada customers)

Owner Responsibilities

You must maintain your Toro Product by following the maintenance procedures described in the *Operator's Manual*. Such routine maintenance, whether performed by a dealer or by you, is at your expense.

Items and Conditions Not Covered

There is no other express warranty except for special emission system and engine warranty coverage on some products. This express warranty does not cover the following:

- Cost of regular maintenance service or wear parts, such as filters, fuel, lubricants, tune-up parts, blade sharpening, brake and clutch adjustments.
- Any product or part which has been altered or misused and requires replacement or repair due to normal wear, accidents, or lack of proper maintenance.
- Repairs necessary due to improper fuel, contaminants in the fuel system, or failure to properly prepare the fuel system prior to any period of non-use over three months.
- Pickup and delivery charges.

General Conditions

All repairs covered by these warranties must be performed by an Authorized Toro Service Dealer using Toro approved replacement parts.

Neither The Toro Company nor Toro Warranty Company is liable for indirect, incidental or consequential damages in connection with the use of the Toro Products covered by this warranty, including any cost or expense of providing substitute equipment or service during reasonable periods of malfunction or non-use pending completion of repairs under this warranty.

All implied warranties of merchantability (that the product is fit for ordinary use) and fitness for use (that the product is fit for a particular purpose) are limited to the duration of the express warranty

Some states do not allow exclusions of incidental or consequential damages, or limitations on how long an implied warranty lasts, so the above exclusions and limitations may not apply to you.

This warranty gives you specific legal rights, and you may also have other rights which vary from state to state.

Countries Other than the United States or Canada

Customers who have purchased Toro products outside the United States or Canada should contact their Toro Distributor (Dealer) to obtain guarantee policies for your country, province, or state. If for any reason you are dissatisfied with your Distributor's service or have difficulty obtaining guarantee information, contact the Toro importer. If all other remedies fail, you may contact us at Toro Warranty Company.